L9 23/09

The following are true

① (C,A) observable $\Leftrightarrow$ rank $\begin{bmatrix} A-\lambda I \\ C \end{bmatrix} = n \quad \forall \lambda \in \mathbb{C}$. (PBH test)

② (C,A) observable $\Leftrightarrow$ eigenvalues of $(A+LC)$ being freely assignable with the help of L.

③ $\mathcal{N}_{CA}$ is A-invariant

④ $\exists\, T \in \mathbb{R}^{n\times n}$ such that $T^{-1}AT = \begin{bmatrix} \tilde{A}_{11} & 0 \\ \tilde{A}_{21} & \tilde{A}_{22} \end{bmatrix}$ and $CT = \begin{bmatrix} \tilde{C}_1 & 0 \end{bmatrix}$ & $(\tilde{C}_1, \tilde{A}_{11})$ is observable.

⑤ $\tilde{A}_{22}$ is Hurwitz $\Leftrightarrow$ rank $\begin{bmatrix} A-\lambda I \\ C \end{bmatrix} = n$ $\forall \underline{\lambda} \in \mathbb{C}^+$.

Detectable

Transformation:- (Observability form) $x(t) = T\hat{x}(t)$

$$\begin{bmatrix} \dot{\hat{x}}_1(t) \\ \dot{\hat{x}}_2(t) \end{bmatrix} = \begin{bmatrix} \tilde{A}_{11} & 0 \\ \tilde{A}_{21} & \tilde{A}_{22} \end{bmatrix} \begin{bmatrix} \hat{x}_1(t) \\ \hat{x}_2(t) \end{bmatrix} + \begin{bmatrix} \tilde{B}_1 \\ \tilde{B}_2 \end{bmatrix} u$$

$$y = \begin{bmatrix} \tilde{C}_1 & 0 \end{bmatrix} \begin{bmatrix} \hat{x}_1(t) \\ \hat{x}_2(t) \end{bmatrix} \Rightarrow y = \tilde{C}_1 \hat{x}_1(t)$$

Suppose $u(t) = 0$

$$\dot{\hat{x}}_1(t) = \tilde{A}_{11}\hat{x}_1(t) \leftarrow e^{\tilde{A}_{11}t}\hat{x}_1(0) \qquad y = \tilde{C}_1\hat{x}_1(t)$$

$$\dot{\hat{x}}_2(t) = \tilde{A}_{21}\hat{x}_1(t) + \tilde{A}_{22}\hat{x}_2(t)$$

$$x_0 = \begin{pmatrix} \hat{x}_1(0) \\ \hat{x}_2(0) \end{pmatrix} = \begin{pmatrix} 0 \\ \alpha \end{pmatrix}$$

$$\hat{x}_1(t) = 0 \qquad \underline{\underline{y = 0}}$$

$$\dot{\hat{x}}_2(t) = \tilde{A}_{22}\hat{x}_2(t)$$

$$\Downarrow$$

$$\hat{x}_2(t) = \underline{\underline{e^{\tilde{A}_{22}t}\hat{x}_2(0)}}$$

$$\begin{pmatrix} 0 \\ \boxed{e^{\tilde{A}_{22}t}\hat{x}_2(0)} \end{pmatrix} \qquad y = 0$$

$$\lim_{t\to\infty} x(t) = \lim_{t\to\infty} T\hat{x}(t) = \lim_{t\to\infty} T\begin{bmatrix} \hat{x}_1(t) \\ \hat{x}_2(t) \end{bmatrix} = T \lim_{t\to\infty} \begin{bmatrix} 0 \\ \hat{x}_2(t) \end{bmatrix} = 0 \qquad \sigma(\tilde{A}_{22}) \cap \mathbb{C}^+ = \underline{\phi}$$

If $\sigma(\tilde{A}_{22}) \cap \mathbb{C}^+ \neq \phi$ then $\exists$ initial condition $\tilde{x}_2(0)$ such that o/p is zero but the states blow up.

$\sigma(\tilde{A}_{22}) \cap \mathbb{C}^+ = \phi \Rightarrow$ Detectibility

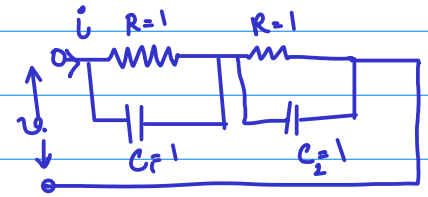

$$C_1 \frac{dv_{c_1}}{dt} + \frac{v_{c_1}}{R} = i \Rightarrow \frac{dv_{c_1}}{dt} = -v_c + i$$

$$C_2 \frac{dv_{c_2}}{dt} + \frac{v_{c_2}}{R} \Rightarrow \frac{dv_{c_2}}{dt} = -v_{c_2} + i$$

$\underline{\underline{v_{c_1}}}$ & $\underline{\underline{v_{c_2}}}$

$v_{c_1}(0)$
$v_{c_2}(0)$

$$\frac{d}{dt}\begin{bmatrix} v_{c_1} \\ v_{c_2} \end{bmatrix} = \begin{bmatrix} -1 & 0 \\ 0 & -1 \end{bmatrix}\begin{bmatrix} v_{c_1} \\ v_{c_2} \end{bmatrix} + \begin{bmatrix} 1 \\ 1 \end{bmatrix} i$$

$$y = v_{c_1} = \begin{bmatrix} 1 & 0 \end{bmatrix}\begin{bmatrix} v_{c_1} \\ v_{c_2} \end{bmatrix}$$

$$\mathcal{O}_{CA} = \begin{bmatrix} C \\ CA \end{bmatrix} \qquad \text{rank}\left(\begin{bmatrix} 1 & 0 \\ -1 & 0 \end{bmatrix}\right) = 1$$

Unobserable.

$$\text{rank}(\mathcal{O}_{CA}) = \text{rank}\left(\begin{bmatrix} 1 & 0 \\ -1 & -2 \end{bmatrix}\right) = 2$$

$$y = \begin{bmatrix} 1 & 2 \end{bmatrix}\begin{bmatrix} v_{c_1} \\ v_{c_2} \end{bmatrix}$$

$$\begin{bmatrix} v_{c_1}(0) \\ v_{c_2}(0) \end{bmatrix}$$

$$= \begin{bmatrix} 1 & 0 \\ 0 & 1 \end{bmatrix}\begin{bmatrix} v_{c_1} \\ v_{c_2} \end{bmatrix}$$

$$\begin{bmatrix} 1 & 1 \end{bmatrix}\begin{bmatrix} v_{c_1} \\ v_{c_2} \end{bmatrix}$$

Observer:

An observer exists if & only if (C, A) is detectable. Furthermore, in that case one such observer is

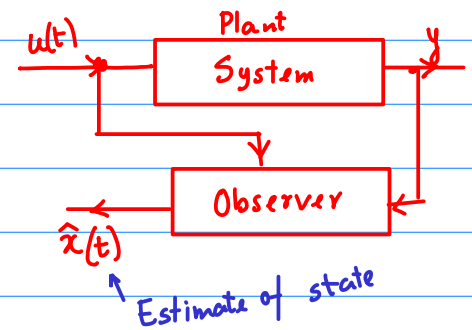

$$\begin{cases} \dot{q}(t) = Aq(t) + Bu(t) + \boxed{L}(\hat{y}(t) - y(t)) \\ \hat{y}(t) = Cq(t) + Du(t) \\ \hat{x}(t) = q(t) \end{cases}$$

$\sigma(A+LC) \rightarrow$ Hurwitz

$$\lim_{t \to \infty} \underbrace{x(t) - \hat{x}(t)}_{e(t)} = 0$$

Proof: (C,A) not detectable $\Rightarrow$ No observer exists

$$\lim_{t\to\infty} \underbrace{x(t)-\hat{x}(t)}_{e(t)} \neq 0$$

Observer exists $\Rightarrow$ (C,A) detectable

W.L.O.G

$$A = \begin{bmatrix} A_{11} & 0 \\ A_{12} & A_{22} \end{bmatrix} \qquad C = \begin{bmatrix} C_1 & 0 \end{bmatrix}$$

$$\frac{d}{dt}\begin{bmatrix} x_1(t) \\ x_2(t) \end{bmatrix} = \begin{bmatrix} A_{11} & 0 \\ A_{12} & A_{22} \end{bmatrix}\begin{bmatrix} x_1(t) \\ x_2(t) \end{bmatrix} + \begin{bmatrix} B_1 \\ B_2 \end{bmatrix} u \qquad y = C_1 x_1(t)$$

$$x(0) = \begin{pmatrix} x_1(0) \\ x_2(0) \end{pmatrix} \begin{matrix} \leftarrow 0 \\ \leftarrow * \end{matrix}$$

$$x(t) = \begin{pmatrix} x_1(t) \\ x_2(t) \end{pmatrix} \rightarrow 0$$

$$\begin{cases} x_1(0) = 0 \\ u(t) = 0 \end{cases} \qquad \dot{x}_2(t) = A_{22}\, x_2(t) \qquad y(t) = 0$$

$\sigma(A_{22}) \cap \mathbb{C}^+ \neq \emptyset$ $\qquad \Downarrow$ trajectories $x_2(t)$ will blow up

$$\dot{q}(t) = Aq(t) + L\,\hat{y}(t) \Rightarrow \dot{q}(t) = (A+LC)q(t) \Rightarrow q(t) = e^{(A+LC)}q(0)$$

$$\hat{y}(t) = Cq(t)$$

$$\hat{x}(t) = q(t)$$

If $q(0) = 0 \Rightarrow q(t) = 0 \Rightarrow \hat{x}(t) = 0$

$$\lim_{t\to\infty}\left[\hat{x}(t) - x(t)\right]$$

(C,A) is detectable $\Rightarrow$ Observer exists

$$\dot{\hat{x}}(t) = A\hat{x}(t) + Bu(t) + L\left(\hat{y}(t) - y(t)\right)$$

$$\hat{y}(t) = C\hat{x}(t) + Du(t)$$

$$\dot{\hat{x}}(t) = A\hat{x}(t) + Bu(t) + L\left(C\hat{x}(t) + Du(t) - Cx - Du\right)$$

$$\dot{x}(t) = Ax(t) + Bu(t)$$

$$\dot{\hat{x}}(t) - \dot{x}(t) = A(\hat{x} - x) + LC(\hat{x} - x)$$

$$\Rightarrow \dot{e}(t) = Ae + LCe \Rightarrow \dot{e}(t) = (A+LC)e(t)$$

If L is chosen such ~~a~~ way that $\sigma(A+LC) \cap \mathbb{C}^+ = \emptyset$

$$\lim_{t\to\infty} e(t) = 0$$

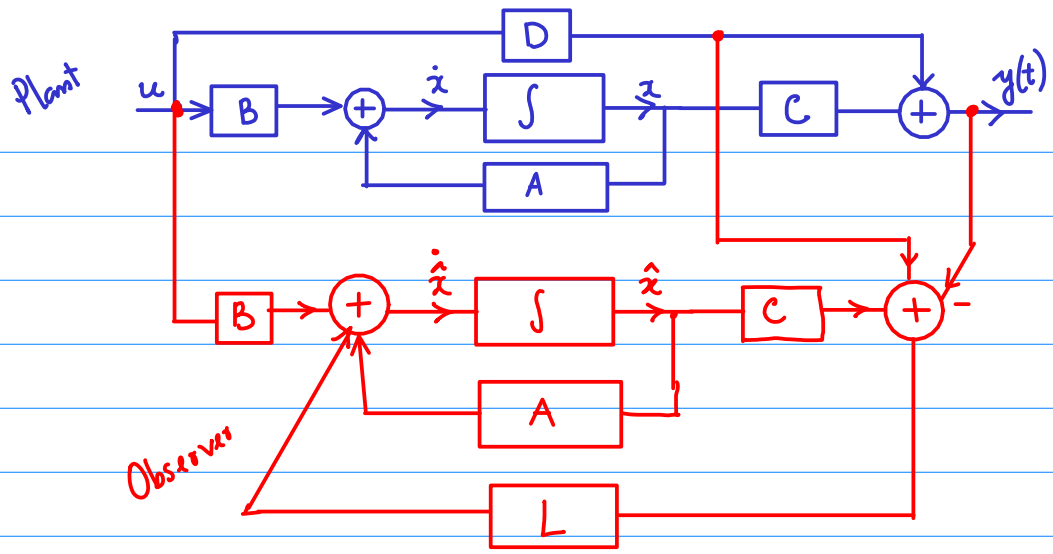

$$\dot{q}(t) = Aq(t) + Bu(t) + L(\hat{y}(t) - y(t))$$
$$\hat{y}(t) = Cq(t) + Du(t)$$
$$\hat{x}(t) = q(t)$$

$$\dot{q}(t) = Aq(t) + Bu(t) + L(\hat{y}(t) - y(t))$$
$$\hat{y}(t) = Cq(t) + Du(t)$$
$$\hat{x}(t) = q(t)$$

$u(t) = F\hat{x}(t)$

* Controller design
$u = Fx$

* Observers
$0 = \lim_{t\to\infty}(\hat{x} - x)$

$\hat{x}$

When the states are not available for feedback design

$$\dot{\hat{x}}(t) = A\hat{x}(t) + Bu(t) + L(\hat{y}(t) - y(t))$$
$$\hat{y}(t) = C\hat{x}(t) + Du(t)$$

$u = F\hat{x}$

$$\dot{\hat{x}} = A\hat{x} + BF\hat{x} + L(C\hat{x} + \cancel{DF\hat{x}} - Cx - \cancel{DF\hat{x}})$$

$$\Rightarrow \dot{\hat{x}} = -LCx + (A + BF + LC)\hat{x}$$

$$* \quad \dot{x} = Ax + Bu = Ax + BF\hat{x}$$

$u = F\hat{x}$

$$\begin{bmatrix} \dot{x} \\ \dot{\hat{x}} \end{bmatrix} = \begin{bmatrix} A & BF \\ -LC & A+BF+LC \end{bmatrix} \begin{bmatrix} x \\ \hat{x} \end{bmatrix} \rightarrow \begin{bmatrix} \overset{e}{\dot{x} - \dot{\hat{x}}} \\ \dot{\hat{x}} \end{bmatrix} = \left[\begin{array}{c|c} A+LC & 0 \\ \hline -LC & A+BF \end{array}\right] \begin{bmatrix} x - \hat{x} \\ \hat{x} \end{bmatrix}$$