L34

12/11/2020

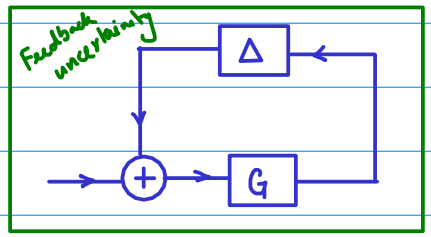

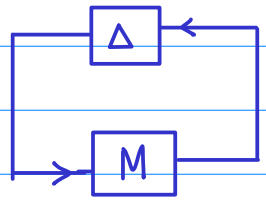

M-Δ structure

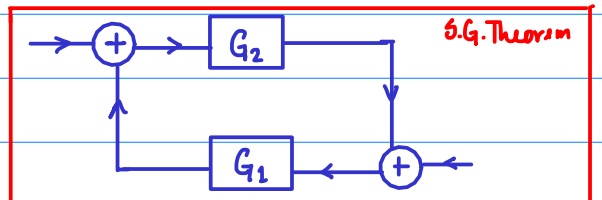

If $\|G_1\|_\infty < \gamma$ where $\gamma > 0$ then the system is internally stable for all $G_2 \in RH_\infty$ if and only if $\|G_2\|_\infty < 1/\gamma$

Q: Does $\hat{K}$ internally stabilize Π?

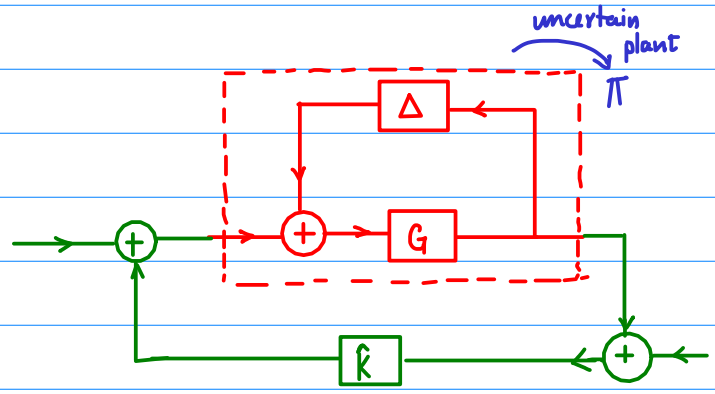

$P \in \Pi$

Π = Set of all uncertain models with nominal plant G

Given the description of an uncertainity model set Π and a set of performance objectives, suppose $P \in \Pi$ is the nominal design model and $\hat{K}$ is the resulting controller. Then the closed loop system is said to have

① Nominal Stability (NS): If $\hat{K}$ internally stabilizes $\underline{P}$. $\begin{bmatrix} I & -\hat{K} \\ -P & I \end{bmatrix}^{-1} \in RH_\infty$

② Robust Stability (RS): If $\hat{K}$ internally stabilizes <u>every plant</u> in Π

Internal stability

$\underbrace{\begin{bmatrix} I & -\hat{K} \\ -P & I \end{bmatrix}^{-1} \in RH_\infty}$

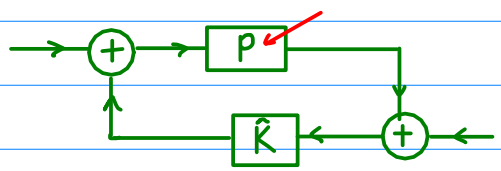

(Nominal stability) ✓

Robust stability $\Longleftrightarrow$ $\underbrace{\begin{bmatrix} I & -\hat{K} \\ -\Pi & I \end{bmatrix}^{-1} \in RH_\infty}$ $\forall\, \Pi \in \mathbb{\Pi}$

set of all uncertain plants

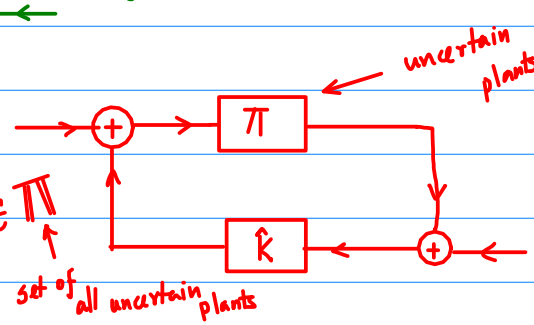

Additive uncertainity

$P + W_1 \Delta W_2 \qquad \Delta \in RH_\infty,\ W_1 \in RH_\infty,\ W_2 \in RH_\infty$

What is the condition of robust stability given $\|\Delta\|_\infty < 1$?

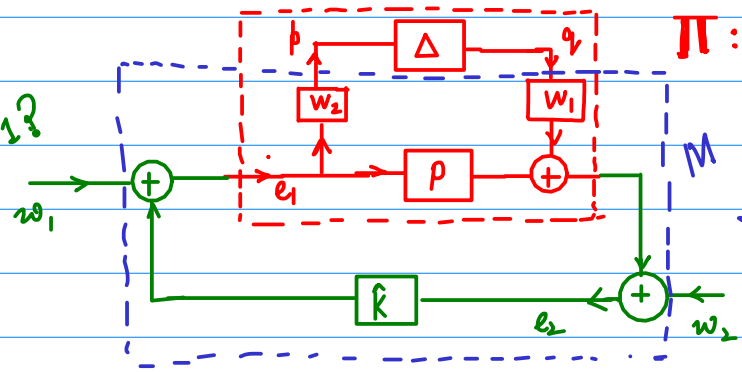

$\Pi := \{ P + W_1 \Delta W_2 \mid \Delta, W_1, W_2 \in RH_\infty \}$

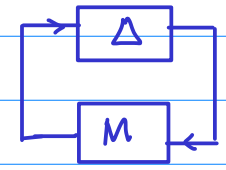

$(w_1 = 0,\ w_2 = 0)$

$p = W_2 e_1 = W_2 \hat{K} e_2 \rightarrow (I)$

$e_2 = P e_1 + W_1 q$

$\Rightarrow e_2 = P\hat{K} e_2 + W_1 q$

$\Rightarrow e_2 = (I - P\hat{K})^{-1} W_1 q \rightarrow (II)$

(II) & (I) $\Rightarrow$

$$\boxed{p = W_2 \hat{K} (I - P\hat{K})^{-1} W_1 q}$$

$\therefore\ M = W_2 \hat{K} (I - P\hat{K})^{-1} W_1$

Internal stability with $\|\Delta\|_\infty < 1$ if & only if $\|M\|_\infty \leq 1$

$\Downarrow$

$\|W_2 \hat{K} (I - P\hat{K})^{-1} W_1\|_\infty \leq 1$

Theorem: Let $\Pi = \{ P + W_1 \Delta W_2 \mid \Delta \in RH_\infty,\ W_1, W_2 \in RH_\infty \}$ and $\hat{K}$ be a stabilizing controller for the nominal plant P. Then the closed loop system is well-posed & internally stable for all $\|\Delta\|_\infty < 1$ if and only if $\| W_2 \hat{K} S_o W_1 \|_\infty \leq 1$.

$\hat{K}$ is a stabilizing controller of P $\Leftrightarrow$ $\begin{bmatrix} I & -\hat{K} \\ -P & I \end{bmatrix}^{-1} \in RH_\infty$

$$= \begin{bmatrix} I + \hat{K}(I - P\hat{K})^{-1} P & \overset{\hat{K} S_o}{\boxed{\hat{K}(I - P\hat{K})^{-1}}} \\ (I - P\hat{K})^{-1} P & (I - P\hat{K})^{-1} \end{bmatrix} \in RH_\infty$$

$S_o := (I - P\hat{K})^{-1}$ (output sensitivity TM)

$S_i := (I - \hat{K}P)^{-1}$ (input sensitivity TM)

$T_i := I - S_i$ (complementary i/p sensitivity matrix)

$T_o := I - S_o$ (complementary o/p sensitivity matrix)

Multiplicative Uncertainity:

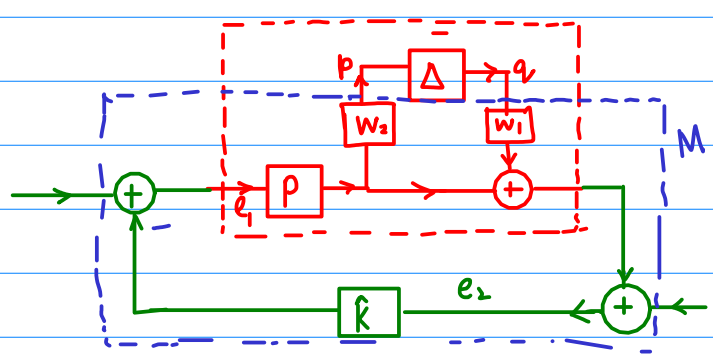

$\Pi := \{ (I + W_1 \Delta W_2) G \mid \Delta, W_1, W_2 \in RH_\infty \}$

$p = W_2 P e_1 = W_2 P \hat{K} e_2$ $\qquad$ $e_2 = P e_1 + W_1 q \Rightarrow e_2 = (I - P\hat{K})^{-1} W_1 q$

$$\Rightarrow p = \underbrace{W_2 P \hat{K} (I - P\hat{K})^{-1} W_1}_{M} q = -W_2 T_o W_1 q$$

$$T_o = I - S_o$$
$$= I - (I - P\hat{K})^{-1}$$
$$= I - \{I + P(I - \hat{K}P)^{-1}\hat{K}\}$$
$$= -P(I - \hat{K}P)^{-1}\hat{K}$$
$$= \underbrace{-P\hat{K}(I - P\hat{K})^{-1}}$$

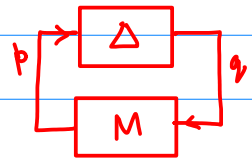

$M = -W_2 T_o W_1$

Theorem: Let $\Pi = \{(I + W_1 \Delta W_2)P \mid \Delta \in \mathcal{RH}_\infty, W_1 \in \mathcal{RH}_\infty, W_2 \in \mathcal{RH}_\infty\}$ and let $\hat{K}$ be a stabilizing controller for the nominal plant P. Then the closed loop system is well-posed & internally stable $\forall\, \Delta \in \mathcal{RH}_\infty$ if and only if $\| W_2 T_o W_1 \|_\infty \leq 1$.

Given NS & $\hat{K}$ Perturbed model set then closed loop robust stability if and only if robust stability tests

$W_1 \in \mathcal{RH}_\infty$ $\quad W_2 \in \mathcal{RH}_\infty$ $\quad \Delta \in \mathcal{RH}_\infty$ $\quad \|\Delta\|_\infty < 1$		
Perturbed Model Sets Π	Representative Types of Uncertainty Characterized	Robust Stability Tests
$(I + W_1 \Delta W_2)P$	output (sensor) errors neglected HF dynamics uncertain rhp zeros	$\|W_2 T_o W_1\|_\infty \leq 1$
$P(I + W_1 \Delta W_2)$	input (actuators) errors neglected HF dynamics uncertain rhp zeros	$\|W_2 T_i W_1\|_\infty \leq 1$
$(I + W_1 \Delta W_2)^{-1} P$	LF parameter errors uncertain rhp poles	$\|W_2 S_o W_1\|_\infty \leq 1$
$P(I + W_1 \Delta W_2)^{-1}$	LF parameter errors uncertain rhp poles	$\|W_2 S_i W_1\|_\infty \leq 1$
$P + W_1 \Delta W_2$	additive plant errors neglected HF dynamics uncertain rhp zeros	$\|W_2 K S_o W_1\|_\infty \leq 1$
$P(I + W_1 \Delta W_2 P)^{-1}$	LF parameter errors uncertain rhp poles	$\|W_2 S_o P W_1\|_\infty \leq 1$

e.g. $P_\Delta = \left\{ \frac{1}{s - \delta} \;\middle|\; \delta \in \mathbb{R} \quad |\delta| \leq 1 \right\}$ $\qquad \boxed{\delta = 0, \quad P = 1/s}$

$\delta = -1, \quad P_\Delta = \frac{1}{s+1}$ $\qquad \delta = 1, \quad P_\Delta = \frac{1}{s-1}$ $\qquad \Pi = \{ P(1 + \delta P)^{-1} \mid \delta \in \mathcal{RH}_\infty, \|\delta\|_\infty \leq 1 \}$

$\rightarrow P_\Delta = \frac{s + 1 + \alpha}{(s+1)(s+2)} \qquad |\alpha| \leq 2$ $\qquad \alpha = -2, \ \delta = -1 \ \Rightarrow P_\Delta = \frac{(s-1)}{(s+1)(s+2)}$ $\qquad$ #rhp zeros

$P_\Delta = \left\{ \frac{1}{(s+2)} \times \left(1 + \frac{2\delta}{s+1}\right) \;\middle|\; \delta \in \mathcal{RH}_\infty, \|\delta\|_\infty \leq 1 \right\}$ $\qquad \alpha = 2, \ \delta = 1, \ P_\Delta = \frac{s+3}{(s+1)(s+2)}$