EE656: Robust Control
Assignment 3
Model Answer

1. Prove or disprove the following

   (a) If $A > 0$, then $\texttt{spec}(A) \cap \mathbb{C}^- = \phi$.
   Solution: True: Let λ be an eigenvalue of A and x be a corresponding eigenvector. Then

   $$Ax = \lambda x \Rightarrow x^T Ax = \lambda x^T x \Rightarrow \lambda = \frac{x^T Ax}{x^T x}.$$

   Since $A > 0$, $x^T Ax > 0$. Further, $x^T x = \|x\|_2 > 0$, since x is non-zero. Therefore, $\frac{x^T Ax}{x^T x} > 0 \Rightarrow \lambda > 0$.

   (b) $BB^T > 0$ for any $B \in \mathbb{R}^{\mathtt{n}\times\mathtt{m}}$.
   Solution: False: Let $B = \begin{bmatrix} 0 \\ 1 \end{bmatrix}$. Then $BB^T = \begin{bmatrix} 0 & 0 \\ 0 & 1 \end{bmatrix} \geqslant 0$ (It is semi-definite not definite).

   (c) If $\lambda \in \texttt{spec}(H)$, then $-\lambda \in \texttt{spec}(H)$, where H is a Hamiltonian matrix.
   Solution: A Hamiltonian matrix $H = \begin{bmatrix} A & M \\ -Q & -A^T \end{bmatrix}$. Define $J := \begin{bmatrix} 0 & -I \\ I & 0 \end{bmatrix}$. Check that $J^{-1}HJ = -H^T$ (Similarity transform). This means that the eigenvalues of H and $-H^T$ are the same. Therefore, If $\lambda \in \texttt{spec}(H)$, then $-\lambda \in \texttt{spec}(H)$ ($-\lambda \in \texttt{spec}(-H^T)$)

2. Consider the electrical network shown in Figure 1. Consider (i_1, i_2) to be the states of

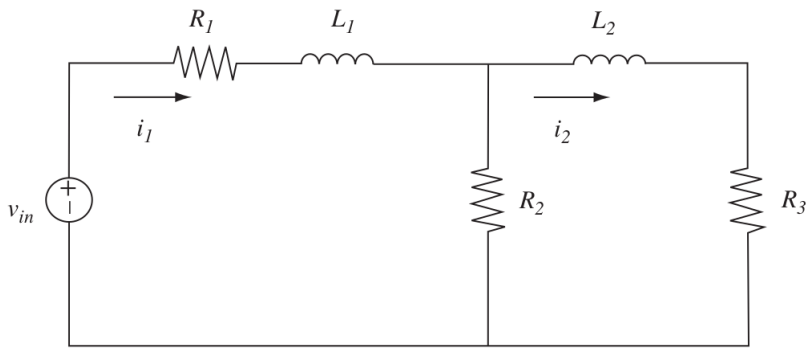

Figure 1: An RL circuit

the system and the corresponding state-space equation is $\frac{d}{dt}x = Ax + Bu$. If we consider that atmost one of the passive components in the network is uncertain, then find the components which lead to matched uncertainty.

`Uncertainty of a system matrix is said to be matched, if it belongs to the image of the input matrix` B.

Solution: Applying Kirchhoff's voltage law to the two meshes, We have

$$v_{in} = R_1 i_1 + L_1 \frac{\mathrm{d}i_1}{\mathrm{d}t} + R_2 (i_1 - i_2)$$
$$R_2 (i_1 - i_2) = L_2 \frac{\mathrm{d}i_2}{\mathrm{d}t} + R_3 i_2$$

Defining state variables to be i_1 and i_2, we obtain the following state equations:

$$\begin{bmatrix} i_1 \\ i_2 \end{bmatrix} = \begin{bmatrix} -(R_1 + R_2)/L_1 & R_2/L_1 \\ R_2/L_2 & -(R_2 + R_3)/L_2 \end{bmatrix} \begin{bmatrix} i_1 \\ i_2 \end{bmatrix} + \begin{bmatrix} 1/L_1 \\ 0 \end{bmatrix} \nu_{in}$$

Uncertainity in R_1: If R_1 is uncertain, then the difference of A between the actual value R_1 and the nominal value R_{1o}, called the uncertainty in A, can be expresses as

$$\begin{aligned} & A(R_1) - A(R_{1o}) \\ &= \begin{bmatrix} -(R_1 + R_2)/L_1 & R_2/L_1 \\ R_2/L_2 & -(R_2 + R_3)/L_2 \end{bmatrix} - \begin{bmatrix} -(R_{1o} + R_2)/L_1 & R_2/L_1 \\ R_2/L_2 & -(R_2 + R_3)/L_2 \end{bmatrix} \\ &= \begin{bmatrix} -\Delta R_1/L_1 & 0 \\ 0 & 0 \end{bmatrix} = \begin{bmatrix} 1/L_1 \\ 0 \end{bmatrix} \begin{bmatrix} -\Delta R_1 & 0 \end{bmatrix} \end{aligned}$$

where $\Delta R_1 := R_1 - R_{1o}$, is the deviation of R_1 from its nominal value. Note that for R_1, the uncertainty is in the range of B (that is, the uncertainty can be written in the form $B\phi(R_1)$ for some $\phi(R_1)$). So, we have matching.

Uncertainity in R_2: If R_2 is uncertain, then the uncertainty in A is

$$\begin{aligned} & A(R_2) - A(R_{2o}) \\ &= \begin{bmatrix} -(R_1 + R_2)/L_1 & R_2/L_1 \\ R_2/L_2 & -(R_2 + R_3)/L_2 \end{bmatrix} - \begin{bmatrix} -(R_1 + R_{2o})/L_1 & R_{2o}/L_1 \\ R_{2o}/L_2 & -(R_{2o} + R_3)/L_2 \end{bmatrix} \\ &= \begin{bmatrix} -\Delta R_2/L_1 & \Delta R_2/L_1 \\ \Delta R_2/L_2 & -\Delta R_2/L_2 \end{bmatrix} \end{aligned}$$

Where $\Delta R_2 := R_2 - R_{2o}$. Note that for R_2, the uncertainty is not in the range of B, that is, the matching condition is not satisfied.

Uncertainity in R_3: If R_3 is uncertain, then the uncertainty in A is

$$\begin{aligned} & A(R_3) - A(R_{3o}) \\ &= \begin{bmatrix} -(R_1 + R_2)/L_1 & R_2/L_1 \\ R_2/L_2 & -(R_2 + R_3)/L_2 \end{bmatrix} - \begin{bmatrix} -(R_1 + R_2)/L_1 & R_2/L_1 \\ R_2/L_2 & -(R_2 + R_{3o})/L_2 \end{bmatrix} \\ &= \begin{bmatrix} 0_1 & 0 \\ 0_1 & -\Delta R_3/L_2 \end{bmatrix} \end{aligned}$$

Where $\Delta R_3 = R_3 - R_{3o}$. Note that for R_3, the uncertainty is totally unmatched.

Uncertainity in L_1: If L_1 is uncertain, then the uncertainty in A is

$$\begin{aligned}
&A(L_1) - A(L_{1o}) \\
&= \begin{bmatrix} -(R_1+R_2)/L_1 & R_2/L_1 \\ R_2/L_2 & -(R_2+R_3)/L_2 \end{bmatrix} - \begin{bmatrix} -(R_1+R_2)/L_{1o} & R_2/L_{1o} \\ R_2/L_2 & -(R_2+R_3)/L_2 \end{bmatrix} \\
&= \begin{bmatrix} -(R_1+R_2)\Delta L_1 & R_2\Delta L_1 \\ 0 & 0 \end{bmatrix} \\
&= \begin{bmatrix} 1/L_1 \\ 0 \end{bmatrix} \begin{bmatrix} -(R_1+R_2)L_1\Delta L_1 & R_2 L_1 \Delta L_1 \end{bmatrix}
\end{aligned}$$

Here $\Delta L_1 := 1/L_1 - 1/L_{1o}$. Note that for L_1, the uncertainty in A is in the range of B (matched uncertainty).

Uncertainity in L_2: If L_2 is uncertain, then the uncertainty in A is

$$\begin{aligned}
&A(L_2) - A(L_{2o}) \\
&= \begin{bmatrix} -(R_1+R_2)/L_1 & R_2/L_1 \\ R_2/L_2 & -(R_2+R_3)/L_2 \end{bmatrix} - \begin{bmatrix} -(R_1+R_2)/L_1 & R_2/L_1 \\ R_2/L_{2o} & -(R_2+R_3)/L_{2o} \end{bmatrix} \\
&= \begin{bmatrix} 0 & 0 \\ R_2\Delta L_2 & -(R_2+R_3)\Delta L_2 \end{bmatrix}
\end{aligned}$$

Where $\Delta L_2 := 1/L_2 - 1/L_{2o}$. Note that for L_2, the uncertainty in A is totally unmatched.

3. Consider the transfer function

$$G(s) = \frac{s^3 - 8s^2 - 37s - 30}{s^3 + 6s^2 + 11s + 6}$$

Using the bisection method (algo. taught in class) calculate $\|G(s)\|_\infty$ (tolerance 1%).

Solution:

$$G(s) = \frac{s^3 - 8s^2 - 37s - 30}{s^3 + 6s^2 + 11s + 6}$$

From Gilbert's method, the realization of $G(s)$ is

$$A = \begin{bmatrix} -1 & 0 & 0 \\ 0 & -2 & 0 \\ 0 & 0 & -3 \end{bmatrix} \quad B = \begin{bmatrix} 1 \\ 2 \\ 3 \end{bmatrix}$$
$$C = \begin{bmatrix} -1 & -2 & -3 \end{bmatrix} \quad D = 1$$

Let $\bar{\gamma} = 10$ and $\underline{\gamma} = 1$. Then $\gamma = (\bar{\gamma} - \underline{\gamma})/2 = 5.5, V = \gamma^2 I - D^T D = 29.25$ and

$$\Lambda = \begin{bmatrix} A + BV^{-1}D^{\mathrm{T}}C & BV^{-1}B^{\mathrm{T}} \\ -C^T\left(I + DV^{-1}D^{\mathrm{T}}\right)C & -\left(A + BV^{-1}D^{\mathrm{T}}\mathrm{C}\right)^{\mathrm{T}} \end{bmatrix}$$

has eigenvalues

$$\lambda(\Lambda) = \{-2.6443, -1.5428, -0.6231, 2.6443, 0.6231, 1.5428\}$$

since no eigenvalue is on the imaginary axis, the new upper bound is $\bar{\gamma} = \gamma = 5.5$

Next, let $\gamma = (\bar{\gamma} - \underline{\gamma})/2 = 3.25$. We find the following eigenvalues

$$\lambda(\Lambda) = \{j2.5268, -j2.5268, -2.4491, -1.1914, 2.4491, 1.1914\}$$

since there are two eigenvalues on the imaginary axis, the new lower bound is $\underline{\gamma} = \gamma = 3.25$. This process can continue until we find $\|G\|_\infty$ with tolerance 1%.

4. Given $G(s) = \left[\begin{array}{c|c} A & B \\ \hline C & D \end{array}\right]$. Find Δ such that the transfer matrix from input to output in Figure 2 is given by $G(s)$.

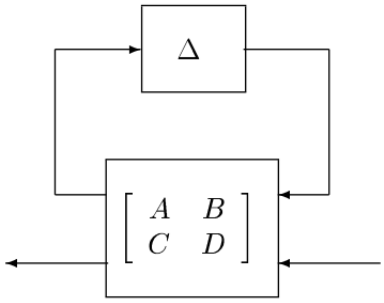

Figure 2: Figure for Q4

Solution: $G(s) = D + C(sI - A)^{-1}B = D + C\frac{1}{s}(I - A\frac{1}{s})^{-1}B$. Comparing it with $\mathcal{F}_u(P, K) := P_{22} + P_{21}\Delta(I - P_{11}\Delta)^{-1}P_{12}$, where $P = \begin{bmatrix} P_{11} & P_{12} \\ P_{21} & P_{22} \end{bmatrix}$. $\Delta = \mathcal{F}_u\left(\begin{bmatrix} A & B \\ C & D \end{bmatrix}, \frac{1}{s}I\right)$.

5. Consider the Algebraic Riccati equation $A^*X + XA + XRX + Q = 0$ and let H be the corresponding Hamiltonian matrix. Show that $\texttt{spec}(H) = \texttt{spec}(A + RX) \cup \texttt{spec}(-A^* - XR)$.

Solution: A Hamiltonian matrix is a real matrix of the form

$$H = \begin{bmatrix} A & R \\ -Q & -A^* \end{bmatrix},$$

where Q and R are $n \times n$ symmetric matrices, and A is also in $\mathbb{R}^{n\times n}$.

Define the matrix $L := \begin{bmatrix} I & 0 \\ X & I \end{bmatrix}$. Clearly, L is non-singular and $L^{-1} = \begin{bmatrix} I & 0 \\ -X & I \end{bmatrix}$. Now we show that $L^{-1}HL$ is a block diagonal matrix.

$$\begin{bmatrix} I & 0 \\ -X & I \end{bmatrix}\begin{bmatrix} A & R \\ -Q & -A^* \end{bmatrix}\begin{bmatrix} I & 0 \\ X & I \end{bmatrix} = \begin{bmatrix} A + RX & R \\ 0 & -A^* - XR \end{bmatrix} \tag{1}$$

Similarity transform do not change the eigenvalues of a matrix. Hence, $\texttt{spec}(L^{-1}HL) = \texttt{spec}(H)$. Therefore, $\texttt{spec}(H) = \texttt{spec}(L^{-1}HL) = \texttt{spec}(A + RX) \cup \texttt{spec}(-A^* - XR)$ (From equation (1)).

6. Consider the following stable system

$$\frac{d}{dt}x = \begin{bmatrix} 0 & 1 & 0 \\ 0 & 0 & 1 \\ -6 + \Delta_1 & -9 + \Delta_2 & -3 + \Delta_3 \end{bmatrix} x + \begin{bmatrix} 0 \\ 0 \\ 1 \end{bmatrix} u, \qquad y = x$$

where Δ_1, Δ_2, and Δ_3 are uncertainities. Find the bound on the uncertainity Δ that guarantees the stability of the system.

Solution: Consider the following system:

$$\dot{x} = \begin{bmatrix} 0 & 1 & 0 \\ 0 & 0 & 1 \\ -6+\Delta_1 & -9+\Delta_2 & -3+\Delta_3 \end{bmatrix} x + \begin{bmatrix} 0 \\ 0 \\ 1 \end{bmatrix} u$$
$$y = x$$

where Δ_1, Δ_2, and Δ_3 are uncertainties. The system can be decomposed as the nominal system (A, B) and the uncertainty Δ. The nominal system is stable. Let $G(s)$ be the transfer function of the nominal system

$$\dot{x} = \begin{bmatrix} 0 & 1 & 0 \\ 0 & 0 & 1 \\ -6 & -9 & -3 \end{bmatrix} x + \begin{bmatrix} 0 \\ 0 \\ 1 \end{bmatrix} u$$
$$y = x$$

Then we can calculate the H_∞ norm using SCILAB[1] and obtain $\|G\|_\infty < 0.4747$. By small gain theorem, we must have $\|\Delta\|_\infty \leqslant \frac{1}{0.4747} = 2.106$ for internal stability (this might be a conservative bound, since the uncertainty is structured).

7. Consider the system

$$F(s) = \left[\begin{array}{rrrr|rr|r} -5 & 2 & -4 & -7 & 0 & 0 & 6 \\ 0 & -3 & 2 & -6 & 5 & -5 & 8 \\ 0 & 7 & -1 & 4 & 0 & 0 & -5 \\ -2 & 3 & 5 & 8 & -2 & 2 & 2 \\ \hline -2 & 9 & 4 & -1 & 0 & 0 & \frac{1}{\sqrt{2}} \\ 2 & -9 & -4 & 1 & 0 & 0 & \frac{1}{\sqrt{2}} \\ \hline 6 & 3 & -1 & 7 & \frac{1}{\sqrt{2}} & \frac{1}{\sqrt{2}} & 0 \end{array}\right] =: \left[\begin{array}{c|cc} A & B_1 & B_2 \\ \hline C_1 & D_{11} & D_{12} \\ C_2 & D_{21} & D_{22} \end{array}\right]$$

Obtain the optimal H_2 controller for the system. What is the optimal H_2 norm that can be attained by this controller?

Solution: Follow the algorithm given in EE656 Controllers.pdf file. The relevant matrices are given in the next page. The controller is given by $K(s) = \left[\begin{array}{c|c} A_K & B_K \\ \hline C_K & 0 \end{array}\right]$, with A_K, B_K, C_K given in the next page.

The optimal $\mathcal{H}_2$-norm of the closed loop system is given by

$$\sqrt{\texttt{trace}(B_1^T X B_1) + \texttt{trace}(D_{12}^T D_{12} F Y F^T)} = 1964.1401.$$

(The square-root is missing in the lecture notes. Please include that as a correction. You will be awarded marks even if your answer is without the square root)

[1] `linf(G)`, where $G = C * (sI - A)^{-1} B$.

```
--> H
 H  =

  -5.    2.    -4.   -7.   -36.  -48.   30.  -12.
   0.   -3.     2.   -6.   -48.  -64.   40.  -16.
   0.    7.    -1.    4.    30.   40.  -25.   10.
  -2.    3.     5.    8.   -12.  -16.   10.  -4.
  -8.    36.    16.  -4.     5.    0.    0.    2.
   36.  -162.  -72.   18.  -2.     3.   -7.   -3.
   16.  -72.   -32.    8.    4.   -2.    1.   -5.
  -4.    18.    8.   -2.     7.    6.   -4.   -8.
```

```
--> J
 J  =

  -5.   0.    0.  -2.   -36.  -18.   6.  -42.
   2.  -3.    7.   3.   -18.  -9.    3.  -21.
  -4.   2.   -1.   5.    6.    3.   -1.   7.
  -7.  -6.    4.   8.   -42.  -21.   7.  -49.
   0.   0.    0.   0.    5.   -2.    4.   7.
   0.  -50.   0.   20.   0.    3.   -2.   6.
   0.   0.    0.   0.    0.   -7.    1.  -4.
   0.   20.   0.  -8.    2.   -3.   -5.  -8.
```

```
--> X
 X  =

   0.9947691  -0.9035811  -3.5985207  -11.717488
  -0.9035811   3.2288194   2.6414795   3.4069289
  -3.5985207   2.6414795   13.61       45.415882
  -11.717488   3.4069289   45.415882   162.87879
```

```
--> Y
 Y  =

   1911.4835   2488.9566   1376.0712  -2491.2026
   2488.9566   3244.0496   1793.0115  -3244.2159
   1376.0712   1793.0115   993.76848  -1792.5748
  -2491.2026  -3244.2159  -1792.5748   3247.2348
```

```
--> F
 F  =

   6.7024072  -14.015529  -22.322475  -55.628674
```

```
--> L
 L  =

  -121.28173
  -163.36566
  -93.669767
   156.64458
```

```
--> AK = A+B2*F + L*C2
 AK  =

  -692.47593  -445.93836  -16.653123  -1189.7441
  -926.57471  -605.22121  -13.214141  -1594.589
  -595.53064  -203.93166   204.28214  -373.545
   951.27229   444.90268  -196.28953   993.25471
```

```
--> BK = -L
 BK  =

   121.28173
   163.36566
   93.669767
  -156.64458
```

```
--> CK = F
 CK  =

   6.7024072  -14.015529  -22.322475  -55.628674
```