L35

17/11/2020

2 i/p, 2 o/p system

(I/p which can't be controlled) e.g. noise, reference signal

(I/p that controller modifies)

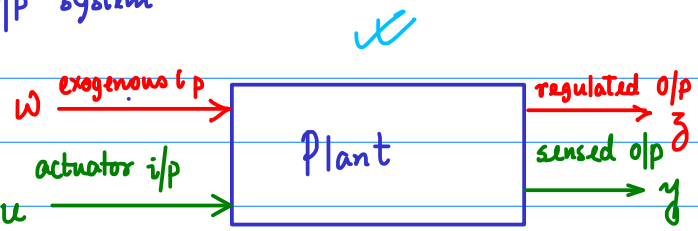

$$\begin{pmatrix} u \\ w \end{pmatrix} \longmapsto \begin{pmatrix} y \\ z \end{pmatrix}$$

Transfer matrix

$$\min \left(\frac{\|z\|}{\|w\|} \right)$$

Strict classification.

Not-strict classification.

e.g

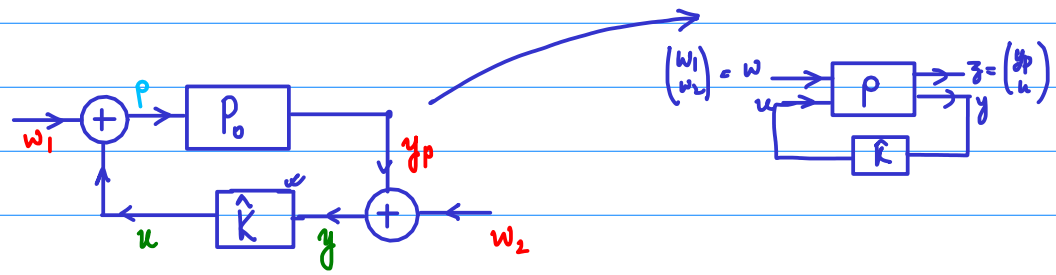

actuator i/p: u

sensed o/p: y

exogenous i/p: $w = \begin{pmatrix} w_1 \\ w_2 \end{pmatrix}$

regulated o/p: $z = \begin{pmatrix} y_p \\ u \end{pmatrix}$

$p = w_1 + u$ $\qquad u = z_2$

$y_p = P_0(w_1 + u) = z_1$

$y = P_0(w_1 + u) + w_2$

I/p $\begin{pmatrix} w_1 \\ w_2 \\ u \end{pmatrix}$

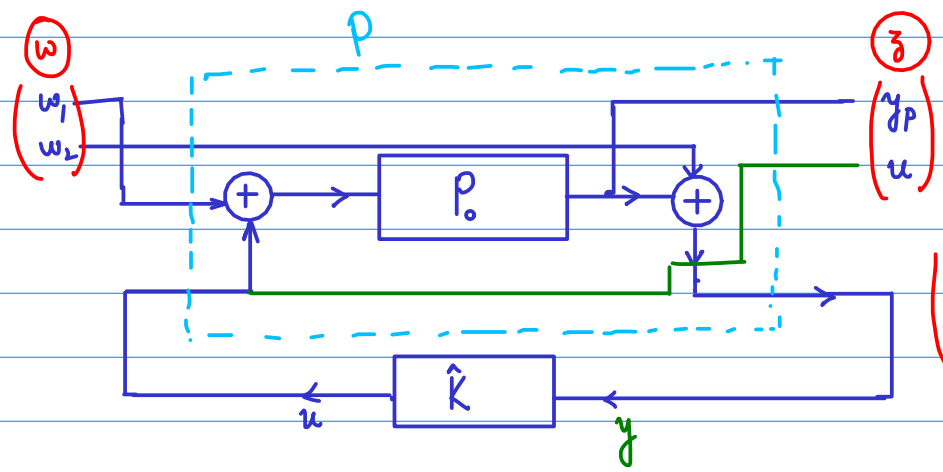

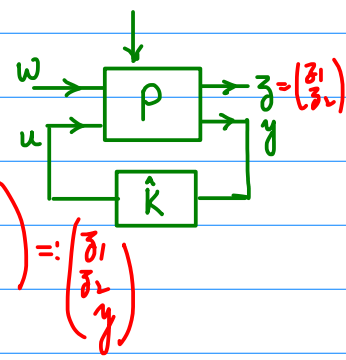

$$\left.\begin{aligned} \dot{x} &= Ax + Bu \\ y &= Cx + Du \end{aligned}\right\} P_0$$

$$\begin{bmatrix} z_1 \\ z_2 \\ y \end{bmatrix} = \left[\begin{array}{cc|c} P_0 & 0 & P_0 \\ 0 & 0 & I \\ \hline P_0 & I & P_0 \end{array}\right] \begin{bmatrix} w_1 \\ w_2 \\ u \end{bmatrix}$$

$$\begin{array}{c|cccc} & & w_1 & w_2 & u \\ \hline \dot{x} & A & B & 0 & B \\ \hline z_1 & C & D & 0 & D \\ z_2 & 0 & 0 & 0 & I \\ y & C & D & I & 0 \end{array} \leftarrow \left.\begin{aligned} \dot{x} &= Ax + B(w_1 + u) \\ z_1 &= Cx + D(w_1 + u) \\ z_2 &= u \\ y &= Cx + Dw_1 + w_2 \end{aligned}\right\}$$

e.g.

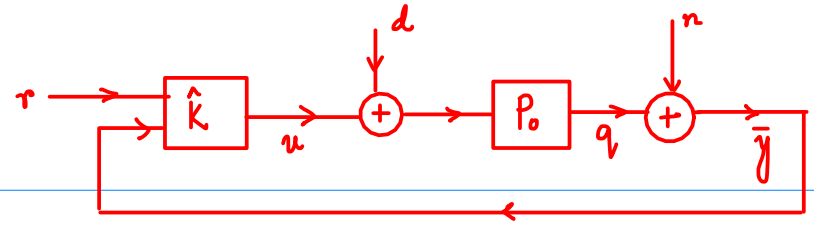

$$w = \begin{bmatrix} r \\ d \\ n \end{bmatrix} \leftarrow \text{Exogenous i/p}$$

$$u = [u] \leftarrow \text{Actuator o/p}$$

$$\begin{bmatrix} q-r \\ u \\ r \\ \bar{y} \end{bmatrix} = \begin{bmatrix} I & -P_0 & 0 & -P_0 \\ 0 & 0 & 0 & I \\ I & 0 & 0 & 0 \\ 0 & P_0 & I & P_0 \end{bmatrix} \begin{bmatrix} r \\ d \\ n \\ u \end{bmatrix}$$

$$z = \begin{bmatrix} q-r \\ u \end{bmatrix} \leftarrow \text{Regulated o/p}$$

$$y = \begin{bmatrix} r \\ \bar{y} \end{bmatrix} \leftarrow \text{Sensor o/p}$$

$$\min_K \left(\frac{\|z\|}{\|w\|} \right)$$

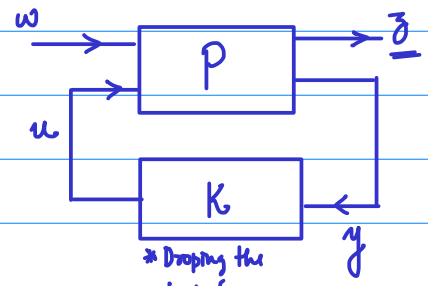

* Droping the hat for convinience

Plant:

$$\begin{bmatrix} z \\ y \end{bmatrix} = \begin{bmatrix} P_{11} & P_{12} \\ P_{21} & P_{22} \end{bmatrix} \begin{bmatrix} w \\ u \end{bmatrix}$$

$$w \longmapsto z$$

$$z = P_{11} w + P_{12} u \Rightarrow z = \left(P_{11} + P_{12} (I - K P_{22})^{-1} K P_{21} \right) w$$

$$y = P_{21} w + P_{22} u$$

$$u = Ky = K(P_{21} w + P_{22} u) \Rightarrow u = (I - K P_{22})^{-1} K P_{21} w$$

map $w \mapsto z$

$$\boxed{z = \left(P_{11} + P_{12} (I - K P_{22})^{-1} K P_{21} \right) w}$$

Linear Fractional Transformation (LFT)
(In particular, lower LFT)

$$\mathcal{F}_\ell(P, K) := P_{11} + P_{12} (I - K P_{22})^{-1} K P_{21} \longleftarrow \text{Lower Star product.}$$

Upper star product $\rightarrow$ $\mathcal{F}_u(P, K) := P_{22} + P_{21} \Delta (I - P_{11} \Delta)^{-1} P_{12}$

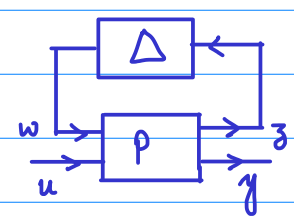

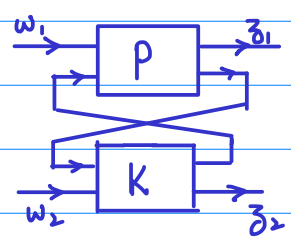

$$\begin{bmatrix} z_1 \\ z_2 \end{bmatrix} = \begin{bmatrix} \mathcal{F}_\ell(P, K_{11}) & P_{12}(I - K_{11} P_{22})^{-1} K_{12} \\ K_{21} (I - P_{22} K_{11})^{-1} P_{21} & \mathcal{F}_u(K, P_{22}) \end{bmatrix} \begin{bmatrix} w_1 \\ w_2 \end{bmatrix}$$

Definition: The interconnection $\tilde{F}_\ell(P, K)$ ($w \to z$) is well-posed if any smooth w and any $x(0)$ and $x_k(0)$, $\exists$ functions x, x_k, u, y, z such that

$$\dot{x} = Ax + B_1 w + B_2 u \qquad \dot{x}_k = A_k x_k + B_k y$$

$$z = C_1 x + D_{11} w + D_{12} u \qquad u = C_k x_k + D_k y$$

$$y = C_2 x + D_{21} w + D_{22} u$$

$$\begin{bmatrix} \dot{x} \\ \dot{x}_k \end{bmatrix} = \begin{bmatrix} A & 0 \\ 0 & A_k \end{bmatrix} \begin{bmatrix} x \\ x_k \end{bmatrix} + \begin{bmatrix} B & 0 \\ 0 & B_k \end{bmatrix} \begin{bmatrix} u \\ y \end{bmatrix} + \begin{bmatrix} B_1 \\ 0 \end{bmatrix} w$$

$$u = C_k x_k + D_k y$$

$$y = D_{22} u + D_{21} w + C_2 x$$

$$z = \begin{bmatrix} C_1 & 0 \end{bmatrix} \begin{bmatrix} x \\ x_k \end{bmatrix} + \begin{bmatrix} D_{12} & 0 \end{bmatrix} \begin{bmatrix} u \\ y \end{bmatrix} + D_{11} w$$

$$\begin{bmatrix} I & -D_k \\ -D_{22} & I \end{bmatrix} \begin{bmatrix} u \\ y \end{bmatrix} = \begin{bmatrix} 0 & C_k \\ C_2 & 0 \end{bmatrix} \begin{bmatrix} x \\ x_k \end{bmatrix} + \begin{bmatrix} 0 \\ D_{21} \end{bmatrix} w$$

$$\boxed{\begin{aligned} \dot{\bar{x}} &= \bar{A}\bar{x} + \bar{B}w \\ z &= \bar{C}\bar{x} + \bar{D}w \end{aligned}}$$

$w \mapsto z$

$$\boxed{\bar{D} + \bar{C}(sI - \bar{A})^{-1}\bar{B}}$$

Well posed iff $\begin{bmatrix} I & -D_k \\ -D_{22} & I \end{bmatrix}^{-1}$ exists.

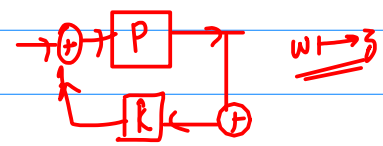

$w \mapsto z$

$$\begin{bmatrix} I & -K \\ -P & I \end{bmatrix}$$

$$\Updownarrow$$

$$\begin{bmatrix} I & -\hat{D} \\ -D & I \end{bmatrix}$$