CONTINUED FROM PART- 1

Publication After 18 Months:

The following Patent Applications have been published under Section 11A (3) of The Patents (Amendment) Act, 2005. Any Person may file representation by way of opposition to the Controller of Patents at the appropriate office against the grant of the patent in the prescribed manner under section 25(1) of the Patents (Amendment) Act, 2005 read with the rule 55 of The Patents (Amendment) Rules, 2006:

(12) PATENT APPLICATION PUBLICATION
(21) Application No.202411024882 A
(19) INDIA
(22) Date of filing of Application :27/03/2024
(43) Publication Date : 07/11/2025

(54) Title of the invention : AUTOMATIC NAIL CARE DEVICE

(51) International classification	:G06F0003010000, G06K0009620000, A61H0007000000, B60N0002560000, H04N0021810000	(71)**Name of Applicant :** **1)Chandigarh University** Address of Applicant :National Highway 95, Chandigarh-Ludhiana Highway, Mohali, Punjab 140413, India. Mohali Punjab India **2)Chandigarh University Technology Business Incubator**
(31) Priority Document No	:NA	(72)**Name of Inventor :**
(32) Priority Date	:NA	**1)Vivek Sharma**
(33) Name of priority country	:NA	
(86) International Application No	:NA	
Filing Date	:NA	
(87) International Publication No	: NA	
(61) Patent of Addition to Application Number	:NA	
Filing Date	:NA	
(62) Divisional to Application Number	:NA	
Filing Date	:NA	

(57) Abstract :
An automatic nail care device, comprises of a circular-shaped body 1 developed to be positioned on a fixed surface, body 1 is crafted with palm-like structure 2 to mimic natural palm contours of human beings and facilitate precise placement of user's palm, a button 3 to activate/de-activate the device, a Peltier unit 4 for providing heat to the user's palm, or blowing air towards the wire 7 for providing a gentle massaging sensation on the user's palm, an artificial intelligence based imaging unit 5 for capturing and processing multiple images of the user's hand, a robotic link 6 for positioning a helical-shaped metallic wire 7, a heating unit to deliver controlled heat to the wire 7, air blower 9 or blowing air towards the wire 7.

No. of Pages : 16 No. of Claims : 5

(12) PATENT APPLICATION PUBLICATION
(21) Application No.202411024883 A
(19) INDIA
(22) Date of filing of Application :27/03/2024
(43) Publication Date : 07/11/2025

(54) Title of the invention : AUTOMATED CABLE MANAGEMENT DEVICE

(51) International classification	:A61B0017000000, A61B0090000000, A61M0039020000, H04N0005225000, D07B0007140000
(31) Priority Document No	:NA
(32) Priority Date	:NA
(33) Name of priority country	:NA
(86) International Application No	:NA
Filing Date	:NA
(87) International Publication No	: NA
(61) Patent of Addition to Application Number	:NA
Filing Date	:NA
(62) Divisional to Application Number	:NA
Filing Date	:NA

(71)**Name of Applicant :**
1)Chandigarh University
Address of Applicant :National Highway 95, Chandigarh-Ludhiana Highway, Mohali, Punjab 140413, India. Mohali Punjab India
2)Chandigarh University Technology Business Incubator
(72)**Name of Inventor :**
1)Rashi Tyagi

(57) Abstract :
An automated cable management device, comprising a U-shaped perforated body 1 to accommodate multiple cable wires, motorized ball and socket joint 3 to affix the body 1 with hooks, AI-based imaging unit 4 to determine number of accommodated wires and diameter of the wire, motorized drawer arrangement 5 to provide extension of the body 1 to accommodate wires properly, RFID tag encrypted with parameters of the wire, RFID scanner 6 to scan the tags, motorized sliding unit 8 to assist the grippers 7, grippers 7 for gripping and separating the wires to prevent interaction between the wires, telescopic rod 9 to regulate distance of the body 1 from the wall as per user's requirement, motorized transparent lid 10 to enclose the wires within the body 1 to prevent exposure of the wires to rodents.

No. of Pages : 17 No. of Claims : 7

(12) PATENT APPLICATION PUBLICATION
(21) Application No.202411024884 A
(19) INDIA
(22) Date of filing of Application :27/03/2024
(43) Publication Date : 07/11/2025

(54) Title of the invention : BEVERAGE PREPARATION ASSISTIVE DEVICE

(51) International classification	:B23Q0003080000, A44B0019260000, A61B0017000000, A01G0003040000, B64D0039060000	(71)**Name of Applicant :** **1)Chandigarh University** Address of Applicant :National Highway 95, Chandigarh-Ludhiana Highway, Mohali, Punjab 140413, India. Mohali Punjab India **2)Chandigarh University Technology Business Incubator**
(31) Priority Document No	:NA	(72)**Name of Inventor :**
(32) Priority Date	:NA	**1)Manjot Kaur**
(33) Name of priority country	:NA	
(86) International Application No	:NA	
Filing Date	:NA	
(87) International Publication No	: NA	
(61) Patent of Addition to Application Number	:NA	
Filing Date	:NA	
(62) Divisional to Application Number	:NA	
Filing Date	:NA	

(57) Abstract :
A beverage preparation assistive device comprises a body 1 associated with the device, configure with a circular disc 2 carved with a slot 3 utilized to position over a beverage container, a cylindrical member 4 attached beneath the disc 2 via a motorized intermittent rotation arrangement that includes a circular plate fabricated with a pair of protrusions paired with a motorized disc 2, a square shaped member 5 attached with the cylindrical member 4 and configured with a motorized clamp 6 to clasp the string, a pair of L-shaped telescopic rods 7 attached with the body 1 and configured with a C-shaped flap 8 attached as an end effector of each of the rods 7 to extend and simultaneously activate a motorized drawer arrangement fabricated within each of the flaps 8 include multiple motorized sliders.

No. of Pages : 19 No. of Claims : 6

(12) PATENT APPLICATION PUBLICATION
(19) INDIA
(22) Date of filing of Application :27/03/2024
(21) Application No.202411024885 A
(43) Publication Date : 07/11/2025

(54) Title of the invention : STORAGE ASSISTIVE DEVICE FOR SUN VISOR

(51) International classification	:B60J0003020000, B60R0007080000, B60R0011000000, F16B0047000000, G02C0007100000
(31) Priority Document No	:NA
(32) Priority Date	:NA
(33) Name of priority country	:NA
(86) International Application No	:NA
Filing Date	:NA
(87) International Publication No	: NA
(61) Patent of Addition to Application Number	:NA
Filing Date	:NA
(62) Divisional to Application Number	:NA
Filing Date	:NA

(71)**Name of Applicant :**
1)Chandigarh University
Address of Applicant :National Highway 95, Chandigarh-Ludhiana Highway, Mohali, Punjab 140413, India. Mohali Punjab India
2)Chandigarh University Technology Business Incubator
(72)**Name of Inventor :**
1)Sanjeet Singh

(57) Abstract :
A storage assistive device for sun visor, comprising a frame 1 having a first and second portion installed on a sun visor of a vehicle, a camera 2 detects positioning of frame 1 on sun visor via a user, a motorized clipper 3 grips sun visor as a means of securing frame 1 on sun visor, a curved plate 4 pivoted at second portion for hanging a sunglass on plate 4, an electromagnet adheres plate 4 with frame 1 for locking plate 4, a sliding unit 5 translates sunglass in proximity to user's hand for facilitating user to easily access sunglass, a primary LDR detects light intensity of surrounding of frame 1, a robotic link 7 positions a suction cup 8 on a fixed surface for adhering link 7 on surface, followed by pulling of sun visor for blocking sunlight from falling on user.

No. of Pages : 15 No. of Claims : 3

(12) PATENT APPLICATION PUBLICATION
(21) Application No.202411024886 A
(19) INDIA
(22) Date of filing of Application :27/03/2024
(43) Publication Date : 07/11/2025

(54) Title of the invention : AGRICULTURAL FERTILIZING ASSISTIVE DEVICE

(51) International classification	:G06F0003041000, G01S0017890000, G06T0007000000, A01D0034000000, B61B0001020000	(71)**Name of Applicant :** **1)Chandigarh University** Address of Applicant :National Highway 95, Chandigarh-Ludhiana Highway, Mohali, Punjab 140413, India. Mohali Punjab India **2)Chandigarh University Technology Business Incubator**
(31) Priority Document No	:NA	(72)**Name of Inventor :**
(32) Priority Date	:NA	**1)Anjali Verma**
(33) Name of priority country	:NA	
(86) International Application No	:NA	
Filing Date	:NA	
(87) International Publication No	: NA	
(61) Patent of Addition to Application Number	:NA	
Filing Date	:NA	
(62) Divisional to Application Number	:NA	
Filing Date	:NA	

(57) Abstract :
A agricultural fertilizing assistive device, comprising a platform 1 positioned in proximity to an agricultural field to be fertilized, a multi-sectioned chamber 2 is arranged over the platform 1 via a pair of links 3 that is developed to store various types of fertilizers, an artificial intelligence-based imaging unit 11 evaluates a 3-Dimensional mapping of the field, a touch interactive display panel 4 to select a desired area over the field to be fertilized, a laser acuity sensor sensor installed over the platform 1 to determine crop biomass of the user-selected area, an iris aperture 5 installed at base portion of each section of the chamber 2 to allow dispensing of the fertilizers, a container 7 detachably arranged over the platform 1 to receive the dispensed fertilizers and a pair of robotic grippers 10 configured over the platform 1 for gripping the container 7.

No. of Pages : 19 No. of Claims : 7

(12) PATENT APPLICATION PUBLICATION
(21) Application No.202411024847 A
(19) INDIA
(22) Date of filing of Application :27/03/2024
(43) Publication Date : 07/11/2025

(54) Title of the invention : CHAFF SEPARATING DEVICE

(51) International classification	:B61B0001020000, G06F0021310000, G06F0003041000, A47K0007020000, F03D0013200000	(71)**Name of Applicant :** **1)Chandigarh Group of Colleges** Address of Applicant :Landran Kharar Banur Highway, Sector 112, Sahibzada Ajit Singh Nagar, Landran, Mohali, Punjab-140307, India. Mohali Punjab India
(31) Priority Document No	:NA	(72)**Name of Inventor :**
(32) Priority Date	:NA	**1)Ruby Sharma**
(33) Name of priority country	:NA	**2)Dr. Aaruni**
(86) International Application No	:NA	**3)Mansi Dhiman**
Filing Date	:NA	**4)Saijal Bhuria**
(87) International Publication No	: NA	
(61) Patent of Addition to Application Number	:NA	
Filing Date	:NA	
(62) Divisional to Application Number	:NA	
Filing Date	:NA	

(57) Abstract :
A chaff separating device comprises of a platform 1 installed over a fixed surface by means of plurality of suction cups 2 arranged beneath the platform 1 , a chamber 7 is arranged over the platform 1 by means of a link 6 that is stored with grain from which chaff is to be separated, a touch interactive display panel 10 to provide input, an electronically controller valve 8 installed over the chamber 7 to dispense the user-specified amount of the grains within a curved member arranged beneath the valve 8, an artificial intelligence based imaging unit 12 installed over the platform 1 determines dispensing of the grains in the member, and an inverted L-shaped telescopic rod 3 in to extend and position a motorized shaft 4 over the member which further rotate for tapping the grains by means of multiple flaps 5 to separate the chaff from the grains.

No. of Pages : 19 No. of Claims : 6

(12) PATENT APPLICATION PUBLICATION
(21) Application No.202411024866 A
(19) INDIA
(22) Date of filing of Application :27/03/2024
(43) Publication Date : 07/11/2025

(54) Title of the invention : A PLATE TYPE GAS-GAS HEAT EXCHANGER

(51) International classification	:F23L0015040000, F28D0019040000, C10G0009200000, F22D0001360000, F28D0021000000
(31) Priority Document No	:NA
(32) Priority Date	:NA
(33) Name of priority country	:NA
(86) International Application No	:NA
Filing Date	:NA
(87) International Publication No	: NA
(61) Patent of Addition to Application Number	:NA
Filing Date	:NA
(62) Divisional to Application Number	:NA
Filing Date	:NA

(71)**Name of Applicant :**
1)ENGINEERS INDIA LIMITED
Address of Applicant :Engineers India Bhawan, 1, Bhikaji Cama Place New Delhi India 110066 New Delhi Delhi India
(72)**Name of Inventor :**
1)MANDIP KAPOOR
2)SADHNA SINGH
3)AMIT PRAKASH
4)SHILPA SINGH
5)AJAY KUMAR JAIN
6)GRANDHI SRIVARDHAN
7)ANKUR SAINI
8)AKHIL GOBIND

(57) Abstract :
A plate type gas-gas heat exchanger (400) comprises a casing (402) having a first end (402a) and a second end (402b). A first fluid inlet (404) and a second fluid outlet (410) are configured in a first portion (402a-1) and a second portion (402a-2) of the first end (402a). The first fluid inlet (404) receives a first fluid (F1). A second fluid inlet (406) and a first fluid outlet (408) are configured in a first portion (402b-1) and a second portion (402b-2) of the second end (402b) respectively. The second fluid inlet (406) receives a second fluid (F2). The first and second fluid outlets (408, 410) allows exit of the first and second fluids (F1, F2) respectively from the heat exchanger (400), after heat exchange. The first and second fluid (F1, F2) flow in opposite directions, creating a true counter-current flow pattern across an entire length of the heat exchanger (400).

No. of Pages : 33 No. of Claims : 15

(12) PATENT APPLICATION PUBLICATION
(21) Application No.202411024867 A
(19) INDIA
(22) Date of filing of Application :27/03/2024
(43) Publication Date : 07/11/2025

(54) Title of the invention : TWO-WHEELER PARKING ASSISTIVE DEVICE

(51) International classification	:A61H0003000000, G01C0021360000, G06T0005000000, G01J0003520000, H04N0013279000	(71)**Name of Applicant :** **1)Chandigarh University** Address of Applicant :National Highway 95, Chandigarh-Ludhiana Highway, Mohali, Punjab 140413, India. Mohali Punjab India **2)Chandigarh University Technology Business Incubator**
(31) Priority Document No	:NA	(72)**Name of Inventor :**
(32) Priority Date	:NA	**1)Amit Verma**
(33) Name of priority country	:NA	
(86) International Application No	:NA	
Filing Date	:NA	
(87) International Publication No	: NA	
(61) Patent of Addition to Application Number	:NA	
Filing Date	:NA	
(62) Divisional to Application Number	:NA	
Filing Date	:NA	

(57) Abstract :
A two-wheeler parking assistive device comprises of, an extendable platform 1 integrated with multiple motorized wheels 7 that are dedicated towards moving of the platform 1 to different locations, a user interface installed in a computing unit associated with the device accessed by a user with an intention of parking a two-wheeler vehicle to input a desired location, an artificial intelligence enabled image capturing module 3 to determine the exact portion with respect to the platform 1 on which the stand supposed to be rested, a scissor mechanism powered plate 5 integrated via multiple motorized hinge joints 6 to accommodate the stand in a secured manner, a LDR (light dependent resistor) 4 for determining ambient lighting conditions, and multiple LED (light Emitting Diodes) lights 2 for lightening up to assist the user to properly park the vehicle in low lighting conditions.

No. of Pages : 17 No. of Claims : 5

(12) PATENT APPLICATION PUBLICATION
(19) INDIA
(22) Date of filing of Application :27/03/2024
(21) Application No.202411024868 A
(43) Publication Date : 07/11/2025

(54) Title of the invention : WALL FIXING DEVICE

(51) International classification	:G06F0003160000, G10L0015220000, A45C0007000000, B25J0009160000, H01M0010340000	(71)**Name of Applicant :** **1)Chandigarh University** Address of Applicant :National Highway 95, Chandigarh-Ludhiana Highway, Mohali, Punjab 140413, India. Mohali Punjab India **2)Chandigarh University Technology Business Incubator**
(31) Priority Document No	:NA	(72)**Name of Inventor :**
(32) Priority Date	:NA	**1)Dr. Aditya Kumar Tiwary**
(33) Name of priority country	:NA	
(86) International Application No	:NA	
Filing Date	:NA	
(87) International Publication No	: NA	
(61) Patent of Addition to Application Number	:NA	
Filing Date	:NA	
(62) Divisional to Application Number	:NA	
Filing Date	:NA	

(57) Abstract :
A wall fixing device, comprises of a telescopic handle 2 with a soft padding for a user to acquire a grip onto, a container 6 attached to the rectangular plate 1 for storing a putty material and a robotic arm attached to the rectangular plate 1 having an applying plate 1 at its end for applying putty material on the wall from the container 6, a robotic link 3 attached to the rectangular plate 1, an artificial intelligence-based imaging unit 4 to determine if a wall surface is flat or a corner, a sensing module, an ultrasonic sensor for detecting the unwanted material and the damage on the wall surface, and a microphone 5 for receiving audio commands from the user to trigger the microcontroller.

No. of Pages : 15 No. of Claims : 4

(12) PATENT APPLICATION PUBLICATION
(21) Application No.202411024869 A
(19) INDIA
(22) Date of filing of Application :27/03/2024
(43) Publication Date : 07/11/2025

(54) Title of the invention : INFANT CARRIAGE ASSISTIVE DEVICE

(51) International classification	:A61B0017000000, A61F0005010000, A61H0003000000, G08G0005040000, A63B0021008000	(71)**Name of Applicant :** **1)Chandigarh University** Address of Applicant :National Highway 95, Chandigarh-Ludhiana Highway, Mohali, Punjab 140413, India. Mohali Punjab India **2)Chandigarh University Technology Business Incubator**
(31) Priority Document No	:NA	(72)**Name of Inventor :**
(32) Priority Date	:NA	**1)Manjot Kaur**
(33) Name of priority country	:NA	
(86) International Application No	:NA	
Filing Date	:NA	
(87) International Publication No	: NA	
(61) Patent of Addition to Application Number	:NA	
Filing Date	:NA	
(62) Divisional to Application Number	:NA	
Filing Date	:NA	

(57) Abstract :
An infant carriage assistive device, comprising a frame 1 having a pair of inverted V-shaped rods 2 positioned on a ground surface, a plate 3 is configured top portion of frame 1 in a manner that convergence point of rods 2, an elongated curve-shaped body 4 to accommodate an infant over body 4 , an artificial intelligence-based imaging unit 5 detect posture and dimensions of infant, a pair of straps 7 for securing body 4 around infant, multiple pressure sensors detects pressure applied by body 4 and straps 7 on infant, a pair of motorized rollers 8 to properly fit body 4 and straps 7, a microphone 9 receives voice commands of a care giver for modulating shape of body 4 , an AQI sensor monitors presence of air pollutants, and an electronic nozzle 6 for spraying a neutralizing gas.

No. of Pages : 18 No. of Claims : 6

(12) PATENT APPLICATION PUBLICATION
(21) Application No.202411024870 A
(19) INDIA
(22) Date of filing of Application :27/03/2024
(43) Publication Date : 07/11/2025

(54) Title of the invention : CLOTH CHANGING ASSISTIVE DEVICE FOR BEACH

(51) International classification	:G06F0003160000, G10L0015220000, G06Q0010100000, G06F0021320000, H04L0067120000	(71)**Name of Applicant :** **1)Chandigarh University** Address of Applicant :National Highway 95, Chandigarh-Ludhiana Highway, Mohali, Punjab 140413, India. Mohali Punjab India **2)Chandigarh University Technology Business Incubator**
(31) Priority Document No	:NA	(72)**Name of Inventor :**
(32) Priority Date	:NA	**1)Sanjeet Singh**
(33) Name of priority country	:NA	
(86) International Application No	:NA	
Filing Date	:NA	
(87) International Publication No	: NA	
(61) Patent of Addition to Application Number	:NA	
Filing Date	:NA	
(62) Divisional to Application Number	:NA	
Filing Date	:NA	

(57) Abstract :
A cloth changing assistive device for beach comprises of a platform 1 positioned on a ground surface at a beach, a weight sensor is positioned on the platform 1 for detecting presence of the user on the platform 1, a pneumatic plate 2 configured with the platform 1 for constructing an enclosure around the platform 1, a set of C-shaped members 3 installed with one of the plates, plurality of motorized hinges 4 configured with the members for tilting and deploying the members, a set of electronic nozzles 5 attached with a set of chambers stored with water, plurality of iris pores 6 configured with plates for drying the user's body, a microphone 8 positioned on one of the plates for enabling the user to give voice commands, a speaker 9 mounted on one of the plates for notifying the individual regarding presence of the user.

No. of Pages : 15 No. of Claims : 4

(12) PATENT APPLICATION PUBLICATION
(21) Application No.202411024871 A
(19) INDIA
(22) Date of filing of Application :27/03/2024
(43) Publication Date : 07/11/2025

(54) Title of the invention : BOOK MANAGEMENT DEVICE FOR BOOK SHELF

(51) International classification	:A47B0063000000, A47B0065000000, H04W0064000000, G07G0001000000, A47B0097000000	(71)**Name of Applicant :** **1)Chandigarh University** Address of Applicant :National Highway 95, Chandigarh-Ludhiana Highway, Mohali, Punjab 140413, India. Mohali Punjab India **2)Chandigarh University Technology Business Incubator**
(31) Priority Document No	:NA	(72)**Name of Inventor :**
(32) Priority Date	:NA	**1)Richa Salwan**
(33) Name of priority country	:NA	
(86) International Application No	:NA	
Filing Date	:NA	
(87) International Publication No	: NA	
(61) Patent of Addition to Application Number	:NA	
Filing Date	:NA	
(62) Divisional to Application Number	:NA	
Filing Date	:NA	

(57) Abstract :
A book management device for book shelf, comprising of a platform 1 developed to be installed at a top portion of a book shelf placed with multiple books, a touch enabled screen to give input commands regarding name of one of the books required by the user, an imaging unit 4 for detecting exact location of the user's defined book, a telescopically operated gripper 8 for translating and positioning the gripper 8 in proximity to the book and actuates the gripper 8 for gripping and placing the book on a tray attached with the platform 1, an L-shaped telescopically operated rod 7 installed with the platform 1 and attached with a first vertical platform 2 for positioning the platforms within the shelf, and an OCR (Optical Character Recognition) module 5 for detecting name of the books placed in the shelf.

No. of Pages : 16 No. of Claims : 5

(12) PATENT APPLICATION PUBLICATION
(21) Application No.202411024872 A
(19) INDIA
(22) Date of filing of Application :27/03/2024
(43) Publication Date : 07/11/2025

(54) Title of the invention : WATER TRANSPORTATION AND STORAGE DEVICE

(51) International classification	:H04N0005232000, H04W0004800000, A61B0090000000, A61K0036670000, H04N0005225000
(31) Priority Document No	:NA
(32) Priority Date	:NA
(33) Name of priority country	:NA
(86) International Application No	:NA
Filing Date	:NA
(87) International Publication No	: NA
(61) Patent of Addition to Application Number	:NA
Filing Date	:NA
(62) Divisional to Application Number	:NA
Filing Date	:NA

(71)**Name of Applicant :**
1)Chandigarh University
Address of Applicant :National Highway 95, Chandigarh-Ludhiana Highway, Mohali, Punjab 140413, India. Mohali Punjab India
2)Chandigarh University Technology Business Incubator
(72)**Name of Inventor :**
1)Jasgurpreet Singh

(57) Abstract :
The present invention relates to a water transportation and storage device, comprising a platform 1 associated with the device developed to be positioned on a bank of a water body manually by a user, plurality of suction cups 2 for securely gripping ground surface of the bank, telescopic rod 3 to extend and position a plate 4 in proximity to the surface for successfully gripping the surface with an optimum amount of force, switch pressed by the user for actuation of a toggle weight 7 via a guide rail 8, crank lever arrangement 9 to push the weight 7 for accumulation of water via a hemispherical body 10, resulting in dispensing the water on a storage unit 11 due to the seesaw movement of the piper over the fulcrum 6, artificial intelligence based image capturing module 12 to determine presence of any living organisms within the accumulated water.

No. of Pages : 16 No. of Claims : 4

(12) PATENT APPLICATION PUBLICATION
(21) Application No.202411024888 A
(19) INDIA
(22) Date of filing of Application :27/03/2024
(43) Publication Date : 07/11/2025

(54) Title of the invention : AUTOMATED STAMP APPLICATION DEVICE

(51) International classification	:B25J0015000000, D06F0039120000, B25J0013080000, H04W0076140000, A61M0039020000	(71)**Name of Applicant :** **1)Chandigarh University** Address of Applicant :National Highway 95, Chandigarh-Ludhiana Highway, Mohali, Punjab 140413, India. Mohali Punjab India **2)Chandigarh University Technology Business Incubator**
(31) Priority Document No	:NA	(72)**Name of Inventor :**
(32) Priority Date	:NA	**1)Divya**
(33) Name of priority country	:NA	
(86) International Application No	:NA	
Filing Date	:NA	
(87) International Publication No	: NA	
(61) Patent of Addition to Application Number	:NA	
Filing Date	:NA	
(62) Divisional to Application Number	:NA	
Filing Date	:NA	

(57) Abstract :
An automated stamp application device comprises a housing 1 configured with motorized omnidirectional wheels, a touch interactive display panel 3 installed over the housing 1 to provide an input, a motorized sliding unit 4 installed at bottom portion of the chamber to provide translation to the plate, a robotic gripper 5 installed within the housing 1 to grip the positioned document and place over a platform 6 arranged within the housing 1, an artificial intelligence-based imaging unit 7 is installed within the housing 1 determines presence of text over the document, an OCR module integrated with the imaging unit to determine text written over the document, a motorized cylindrical member 8 installed within the housing 1 and configured within plurality of containers 9 each developed to accommodate a specific type of stamp, and a motorized door 10 installed over each of the containers opens only a particular door.

No. of Pages : 16 No. of Claims : 7

(12) PATENT APPLICATION PUBLICATION
(21) Application No.202411024889 A
(19) INDIA
(22) Date of filing of Application :27/03/2024
(43) Publication Date : 07/11/2025

(54) Title of the invention : GRILL EMBEDDED COOKING SYSTEM

(51) International classification	:F16G0005180000, A47J0037070000, A47J0037060000, E05G0001020000, F24F0013140000	(71)**Name of Applicant :** **1)Chandigarh University** Address of Applicant :National Highway 95, Chandigarh-Ludhiana Highway, Mohali, Punjab 140413, India. Mohali Punjab India **2)Chandigarh University Technology Business Incubator**
(31) Priority Document No	:NA	(72)**Name of Inventor :**
(32) Priority Date	:NA	**1)Vishal Ahuja**
(33) Name of priority country	:NA	
(86) International Application No	:NA	
Filing Date	:NA	
(87) International Publication No	: NA	
(61) Patent of Addition to Application Number	:NA	
Filing Date	:NA	
(62) Divisional to Application Number	:NA	
Filing Date	:NA	

(57) Abstract :
A grill embedded cooking system, comprising a framework 1 installed in a cabinet grill, a microphone integrated in the framework 1 to receive user's input, plurality of plates 2 arranged in the framework 1 to accommodate multiple eatables, a ball and socket joint for providing rotating movement to the links 3 along with the plates 2 for permitting heat to get experienced on the eatables thoroughly, an imaging unit 4 installed in the framework 1 to monitor cooking status of the eatables, a robotic clipper 5 arranged in between the plate 2 and the link to get disengaged for placing the plate 2 accommodating the cooked eatable on a sliding unit 6, a flap 7 arranged in the framework 1 via a hinge joint 8 to get opened, followed by actuation of the sliding unit 6 to translate the placed plate 2 towards the opened flap 7.

No. of Pages : 17 No. of Claims : 6

(12) PATENT APPLICATION PUBLICATION
(21) Application No.202411024890 A
(19) INDIA
(22) Date of filing of Application :27/03/2024
(43) Publication Date : 07/11/2025

(54) Title of the invention : ARCHEOLOGICAL ANALYSIS ASSISTIVE DEVICE

(51) International classification	:G06T0007000000, H04N0007180000, A61B0034200000, H04N0005247000, H04N0019610000
(31) Priority Document No	:NA
(32) Priority Date	:NA
(33) Name of priority country	:NA
(86) International Application No	:NA
Filing Date	:NA
(87) International Publication No	: NA
(61) Patent of Addition to Application Number	:NA
Filing Date	:NA
(62) Divisional to Application Number	:NA
Filing Date	:NA

(71)**Name of Applicant :**
1)Chandigarh University
Address of Applicant :National Highway 95, Chandigarh-Ludhiana Highway, Mohali, Punjab 140413, India. Mohali Punjab India
2)Chandigarh University Technology Business Incubator
(72)**Name of Inventor :**
1)Avinash Kumar Pandey

(57) Abstract :
An archeological analysis assistive device, comprising a rectangular frame 1 positioned on a ground surface, pair of hydraulic pushers 2 installed with the frame 1 to extend for lifting the wheels away from the ground surface, a shovel 3 installed with the frame 1 for digging the ground surface for exacting soil, a robotic arm 4 installed on the frame 1 and equipped with a scoop for collecting the soil as sample, an artificial intelligence-based imaging unit 5 mounted on the frame 1 for capturing and processing multiple images of the area and the processed images are sent over the computing unit for further analysis.

No. of Pages : 14 No. of Claims : 5

(12) PATENT APPLICATION PUBLICATION
(19) INDIA
(22) Date of filing of Application :27/03/2024
(21) Application No.202411024891 A
(43) Publication Date : 07/11/2025

(54) Title of the invention : AUTOMATED CLING WRAP WRAPPING DEVICE

(51) International classification	:G06F0003042000, G06F0001160000, G06F0003041000, G02F0001133300, B65G0023080000
(31) Priority Document No	:NA
(32) Priority Date	:NA
(33) Name of priority country	:NA
(86) International Application No	:NA
Filing Date	:NA
(87) International Publication No	: NA
(61) Patent of Addition to Application Number	:NA
Filing Date	:NA
(62) Divisional to Application Number	:NA
Filing Date	:NA

(71)**Name of Applicant :**
1)Chandigarh University
Address of Applicant :National Highway 95, Chandigarh-Ludhiana Highway, Mohali, Punjab 140413, India. Mohali Punjab India
2)Chandigarh University Technology Business Incubator
(72)**Name of Inventor :**
1)Ranvijay Kumar

(57) Abstract :
An automated cling wrap wrapping device, comprising a rectangular frame 1 affixed with surface of a wall, a touch interactive display panel 2 installed over the frame 1 to enable a user to provide input commands, an artificial intelligence based imaging unit 3 installed over the frame 1 to determine dimension of a container, an extendable gripper 4 configured with the frame 1 to grip the container, a motorized roller 5 installed with the frame 1 and wrapped with cling wrap to rotate on axis to unwrap the cling wrap, a pair of robotic arms 6 installed with the frame 1 to align the unwrapped cling wrap over the container, a motorized cutter 7 over the sliding unit simultaneous to actuation of the cutter 7 to cut the cling wrap and a flap 8 configured with the frame 1 to wrap the aligned cling wrap around periphery of the container.

No. of Pages : 15 No. of Claims : 5

(12) PATENT APPLICATION PUBLICATION
(21) Application No.202411024873 A
(19) INDIA
(22) Date of filing of Application :27/03/2024
(43) Publication Date : 07/11/2025

(54) Title of the invention : MODULAR SHADE PROVIDING DEVICE FOR GROUND SURFACES

(51) International classification	:G02B0027010000, H04N0005225000, G06F0003010000, E01H0001080000, F25D0017060000	(71)**Name of Applicant :** **1)Chandigarh University** Address of Applicant :National Highway 95, Chandigarh-Ludhiana Highway, Mohali, Punjab 140413, India. Mohali Punjab India **2)Chandigarh University Technology Business Incubator**
(31) Priority Document No	:NA	(72)**Name of Inventor :**
(32) Priority Date	:NA	**1)Sandeep Singh**
(33) Name of priority country	:NA	
(86) International Application No	:NA	
Filing Date	:NA	
(87) International Publication No	: NA	
(61) Patent of Addition to Application Number	:NA	
Filing Date	:NA	
(62) Divisional to Application Number	:NA	
Filing Date	:NA	

(57) Abstract :
A modular shade providing device for ground surfaces, comprising a body 1 developed to be positioned on a ground surface, suction cups 2 for securing the body 1 on said surface, artificial intelligence-based imaging unit 3 for capturing multiple images of a user lying underneath the plate 4 to determine exact location of the user, motorized ball and socket joint 5 for orienting the plate 4 over the user's face portion, motorized hinge joint 7 for deploying a flap 8 in view of creating a shade over the user and facilitate the user in properly using electronic gadgets and reading books without causing glare on the user's eyes and motorized air blower 9 for blowing cold air towards the user in view of providing comfort to the user.

No. of Pages : 14 No. of Claims : 3

(12) PATENT APPLICATION PUBLICATION
(21) Application No.202411024874 A
(19) INDIA
(22) Date of filing of Application :27/03/2024
(43) Publication Date : 07/11/2025

(54) Title of the invention : TODDLER HOLDING AND RESTING ASSISTIVE DEVICE

(51) International classification	:F16D0027105000, A61G0005100000, G02B0023240000, G01N0015140000, F16D0121220000	(71)**Name of Applicant :** **1)Chandigarh University** Address of Applicant :National Highway 95, Chandigarh-Ludhiana Highway, Mohali, Punjab 140413, India. Mohali Punjab India **2)Chandigarh University Technology Business Incubator**
(31) Priority Document No	:NA	(72)**Name of Inventor :**
(32) Priority Date	:NA	**1)Manjot Kaur**
(33) Name of priority country	:NA	
(86) International Application No	:NA	
Filing Date	:NA	
(87) International Publication No	: NA	
(61) Patent of Addition to Application Number	:NA	
Filing Date	:NA	
(62) Divisional to Application Number	:NA	
Filing Date	:NA	

(57) Abstract :
A toddler holding and resting assistive device, comprises of a frame developed to be positioned in contact with hand rest of a wheelchair, a pair of L-shaped telescopic rods 1 to extends/retract an extendable rectangular plate 4 for allowing a user seated over the wheelchair to accommodate a toddler, plurality of electromagnetic clamps 2 for securing the frame with the wheelchair, an electromagnetic spring 3 for absorbing sudden jerks and movements, an artificial intelligence based imaging unit 5 for capturing and processing multiple images of the frame, plurality of primary motorized hinges 6 to modulate shape of the platform as per shape of the toddler's back portion, a microphone for enabling the user to give input commands, a secondary motorized hinge 7 attached with a curved shaped member 8 for tilting the member 8, a laser emitter o emit laser beam of light in direction of the flies/mosquitoes.

No. of Pages : 18 No. of Claims : 6

(12) PATENT APPLICATION PUBLICATION
(21) Application No.202411024875 A
(19) INDIA
(22) Date of filing of Application :27/03/2024
(43) Publication Date : 07/11/2025

(54) Title of the invention : AUTOMATIC WIRE STRIPPING DEVICE

(51) International classification	:H02G0001120000, A61B0018200000, H02K0003120000, A61B0017120000, H02G0003040000	(71)**Name of Applicant :** **1)Chandigarh University** Address of Applicant :National Highway 95, Chandigarh-Ludhiana Highway, Mohali, Punjab 140413, India. Mohali Punjab India **2)Chandigarh University Technology Business Incubator**
(31) Priority Document No	:NA	(72)**Name of Inventor :**
(32) Priority Date	:NA	**1)Richa Salwan**
(33) Name of priority country	:NA	
(86) International Application No	:NA	
Filing Date	:NA	
(87) International Publication No	: NA	
(61) Patent of Addition to Application Number	:NA	
Filing Date	:NA	
(62) Divisional to Application Number	:NA	
Filing Date	:NA	

(57) Abstract :
An automatic wire stripping device comprising, a cuboidal shaped body 1 carved with a V-shaped slot 2 for accommodating an electric wire, a handle 3 is attached with body 1 for providing grip to user while handling the body, a pair of motorized calendar rollers 4 positioned on end sections of slot 2 to rotate in an alternate direction to translate wire from one end to another end of body, a laser acuity sensor 5 attached on body 1 to detect the diameter of wire, multiple pneumatic blocks 6 positioned on inner periphery of slot 2 for securely gripping wire inside slot, a capacitance sensor 7 mapped on body 1 to detect the depth of the insulation of wire, an extendable horizontal blade positioned on middle portion of slot 2 to extend for making a cut over insulation of wire.

No. of Pages : 14 No. of Claims : 3

(12) PATENT APPLICATION PUBLICATION
(21) Application No.202411024876 A
(19) INDIA
(22) Date of filing of Application :27/03/2024
(43) Publication Date : 07/11/2025

(54) Title of the invention : PLANT GRAFTING ASSISTIVE DEVICE

(51) International classification	:G01S0007481000, A61B0001000000, G01S0017890000, G01S0007486300, G01S0007497000
(31) Priority Document No	:NA
(32) Priority Date	:NA
(33) Name of priority country	:NA
(86) International Application No	:NA
Filing Date	:NA
(87) International Publication No	: NA
(61) Patent of Addition to Application Number	:NA
Filing Date	:NA
(62) Divisional to Application Number	:NA
Filing Date	:NA

(71)**Name of Applicant :**
1)Chandigarh University
Address of Applicant :National Highway 95, Chandigarh-Ludhiana Highway, Mohali, Punjab 140413, India. Mohali Punjab India
2)Chandigarh University Technology Business Incubator
(72)**Name of Inventor :**
1)Rashi Tyagi

(57) Abstract :
A plant grafting assistive device, comprises of an elongated body 1 having a first and second portion and first portion of the body 1 is installed with a rod 6 that is attached with a curved-shaped blade 7 and second portion of the body 1 is attached with a handle 8 for acquiring a grip over the body 1, an imaging unit 5 detects thickness and angle of stem of the plant, an angle sensor for detecting angle of the body 1, a speaker 2 for notifying the user to maintain the body 1 at the determined angle, a LiDAR (Light Detection and Ranging) sensor to detect distance between the body 1 and stem of plant, a curved-shaped cutter to perform grafting operation on the plant, and an electronically controlled nozzle 4 to dispense the gel over the portion of the plant.

No. of Pages : 18 No. of Claims : 4

(12) PATENT APPLICATION PUBLICATION
(21) Application No.202411024892 A
(19) INDIA
(22) Date of filing of Application :27/03/2024
(43) Publication Date : 07/11/2025

(54) Title of the invention : AUTOMATED RAW NOODLES PREPARATION DEVICE

(51) International classification	:G06Q0050000000, G01B0011060000, A21C0011180000, E04F0019040000, F25B0021020000
(31) Priority Document No	:NA
(32) Priority Date	:NA
(33) Name of priority country	:NA
(86) International Application No	:NA
Filing Date	:NA
(87) International Publication No	: NA
(61) Patent of Addition to Application Number	:NA
Filing Date	:NA
(62) Divisional to Application Number	:NA
Filing Date	:NA

(71)**Name of Applicant :**
1)Chandigarh University
Address of Applicant :National Highway 95, Chandigarh-Ludhiana Highway, Mohali, Punjab 140413, India. Mohali Punjab India
2)Chandigarh University Technology Business Incubator
(72)**Name of Inventor :**
1)Sukhvinder Singh

(57) Abstract :
An automated raw noodles preparation device, comprising a vertical platform 1 positioned on a fixed surface, a cylindrical hollow body 2 to be placed with dough via a rod 8, a touch enabled screen 3 platform 1 for enabling a user to give input commands for preparing raw noodles, a motorized lid 4 for allowing user to add dough within member, plurality of iris pores 5 to detect the thickness of noodles, an L-shaped telescopically operated pusher for pushing dough, an ultrasonic sensor for detecting length of noodles, a circular motorized slider 10 for translating blade, a Peltier unit for cooling container for solidifying noodles, a moisture sensor for detecting moisture level of noodles, a speaker 11 for notifying user to collect noodles, plurality of suction cups 12 for adhering platform 1 on fixed surface, an odor sensor detects dough to be rotten.

No. of Pages : 18 No. of Claims : 6

(12) PATENT APPLICATION PUBLICATION
(21) Application No.202411024893 A
(19) INDIA
(22) Date of filing of Application :27/03/2024
(43) Publication Date : 07/11/2025

(54) Title of the invention : AUTOMATED GARLIC CRUSHING DEVICE

(51) International classification	:A61K0036610000, G06F0003010000, A23N0015080000, B61B0001020000, G10L0015220000
(31) Priority Document No	:NA
(32) Priority Date	:NA
(33) Name of priority country	:NA
(86) International Application No	:NA
Filing Date	:NA
(87) International Publication No	: NA
(61) Patent of Addition to Application Number	:NA
Filing Date	:NA
(62) Divisional to Application Number	:NA
Filing Date	:NA

(71)**Name of Applicant :**
1)Chandigarh University
Address of Applicant :National Highway 95, Chandigarh-Ludhiana Highway, Mohali, Punjab 140413, India. Mohali Punjab India
2)Chandigarh University Technology Business Incubator
(72)**Name of Inventor :**
1)Vinay Kumar

(57) Abstract :
An automated garlic crushing device, comprising a platform 1 positioned on a fixed surface and developed to accommodate peeled garlic cloves, a touch enabled screen 2 is installed on the platform 1 for enabling a user to give input commands for crushing the cloves, an artificial intelligence-based imaging unit 3 for detecting exact location of the cloves on the platform 1, plurality of flaps 4 installed on the platform 1 via plurality of motorized sliders 5 manner to align the cloves underneath a meshed curved-shaped plate 6 installed on the platform 1 via an L-shaped telescopically operated rod 7, a proximity sensor for detecting presence of the cloves underneath the cloves, an RTC (Real-Time Clock) for keeping an accurate track on real-time and a speaker mounted on the platform 1 for notifying the user to collect the crushed garlic from the platform 1.

No. of Pages : 16 No. of Claims : 6

(12) PATENT APPLICATION PUBLICATION
(21) Application No.202411024894 A
(19) INDIA
(22) Date of filing of Application :27/03/2024
(43) Publication Date : 07/11/2025

(54) Title of the invention : AUTOMATED ZIGZAG METALLIC STRIP MAKING DEVICE

(51) International classification	:B22D0011060000, A61F0013472000, B60C0009260000, C12N0015900000, H05K0013000000
(31) Priority Document No	:NA
(32) Priority Date	:NA
(33) Name of priority country	:NA
(86) International Application No	:NA
Filing Date	:NA
(87) International Publication No	: NA
(61) Patent of Addition to Application Number	:NA
Filing Date	:NA
(62) Divisional to Application Number	:NA
Filing Date	:NA

(71)**Name of Applicant :**
1)Chandigarh University
Address of Applicant :National Highway 95, Chandigarh-Ludhiana Highway, Mohali, Punjab 140413, India. Mohali Punjab India
2)Chandigarh University Technology Business Incubator
(72)**Name of Inventor :**
1)Lochan Sharma

(57) Abstract :
An automated zigzag metallic strip making device, comprises a platform 1 developed to be positioned on a ground surface, a plate 3 is accessed by a user for positioning a metallic strip that is be reformed into zigzag manner, an artificial intelligence-based imaging unit 4 detects dimensions of strip, a pair of motorized sliding units 5 translates a pair of inverted V-shaped members 6 at an optimum position, a motorized circular slider 7 arranged on platform 1 positions a pair of flaps 9 integrated on bar 8 in contact with strip, a hydraulic actuator for applying a pressure on the strip in order to bend the strip for making a zigzag pattern, and a robotic gripper 10 for changing orientating of the strip.

No. of Pages : 14 No. of Claims : 3

(12) PATENT APPLICATION PUBLICATION
(19) INDIA
(22) Date of filing of Application :27/03/2024
(21) Application No.202411024895 A
(43) Publication Date : 07/11/2025

(54) Title of the invention : PORTABLE EGGS MANAGEMENT DEVICE

(51) International classification	:A61B0017000000, H04R0003000000, H01M0010420000, A61B0017290000, G06F0003160000
(31) Priority Document No	:NA
(32) Priority Date	:NA
(33) Name of priority country	:NA
(86) International Application No	:NA
Filing Date	:NA
(87) International Publication No	: NA
(61) Patent of Addition to Application Number	:NA
Filing Date	:NA
(62) Divisional to Application Number	:NA
Filing Date	:NA

(71)**Name of Applicant :**
1)Chandigarh University
Address of Applicant :National Highway 95, Chandigarh-Ludhiana Highway, Mohali, Punjab 140413, India. Mohali Punjab India
2)Chandigarh University Technology Business Incubator
(72)**Name of Inventor :**
1)Vijay Gahlaut

(57) Abstract :
A portable eggs management device comprises of a body 1 developed to be positioned on a fixed surface 2 within an enclosure, body 1 is constructed with an elongated member configured with a first 3 and second portion 4 to accommodate multiple eggs, an artificial intelligence-based imaging unit installed on the frame for capturing and processing multiple images of surroundings, pair of motorized sliding units 5 configured on lateral sides of the platform to translate multiple flaps, a pair of double-rack gear arrangements configured on each of the platforms for translating plates, a microphone installed on the body 1 for receiving voice commands regarding accessing of egg from the body 1, a telescopically operated pusher 6 arranged on first 3 platform to push the eggs from first 3 platform towards second portion 4.

No. of Pages : 15 No. of Claims : 5

(12) PATENT APPLICATION PUBLICATION
(21) Application No.202411024877 A
(19) INDIA
(22) Date of filing of Application :27/03/2024
(43) Publication Date : 07/11/2025

(54) Title of the invention : DEVICE FOR MAINTAINING A ROOF SURFACE

(51) International classification	:G05D0001020000, A63B0024000000, B60K0007000000, B62D0025060000, B60J0007020000
(31) Priority Document No	:NA
(32) Priority Date	:NA
(33) Name of priority country	:NA
(86) International Application No	:NA
Filing Date	:NA
(87) International Publication No	: NA
(61) Patent of Addition to Application Number	:NA
Filing Date	:NA
(62) Divisional to Application Number	:NA
Filing Date	:NA

(71)**Name of Applicant :**
1)Chandigarh University
Address of Applicant :National Highway 95, Chandigarh-Ludhiana Highway, Mohali, Punjab 140413, India. Mohali Punjab India
2)Chandigarh University Technology Business Incubator
(72)**Name of Inventor :**
1)Sandeep Singh

(57) Abstract :
A device for maintaining a roof surface, comprises a rectangular base 1 having four telescopic legs 2 underneath the base 1 with motorized wheel 3 with brake shoe moves the base 1 on the roof surface, a fixing clay storage container 4 stores fixing clay, a nuts and bolts storage box stores nut and bolts, a robotic arm 5 having a sand paper 6 finishes the roof surface, robotic link 7 having a brush 8 cleans the roof surface, a robotic limb 9 fixes clay for fixing a roof panel, an imaging unit 11 captures images of vicinity of the base 1, a sensing module detects a loose roof panel and dust, a microphone 12 receives audio commands.

No. of Pages : 15 No. of Claims : 4

(12) PATENT APPLICATION PUBLICATION
(21) Application No.202411024878 A
(19) INDIA
(22) Date of filing of Application :27/03/2024
(43) Publication Date : 07/11/2025

(54) Title of the invention : PORTABLE DUST SUPPRESSION DEVICE

(51) International classification	:C09K0003220000, E02F0009220000, B02C0015000000, B66F0011040000, F02M0025080000	(71)**Name of Applicant :** **1)Chandigarh University** Address of Applicant :National Highway 95, Chandigarh-Ludhiana Highway, Mohali, Punjab 140413, India. Mohali Punjab India **2)Chandigarh University Technology Business Incubator**
(31) Priority Document No	:NA	(72)**Name of Inventor :**
(32) Priority Date	:NA	**1)Seema Rani**
(33) Name of priority country	:NA	
(86) International Application No	:NA	
Filing Date	:NA	
(87) International Publication No	: NA	
(61) Patent of Addition to Application Number	:NA	
Filing Date	:NA	
(62) Divisional to Application Number	:NA	
Filing Date	:NA	

(57) Abstract :
A portable dust suppression device, comprising an inverted U-shape frame 1 including a pair of vertical hydraulic actuators 9 interconnected with each or via a horizontal plate 2, developed to be positioned on a ground surface, multiple wheels configured beneath actuators 9 to maneuver frame 1, a push button 3 is pressed by user for generating a command regarding activation of device, a tactile sensor fabricated on frame 1, multiple of pneumatic pins 4 to extend within surface, a camera 5 for positioning plate 2 above vehicle, a canister to dispense a coating solution, a motor integrated with hinge for tilting canister to dispense coating solution over a crushing raw material loaded on vehicle in view of suppressing dust generated from material.

No. of Pages : 17 No. of Claims : 4

(12) PATENT APPLICATION PUBLICATION
(21) Application No.202411024879 A
(19) INDIA
(22) Date of filing of Application :27/03/2024
(43) Publication Date : 07/11/2025

(54) Title of the invention : ADAPTABLE COOKING ASSISTIVE DEVICE

(51) International classification	:A61H0001020000, F16C0019160000, A63B0023120000, E06B0009307000, A61B0005000000	(71)**Name of Applicant :** **1)Chandigarh University** Address of Applicant :National Highway 95, Chandigarh-Ludhiana Highway, Mohali, Punjab 140413, India. Mohali Punjab India **2)Chandigarh University Technology Business Incubator**
(31) Priority Document No	:NA	(72)**Name of Inventor :**
(32) Priority Date	:NA	**1)Sarita Simaiya**
(33) Name of priority country	:NA	
(86) International Application No	:NA	
Filing Date	:NA	
(87) International Publication No	: NA	
(61) Patent of Addition to Application Number	:NA	
Filing Date	:NA	
(62) Divisional to Application Number	:NA	
Filing Date	:NA	

(57) Abstract :
An adaptable cooking assistive device, comprising an elongated body 1 having a proximal and distal end having a handle that is accessed by a user for acquiring a grip on body 1, an artificial intelligence-based imaging unit 2 determines positioning of distal end with a cooking vessel, a vertical rod 4 is integrated at distal end by means of a motorized hinge joint 5 to tilt rod 4, an extendable L-shaped plate 6 having motorized clipper 7 grip upper portion of vessel to uplift vessel, a motorized ball and socket joint 8 provide an angular movement to plate 6 for stirring vessel, a disc 9 integrated with an expandable pulley arrangement for covering of vessel, two motorized grippers 10, each integrated with a suction unit acquire grip on a fixed surface, a motorized pivot joint provide angular movement to vessel for tilting vessel.

No. of Pages : 17 No. of Claims : 3

(12) PATENT APPLICATION PUBLICATION
(21) Application No.202411024880 A
(19) INDIA
(22) Date of filing of Application :27/03/2024
(43) Publication Date : 07/11/2025

(54) Title of the invention : SPECTACLE ACCOMMODATING AND MANAGEMENT DEVICE

(51) International classification	:F16C0011060000, B33Y0010000000, B61B0001020000, G07F0017340000, F28D0021000000
(31) Priority Document No	:NA
(32) Priority Date	:NA
(33) Name of priority country	:NA
(86) International Application No	:NA
Filing Date	:NA
(87) International Publication No	: NA
(61) Patent of Addition to Application Number	:NA
Filing Date	:NA
(62) Divisional to Application Number	:NA
Filing Date	:NA

(71)**Name of Applicant :**
1)Chandigarh University
Address of Applicant :National Highway 95, Chandigarh-Ludhiana Highway, Mohali, Punjab 140413, India. Mohali Punjab India
2)Chandigarh University Technology Business Incubator
(72)**Name of Inventor :**
1)Jayaram R

(57) Abstract :
A spectacle accommodating and management device, comprising a platform 1 attached with roof within a four-wheeler-vehicle by means of multiple suction cups 2, a camera 3 mounted over the platform 1 to detect a spectacle, a slider 4 fabricated in between the platform 1 and a U-shaped link 5 to slide the link 5 for accommodating the spectacle, two clippers 6 attached on the platform 1 via two ball and socket joints for getting positioned in proximity of temples of the spectacles, a flap 11 attached with platform 1 via a drawer arrangement to maintain folding position of spectacle's temples, a screen 7 installed over the platform 1 to receive input commands, a speaker 8 installed over the platform 1 to notify user to wear the spectacles, two U-shaped plates 9 attached over the platform 1 for cleaning the lenses via a fabric wrapped over the plates 9.

No. of Pages : 19 No. of Claims : 6

(12) PATENT APPLICATION PUBLICATION
(19) INDIA
(22) Date of filing of Application :27/03/2024
(21) Application No.202411024881 A
(43) Publication Date : 07/11/2025

(54) Title of the invention : RESIN COLLECTING ASSISTIVE DEVICE

(51) International classification	:H04N0005225000, B05B0013020000, F16D0027105000, H04N0005247000, H04N0005232000	(71)**Name of Applicant :** **1)Chandigarh University** Address of Applicant :National Highway 95, Chandigarh-Ludhiana Highway, Mohali, Punjab 140413, India. Mohali Punjab India **2)Chandigarh University Technology Business Incubator**
(31) Priority Document No	:NA	(72)**Name of Inventor :**
(32) Priority Date	:NA	**1)Beant Kaur**
(33) Name of priority country	:NA	
(86) International Application No	:NA	
Filing Date	:NA	
(87) International Publication No	: NA	
(61) Patent of Addition to Application Number	:NA	
Filing Date	:NA	
(62) Divisional to Application Number	:NA	
Filing Date	:NA	

(57) Abstract :
A resin collecting assistive device, comprising a platform 1 developed to be positioned on a surface, multiple omnidirectional wheels 2 installed beneath the platform 1 for manoeuvring the platform 1 over the surface, an artificial intelligence based image capturing module 3 for capturing multiple images of surroundings, an L-shaped telescopic rod 4 installed on platform 1 for extending and positioning an elongated sharp conical member 5 in proximity to surface of the tree, a motorized crank shaft arrangement 6 for proving a reciprocating motion to the member 5 over the surface of the tree to make a hole within the tree, a tactile sensor for determining hardness of the surface of the tree, an electromagnetic spring 7 for generating an additional force over the surface, a moisture sensor for determining presence of moisture over surface of tree, a heating unit for vaporizing the moisture from surface.

No. of Pages : 16 No. of Claims : 4

(12) PATENT APPLICATION PUBLICATION
(21) Application No.202411024896 A
(19) INDIA
(22) Date of filing of Application :27/03/2024
(43) Publication Date : 07/11/2025

(54) Title of the invention : SMART MOBILE PHONE HOLDING DEVICE

(51) International classification	:H04M0001020000, G06F0021880000, E05B0047000000, G06F0003048100, G06F0001160000	(71)**Name of Applicant :** **1)Chandigarh University** Address of Applicant :National Highway 95, Chandigarh-Ludhiana Highway, Mohali, Punjab 140413, India. Mohali Punjab India **2)Chandigarh University Technology Business Incubator**
(31) Priority Document No	:NA	(72)**Name of Inventor :**
(32) Priority Date	:NA	**1)Avinash Kumar Pandey**
(33) Name of priority country	:NA	
(86) International Application No	:NA	
Filing Date	:NA	
(87) International Publication No	: NA	
(61) Patent of Addition to Application Number	:NA	
Filing Date	:NA	
(62) Divisional to Application Number	:NA	
Filing Date	:NA	

(57) Abstract :
A smart mobile phone holding device, comprising a body 1 configured with a flap 2 via a motorized hinge developed to accommodate a mobile phone, wherein the flap 2 is adapted for covering screen of the phone, a fingerprint scanner 3 mapped on the body 1 that is accessed by a user for imprinting the fingerprints, a speaker 4 mounted on the body 1, wherein in case of unauthorized access of the fingerprints, the microcontroller activates a clasp 5 hinged with the body 1 to fasten the phone in order to prevent access to the phone to the unauthorized user and an inflatable bag 6 connected to the body 1 for inflating to absorb the impact over the phone thereby preventing damage to the phone.

No. of Pages : 15 No. of Claims : 4

(12) PATENT APPLICATION PUBLICATION
(21) Application No.202411024897 A
(19) INDIA
(22) Date of filing of Application :27/03/2024
(43) Publication Date : 07/11/2025

(54) Title of the invention : EARTHQUAKE-PROOF SLEEPING ASSISTIVE DEVICE

(51) International classification	:A61B0005000000, A01K0001035000, F25D0029000000, A61B0005145000, G10L0015280000
(31) Priority Document No	:NA
(32) Priority Date	:NA
(33) Name of priority country	:NA
(86) International Application No	:NA
Filing Date	:NA
(87) International Publication No	: NA
(61) Patent of Addition to Application Number	:NA
Filing Date	:NA
(62) Divisional to Application Number	:NA
Filing Date	:NA

(71)**Name of Applicant :**
1)Chandigarh University
Address of Applicant :National Highway 95, Chandigarh-Ludhiana Highway, Mohali, Punjab 140413, India. Mohali Punjab India
2)Chandigarh University Technology Business Incubator
(72)**Name of Inventor :**
1)Rashi Tyagi

(57) Abstract :
An earthquake-proof sleeping assistive device comprises a cuboidal hollow body 1 installed with a pair of platforms 2 connected with each other, a vibration sensor for detecting vibrations in the ground surface, a pair of motorized hinges 3 for tilting the platfroms away from each other, an inflatable member 4 paired with an air compressor 5, for inflating the member 4 thus preventing any chances of injury to user, a pair of plates 6 via a pair of motorized sliders 7, an oxygen sensor for detecting oxygen level within the body 1, plurality of iris pores 8 configured with the body 1 to open for maintaining appropriate ventilation within body 1, a chamber 9 stored with food for allowing the user to consume food, a temperature sensor for detecting temperature in surroundings and a cushion pad 11 for providing comfort to user.

No. of Pages : 15 No. of Claims : 7

(12) PATENT APPLICATION PUBLICATION
(21) Application No.202411024898 A
(19) INDIA
(22) Date of filing of Application :27/03/2024
(43) Publication Date : 07/11/2025

(54) Title of the invention : A DEVICE FOR WRAPPING AN INSULATION ON A PIPE

(51) International classification	:H02J0007000000, B65G0001137000, B08B0003020000, B62B0005020000, B41J0029020000
(31) Priority Document No	:NA
(32) Priority Date	:NA
(33) Name of priority country	:NA
(86) International Application No	:NA
Filing Date	:NA
(87) International Publication No	: NA
(61) Patent of Addition to Application Number	:NA
Filing Date	:NA
(62) Divisional to Application Number	:NA
Filing Date	:NA

(71)**Name of Applicant :**
1)Chandigarh University
Address of Applicant :National Highway 95, Chandigarh-Ludhiana Highway, Mohali, Punjab 140413, India. Mohali Punjab India
2)Chandigarh University Technology Business Incubator
(72)**Name of Inventor :**
1)Ranvijay Kumar

(57) Abstract :
A device for wrapping an insulation on a pipe comprises of a base platform 1 having four telescopic legs with tri-wheel 2 assemblies it their ends, for moving over plain surface and stairs, a robotic arm 3 having a motorized grinding wheel 10 at its end provided on the platform 1 to remove corrosion, a telescopic arm 4 having a nozzle 5 at its end connected to a tank for spraying a primer solution, a main arm 6 attached on the platform 1 having a ring 7, a primary roller 8 attached to the ring 7 having a first spool of an insulation material, a secondary roller 9 attached to the ring 7 having a spool of a cladding material, an artificial intelligence-based imaging unit installed on the base platform 1 to scan for bend sections in the pipe.

No. of Pages : 19 No. of Claims : 5

(12) PATENT APPLICATION PUBLICATION
(21) Application No.202411024899 A
(19) INDIA
(22) Date of filing of Application :27/03/2024
(43) Publication Date : 07/11/2025

(54) Title of the invention : AUTOMATED WASTE-LEAVES COLLECTION DEVICE

(51) International classification	:A01D0046260000, A01G0007060000, H01M0008027300, G06F0003048830, A61H0023020000	(71)**Name of Applicant :** **1)Chandigarh University** Address of Applicant :National Highway 95, Chandigarh-Ludhiana Highway, Mohali, Punjab 140413, India. Mohali Punjab India **2)Chandigarh University Technology Business Incubator**
(31) Priority Document No	:NA	(72)**Name of Inventor :**
(32) Priority Date	:NA	**1)Manish Kumar Pandey**
(33) Name of priority country	:NA	
(86) International Application No	:NA	
Filing Date	:NA	
(87) International Publication No	: NA	
(61) Patent of Addition to Application Number	:NA	
Filing Date	:NA	
(62) Divisional to Application Number	:NA	
Filing Date	:NA	

(57) Abstract :
An automated waste-leaves collection device, comprising a pair of semicircular frames 1 developed to be positioned in proximity to a tree, an imaging unit 2 to determine dimensions of trunk of the tree, a drawer arrangement 3 integrated in the frame to increase/decrease dimensions of frames 1 for enabling a user to accommodate the frames 1 around the trunk, plurality of electromagnets 4 are arranged on ends of frame for engaging the frames 1 together in view of securing the frames 1 on the trunk of the tree, an anemometer 5 for determining windy weather conditions in surroundings of the tree, an inverted canopy-like structure 6 is arranged on lower periphery in a manner that falling leaves are collected on the structure 6 and a vibrating unit 7 to produce vibrational sensations for gathering the collected leaves at one position on the structure 6.

No. of Pages : 17 No. of Claims : 5

(12) PATENT APPLICATION PUBLICATION
(21) Application No.202411024900 A
(19) INDIA
(22) Date of filing of Application :27/03/2024
(43) Publication Date : 07/11/2025

(54) Title of the invention : AUTOMATED EDIBLES FRYING DEVICE

(51) International classification	:G01N0015140000, G06F0003160000, A47J0037120000, A21B0005080000, H04W0004029000
(31) Priority Document No	:NA
(32) Priority Date	:NA
(33) Name of priority country	:NA
(86) International Application No	:NA
Filing Date	:NA
(87) International Publication No	: NA
(61) Patent of Addition to Application Number	:NA
Filing Date	:NA
(62) Divisional to Application Number	:NA
Filing Date	:NA

(71)**Name of Applicant :**
1)Chandigarh University
Address of Applicant :National Highway 95, Chandigarh-Ludhiana Highway, Mohali, Punjab 140413, India. Mohali Punjab India
2)Chandigarh University Technology Business Incubator
(72)**Name of Inventor :**
1)Vaseem Raja

(57) Abstract :
An automated edibles frying device, comprises of a container 1 developed to be positioned over a burner, an inverted U-shaped frame 2 for accommodating edibles for frying, an artificial intelligence-based imaging unit 3 or capturing and processing multiple images in vicinity of the container 1, a meshed sieve 4 accommodating the fried edibles, a pair of motorized sliding units 5 to translate the sieve 4 towards inside of the container 1, plurality of motorized hinges 6 to tilt portions of the sieve 4, a pair of motorized ball and socket to provide angular movement of the sieve 4, an extendable link for positioning the sieve 4 in a forward direction, a tray 8 over which the sieve 4 is positioned, a speaker 9 to produce audio notification for the user to turn off flame of the burner in order to maintain an optimum temperature of the oil.

No. of Pages : 16 No. of Claims : 3

(12) PATENT APPLICATION PUBLICATION
(21) Application No.202411024901 A
(19) INDIA
(22) Date of filing of Application :27/03/2024
(43) Publication Date : 07/11/2025

(54) Title of the invention : DEVICE FOR TWISTING A METAL STRIP

(51) International classification	:B66F0009180000, G01V0003100000, F16M0013020000, G01B0011060000, B08B0001000000
(31) Priority Document No	:NA
(32) Priority Date	:NA
(33) Name of priority country	:NA
(86) International Application No	:NA
Filing Date	:NA
(87) International Publication No	: NA
(61) Patent of Addition to Application Number	:NA
Filing Date	:NA
(62) Divisional to Application Number	:NA
Filing Date	:NA

(71)**Name of Applicant :**
1)Chandigarh University
Address of Applicant :National Highway 95, Chandigarh-Ludhiana Highway, Mohali, Punjab 140413, India. Mohali Punjab India
2)Chandigarh University Technology Business Incubator
(72)**Name of Inventor :**
1)Ranvijay Kumar

(57) Abstract :
A device for twisting a metal strip, comprises a rectangular base 1 having four anchor plates 7 at its bottom for fixing on a ground surface, two pair of overlapping sliding C-shaped clamps 8 provided on slider on two ends of the base 1 to grip the metal strip as per a thickness of the strip, telescopic arm with a hinge joint 4 having a gripper 9 at its end, provided on a guide rail on an edge of the base 1 for carrying the metal strip and sliding the strip into the two pair of C-shaped clamps 8, an ultrasonic sensor for detecting the thickness of the metal strip, a proximity sensor for detecting the presence of the metal strip, and a laser sensor for detecting the engagement of the metal strip with the bracket 3 and the completion of the twisting.

No. of Pages : 16 No. of Claims : 5

(12) PATENT APPLICATION PUBLICATION
(21) Application No.202411024902 A
(19) INDIA
(22) Date of filing of Application :27/03/2024
(43) Publication Date : 07/11/2025

(54) Title of the invention : ADJUSTABLE KNEE SUPPORTING DEVICE

(51) International classification :A61F5/01
(31) Priority Document No :NA
(32) Priority Date :NA
(33) Name of priority country :NA
(86) International Application No :NA
Filing Date :NA
(87) International Publication No : NA
(61) Patent of Addition to Application Number :NA
Filing Date :NA
(62) Divisional to Application Number :NA
Filing Date :NA

(71)**Name of Applicant :**
1)Chandigarh University
Address of Applicant :National Highway 95, Chandigarh-Ludhiana Highway, Mohali, Punjab 140413, India. Mohali Punjab India
2)Chandigarh University Technology Business Incubator
(72)**Name of Inventor :**
1)Manjot Kaur

(57) Abstract :
An adjustable knee supporting device comprises a curved frame 1 accessed by a user for positioned the user's knee, an artificial intelligence-based imaging unit 2 installed on the frame 1 determine dimensions of the user's knee, multiple telescopically operated links 3 integrated in the frame 1 for properly accommodating the user's knee, a pair of motorized rollers 4 arranged on lateral sides of the frame 1 for wrapping/unwrapping a strap 5 coiled on the rollers, plurality of hooks integrated on one end of the strap 5 engaged by multiple pins integrated with plurality of hinges 6 to tilt portions of the pins, and a microphone 7 integrated on the frame 1 for receiving voice command of the user for regarding movement of the frame 1.

No. of Pages : 15 No. of Claims : 4

(12) PATENT APPLICATION PUBLICATION
(21) Application No.202411024903 A
(19) INDIA
(22) Date of filing of Application :27/03/2024
(43) Publication Date : 07/11/2025

(54) Title of the invention : AUTOMATED TILE SPACER INSTALLATION DEVICE

(51) International classification	:A61B0090000000, A44B0019580000, G02F0001133900, G05D0001000000, E04F0015020000	(71)**Name of Applicant :** **1)Chandigarh University** Address of Applicant :National Highway 95, Chandigarh-Ludhiana Highway, Mohali, Punjab 140413, India. Mohali Punjab India **2)Chandigarh University Technology Business Incubator**
(31) Priority Document No	:NA	(72)**Name of Inventor :**
(32) Priority Date	:NA	**1)Harbinder Singh**
(33) Name of priority country	:NA	
(86) International Application No	:NA	
Filing Date	:NA	
(87) International Publication No	: NA	
(61) Patent of Addition to Application Number	:NA	
Filing Date	:NA	
(62) Divisional to Application Number	:NA	
Filing Date	:NA	

(57) Abstract :
An automated tile spacer installation device, comprising a housing 1 positioned over a ground surface layered with tiles, touch interactive display panel 3 enable a user to provide input regrading installation of tile spacers in between the tiles to maintain a specific distance in between the tiles, artificial intelligence based imaging unit 4 for capturing images of said tiles to determine dimension of intermediate space of the tiles, Omni-directional wheels 2 provide translation to the housing 1 over the tiles and position over the detected gapping, chamber 5 for storing tile spacers, robotic gripper 6 to accesses the chamber 5 to withdraw one of the spacer and mount in the gapping at a pre-defined distance, motorized cutter 7 to cut detected portion of the mounted spacers, container 9 stored with grout filler mixture and electronic nozzle 10 to dispense a regulate amount of the mixture within the gapping.

No. of Pages : 16 No. of Claims : 5

(12) PATENT APPLICATION PUBLICATION
(21) Application No.202411024904 A
(19) INDIA
(22) Date of filing of Application :27/03/2024
(43) Publication Date : 07/11/2025

(54) Title of the invention : ADAPTABLE ENGINE OIL PAN MAINTENANCE ASSISTIVE DEVICE

(51) International classification	:F01M0011040000, F01M0011000000, F02B0077040000, B08B0009049000, B41J0002165000	(71)**Name of Applicant :** **1)Chandigarh University** Address of Applicant :National Highway 95, Chandigarh-Ludhiana Highway, Mohali, Punjab 140413, India. Mohali Punjab India **2)Chandigarh University Technology Business Incubator**
(31) Priority Document No	:NA	(72)**Name of Inventor :**
(32) Priority Date	:NA	**1)Vinay Kumar**
(33) Name of priority country	:NA	
(86) International Application No	:NA	
Filing Date	:NA	
(87) International Publication No	: NA	
(61) Patent of Addition to Application Number	:NA	
Filing Date	:NA	
(62) Divisional to Application Number	:NA	
Filing Date	:NA	

(57) Abstract :
An adaptable engine oil pan maintenance assistive device, comprises of a cylindrical body 1 developed to be positioned in proximity to oil pan of a vehicle's engine, an artificial intelligence-based imaging unit 2 for capturing and processing multiple images in vicinity of the body 1 in order to determine position of an oil drain plug, a robotic arm 3 to acquire a grip of the plug, a telescopically operated rod 4 for positioning an optical sensor, an electronically controlled nozzle 6 by means of a conduit to dispense a cleaning solution, a robotic link 9 for positioning hose of the suction pump 8, a suction pump 8 for extracting remaining residues from the oil pan, a waste container 10 for collecting remaining residues from the oil pan, an air blower 11 to provide a pressurized blow of air in the pan.

No. of Pages : 16 No. of Claims : 3

(12) PATENT APPLICATION PUBLICATION
(21) Application No.202411024937 A
(19) INDIA
(22) Date of filing of Application :27/03/2024
(43) Publication Date : 07/11/2025

(54) Title of the invention : AUTOMATED CLOTH REPAIRING DEVICE

(51) International classification	:B25J0019020000, B25J0009160000, B65G0023080000, H04L0012460000, G06F0003041000	(71)**Name of Applicant :** **1)Chandigarh University** Address of Applicant :National Highway 95, Chandigarh-Ludhiana Highway, Mohali, Punjab 140413, India. Mohali Punjab India **2)Chandigarh University Technology Business Incubator**
(31) Priority Document No	:NA	(72)**Name of Inventor :**
(32) Priority Date	:NA	**1)Satarupa Mitra**
(33) Name of priority country	:NA	
(86) International Application No	:NA	
Filing Date	:NA	
(87) International Publication No	: NA	
(61) Patent of Addition to Application Number	:NA	
Filing Date	:NA	
(62) Divisional to Application Number	:NA	
Filing Date	:NA	

(57) Abstract :
An automated cloth repairing device, comprising a platform 1 positioned over a fixed surface by means of plurality of suction cups 2, a primary ring 3 configured with platform 1 by means of a pair of links 4 in which a user to position a cloth with a hole over ring, a touch interactive display panel 5 provides input regrading repairing of hole, an artificial intelligence based imaging unit 6 determines dimension of hole over cloth, a secondary ring 7 is aligned around primary ring 3 to affix cloth within rings, a motorized cylindrical member 9 configured over rings by means of an inverted L-shaped pole 10, a motorized roller 11 unwraps thread of detected color, a cavity 12 crafted at bottom portion to protrude over of corresponding section and gripped by a robotic gripper 13 and insert in a needle to perform sewing over hole.

No. of Pages : 16 No. of Claims : 5

(12) PATENT APPLICATION PUBLICATION
(21) Application No.202411024938 A
(19) INDIA
(22) Date of filing of Application :27/03/2024
(43) Publication Date : 07/11/2025

(54) Title of the invention : DEVICE FOR LAYING OF BRICKS

(51) International classification	:E04G0021180000, E01C0019520000, E04G0021200000, G05D0001020000, G02F0001133500
(31) Priority Document No	:NA
(32) Priority Date	:NA
(33) Name of priority country	:NA
(86) International Application No	:NA
Filing Date	:NA
(87) International Publication No	: NA
(61) Patent of Addition to Application Number	:NA
Filing Date	:NA
(62) Divisional to Application Number	:NA
Filing Date	:NA

(71)**Name of Applicant :**
1)Chandigarh University
Address of Applicant :National Highway 95, Chandigarh-Ludhiana Highway, Mohali, Punjab 140413, India. Mohali Punjab India
2)Chandigarh University Technology Business Incubator
(72)**Name of Inventor :**
1)Dr. Aditya Kumar Tiwary

(57) Abstract :
A device for laying of bricks, comprises a vertical cylindrical housing 1 containing a stack of bricks on a circular base plate 2 having four omnidirectional motorized wheels 3, an elongated slotted plate 5 sliding bricks on slotted plate 5, an L-shaped telescopic arm 10 having a clamp 13 , a robotic arm 11 having a sharp scrapper plate 12 leveling , imaging unit 6 scan laying location of brick identify a laying location having an irregular shape a actuate a robotic link 14 provided on base plate 2 having a motorized cutting wheel 15 at its end cut brick as per laying location and a sensing module detects a position of laid bricks determine laying position of a next brick.

No. of Pages : 18 No. of Claims : 5

(12) PATENT APPLICATION PUBLICATION
(21) Application No.202411024939 A
(19) INDIA
(22) Date of filing of Application :27/03/2024
(43) Publication Date : 07/11/2025

(54) Title of the invention : AUTOMATED TOOL SUPPORTING DEVICE

(51) International classification	:G10L0015220000, A61B0017020000, A61F0005020000, A61B0017000000, A61B0090500000
(31) Priority Document No	:NA
(32) Priority Date	:NA
(33) Name of priority country	:NA
(86) International Application No	:NA
Filing Date	:NA
(87) International Publication No	: NA
(61) Patent of Addition to Application Number	:NA
Filing Date	:NA
(62) Divisional to Application Number	:NA
Filing Date	:NA

(71)**Name of Applicant :**
1)Chandigarh University
Address of Applicant :National Highway 95, Chandigarh-Ludhiana Highway, Mohali, Punjab 140413, India. Mohali Punjab India
2)Chandigarh University Technology Business Incubator
(72)**Name of Inventor :**
1)Lochan Sharma

(57) Abstract :
An automated tool supporting device comprising, an extendable elongated body 1 having top and bottom end accessed by a user to position the bottom end on proximity to waist portion of user, a pair of C-shaped extendable members 3 configured with bottom portion to accommodate waist portion within member, an artificial intelligence based imaging unit 2 installed over body 1 determines dimension of user and user's waist portion, a motorized drawer arrangement installed in each of members 3 and body 1 to provide appropriate extension and retraction to members 3 and body 1 for accommodating waist portion within members, a microphone 5 installed over body 1 to receive voice command of user regrading requirement of support for a tool held by user, a pair of telescopic rods 6 configured over top end to extend and position a motorized roller attached with each of rod over tool.

No. of Pages : 18 No. of Claims : 5

(12) PATENT APPLICATION PUBLICATION
(21) Application No.202411024940 A
(19) INDIA
(22) Date of filing of Application :27/03/2024
(43) Publication Date : 07/11/2025

(54) Title of the invention : AUTOMATED CONSTRUCTION BRICK SOAKING DEVICE

(51) International classification	:G06F0003010000, G06F0003030000, H04N0005232000, B25J0011000000, E04G0021220000
(31) Priority Document No	:NA
(32) Priority Date	:NA
(33) Name of priority country	:NA
(86) International Application No	:NA
Filing Date	:NA
(87) International Publication No	: NA
(61) Patent of Addition to Application Number	:NA
Filing Date	:NA
(62) Divisional to Application Number	:NA
Filing Date	:NA

(71)**Name of Applicant :**
1)Chandigarh University
Address of Applicant :National Highway 95, Chandigarh-Ludhiana Highway, Mohali, Punjab 140413, India. Mohali Punjab India
2)Chandigarh University Technology Business Incubator
(72)**Name of Inventor :**
1)Harbinder Singh

(57) Abstract :
An automated construction brick soaking device, comprising a body 1 positioned on a fixed surface, a display panel 2 installed on the body 1 for user input, an imaging unit 3 to determine positioning of bricks, robotic arm 4 installed on the body 1 to grip and accommodate one of the brick on the body 1, an ultrasonic sensor integrated on the body 1 for monitoring dimensions of the accommodated brick, a hydraulic plunger 7 arranged on the body 1 via a L-shaped bar 5 to position a blade 6 over a particular position at the brick, blade 6 integrated on the plunger 7 to cut the brick, an electronically controlled nozzle is integrated inside the chamber 8 to dispense pressurized water in the chamber 8.

No. of Pages : 16 No. of Claims : 3

(12) PATENT APPLICATION PUBLICATION
(21) Application No.202411024968 A
(19) INDIA
(22) Date of filing of Application :27/03/2024
(43) Publication Date : 07/11/2025

(54) Title of the invention : HANDLEBAR OF A VEHICLE

(51) International classification	:B62K0023060000, B62L0003020000, B62K0021260000, A61B0017064000, E05B0081240000	(71)**Name of Applicant :** **1)Hero MotoCorp Limited** Address of Applicant :The Grand Plaza, Plot No.2, Nelson Mandela Road, Vasant Kunj- Phase –II, New Delhi, Delhi 110070, India Delhi Delhi India
(31) Priority Document No	:NA	(72)**Name of Inventor :** **1)SINGH, Khushmeet**
(32) Priority Date	:NA	**2)MORE, Akash Babasaheb**
(33) Name of priority country	:NA	
(86) International Application No	:NA	
Filing Date	:NA	
(87) International Publication No	: NA	
(61) Patent of Addition to Application Number	:NA	
Filing Date	:NA	
(62) Divisional to Application Number	:NA	
Filing Date	:NA	

(57) Abstract :
The present invention discloses a handlebar (110) of a vehicle (100). The vehicle includes a bridge fork member (202), a first adjusting bolt member (302), and a second adjusting bolt member (402). The first adjusting bolt member and the second adjusting bolt member are threadedly engaged with a left handlebar member (210) and a right handlebar member (212), respectively. The first and second adjusting bolt members are rotatably operated to allow the left and right handlebar members to traverse between a first predetermined length (L1) and a second predetermined length (L2). Further, releasably engaging a first stopper member (304) and a second stopper member (404) to the corresponding first adjusting bolt member and the second adjusting bolt member prevents the first adjusting bolt member and the second adjusting bolt member from being unsecured from a left mounting provision (204) and a right mounting provision (206).

No. of Pages : 37 No. of Claims : 10

(12) PATENT APPLICATION PUBLICATION
(21) Application No.202411024905 A
(19) INDIA
(22) Date of filing of Application :27/03/2024
(43) Publication Date : 07/11/2025

(54) Title of the invention : HAND-HELD ROCK/ STONE HOLDING DEVICE

(51) International classification	: B25B1/12, B25B1/24, B25B5/14, B28D7/04, G06T7/00, B25J19/02, B25J15/00, G03H1/22	(71)**Name of Applicant :** **1)Chandigarh University** Address of Applicant :National Highway 95, Chandigarh-Ludhiana Highway, Mohali, Punjab 140413, India. Mohali Punjab India **2)Chandigarh University Technology Business Incubator** (72)**Name of Inventor :** **1)Meenakshi Verma**
(31) Priority Document No	:NA	
(32) Priority Date	:NA	
(33) Name of priority country	:NA	
(86) International Application No	:NA	
Filing Date	:NA	
(87) International Publication No	: NA	
(61) Patent of Addition to Application Number	:NA	
Filing Date	:NA	
(62) Divisional to Application Number	:NA	
Filing Date	:NA	

(57) Abstract :
A hand-held rock/ stone holding device, comprising an oval-shaped body 1 developed to be hand-held by a user, a motorized iris lid 2 installed on the body 1 for allowing the user to place a rock/ stone within the body 1, an artificial intelligence-based imaging unit 3 installed on the body 1 for detecting presence of rock/ stones, a holographic projection unit 4 configured on the body 1 for guiding the user regarding the detected rock/ stone, a microphone 5 embedded within the body 1 for receiving voice commands of the user, an ignition unit 6 configured on the body 1 for generating a spark, thereby aiding the user in igniting a fire, a hammering unit 7 configured on the body 1 for breaking the rock/ stone and a speaker 8 mounted on the body 1 for notifying the user regarding the detected weight.

No. of Pages : 14 No. of Claims : 5

(12) PATENT APPLICATION PUBLICATION
(21) Application No.202411024906 A
(19) INDIA
(22) Date of filing of Application :27/03/2024
(43) Publication Date : 07/11/2025

(54) Title of the invention : ADAPTABLE CORN-KERNELS ROASTING ASSISTIVE DEVICE

(51) International classification	:G02B0021260000, F16H0025200000, H05B0006120000, A61F0002915000, A61F0002910000
(31) Priority Document No	:NA
(32) Priority Date	:NA
(33) Name of priority country	:NA
(86) International Application No	:NA
Filing Date	:NA
(87) International Publication No	: NA
(61) Patent of Addition to Application Number	:NA
Filing Date	:NA
(62) Divisional to Application Number	:NA
Filing Date	:NA

(71)**Name of Applicant :**
1)Chandigarh University
Address of Applicant :National Highway 95, Chandigarh-Ludhiana Highway, Mohali, Punjab 140413, India. Mohali Punjab India
2)Chandigarh University Technology Business Incubator
(72)**Name of Inventor :**
1)Chandra Kumar

(57) Abstract :
An adaptable corn-kernels roasting assistive device comprise of plurality of suction cups 2 are arranged underneath the platform 1 for securing the platform 1, plurality of skewer rods 3 arranged on first frame enabling a user to accommodate maize, an artificial intelligence-based imaging unit 4 installed on the platform 1 for capturing and processing images of the platform 1, plurality of heating coils 5 arranged underneath the rods to provide heat, a motorized ball and socket joint 6 integrated with the rod for providing rotating movement, plurality of expandable cylindrical members 7 arranged on the frame for increasing/decreasing dimensions of the member, a linear actuator 8 installed between rods and the first frame for providing pushing force, plurality of curved blades 9 arranged on inner periphery of the member to provide converging/diverging movement, a motorized flap 10 integrated on bottom of the member allowing the stripped kernels to get collected.

No. of Pages : 17 No. of Claims : 5

(12) PATENT APPLICATION PUBLICATION
(21) Application No.202411024907 A
(19) INDIA
(22) Date of filing of Application :27/03/2024
(43) Publication Date : 07/11/2025

(54) Title of the invention : ADAPTABLE SEED EXTRACTING ASSISTIVE DEVICE FOR DRUPE FRUITS

(51) International classification	:B25J0009160000, B25J0018020000, B25J0019020000, A23N0004040000, B25J0015100000
(31) Priority Document No	:NA
(32) Priority Date	:NA
(33) Name of priority country	:NA
(86) International Application No	:NA
Filing Date	:NA
(87) International Publication No	: NA
(61) Patent of Addition to Application Number	:NA
Filing Date	:NA
(62) Divisional to Application Number	:NA
Filing Date	:NA

(71)**Name of Applicant :**
1)Chandigarh University
Address of Applicant :National Highway 95, Chandigarh-Ludhiana Highway, Mohali, Punjab 140413, India. Mohali Punjab India
2)Chandigarh University Technology Business Incubator
(72)**Name of Inventor :**
1)Nadeem Rao

(57) Abstract :
An adaptable seed extracting assistive device for drupe fruits, comprises a cylindrical body 1 developed to be positioned on a fixed surface, a pair of suction cups 2 adheres to surface, a microphone 3 accessed by the user give input commands, an imaging unit 4 captures images of the vicinity, a telescopically operated rod 5 extends and retracts to adjust with user's height, a pair of plates 6 accommodates fruit, a linear actuator extends/retracts for inserting an elongated pin 7 integrated with the actuator to remove seed, a robotic gripper 8 acquires a grip of lateral ends of the fruit, a container 9 collects seedless fruit, a speaker 10 notifies the user to collect seedless fruit, a curved slider lid deploy for getting positioned over the plates 6 to cover the device.

No. of Pages : 16 No. of Claims : 6

(12) PATENT APPLICATION PUBLICATION
(19) INDIA
(22) Date of filing of Application :27/03/2024
(21) Application No.202411024911 A
(43) Publication Date : 07/11/2025

(54) Title of the invention : AUTOMATED EDIBLE WRAPPING DEVICE

(51) International classification	:G02B0006440000, B65G0023080000, H02G0011000000, A23P0020200000, A01J0005003000	(71)**Name of Applicant :** **1)Chandigarh University** Address of Applicant :National Highway 95, Chandigarh-Ludhiana Highway, Mohali, Punjab 140413, India. Mohali Punjab India **2)Chandigarh University Technology Business Incubator**
(31) Priority Document No	:NA	(72)**Name of Inventor :**
(32) Priority Date	:NA	**1)Sheetal Thakur**
(33) Name of priority country	:NA	
(86) International Application No	:NA	
Filing Date	:NA	
(87) International Publication No	: NA	
(61) Patent of Addition to Application Number	:NA	
Filing Date	:NA	
(62) Divisional to Application Number	:NA	
Filing Date	:NA	

(57) Abstract :
An automated edible wrapping device, comprising a frame 1 developed to be positioned on a fixed surface, plate 2 that is accessed by a user for accommodating an edible which is to be wrapped, artificial intelligence-based imaging unit 3 for capturing images in vicinity of the frame 1 to determine dimensions of the accommodated edible, motorized roller 4 rotate for unwrapping a foil coiled on the roller 4, motorized gripper 5 integrated with a cutter 6 to cut the foil, a robotic arm 7 to grip and uplift the edible from the plate 2, telescopically operated L-shaped link 8 to extend for getting positioned in proximity to extra length of the foil, flap 9 integrated on the link 8 by means of a motorized hinge joint 10 to tilt the flap 9 for folding excess length of foil onto the edible in order to cover the edible with the foil.

No. of Pages : 14 No. of Claims : 3

(12) PATENT APPLICATION PUBLICATION
(21) Application No.202411025283 A
(19) INDIA
(22) Date of filing of Application :28/03/2024
(43) Publication Date : 07/11/2025

(54) Title of the invention : SLIDING GRASS CUTTING TOOL

(51) International classification	:A01D0101000000, A01D0034416000, A61B0017040000, A01D0034900000, B26B0013260000
(31) Priority Document No	:NA
(32) Priority Date	:NA
(33) Name of priority country	:NA
(86) International Application No	:NA
Filing Date	:NA
(87) International Publication No	: NA
(61) Patent of Addition to Application Number	:NA
Filing Date	:NA
(62) Divisional to Application Number	:NA
Filing Date	:NA

(71)**Name of Applicant :**
1)Harish Chandra Kothari
Address of Applicant :Kuwan Khera, Udham Singh Nagar, Bhura kishni, Uttarakhand, 262308 Udham Singh Nagar Uttarakhand India
(72)**Name of Inventor :**
1)Tarun Kothari

(57) Abstract :
The invention provides a sliding grass cutting tool. The grass cutting tool comprising an upper handle (1) for secure hand gripping, a middle handle (3) placed beneath the upper handle, with a connecting rod (2) linking the upper handle (1) and the middle handle (3) and a supporting arm (4) to which a blade support (5) is affixed, the supporting arm (4) strategically placed for structural support and to facilitate controlled movement while cutting grass. Further, a cutting blade (6) firmly supported by the blade support (5), featuring a curved profile for maximum grass cutting within the blade range.

No. of Pages : 12 No. of Claims : 5

(12) PATENT APPLICATION PUBLICATION
(21) Application No.202411025284 A
(19) INDIA
(22) Date of filing of Application :28/03/2024
(43) Publication Date : 07/11/2025

(54) Title of the invention : A CAR DOOR OPENING SIGNAL SYSTEM

(51) International classification	:G01S0015931000, F02D0041020000, B60R0021013400, B60N0003100000, F21Y0115100000	(71)**Name of Applicant :** **1)Nirmala** Address of Applicant :789/5, Gali no.13, Oppo. Bhati Market, Mandoli Ext., Delhi, 110093 East Delhi Delhi India (72)**Name of Inventor :** **1)Anmol Upadhyay**
(31) Priority Document No	:NA	
(32) Priority Date	:NA	
(33) Name of priority country	:NA	
(86) International Application No	:NA	
Filing Date	:NA	
(87) International Publication No	: NA	
(61) Patent of Addition to Application Number	:NA	
Filing Date	:NA	
(62) Divisional to Application Number	:NA	
Filing Date	:NA	

(57) Abstract :
The invention provides a system for secure car door opening. The system comprises a push button integrated into the car handle, whereby pressing the button initiates a circuit, a plurality of sensors (6) positioned on the rear side of the car, with the circuit designed to activate the sensors (6) for measuring the distance between the car and other vehicles (2) before initiating the car door (5) opening. A Neon LED board (1) situated at the rear of the car, activating, and emitting a red light to signify the impending car door (5) opening upon circuit activation, and a display screen (4) placed on the car's dashboard, activated by the circuit to showcase the distance between the car and surrounding objects/vehicles (2), ensuring a secure door (5) opening.

No. of Pages : 13 No. of Claims : 6

(12) PATENT APPLICATION PUBLICATION
(21) Application No.202411025304 A
(19) INDIA
(22) Date of filing of Application :28/03/2024
(43) Publication Date : 07/11/2025

(54) Title of the invention : AN ACTIVE CLAMP FORWARD DC- DC CONVERTER

(51) International classification	:H02M3/335	(71)**Name of Applicant :**
(31) Priority Document No	:NA	**1)UNO MINDA LIMITED**
(32) Priority Date	:NA	Address of Applicant :Village Nawada Fatehpur, P.O. Sikanderpur Badda, IMT Manesar, Distt. Gurgaon, Haryana - 122004, India Gurgaon Haryana India
(33) Name of priority country	:NA	
(86) International Application No	:NA	(72)**Name of Inventor :**
Filing Date	:NA	**1)Sarika Umesh Gujarathi**
(87) International Publication No	: NA	**2)Girish Balwant Kamble**
(61) Patent of Addition to Application Number	:NA	**3)Homesh Bhanushanker Dave**
Filing Date	:NA	**4)Sujit Sopan Barhate**
(62) Divisional to Application Number	:NA	
Filing Date	:NA	

(57) Abstract :
The present disclosure generally relates to Service Enabler Architecture Layer (SEAL) and spatial mapping management. Particularly, but not exclusively, the present disclosure describes DC-DC converter (105a) comprising a transformer (109) configured to connect with a supply unit to receive supply voltage. The primary side of transformer (109) comprises at least two primary windings. The at least two primary windings includes a first primary winding configured to generate electromagnetic induction based on the received DC supply voltage and a second primary winding. A secondary side of transformer comprises at least two secondary windings electromagnetically coupled to the at least two primary windings. Each of the at least two secondary windings is configured to generate a distinct regulated DC output voltage based on the generated electromagnetic induction at the at least two primary winding. An output voltage of the second primary winding and each secondary winding are coupled to a corresponding auxiliary circuit to supply a regulated DC output voltage. Fig 1.

No. of Pages : 20 No. of Claims : 5

(12) PATENT APPLICATION PUBLICATION
(21) Application No.202411025319 A
(19) INDIA
(22) Date of filing of Application :28/03/2024
(43) Publication Date : 07/11/2025

(54) Title of the invention : SWINGARM OF A VEHICLE

(51) International classification	:B62K25/12, B62K11/00, B60G7/00, B62M17/00
(31) Priority Document No	:NA
(32) Priority Date	:NA
(33) Name of priority country	:NA
(86) International Application No	:NA
Filing Date	:NA
(87) International Publication No	: NA
(61) Patent of Addition to Application Number	:NA
Filing Date	:NA
(62) Divisional to Application Number	:NA
Filing Date	:NA

(71)**Name of Applicant :**
1)Hero MotoCorp Limited
Address of Applicant :The Grand Plaza, Plot No.2, Nelson Mandela Road, Vasant Kunj- Phase –II, New Delhi, Delhi 110070, India Delhi Delhi India
(72)**Name of Inventor :**
1)YADAV, Mukesh Kumar
2)RAVINDER

(57) Abstract :
The present invention discloses a swingarm (136) of a vehicle (100). The swingarm (136) has a first arm (182), a second arm (184), and a support member (180). The support member (180) is extended along a vehicle width direction (W) and adapted to connect the first arm (182) with the second arm (184). The first front portion (186A) and the second front portion (186B) are adapted to pivotably couple to a body frame (102) of the vehicle (100). A first rear portion (188A) of the first arm (182) and a second rear portion (188B) of the second arm (184) are adapted to rotatably support at least one rear ground engaging member (114) of the vehicle (100). A motor (116) of the vehicle (100) is disposed in between the first arm (182) and the second arm (184).

No. of Pages : 31 No. of Claims : 14

(12) PATENT APPLICATION PUBLICATION
(21) Application No.202411025322 A
(19) INDIA
(22) Date of filing of Application :28/03/2024
(43) Publication Date : 07/11/2025

(54) Title of the invention : A method for developing recombinant E. coli DH5a strain

(51) International classification	:C12N0015700000, C12N0009240000, C13K0013000000, C12P0019140000, A61K0035740000	(71)**Name of Applicant :** **1)AMITY UNIVERSITY** Address of Applicant :AMITY UNIVERSITY CAMPUS, SECTOR-125, NOIDA, UTTAR PRADESH, INDIA, 201313 Uttar Pradesh India (72)**Name of Inventor :** **1)Manoj Kumar** **2)Sonam Kumari** **3)Smriti Shrivastava**
(31) Priority Document No	:NA	
(32) Priority Date	:NA	
(33) Name of priority country	:NA	
(86) International Application No	:NA	
Filing Date	:NA	
(87) International Publication No	: NA	
(61) Patent of Addition to Application Number	:NA	
Filing Date	:NA	
(62) Divisional to Application Number	:NA	
Filing Date	:NA	

(57) Abstract :
The present invention discloses a method for developing recombinant E. coli DH5a strain. The present invention discloses an expression construct for heterologous expression of xylanase gene (CUJN21) from Bacillus aerius sp. in Escherichia coli bacterial strain (DH5a). Expression construct (pET-28(a+)-xyn60) has potential of secreting extracellular xylanase, facilitating hydrolysis of extracellular xylan (from pretreated pine needles) to liberate xylose. The DNA construct encodes following structure pET-28(a+)CUJN21. Accompanied Drawing [Figure 1]

No. of Pages : 12 No. of Claims : 7

(12) PATENT APPLICATION PUBLICATION
(21) Application No.202411024912 A
(19) INDIA
(22) Date of filing of Application :27/03/2024
(43) Publication Date : 07/11/2025

(54) Title of the invention : AUTOMATED COCONUT PEELING AND SORTING DEVICE

(51) International classification	: A23N5/08, A47J17/14, G06T7/00, G06F3/0488, G06F3/041, B25J19/02, B25J15/00, F16B47/00	(71)**Name of Applicant :** **1)Chandigarh University** Address of Applicant :National Highway 95, Chandigarh-Ludhiana Highway, Mohali, Punjab 140413, India. Mohali Punjab India **2)Chandigarh University Technology Business Incubator** (72)**Name of Inventor :** **1)Anu Sharma**
(31) Priority Document No	:NA	
(32) Priority Date	:NA	
(33) Name of priority country	:NA	
(86) International Application No	:NA	
Filing Date	:NA	
(87) International Publication No	: NA	
(61) Patent of Addition to Application Number	:NA	
Filing Date	:NA	
(62) Divisional to Application Number	:NA	
Filing Date	:NA	

(57) Abstract :
An automated coconut peeling and sorting device, comprises a platform 1 positioned on a ground surface and installed with a container 2 stored with multiple coconuts, a touch enabled screen 3 enables the user to give input commands, a conveyer 4 translates the coconuts towards plurality of inverted U-shaped members 5, an imaging unit 7 captures images of the coconut, multiple telescopically operated rods 6 extends/retracts to position the members 5 in proximity to the coconuts, a motorized roller 8 rotates in contact with the coconuts to peel the coconut by spokes, telescopically operated gripper 9 grips and positions coconuts in a chamber 10, a Peltier unit cools coconuts, a pair of robotic arms 12 collects coconut from chamber 10, an IR counter counts number of peeled coconuts.

No. of Pages : 19 No. of Claims : 6

(12) PATENT APPLICATION PUBLICATION
(21) Application No.202411024913 A
(19) INDIA
(22) Date of filing of Application :27/03/2024
(43) Publication Date : 07/11/2025

(54) Title of the invention : SECURED TWO-WHEELER ACCOMMODATION DEVICE

(51) International classification	: E04H6/18, G06F21/32, F16B47/00, B25J19/02, B25J15/00	(71)**Name of Applicant :** **1)Chandigarh University** Address of Applicant :National Highway 95, Chandigarh-Ludhiana Highway, Mohali, Punjab 140413, India. Mohali Punjab India **2)Chandigarh University Technology Business Incubator** (72)**Name of Inventor :** **1)Ranjan Walia**
(31) Priority Document No	:NA	
(32) Priority Date	:NA	
(33) Name of priority country	:NA	
(86) International Application No	:NA	
Filing Date	:NA	
(87) International Publication No	: NA	
(61) Patent of Addition to Application Number	:NA	
Filing Date	:NA	
(62) Divisional to Application Number	:NA	
Filing Date	:NA	

(57) Abstract :
A secured two-wheeler accommodation device, comprising a rectangular shaped frame 1 affixed with rear portion of a four wheeler, a microphone 2 installed over the frame 1 to receive voice command of the user regrading accommodation of a two-wheeler, an artificial intelligence based imaging unit 3 installed over the frame 1 to determine length of the two-wheeler, a pair of motorized plates 4 installed with lateral sides of the frame 1 to deploy a pre-defined angle in view of providing appropriate space for accommodating the two-wheeler, a pair of extendable curved links 5 installed with the frame 1 to deploy the links 5 in a manner to pass in between spokes of the two-wheeler and electromagnetic lock 6 is installed over end of the links 5 to attach the links 5 with each other in view of gripping wheels of the two-wheeler via the links 5.

No. of Pages : 16 No. of Claims : 4

(12) PATENT APPLICATION PUBLICATION
(21) Application No.202411024914 A
(19) INDIA
(22) Date of filing of Application :27/03/2024
(43) Publication Date : 07/11/2025

(54) Title of the invention : WOODEN SKIRTING CUTTING AND BENDING DEVICE

(51) International classification	:E04F0019040000, G06F0003010000, B65D0043020000, A61B0001005000, A63F0013214000
(31) Priority Document No	:NA
(32) Priority Date	:NA
(33) Name of priority country	:NA
(86) International Application No	:NA
Filing Date	:NA
(87) International Publication No	: NA
(61) Patent of Addition to Application Number	:NA
Filing Date	:NA
(62) Divisional to Application Number	:NA
Filing Date	:NA

(71)**Name of Applicant :**
1)Chandigarh University
Address of Applicant :National Highway 95, Chandigarh-Ludhiana Highway, Mohali, Punjab 140413, India. Mohali Punjab India
2)Chandigarh University Technology Business Incubator
(72)**Name of Inventor :**
1)Jayaram R

(57) Abstract :
A wooden skirting cutting and bending device, comprising a cylindrical body 1 attached with a handle equipped with plurality of rings 2 for accommodating fingers of a user, a microphone 3 enables user to give voice commands regarding type of operation to be performed on a wooden skirting held by a user, a laser acuity sensor detects diameter of user's fingers, a motorized iris lid grips user's fingers, a speaker 5 notifies user to place skirting on plate 8, an artificial intelligence-based imaging unit 6 detects presence of skirting on plate 8, a motorized circular slider 7 rotates a pair of cylindrical units aligns skirting at an angle, a blade 9 via a motorized hinge 10 for cutting skirting at user-defined angle, and a triangular-shaped unit 11 via an L-shaped telescopically operated link 4 carves a triangular slot in skirting for allowing user to bend skirting.

No. of Pages : 16 No. of Claims : 5

(12) PATENT APPLICATION PUBLICATION
(21) Application No.202411024915 A
(19) INDIA
(22) Date of filing of Application :27/03/2024
(43) Publication Date : 07/11/2025

(54) Title of the invention : HOLE CARVING DEVICE FOR WOODEN WORKPIECE

(51) International classification	:B44B0003060000, B25J0009100000, B44B0003000000, B62B0005000000, B27G0015000000	(71)**Name of Applicant :** **1)Chandigarh University** Address of Applicant :National Highway 95, Chandigarh-Ludhiana Highway, Mohali, Punjab 140413, India. Mohali Punjab India **2)Chandigarh University Technology Business Incubator**
(31) Priority Document No	:NA	(72)**Name of Inventor :**
(32) Priority Date	:NA	**1)Arabinda Meher**
(33) Name of priority country	:NA	
(86) International Application No	:NA	
Filing Date	:NA	
(87) International Publication No	: NA	
(61) Patent of Addition to Application Number	:NA	
Filing Date	:NA	
(62) Divisional to Application Number	:NA	
Filing Date	:NA	

(57) Abstract :
A hole carving device for wooden workpiece, comprising a housing 1 installed with a platform 2 for accommodating a wooden workpiece, a screen 3 to give input commands regarding locations at which holes are to be carved on the workpiece, along with selecting shape and dimensions of the hole, an imaging unit 4 for detecting dimensions of workpiece, plurality of motorized sliders 5 for translating and positioning clamps 6 for gripping workpiece, a telescopically operated gripper 8 for accessing chamber 7 to fetch one of the bits and engage the bits with a motorized wood router 9, a motorized two-axis lead screw arrangement 11 configured between the ceiling portion and rod 10 in view of aligning the wood router 9 over the user-defined location of the workpiece and a speaker 12 for notifying the user to collect the workpiece.

No. of Pages : 18 No. of Claims : 6

(12) PATENT APPLICATION PUBLICATION
(21) Application No.202411025428 A
(19) INDIA
(22) Date of filing of Application :28/03/2024
(43) Publication Date : 07/11/2025

(54) Title of the invention : AUTOMATED RESIN COLLECTION DEVICE FOR BALSAM FIR TREES

(51) International classification	:A61M0001000000, E01H0001080000, B25J0005000000, A01G0023100000, B08B0005040000	(71)**Name of Applicant :** **1)Chandigarh University** Address of Applicant :National Highway 95, Chandigarh-Ludhiana Highway, Mohali, Punjab 140413, India. Mohali Punjab India **2)Chandigarh University Technology Business Incubator**
(31) Priority Document No	:NA	(72)**Name of Inventor :**
(32) Priority Date	:NA	**1)Mehrun Nisha Khanam**
(33) Name of priority country	:NA	
(86) International Application No	:NA	
Filing Date	:NA	
(87) International Publication No	: NA	
(61) Patent of Addition to Application Number	:NA	
Filing Date	:NA	
(62) Divisional to Application Number	:NA	
Filing Date	:NA	

(57) Abstract :
An automated resin collection device for balsam fir trees, comprising, a platform 1 positioned on a ground surface grown with balsam fir trees, a touch enabled screes is to give input commands for extracting resin from the trees, an artificial intelligence-based imaging unit 5 for detecting exact location of the trees, multiple motorized omnidirectional wheels 6 for maneuvering and positioning the platform 1 in proximity to each of the trees in a successive manner a hollow pneumatic pin 7 via a motorized two-axis lead screw arrangement 8 for piercing the bulged portion to exact resin, motorized iris pore 9 to open, a suction unit for generating a vacuum pressure for withdrawing the resin and collecting the resin in a chamber paired with the suction unit, and a weight sensor for detecting weight of the resin.

No. of Pages : 16 No. of Claims : 6

(12) PATENT APPLICATION PUBLICATION
(21) Application No.202411025429 A
(19) INDIA
(22) Date of filing of Application :28/03/2024
(43) Publication Date : 07/11/2025

(54) Title of the invention : HIGH VOLTAGE INSULATOR DISC BREAKING DEVICE

(51) International classification	:H01B17/00, H02G7/00, G05B19/02, H02G1/00
(31) Priority Document No	:NA
(32) Priority Date	:NA
(33) Name of priority country	:NA
(86) International Application No	:NA
Filing Date	:NA
(87) International Publication No	: NA
(61) Patent of Addition to Application Number	:NA
Filing Date	:NA
(62) Divisional to Application Number	:NA
Filing Date	:NA

(71)**Name of Applicant :**
1)Chandigarh University
Address of Applicant :National Highway 95, Chandigarh-Ludhiana Highway, Mohali, Punjab 140413, India. Mohali Punjab India
2)Chandigarh University Technology Business Incubator
(72)**Name of Inventor :**
1)Divya

(57) Abstract :
A high voltage insulator disc breaking device, comprising, a ring-shaped body 5 constructed with a pair of curved-shaped extendable members 1 having first ends configured with each other and second ends initially stored away from each other, developed to be accommodated around an electric pole, a laser acuity sensor for detecting diameter of the pole, a motorized hinge 11 configured between the first ends for tilting the members 1 to position second ends in contact with each other, an imaging unit 6 mounted on one of the member for detecting exact location of the discs installed with the pole, a pair of L-shaped telescopically operated links 4 to extend for positioning a pair of motorized omnidirectional wheels 7 in contact with pole, and a motorized pivot joint 10 for providing a to-and-fro motion to the bar 9 to strike the hammer 2 on the disc for breaking the disc.

No. of Pages : 18 No. of Claims : 4

(12) PATENT APPLICATION PUBLICATION
(21) Application No.202411025430 A
(19) INDIA
(22) Date of filing of Application :28/03/2024
(43) Publication Date : 07/11/2025

(54) Title of the invention : ADJUSTABLE BOLT FASTENING/UNFASTENING DEVICE

(51) International classification	:A61B0001050000, B29D0011000000, F16C0011060000, H02K0011330000, B65G0023080000
(31) Priority Document No	:NA
(32) Priority Date	:NA
(33) Name of priority country	:NA
(86) International Application No	:NA
Filing Date	:NA
(87) International Publication No	: NA
(61) Patent of Addition to Application Number	:NA
Filing Date	:NA
(62) Divisional to Application Number	:NA
Filing Date	:NA

(71)**Name of Applicant :**
1)Chandigarh University
Address of Applicant :National Highway 95, Chandigarh-Ludhiana Highway, Mohali, Punjab 140413, India. Mohali Punjab India
2)Chandigarh University Technology Business Incubator
(72)**Name of Inventor :**
1)Geetika Sukheja

(57) Abstract :
An adjustable bolt fastening/unfastening device comprises an elongated body 1 having a proximal 2 and distal 3 end, a U-shaped frame 5 arranged at the distal 3 end that is positioned in proximity to a nut, an artificial intelligence-based imaging unit 6 monitors condition of a bolt engaged on the nut, an ultrasonic monitors distance of the frame from the nut and bolt, multiple extendable links 7 each integrated with a suction unit 8 affix the frame, a motorized roller 9 installed on the frame and coiled with a looped strap engaged on the bolt by the user, a tension sensor integrated on the roller for monitoring tension experienced on the strap, and a motorized ball and socket joint integrated in between the distal 3 end and frame providing angular movement to the frame with respect to the bolt.

No. of Pages : 16 No. of Claims : 4

(12) PATENT APPLICATION PUBLICATION
(21) Application No.202411025431 A
(19) INDIA
(22) Date of filing of Application :28/03/2024
(43) Publication Date : 07/11/2025

(54) Title of the invention : STOVE FLAME MANAGEMENT DEVICE

(51) International classification	:G06F0003010000, A61B0006100000, G06F0003048830, A61B0017000000, H01M0050213000	(71)**Name of Applicant :** **1)Chandigarh University** Address of Applicant :National Highway 95, Chandigarh-Ludhiana Highway, Mohali, Punjab 140413, India. Mohali Punjab India **2)Chandigarh University Technology Business Incubator**
(31) Priority Document No	:NA	(72)**Name of Inventor :**
(32) Priority Date	:NA	**1)Jyoti Taunk**
(33) Name of priority country	:NA	
(86) International Application No	:NA	
Filing Date	:NA	
(87) International Publication No	: NA	
(61) Patent of Addition to Application Number	:NA	
Filing Date	:NA	
(62) Divisional to Application Number	:NA	
Filing Date	:NA	

(57) Abstract :
A stove flame management device, comprising, a ring-shaped body 1 constructed with a pair of curved-shaped extendable members 2 having first ends configured with each other and second ends initially positioned away from each other, developed to be accommodated around a burner of a stove, an artificial intelligence-based imaging unit 3 mounted on one of the members 2 and paired with a processor for detecting diameter of the burner, a motorized hinge 4 configured between the first ends, wherein based on the detected diameter, and a drawer arrangement in synchronization with actuation of the hinge 4 configured between the first ends for tilting the members 2 to position the second ends in contact with each other, thus accommodating the body 1 around the burner.

No. of Pages : 18 No. of Claims : 5

(12) PATENT APPLICATION PUBLICATION
(21) Application No.202411025039 A
(19) INDIA
(22) Date of filing of Application :28/03/2024
(43) Publication Date : 07/11/2025

(54) Title of the invention : NAPHTHYRIDINE COMPOUNDS AND THEIR USE AS PEST CONTROL AGENTS

(51) International classification	:C07D401/06, A01N43/48, C07D417/04, C07D487/04, A01N47/34, A01N47/42, A01P7/04	(71)**Name of Applicant :** **1)PI INDUSTRIES LTD.** Address of Applicant :Udaisagar Road, Udaipur- 313001, Rajasthan, INDIA Udaipur Rajasthan India (72)**Name of Inventor :** **1)NARASIMHA MURTHY CHEEMALA** **2)SUDIPTA BHATTACHARYYA** **3)RAJESH TELI** **4)AJAY SINGH YADAV** **5)VAIBHAV JAIN** **6)ALEXANDER G.M. KLAUSENER**
(31) Priority Document No	:NA	
(32) Priority Date	:NA	
(33) Name of priority country	:NA	
(86) International Application No	:NA	
Filing Date	:NA	
(87) International Publication No	: NA	
(61) Patent of Addition to Application Number	:NA	
Filing Date	:NA	
(62) Divisional to Application Number	:NA	
Filing Date	:NA	

(57) Abstract :
The present invention discloses a N-substituted naphthyridine compound of formula (I), or salts, stereo-isomers, metal complexes, polymorphs or N-oxides thereof. Formula (I) wherein, Ra, Rb, R1, R2, R3, W and Hy are as defined in the detailed description. The present invention further discloses methods for preparation of compounds of formula (I) and the use of the compounds of formula (I) as a pest control agent.

No. of Pages : 132 No. of Claims : 14

(12) PATENT APPLICATION PUBLICATION
(21) Application No.202411025072 A
(19) INDIA
(22) Date of filing of Application :28/03/2024
(43) Publication Date : 07/11/2025

(54) Title of the invention : AN INTEGRATED SWITCHING DEVICE WITH ACTIVE HAPTIC FEEDBACK

(51) International classification	:G06F0003010000, G06F0003041000, A61B0005000000, G06F0001160000, G06F0003035400
(31) Priority Document No	:NA
(32) Priority Date	:NA
(33) Name of priority country	:NA
(86) International Application No	:NA
Filing Date	:NA
(87) International Publication No	: NA
(61) Patent of Addition to Application Number	:NA
Filing Date	:NA
(62) Divisional to Application Number	:NA
Filing Date	:NA

(71)**Name of Applicant :**
1)Uno Mindarika Private Limited
Address of Applicant :B-64/1, Wazirpur Industrial Area, NA, Delhi, New Delhi - 110052, India New Delhi Delhi India
(72)**Name of Inventor :**
1)SONI, Mohan Murari
2)AHIRE, Rahul Manik
3)KUMAR, Varun
4)GHAYAL, Abhishek Kalyan

(57) Abstract :
Disclosed is a switching device (100) that can be activated by two input signals thus avoids false activations. The switching device (100) includes a controller in communication with a touch interface (104) and a holder assembly (200) positioned below the touch interface (104). The touch interface (104) is configured to generate a first signal in response to a touch input. The holder assembly (200) is sensitive to the touch input through vibrations that is eventually detected by an optical sensor (204) and generates a second signal. The controller is configured to receive the first signal and the second signal and activate a vibration assembly upon detecting both, the first signal and the second signal to generate vibrations that are further transmitted to the touch interface (104) as a haptic feedback.

No. of Pages : 27 No. of Claims : 10

(12) PATENT APPLICATION PUBLICATION
(21) Application No.202411025097 A
(19) INDIA
(22) Date of filing of Application :28/03/2024
(43) Publication Date : 07/11/2025

(54) Title of the invention : A PROCESS FOR MASS PRODUCTION OF SHIKIMIC ACID

(51) International classification	:C12N0015820000, C12M0001000000, C12M0001120000, C12M0003000000, A01H0004000000	(71)**Name of Applicant :** **1)Indian Institute of Technology Delhi** Address of Applicant :Indian Institute of Technology Delhi, Hauz Khas, New Delhi-110016, India New Delhi Delhi India (72)**Name of Inventor :** **1)SRIVASTAVA, Ashok Kumar** **2)ANJUM, Rabab**
(31) Priority Document No	:NA	
(32) Priority Date	:NA	
(33) Name of priority country	:NA	
(86) International Application No	:NA	
Filing Date	:NA	
(87) International Publication No	: NA	
(61) Patent of Addition to Application Number	:NA	
Filing Date	:NA	
(62) Divisional to Application Number	:NA	
Filing Date	:NA	

(57) Abstract :
The present invention discloses the process for mass production of shikimic acid from plant cell cultivation involves cultivating the specific cells in a controlled environment using bioreactor, optimizing the nutrient mixture, growth conditions, and introducing certain elicitors and precursors to develop an appropriate medium for suspension culture. The process was then scaled up from a 3-liter to a 100-liter bioreactor to demonstrate its feasibility for commercial large-scale production, achieving a biomass concentration of up to 13.93±1.03g/L and shikimic acid accumulation of up to 658.89±4.8mg/L.

No. of Pages : 19 No. of Claims : 10

(12) PATENT APPLICATION PUBLICATION
(21) Application No.202411025131 A
(19) INDIA
(22) Date of filing of Application :28/03/2024
(43) Publication Date : 07/11/2025

(54) Title of the invention : "A BRACKET FOR MOUNTING OF AN AIRBAG OF A VEHICLE"

(51) International classification	:G01N0021640000, B60R0021213000, B25J0009040000, B60R0016023000, A61B0017080000	(71)**Name of Applicant :** **1)Maruti Suzuki India Ltd.** Address of Applicant :1 Nelson Mandela Road Vasant Kunj New Delhi Delhi India 110070 New Delhi Delhi India (72)**Name of Inventor :** **1)NALINIKANTA BISWAL** **2)SREEJITH MP** **3)LOKESH KHANDELWAL** **4)MOHAN RAMACHANDRAPPA** **5)GANESH DEVARAJ**
(31) Priority Document No	:NA	
(32) Priority Date	:NA	
(33) Name of priority country	:NA	
(86) International Application No	:NA	
Filing Date	:NA	
(87) International Publication No	: NA	
(61) Patent of Addition to Application Number	:NA	
Filing Date	:NA	
(62) Divisional to Application Number	:NA	
Filing Date	:NA	

(57) Abstract :
A bracket (100) for mounting of an airbag (1) of a vehicle is disclosed. The bracket (100) includes a first portion (3) connectable to a body frame (200) of the vehicle. The first portion (3) is defined with a lug (4) extending therefrom. A second portion (5) defined adjacent the first portion (3), and is defined with a pair of cutouts (6, 7). Further, a plurality of arms (8, 9, 10, 11) extend from the second portion (5). The plurality of arms include a first arm (8) and a second arm (9) extending in a substantially opposite direction to each other. Furthermore, a third arm (10) and a fourth arm (11) extend in a substantially orthogonal to the first arm (8) and the second arm (9). In addition, the third arm (10) and the fourth arm (11) are also configured to extend in a substantially opposite direction to each other. Figure 4 is representative figure.

No. of Pages : 29 No. of Claims : 10

(12) PATENT APPLICATION PUBLICATION

(21) Application No.202411025153 A

(19) INDIA

(22) Date of filing of Application :28/03/2024

(43) Publication Date : 07/11/2025

(54) Title of the invention : A FILTER ASSEMBLY FOR FILTERING A LIQUID

(51) International classification	:C02F0001440000, C02F0009000000, A61M0005165000, B01D0029210000, A47J0031600000	(71)**Name of Applicant :** **1)CHAKR INNOVATION PRIVATE LIMITED** Address of Applicant :GROUND FLOOR OF THE COMMERCIAL BUILDING MOHAN DEV, JANPATH, CENTRAL DELHI, NEW DELHI-110001, INDIA DELHI Delhi India
(31) Priority Document No	:NA	(72)**Name of Inventor :**
(32) Priority Date	:NA	**1)NAYAN ANAND**
(33) Name of priority country	:NA	**2)KARAN RAIKAR**
(86) International Application No	:NA	**3)GAURAV SHUKLA**
Filing Date	:NA	
(87) International Publication No	: NA	
(61) Patent of Addition to Application Number	:NA	
Filing Date	:NA	
(62) Divisional to Application Number	:NA	
Filing Date	:NA	

(57) Abstract :

Present disclosure relates to a filter assembly (100) and a filter system (200) for filtering a liquid. The filter assembly comprises a housing (102) defined with a first end (102a) and a second end (102b) in a longitudinal direction (L-L). There is a diffuser (104) provisioned at the first end of the housing to uniformly distribute the liquid inlet into the housing. The filter assembly includes a holder (106) extending between the first end and the second end and provisioned within the housing and a filter membrane (108) provisioned within the holder. The holder is configured to support the filter membrane. The filter assembly further includes a cover member (110) provisioned at the second end of the housing. The filter membrane is configured to filter-out impurities from the liquid, and the housing and the cover member holds the impurities. FIG. 1 is the representative figure.

No. of Pages : 21 No. of Claims : 10

(12) PATENT APPLICATION PUBLICATION
(21) Application No.202411025323 A
(19) INDIA
(22) Date of filing of Application :28/03/2024
(43) Publication Date : 07/11/2025

(54) Title of the invention : AN INTEGRATED BEDDING SYSTEM WITH SENSOR SAFETY CONTROLS

(51) International classification	:G08B0021020000, A47D0009000000, B63C0009000000, A47D0015000000, A47D0013060000	(71)**Name of Applicant :** **1)AMITY UNIVERSITY** Address of Applicant :AMITY UNIVERSITY CAMPUS, SECTOR-125, NOIDA, UTTAR PRADESH, INDIA, 201313 Uttar Pradesh India (72)**Name of Inventor :** **1)Ajay Rana** **2)Garima Bhardwaj** **3)S Vikram Singh** **4)Prateek Chaturvedi**
(31) Priority Document No	:NA	
(32) Priority Date	:NA	
(33) Name of priority country	:NA	
(86) International Application No	:NA	
Filing Date	:NA	
(87) International Publication No	: NA	
(61) Patent of Addition to Application Number	:NA	
Filing Date	:NA	
(62) Divisional to Application Number	:NA	
Filing Date	:NA	

(57) Abstract :
The present invention discloses a system and working method for IoT integrated bedding system. The objective of the present invention is to provide an automated notification that activate bed safety feature when someone leave baby on bed and no one around him or her to save if fallen from bed with sensor activate feature and baby can be save from dangerous fallen and the person accommodate him/her get the alarm notification. Accompanied Drawings [Figure 1-4]

No. of Pages : 21 No. of Claims : 10

(12) PATENT APPLICATION PUBLICATION

(21) Application No.202411025324 A

(19) INDIA

(22) Date of filing of Application :28/03/2024

(43) Publication Date : 07/11/2025

(54) Title of the invention : FOOD MATRIX COMPOSITION FOR HYPERTENSION & DIABETES MANAGEMENT AND METHOD FOR PREPARATION THEREOF

(51) International classification	:A21D13/11, A21D2/36, A21D13/80, A23L7/10	(71)**Name of Applicant :** **1)AMITY UNIVERSITY** Address of Applicant :AMITY UNIVERSITY CAMPUS, SECTOR-125, NOIDA, UTTAR PRADESH, INDIA, 201313 Uttar Pradesh India
(31) Priority Document No	:NA	(72)**Name of Inventor :**
(32) Priority Date	:NA	**1)Kankana Das**
(33) Name of priority country	:NA	**2)Krishnendu Manna**
(86) International Application No	:NA	**3)Debjyoti Paul**
Filing Date	:NA	**4)Manasi Ghosh**
(87) International Publication No	: NA	**5)Jatindra Nath Bhakta**
(61) Patent of Addition to Application Number	:NA	**6)Arindom Halder**
Filing Date	:NA	
(62) Divisional to Application Number	:NA	
Filing Date	:NA	

(57) Abstract :

The present invention discloses a high-fiber, sugar-free functional food matrix composition for metabolic syndrome mitigation and preparation method. The present invention provides a novel solution to the challenge of creating a high-fiber, sugar-free cookie that is both health-promoting and palatable. The functional food matrix unit described herein effectively addresses the complications of metabolic syndrome, offering a convenient and acceptable option for consumers seeking healthier snack alternatives. Accompanied Drawing [Figure 1]

No. of Pages : 15 No. of Claims : 10

(12) PATENT APPLICATION PUBLICATION
(21) Application No.202411025334 A
(19) INDIA
(22) Date of filing of Application :28/03/2024
(43) Publication Date : 07/11/2025

(54) Title of the invention : A CONNECTOR ASSEMBLY FOR CONNECTING ELECTRODES IN A BATTERY

(51) International classification	:H01M50/50, H01M50/502, H01M50/531
(31) Priority Document No	:NA
(32) Priority Date	:NA
(33) Name of priority country	:NA
(86) International Application No	:NA
Filing Date	:NA
(87) International Publication No	: NA
(61) Patent of Addition to Application Number	:NA
Filing Date	:NA
(62) Divisional to Application Number	:NA
Filing Date	:NA

(71)**Name of Applicant :**
1)CHAKR INNOVATION PRIVATE LIMITED
Address of Applicant :Ground Floor of the Commercial Building Mohan Dev, Janpath, Central Delhi, New Delhi-110001, India New Delhi Delhi India
(72)**Name of Inventor :**
1)NAYAN ANAND
2)KARAN RAIKAR

(57) Abstract :
The present disclosure relates to a connector assembly for connecting electrodes in a battery. The connector assembly comprises a busbar adapted to couple a first electrode of a cell to a second electrode of a subsequent cell within the battery. The busbar is defined with a rigid member coupled to the first electrode. A flexible portion is having one end extending from the rigid member and a crimped terminal is mounted to other end of the flexible portion. The connecting assembly includes a swappable terminal coupled to the crimped terminal configured to be in contact with a provision at the second electrode. A plug is coupled to the swappable terminal and configured to extend through the provision of the second electrode. Further, a retainer is adapted to releasably engage and lock the plug about the provision to prevent dislodgment of the swappable terminal from the second electrode. Figure. 1

No. of Pages : 22 No. of Claims : 14

(12) PATENT APPLICATION PUBLICATION
(21) Application No.202411025345 A
(19) INDIA
(22) Date of filing of Application :28/03/2024
(43) Publication Date : 07/11/2025

(54) Title of the invention : SYSTEM AND METHOD FOR A COMBINED ULTRASONIC ELECTROMYOGRAPHY SENSOR

(51) International classification	:A61B0005000000, A61B0005389000, A61B0005110000, A61B0005296000, A61B0008080000
(31) Priority Document No	:NA
(32) Priority Date	:NA
(33) Name of priority country	:NA
(86) International Application No	:NA
Filing Date	:NA
(87) International Publication No	: NA
(61) Patent of Addition to Application Number	:NA
Filing Date	:NA
(62) Divisional to Application Number	:NA
Filing Date	:NA

(71)**Name of Applicant :**
1)Indian Institute of Technology Delhi
Address of Applicant :Indian Institute of Technology Delhi, Hauz Khas, New Delhi-110016, India New Delhi Delhi India
(72)**Name of Inventor :**
1)MUKHERJEE, Biswarup
2)SHARMA, Kavita
3)KAMATHAM, Anne Tryphosa

(57) Abstract :
A sensing system (100) for detecting neuromuscular activity is disclosed. The sensing system includes a sensing device. The sensing device (102) includes an ultrasound transducer (104) to measure sonomyography (SMG) signals for muscle deformation. A matching layer (106) includes a copper layer acting as an electromyography (EMG) electrode. An ultrasound pulser-receiver unit (108) is configured to generate pulse signals based on the SMG signals measured by the ultrasound transducer. An EMG preamplifier (110) is connected to the top copper layer of the matching layer, the EMG preamplifier is configured to amplify the electrical signals captured by the top copper layer. A signal processing unit (112) is connected with the ultrasound pulser-receiver unit to process and generate one or more first outputs corresponding to the measured SMG signals. An EMG signal processing unit (114) is configured to generate second outputs corresponding to the captured electrical signals.

No. of Pages : 28 No. of Claims : 10

(12) PATENT APPLICATION PUBLICATION
(21) Application No.202411025394 A
(19) INDIA
(22) Date of filing of Application :28/03/2024
(43) Publication Date : 07/11/2025

(54) Title of the invention : ADAPTABLE GOLF-CLUB REPAIRING ASSISTIVE DEVICE

(51) International classification	:A63B0053040000, A63B0069360000, A63B0060620000, A63B0060000000, A63B0053140000
(31) Priority Document No	:NA
(32) Priority Date	:NA
(33) Name of priority country	:NA
(86) International Application No	:NA
Filing Date	:NA
(87) International Publication No	: NA
(61) Patent of Addition to Application Number	:NA
Filing Date	:NA
(62) Divisional to Application Number	:NA
Filing Date	:NA

(71)**Name of Applicant :**
1)Chandigarh University
Address of Applicant :National Highway 95, Chandigarh-Ludhiana Highway, Mohali, Punjab 140413, India. Mohali Punjab India
2)Chandigarh University Technology Business Incubator
(72)**Name of Inventor :**
1)Jayaram R

(57) Abstract :
An adaptable golf-club repairing assistive device comprises of a platform 1 developed to be positioned on a fixed surface, multiple suction to adhere to the surface for securing the platform 1 on surface, a slot 9 for enabling a user to accommodate a damaged golf club on the slot 9, an imaging unit 3 to determine position of golf club, a robotic arm 4 to acquire a grip of shaft of the golf club for applying a pulling force on the shaft in view of detecting a loose club head on golf club, a robotic link 5 to extend or retract for getting positioned in proximity to lower end of the shaft as well as the club head, and a pair of circular rings 8 to provide a controlled rotating movement to the rings 8 for a thread on the shaft as well as in the club head.

No. of Pages : 15 No. of Claims : 4

(12) PATENT APPLICATION PUBLICATION
(21) Application No.202411024916 A
(19) INDIA
(22) Date of filing of Application :27/03/2024
(43) Publication Date : 07/11/2025

(54) Title of the invention : AUTOMATED WOODEN DOWEL MANUFACTURING DEVICE

(51) International classification	:B25J0015000000, A61B0034200000, A61B0005000000, F16K0005200000, G06F0003041000
(31) Priority Document No	:NA
(32) Priority Date	:NA
(33) Name of priority country	:NA
(86) International Application No	:NA
Filing Date	:NA
(87) International Publication No	: NA
(61) Patent of Addition to Application Number	:NA
Filing Date	:NA
(62) Divisional to Application Number	:NA
Filing Date	:NA

(71)**Name of Applicant :**
1)Chandigarh University
Address of Applicant :National Highway 95, Chandigarh-Ludhiana Highway, Mohali, Punjab 140413, India. Mohali Punjab India
2)Chandigarh University Technology Business Incubator
(72)**Name of Inventor :**
1)Sanjeet Singh

(57) Abstract :
An automated wooden dowel manufacturing device, comprising, a body 1 developed to be positioned on a fixed surface, a touch interactive display screen 2 arranged with the body 1 that is accessed by a user for providing input regarding dimensions of a wooden dowel to be manufactured, a storage chamber 3 arranged inside the body 1 accessed by a robotic arm arranged inside the body 1 for gripping a wooden piece stored in the chamber 3, a platform is arranged inside the body 1 that is accessed by the arm for accommodating the gripped wooden piece on the platform, an artificial intelligence-based imaging unit 4 installed inside the body 1 for capturing multiple images of inside the body 1 and a motorized clamping unit integrated on the platform for gripping the accommodated wooden piece.

No. of Pages : 16 No. of Claims : 3

(12) PATENT APPLICATION PUBLICATION
(21) Application No.202411024917 A
(19) INDIA
(22) Date of filing of Application :27/03/2024
(43) Publication Date : 07/11/2025

(54) Title of the invention : ADAPTABLE SUN DRYING DEVICE FOR EDIBLES

(51) International classification	:A61B0017000000, B08B0003120000, A23G0003540000, A23G0003340000, A01M0029180000	(71)**Name of Applicant :** **1)Chandigarh University** Address of Applicant :National Highway 95, Chandigarh-Ludhiana Highway, Mohali, Punjab 140413, India. Mohali Punjab India **2)Chandigarh University Technology Business Incubator**
(31) Priority Document No	:NA	(72)**Name of Inventor :**
(32) Priority Date	:NA	**1)Ranjan Walia**
(33) Name of priority country	:NA	
(86) International Application No	:NA	
Filing Date	:NA	
(87) International Publication No	: NA	
(61) Patent of Addition to Application Number	:NA	
Filing Date	:NA	
(62) Divisional to Application Number	:NA	
Filing Date	:NA	

(57) Abstract :
An adaptable sun drying device for edibles comprises a frame 1 to be suspended from a fixed support, a hook 2 for engaging frame 1 on support, a cylindrical body 3 integrated with plurality of chambers 4 for storing different edibles, plurality of telescopically operated links 5 for maintaining an optimum distance, a LDR for monitoring intensity of light, multiple motorized hinges 6 to tilt portions of body 3, a timer 7 for monitoring time duration of drying of edibles, a motorized gripper 8 integrated with a flap 9 for tossing/turning sides of accommodated edible, a moisture sensor for monitoring moisture content of stored edibles, a motorized iris lid 10 to get opened for allowing dried edibles to get transferred in a container 11, a meshed fabric 12 to cover body 3 and an ultrasonic emitter to produce ultrasonic vibrations for deterring any insect/animal approaching towards frame 1.

No. of Pages : 14 No. of Claims : 4

(12) PATENT APPLICATION PUBLICATION
(21) Application No.202411024918 A
(19) INDIA
(22) Date of filing of Application :27/03/2024
(43) Publication Date : 07/11/2025

(54) Title of the invention : AUTOMATED BALL AND BEARING ASSEMBLY MANUFACTURING DEVICE

(51) International classification	:A61M0005310000, F16C0019540000, A47C0027080000, F16C0019080000, G06F0003044000
(31) Priority Document No	:NA
(32) Priority Date	:NA
(33) Name of priority country	:NA
(86) International Application No	:NA
Filing Date	:NA
(87) International Publication No	: NA
(61) Patent of Addition to Application Number	:NA
Filing Date	:NA
(62) Divisional to Application Number	:NA
Filing Date	:NA

(71)**Name of Applicant :**
1)Chandigarh University
Address of Applicant :National Highway 95, Chandigarh-Ludhiana Highway, Mohali, Punjab 140413, India. Mohali Punjab India
2)Chandigarh University Technology Business Incubator
(72)**Name of Inventor :**
1)Vinay Kumar

(57) Abstract :
An automated ball and bearing assembly manufacturing device comprises a housing 1 installed with a touch enabled screen 3 for user input, a pair of pneumatic pins 2 held within plurality of chambers arranged on the housing 1 for releasing the rings on a conveyer 4 installed underneath the chambers, an artificial intelligence-based imaging unit 6 mounted within the housing 1 for detecting presence of the rings on the platform 5, a telescopically operated gripper 7accommodates one of the rings within the other ring, plurality of containers stores steel balls each assembled with a motorized iris lid for dispensing pre-set number of the balls, a circular disc 8 suspended from a ceiling portion of the housing 1 via a telescopically operated rod 9, for positioning the disc within inner ring, and an expandable pulley arrangement 10 integrated within the disc for increasing diameter of the disc.

No. of Pages : 19 No. of Claims : 8

(12) PATENT APPLICATION PUBLICATION
(21) Application No.202411024919 A
(19) INDIA
(22) Date of filing of Application :27/03/2024
(43) Publication Date : 07/11/2025

(54) Title of the invention : SHEET CUTTING ASSISTIVE DEVICE

(51) International classification	:G06F0003041000, B26D0005000000, G06F0003042000, G01B0011250000, A61B0017300000
(31) Priority Document No	:NA
(32) Priority Date	:NA
(33) Name of priority country	:NA
(86) International Application No	:NA
Filing Date	:NA
(87) International Publication No	: NA
(61) Patent of Addition to Application Number	:NA
Filing Date	:NA
(62) Divisional to Application Number	:NA
Filing Date	:NA

(71)**Name of Applicant :**
1)Chandigarh University
Address of Applicant :National Highway 95, Chandigarh-Ludhiana Highway, Mohali, Punjab 140413, India. Mohali Punjab India
2)Chandigarh University Technology Business Incubator
(72)**Name of Inventor :**
1)Jasgurpreet Singh

(57) Abstract :
A sheet cutting assistive device, comprising an elongated body 1 having proximal and distal end wherein a handle is crafted with proximal end to acquire a grip over body 1 to position distal end over a sheet that is to be cut, a touch interactive display panel 2 mapped over body 1 to allow user to provide input regarding a shape and dimension in which sheet is to be cut, an artificial intelligence based imaging unit 3 mapped over body 1 to determine dimensions of sheet, a laser projection unit 4 installed over body 1 to project user-specified shape over sheet in accordance with user-specified dimensions, an confocal sensor is installed over body 1 to monitor thickness of sheet based on which microcontroller actuates particular link configured with evaluated blade to extend and apply pressure over sheet for cutting sheet in an efficient manner.

No. of Pages : 15 No. of Claims : 4

(12) PATENT APPLICATION PUBLICATION
(21) Application No.202411025432 A
(19) INDIA
(22) Date of filing of Application :28/03/2024
(43) Publication Date : 07/11/2025

(54) Title of the invention : ADAPTABLE SNACK PREPARATION DEVICE

(51) International classification	:H04N0005232000, G06F0003041000, B65G0023080000, H04N0001210000, G02B0021360000
(31) Priority Document No	:NA
(32) Priority Date	:NA
(33) Name of priority country	:NA
(86) International Application No	:NA
Filing Date	:NA
(87) International Publication No	: NA
(61) Patent of Addition to Application Number	:NA
Filing Date	:NA
(62) Divisional to Application Number	:NA
Filing Date	:NA

(71)**Name of Applicant :**
1)Chandigarh University
Address of Applicant :National Highway 95, Chandigarh-Ludhiana Highway, Mohali, Punjab 140413, India. Mohali Punjab India
2)Chandigarh University Technology Business Incubator
(72)**Name of Inventor :**
1)Kaushik Pal

(57) Abstract :
An adaptable snack preparation device, comprising a platform 1 developed to be positioned on a fixed surface, suction units 2 for affixing the platform 1 on the surface, touch interactive display panel 3 accessed by a user for selecting dimensions of a snack to be prepared, plate 4 arranged on the platform 1 and mounted with an inverted U-shaped frame 5 by means of a pair of motorized sliding units 6, multi-sectioned chamber 7 integrated with an electronically controlled sprinkler 8 to dispense a lubricating solution in view of imparting smoothness to the plate 4, artificial intelligence-based imaging unit 9 for capturing multiple images of the platform 1, to determine spreading of the solution on the plate 4, motorized roller 10 internally connected with a conduit 11 accessed by the user for positioning end of the conduit 11 in an auxiliary vessel 12 stored with batter.

No. of Pages : 16 No. of Claims : 3

(12) PATENT APPLICATION PUBLICATION
(21) Application No.202411025433 A
(19) INDIA
(22) Date of filing of Application :28/03/2024
(43) Publication Date : 07/11/2025

(54) Title of the invention : AUTOMATED WINDINGS REMOVING DEVICE

(51) International classification	:B61B0001020000, G06F0001160000, B25J0011000000, E01F0001000000, G06F0003041000	(71)**Name of Applicant :** **1)Chandigarh University** Address of Applicant :National Highway 95, Chandigarh-Ludhiana Highway, Mohali, Punjab 140413, India. Mohali Punjab India **2)Chandigarh University Technology Business Incubator**
(31) Priority Document No	:NA	(72)**Name of Inventor :**
(32) Priority Date	:NA	**1)Arabinda Meher**
(33) Name of priority country	:NA	
(86) International Application No	:NA	
Filing Date	:NA	
(87) International Publication No	: NA	
(61) Patent of Addition to Application Number	:NA	
Filing Date	:NA	
(62) Divisional to Application Number	:NA	
Filing Date	:NA	

(57) Abstract :
An automated windings removing device, comprising a platform 1 positioned over a ground surface, a touch interactive display panel 2 installed over the platform 1 that is accessed by the user to provide input details, an artificial intelligence based imaging unit 3 installed over the platform 1 to determine dimensions of the stator, a motorized cutter 4 configured with the platform 1 to cut the winding from one side of the stator, plurality of cylindrical members 5 arranged on the platform 1, wherein a pair of motorized grippers 6 installed over the platform 1 to grip and position the stator within one of the member 5, a ring 7 installed over the platform 1 configured with plurality of curved links 8 for pulling the windings out of the stator.

No. of Pages : 14 No. of Claims : 4

(12) PATENT APPLICATION PUBLICATION
(21) Application No.202411025434 A
(19) INDIA
(22) Date of filing of Application :28/03/2024
(43) Publication Date : 07/11/2025

(54) Title of the invention : AUTOMATED INCORRECT FUEL FILLING PREVENTION DEVICE

(51) International classification	:B60K0015040000, B60K0015035000, C10L0001230000, G01N0033280000, B67D0007340000
(31) Priority Document No	:NA
(32) Priority Date	:NA
(33) Name of priority country	:NA
(86) International Application No	:NA
Filing Date	:NA
(87) International Publication No	: NA
(61) Patent of Addition to Application Number	:NA
Filing Date	:NA
(62) Divisional to Application Number	:NA
Filing Date	:NA

(71)**Name of Applicant :**
1)Chandigarh University
Address of Applicant :National Highway 95, Chandigarh-Ludhiana Highway, Mohali, Punjab 140413, India. Mohali Punjab India
2)Chandigarh University Technology Business Incubator
(72)**Name of Inventor :**
1)Amit Verma

(57) Abstract :
An automated incorrect fuel filling prevention device comprises a spiral shaped cylindrical member 1 interconnected between fuel tank of a four wheeler and filler tube of the fuel tank, a fuel cap installed with free end of the filler tube that is accessed by a user to fill fuel in the fuel tank, a sensing module installed on the member 1 to determine, octane number, cetane number and composition of fuel poured in the member 1, plurality of iris lids 2 installed with the member 1 withdraw the poured fuel, and a chamber 3 is linked with the lids 2 by means of a conduit 4 for collecting the withdrawn fuel.

No. of Pages : 14 No. of Claims : 5

(12) PATENT APPLICATION PUBLICATION
(21) Application No.202411025435 A
(19) INDIA
(22) Date of filing of Application :28/03/2024
(43) Publication Date : 07/11/2025

(54) Title of the invention : ROAD FENCE MAINTENANCE DEVICE

(51) International classification	:G06Q0030060000, H04N0007180000, B62B0005000000, H01L0029510000, B41J0002165000	(71)**Name of Applicant :** **1)Chandigarh University** Address of Applicant :National Highway 95, Chandigarh-Ludhiana Highway, Mohali, Punjab 140413, India. Mohali Punjab India **2)Chandigarh University Technology Business Incubator**
(31) Priority Document No	:NA	(72)**Name of Inventor :**
(32) Priority Date	:NA	**1)Harbinder Singh**
(33) Name of priority country	:NA	
(86) International Application No	:NA	
Filing Date	:NA	
(87) International Publication No	: NA	
(61) Patent of Addition to Application Number	:NA	
Filing Date	:NA	
(62) Divisional to Application Number	:NA	
Filing Date	:NA	

(57) Abstract :
A road fence maintenance device, comprising a housing 1 positioned in proximity to a road fence and installed with a first circular disc 10 via a telescopically operated link 2, a second circular disc 3 installed with the housing 1 via an L-shaped telescopically operated rod 4 , an artificial intelligence-based imaging unit 6 for detecting length of the road fence, plurality of motorized omnidirectional wheels 7 for maneuvering the housing 1 along the road fence, an electronic nozzle 8 for dispensing the cleaning solution on the road fence, an electronic valve 9 for removing the corrosion.

No. of Pages : 19 No. of Claims : 7

(12) PATENT APPLICATION PUBLICATION
(21) Application No.202411025436 A
(19) INDIA
(22) Date of filing of Application :28/03/2024
(43) Publication Date : 07/11/2025

(54) Title of the invention : A SUSPENSION SYSTEM FOR A SEAT ASSEMBLY

(51) International classification	:B60N2/50, B60N2/54
(31) Priority Document No	:NA
(32) Priority Date	:NA
(33) Name of priority country	:NA
(86) International Application No	:NA
Filing Date	:NA
(87) International Publication No	: NA
(61) Patent of Addition to Application Number	:NA
Filing Date	:NA
(62) Divisional to Application Number	:NA
Filing Date	:NA

(71)**Name of Applicant :**
1)Uno Minda Limited
Address of Applicant :Village Nawada, Fatehpur, P.O. Sikanderpur Badda, Distt. Gurgaon - 122004, Haryana, India Distt. Gurgaon Haryana India
(72)**Name of Inventor :**
1)MAJALE, Umesh
2)DEVDASS, Saravanan
3)PACHAIYAPPAN, Rengasamy
4)A, Abdulrafi

(57) Abstract :
The present disclosure relates to a suspension system (100) for a seat assembly of a vehicle. The suspension system (100) includes a bottom plate (104), a top plate (102) slidably coupled with the bottom plate (104), and a damper (108) disposed between the top plate (102) and the bottom plate (104). In addition, the suspension system (100) includes a shaft (142) coupled with the bottom plate (104), a pair of springs (150) disposed on two ends of the shaft (142), and a mandrel (214) securely coupled with the top plate (102) and slidably coupled on the shaft (142) and disposed between the springs (150). Upon a receipt of lateral forces on the seat assembly the top plate (102) slides on the bottom plate (104) and the damper (108) and the pair of springs (150) absorb the amplitude of vibrations between the top plate (102) and the bottom plate (104).

No. of Pages : 28 No. of Claims : 10

(12) PATENT APPLICATION PUBLICATION
(21) Application No.202411024920 A
(19) INDIA
(22) Date of filing of Application :27/03/2024
(43) Publication Date : 07/11/2025

(54) Title of the invention : GRAIN BAG PACKAGING DEVICE

(51) International classification	:B62B0005000000, G05D0001020000, B65G0023080000, H01L0051000000, H04L0067120000
(31) Priority Document No	:NA
(32) Priority Date	:NA
(33) Name of priority country	:NA
(86) International Application No	:NA
Filing Date	:NA
(87) International Publication No	: NA
(61) Patent of Addition to Application Number	:NA
Filing Date	:NA
(62) Divisional to Application Number	:NA
Filing Date	:NA

(71)**Name of Applicant :**
1)Chandigarh University
Address of Applicant :National Highway 95, Chandigarh-Ludhiana Highway, Mohali, Punjab 140413, India. Mohali Punjab India
2)Chandigarh University Technology Business Incubator
(72)**Name of Inventor :**
1)Nishant Ranjan

(57) Abstract :
A grain bag packaging device comprises of a platform 1 configured with plurality of motorized wheels 2 positioned on a ground surface, a sliding plate 3 assembled on the platform 1 for collecting grains, an artificial intelligence-based image capturing unit 5 integrated mapped on the platform 1 for detecting the grains, a c-shaped unit connected to the platform 1 via a motorized hinge for collecting the grains, a touch interactive display panel 6 mapped on the platform 1 for notifying the user, plurality of collecting bags 7 positioned on the platform 1 for transferring the grains, a motorized slider 8 configured with a pair of L-shaped rods 9 integrated with a c-shape clamping unit 10 mapped on the platform 1 to grip the bags 7 and position over a platform 1, a motorized roller 11 installed on the platform 1 to provide a grain packed bags 7.

No. of Pages : 16 No. of Claims : 4

(12) PATENT APPLICATION PUBLICATION
(21) Application No.202411024921 A
(19) INDIA
(22) Date of filing of Application :27/03/2024
(43) Publication Date : 07/11/2025

(54) Title of the invention : AUTOMATED RIVET PRONG INSTALLATION DEVICE

(51) International classification	:A61B0005000000, H04N0005225000, A61P0029000000, G03B0017140000, B26D0007010000	(71)**Name of Applicant :** **1)Chandigarh University** Address of Applicant :National Highway 95, Chandigarh-Ludhiana Highway, Mohali, Punjab 140413, India. Mohali Punjab India **2)Chandigarh University Technology Business Incubator**
(31) Priority Document No	:NA	(72)**Name of Inventor :**
(32) Priority Date	:NA	**1)Anjali Verma**
(33) Name of priority country	:NA	
(86) International Application No	:NA	
Filing Date	:NA	
(87) International Publication No	: NA	
(61) Patent of Addition to Application Number	:NA	
Filing Date	:NA	
(62) Divisional to Application Number	:NA	
Filing Date	:NA	

(57) Abstract :
An automated rivet prong installation device, comprising a housing 1 equipped with plurality of omnidirectional wheels 2 positioned over a surface layered with a plastic sheet that is to be attached, an imaging unit 3 installed over the housing 1 to evaluate 3-Dimensional mapping of the sheet, a display panel 4 installed over the housing 1 to receive user's input, an inverted L-shaped telescopic rod 5 installed over the housing 1 to position a hammer 6 configured with the rod 5 over the projected markings in a sequential manner, a robotic gripper 8 installed over the housing 1 to withdraw and align a rivet prong from a chamber 7 over the projected marking, a spring 9 installed between the hammer 6 and rod 5 for punching the rivet prong over the sheet for installing the sheet with the user-selected area.

No. of Pages : 17 No. of Claims : 5

(12) PATENT APPLICATION PUBLICATION
(21) Application No.202411024922 A
(19) INDIA
(22) Date of filing of Application :27/03/2024
(43) Publication Date : 07/11/2025

(54) Title of the invention : WOODEN CORK MANUFACTURING DEVICE FOR BOTTLES

(51) International classification	:B27J0005000000, A61F0002440000, A47J0031520000, A01K0005020000, B27C0005000000	(71)**Name of Applicant :** **1)Chandigarh University** Address of Applicant :National Highway 95, Chandigarh-Ludhiana Highway, Mohali, Punjab 140413, India. Mohali Punjab India **2)Chandigarh University Technology Business Incubator**
(31) Priority Document No	:NA	(72)**Name of Inventor :**
(32) Priority Date	:NA	**1)Jayaram R**
(33) Name of priority country	:NA	
(86) International Application No	:NA	
Filing Date	:NA	
(87) International Publication No	: NA	
(61) Patent of Addition to Application Number	:NA	
Filing Date	:NA	
(62) Divisional to Application Number	:NA	
Filing Date	:NA	

(57) Abstract :
A wooden cork manufacturing device for bottles comprises a platform 1 on a ground surface, plurality of telescopically operated rods 13 for supporting platform 1, a touch interactive display panel 2 for providing input regarding a dimension and quantity, a robotic arm 3 to extend for gripping a wooden slab from a chamber 4 and position into a holding slot 5, an artificial intelligence-based imaging unit 6 to detect dimensions of the accommodated wooden slab, a L-shaped telescopically operated bar 7 for positioning a hollow cylindrical member 8 over the slab, multiple hinge joints to modulate shape of the member 8, plurality of sharp blades 9 for carving corks, multiple teeth 10 on distal portion for rotating member 8, a storage 11 box for storing manufactured corks, a weight sensor for determining quantity of corks and a speaker 12 to notify user regarding collection of the corks.

No. of Pages : 16 No. of Claims : 3

(12) PATENT APPLICATION PUBLICATION
(21) Application No.202411024923 A
(19) INDIA
(22) Date of filing of Application :27/03/2024
(43) Publication Date : 07/11/2025

(54) Title of the invention : ADAPTABLE DRILLING/CUTTING ASSISTIVE DEVICE

(51) International classification	:G06F0003041000, G06F0003044000, G06F0003048860, G06F0003048830, C09D0007400000	(71)**Name of Applicant :** **1)Chandigarh University** Address of Applicant :National Highway 95, Chandigarh-Ludhiana Highway, Mohali, Punjab 140413, India. Mohali Punjab India **2)Chandigarh University Technology Business Incubator**
(31) Priority Document No	:NA	(72)**Name of Inventor :**
(32) Priority Date	:NA	**1)Vinay Kumar**
(33) Name of priority country	:NA	
(86) International Application No	:NA	
Filing Date	:NA	
(87) International Publication No	: NA	
(61) Patent of Addition to Application Number	:NA	
Filing Date	:NA	
(62) Divisional to Application Number	:NA	
Filing Date	:NA	

(57) Abstract :
An adaptable drilling/cutting assistive device, comprising a cylindrical L-shaped frame 1 having a first and second portion, a touch interactive display panel 3 is installed on the frame 1 for user input, a handle 4 fabricated on the first frame 1 to position the frame 1 in proximity to an object, an imaging unit 2 installed on the frame 1 to determine distance of surface of the object from the frame 1, a drawer arrangement 8 integrated in the frame 1 for positioning the second portion in proximity to the surface, plurality of blades 6 arranged on circular disc arranged on the second portion for arranging the blades 6 as per the evaluated pattern, a motorized hinge joint integrated between the blade and disc to for tilting the blades 6 on the surface as per the user-specified cavity.

No. of Pages : 16 No. of Claims : 5

(12) PATENT APPLICATION PUBLICATION
(21) Application No.202411025395 A
(19) INDIA
(22) Date of filing of Application :28/03/2024
(43) Publication Date : 07/11/2025

(54) Title of the invention : AUTOMATED PROTECTION RAILING INSTALLATION DEVICE

(51) International classification	:B23K0037040000, B23K0037020000, B25J0019000000, B26D0007010000, B25J0005000000	(71)**Name of Applicant :** **1)Chandigarh University** Address of Applicant :National Highway 95, Chandigarh-Ludhiana Highway, Mohali, Punjab 140413, India. Mohali Punjab India **2)Chandigarh University Technology Business Incubator**
(31) Priority Document No	:NA	(72)**Name of Inventor :**
(32) Priority Date	:NA	**1)Amit Verma**
(33) Name of priority country	:NA	
(86) International Application No	:NA	
Filing Date	:NA	
(87) International Publication No	: NA	
(61) Patent of Addition to Application Number	:NA	
Filing Date	:NA	
(62) Divisional to Application Number	:NA	
Filing Date	:NA	

(57) Abstract :
An automated protection railing installation device, comprises a platform 1 positioned in proximity to multiple vertically installed base plates on a ground surface, an imaging unit 2 captures images in vicinity of the platform 1, a motorized U-shaped clamp 3 grips the beam for positioning one end of the beam on first base plate, a multi-sectioned chamber 4 stores multiple components and tools, a robotic arm 5 grips bolt, a robotic gripper 6 grabs a nut, multiple motorized wheels 7 moves the platform 1, an angle sensor monitors alignment of plates, cutting unit cuts multiple parts of the beam, a heating torch heats the edges of the cut parts.

No. of Pages : 16 No. of Claims : 4

(12) PATENT APPLICATION PUBLICATION
(21) Application No.202411025396 A
(19) INDIA
(22) Date of filing of Application :28/03/2024
(43) Publication Date : 07/11/2025

(54) Title of the invention : ADAPTABLE FOUR-WHEELER SHELTERING DEVICE

(51) International classification	:B23K0026700000, B65F0003020000, G01S0017040000, H04N0005232000, B23K0026530000
(31) Priority Document No	:NA
(32) Priority Date	:NA
(33) Name of priority country	:NA
(86) International Application No	:NA
Filing Date	:NA
(87) International Publication No	: NA
(61) Patent of Addition to Application Number	:NA
Filing Date	:NA
(62) Divisional to Application Number	:NA
Filing Date	:NA

(71)**Name of Applicant :**
1)Chandigarh University
Address of Applicant :National Highway 95, Chandigarh-Ludhiana Highway, Mohali, Punjab 140413, India. Mohali Punjab India
2)Chandigarh University Technology Business Incubator
(72)**Name of Inventor :**
1)Nishant Ranjan

(57) Abstract :
An adaptable four-wheeler sheltering device comprises a frame 1 having a panel 2 developed to be installed on roof of a four-wheeler, plurality of mounts 3 for affixing the frame 1 on the four-wheeler's roof with plurality of electromagnetically powered suction units 10, an artificial intelligence-based imaging unit 4 to determine dimensions of the four-wheeler's roof, motorized sliding to translate the mounts 3 to a required position, a temperature sensor for monitoring real time temperature of surrounding, plurality of telescopically operated horizontal and vertical links 6 for covering entire roof of the four-wheeler, a proximity sensor for detecting presence of any object in vicinity of the frame 1 and a laser measurement sensor for determining area of the four-wheeler's roof.

No. of Pages : 14 No. of Claims : 5

(12) PATENT APPLICATION PUBLICATION
(21) Application No.202411025397 A
(19) INDIA
(22) Date of filing of Application :28/03/2024
(43) Publication Date : 07/11/2025

(54) Title of the invention : AUTOMATED ANIMAL DETERRENCE SYSTEM FOR SECURITY

(51) International classification	:A01M0029160000, A01M0031000000, H04N0007180000, G08B0015000000, H01J0061020000
(31) Priority Document No	:NA
(32) Priority Date	:NA
(33) Name of priority country	:NA
(86) International Application No	:NA
Filing Date	:NA
(87) International Publication No	: NA
(61) Patent of Addition to Application Number	:NA
Filing Date	:NA
(62) Divisional to Application Number	:NA
Filing Date	:NA

(71)**Name of Applicant :**
1)Chandigarh University
Address of Applicant :National Highway 95, Chandigarh-Ludhiana Highway, Mohali, Punjab 140413, India. Mohali Punjab India
2)Chandigarh University Technology Business Incubator
(72)**Name of Inventor :**
1)Sandeep Singh

(57) Abstract :
An automated animal deterrence system for security, comprising a pair of frameworks 1 developed to be installed on main and back entrance of a premises, an artificial intelligence-based imaging unit 2 to detect presence of an wild animal in a pre-fed range of the surroundings, plurality of HID (High-intensity discharge lamps) lamps 3 to produce a high intensity light in a targeted direction of the animal for startling the animal in view of preventing the animal to enter in the premises, plurality of speakers 4 to produce loud sound frequencies for deterring the animal in view of allowing the animal to move away from the premises and plurality of electronically controlled nozzles 5 to dispense water stored in a chamber 6 integrated with the nozzles 5.

No. of Pages : 14 No. of Claims : 3

(12) PATENT APPLICATION PUBLICATION
(21) Application No.202411025398 A
(19) INDIA
(22) Date of filing of Application :28/03/2024
(43) Publication Date : 07/11/2025

(54) Title of the invention : DAMAGED/ BROKEN PIPE REPAIRING ASSISTIVE DEVICE

(51) International classification	:F16L0055165000, F16L0055180000, G06F0003041000, B25J0011000000, H04W0004800000
(31) Priority Document No	:NA
(32) Priority Date	:NA
(33) Name of priority country	:NA
(86) International Application No	:NA
Filing Date	:NA
(87) International Publication No	: NA
(61) Patent of Addition to Application Number	:NA
Filing Date	:NA
(62) Divisional to Application Number	:NA
Filing Date	:NA

(71)**Name of Applicant :**
1)Chandigarh University
Address of Applicant :National Highway 95, Chandigarh-Ludhiana Highway, Mohali, Punjab 140413, India. Mohali Punjab India
2)Chandigarh University Technology Business Incubator
(72)**Name of Inventor :**
1)Shailendra Singh Rajput

(57) Abstract :
A damaged/ broken pipe repairing assistive device, comprising a cuboidal body 1 developed to be positioned on a ground surface in proximity to a pipeline, an artificial intelligence-based imaging unit 2 installed on the body 1 evaluates a 3D (three-dimension) mapping of the surroundings, a touch interactive display panel 3 mapped on the body 1 for displaying the evaluated mapping, a robotic arm 4 installed on the body 1 to access a multi-sectioned chamber 5 arranged within the body 1 for gripping a tool and working in sync for mending the pipeline and a vacuum-based cleaning unit 6 installed on the body 1 for withdrawing debris and pipe dust generating during repairing the pipe.

No. of Pages : 14 No. of Claims : 5

(12) PATENT APPLICATION PUBLICATION
(21) Application No.202411025399 A
(19) INDIA
(22) Date of filing of Application :28/03/2024
(43) Publication Date : 07/11/2025

(54) Title of the invention : ADAPTABLE TREE-BARK STRIPS ROLL MANUFACTURING ASSISTIVE DEVICE

(51) International classification	:B65G0023080000, B65H0035000000, B08B0001000000, G06F0003041000, G06F0003023000
(31) Priority Document No	:NA
(32) Priority Date	:NA
(33) Name of priority country	:NA
(86) International Application No	:NA
Filing Date	:NA
(87) International Publication No	: NA
(61) Patent of Addition to Application Number	:NA
Filing Date	:NA
(62) Divisional to Application Number	:NA
Filing Date	:NA

(71)**Name of Applicant :**
1)Chandigarh University
Address of Applicant :National Highway 95, Chandigarh-Ludhiana Highway, Mohali, Punjab 140413, India. Mohali Punjab India
2)Chandigarh University Technology Business Incubator
(72)**Name of Inventor :**
1)Pooja Bansal

(57) Abstract :
An adaptable tree-bark strips roll manufacturing assistive device, comprises a platform 1 having a first and second portion positioned on a fixed surface, a plate 2 enables the user to accommodate a tree-bark sheet, a touch interactive display panel 3 enables user to provide input specifications, a LiDAR sensor detects a rough surface, a robotic link 4 provides a scrubbing movement by a buffing pad 5, an imaging unit 6 captures images of the vicinity of the platform 1, a motorized cutter 7 provides translation to the cutter 7, a motorized pusher 8 extends for applying an appropriate pressure, a first conveyer belt 9 translates the strips towards a motorized roller, a robotic arm acquires a grip of ends of the strip, a V-shaped member 11 engages strip with the roller, a gripper grips soaked strip roll, a second conveyer 12 belt translates each of the cut strips sideward.

No. of Pages : 16 No. of Claims : 4

(12) PATENT APPLICATION PUBLICATION
(21) Application No.202411025439 A
(19) INDIA
(22) Date of filing of Application :28/03/2024
(43) Publication Date : 07/11/2025

(54) Title of the invention : A SYSTEM AND METHOD FOR OPERATING A SWITCH ASSEMBLY AND PERFORMING FAILURE ANALYSIS

(51) International classification	:G06F0003010000, G06F0003041000, H03K0017960000, G06F0003044000, G06F0003048800
(31) Priority Document No	:NA
(32) Priority Date	:NA
(33) Name of priority country	:NA
(86) International Application No	:NA
Filing Date	:NA
(87) International Publication No	: NA
(61) Patent of Addition to Application Number	:NA
Filing Date	:NA
(62) Divisional to Application Number	:NA
Filing Date	:NA

(71)**Name of Applicant :**
1)Uno Mindarika Private Limited
Address of Applicant :B-64/1 Wazirpur, Industrial Area, NA, Delhi, New Delhi - 110052, India New Delhi Delhi India
(72)**Name of Inventor :**
1)MISHRA, Chandra Bhushan
2)GUPTA, Anubhav
3)VERMA, Siddhartha
4)DHAIYA, Naveen

(57) Abstract :
Disclosed is a system (200) and method for operating and detecting failure of a switch assembly (300). The system includes a controller (102) in communication with a touch interface module (112) configured to generate a first signal based on changes in parameters observed in response to a user gesture on a touch panel surface therein, an optical sensing module (114) configured to generate a second signal in response to the user gesture, and a haptic actuator module (116) configured to generate haptic feedback. The controller (102) is configured to detect the user gesture on the touch panel surface from the first signal and the second signal after conducting a failure analysis to evaluate the validity of the user gesture. Further, the controller is communicatively coupled to an Electronic Control Unit (804) for receiving signals from the controller and generating control signals corresponding to starting a vehicle and stopping the vehicle.

No. of Pages : 45 No. of Claims : 13

(12) PATENT APPLICATION PUBLICATION
(21) Application No.202411025440 A
(19) INDIA
(22) Date of filing of Application :28/03/2024
(43) Publication Date : 07/11/2025

(54) Title of the invention : AUTOMATED GLASS REPLACEMENT DEVICE FOR SEVEN-SEATER

(51) International classification	:E01H0001080000, G08B0021040000, B61B0001020000, B64C0039020000, A47L0009220000
(31) Priority Document No	:NA
(32) Priority Date	:NA
(33) Name of priority country	:NA
(86) International Application No	:NA
Filing Date	:NA
(87) International Publication No	: NA
(61) Patent of Addition to Application Number	:NA
Filing Date	:NA
(62) Divisional to Application Number	:NA
Filing Date	:NA

(71)**Name of Applicant :**
1)Chandigarh University
Address of Applicant :National Highway 95, Chandigarh-Ludhiana Highway, Mohali, Punjab 140413, India. Mohali Punjab India
2)Chandigarh University Technology Business Incubator
(72)**Name of Inventor :**
1)Jyoti Taunk

(57) Abstract :
An automated glass replacement device for seven-seater, comprising, a body 1 developed to be positioned on a ground surface, an artificial intelligence-based imaging unit 2 installed on the body 1 for capturing multiple images in vicinity of the body 1, to determine positioning of a permanent glass of a seven-seater, a hydraulically operated L-shaped rod 3 mounted on the body 1 for positioning a disc 4 integrated on the rod 3 parallel to the glass, multiple extendable links 5 are integrated on a disc 4 for positioning a suction unit 6 integrated on each of the links 5 on the glass, a motorized first gripper 8 installed on the platform to extend for positioning a chisel 7 integrated on the first gripper 8 over detected clots.

No. of Pages : 17 No. of Claims : 3

(12) PATENT APPLICATION PUBLICATION
(21) Application No.202411025441 A
(19) INDIA
(22) Date of filing of Application :28/03/2024
(43) Publication Date : 07/11/2025

(54) Title of the invention : AUTOMATED TAPING DEVICE FOR TRACTORS

(51) International classification	:B65B0013320000, G01N0015140000, B25J0013000000, B67B0007180000, B25J0009000000	(71)**Name of Applicant :** **1)Chandigarh University** Address of Applicant :National Highway 95, Chandigarh-Ludhiana Highway, Mohali, Punjab 140413, India. Mohali Punjab India **2)Chandigarh University Technology Business Incubator**
(31) Priority Document No	:NA	(72)**Name of Inventor :**
(32) Priority Date	:NA	**1)Jagpreet Singh**
(33) Name of priority country	:NA	
(86) International Application No	:NA	
Filing Date	:NA	
(87) International Publication No	: NA	
(61) Patent of Addition to Application Number	:NA	
Filing Date	:NA	
(62) Divisional to Application Number	:NA	
Filing Date	:NA	

(57) Abstract :
A automated taping device for tractors, comprises of a body 1 developed to be positioned on a ground surface, an artificial intelligence-based imaging unit 2 for capturing and processing multiple images in vicinity of the body 1, an ultrasonic sensor for monitoring edges of the tractor, a multi-sectioned chamber 3 for storing radium tape reel, robotic arms 4 for engaging the gripped reel on the first roller 5, a pair of motorized clippers 6 to acquire a grip on free end of the tap, a motorized gripper to apply the tape on the evaluates edges of tractor, a telescopically operated L-shaped bar 7 to extend/retract for positioning a motorized second roller 8 over the applied roller, motorized second roller 8 for evenly pressing the applied tape on the edges in order to apply the tape on the tractor.

No. of Pages : 15 No. of Claims : 3

(12) PATENT APPLICATION PUBLICATION
(21) Application No.202411025442 A
(19) INDIA
(22) Date of filing of Application :28/03/2024
(43) Publication Date : 07/11/2025

(54) Title of the invention : CLUTCH HOUSING CLEANING DEVICE FOR HEAVY VEHICLE

(51) International classification	:G08G0001000000, G05D0001020000, B66F0009060000, G05D0001000000, B25J0005000000	(71)**Name of Applicant :** **1)Chandigarh University** Address of Applicant :National Highway 95, Chandigarh-Ludhiana Highway, Mohali, Punjab 140413, India. Mohali Punjab India **2)Chandigarh University Technology Business Incubator**
(31) Priority Document No	:NA	(72)**Name of Inventor :**
(32) Priority Date	:NA	**1)Nishant Ranjan**
(33) Name of priority country	:NA	
(86) International Application No	:NA	
Filing Date	:NA	
(87) International Publication No	: NA	
(61) Patent of Addition to Application Number	:NA	
Filing Date	:NA	
(62) Divisional to Application Number	:NA	
Filing Date	:NA	

(57) Abstract :
A clutch housing cleaning device for heavy vehicle, comprising a platform 1 positioned on a ground surface underneath a heavy vehicle and configured with plurality of motorized omnidirectional wheel, a computing unit gives input commands for cleaning clutch housing of vehicle, an artificial intelligence-based imaging unit 3 detects exact location of clutch housing of vehicle, accordingly wheels 2 maneuver platform 1 in proximity to clutch housing, an electronic nozzle 4 attached with a chamber 5 for dispensing diesel on housing for loosening oil, a motorized brush 7 via an L-shaped telescopically operated rod 6 scrubs housing, a motorized two-axis lead screw arrangement 8 provide suitable bi-directional motion to rod 6, an electronic valve 9 attached with a container 10 for dispensing corrosion removal solution, a robotic arm 12 via an abrasive pad 11 removes corrosion.

No. of Pages : 17 No. of Claims : 6

(12) PATENT APPLICATION PUBLICATION
(21) Application No.202411024924 A
(19) INDIA
(22) Date of filing of Application :27/03/2024
(43) Publication Date : 07/11/2025

(54) Title of the invention : AUTOMATED WOOD INLAY DESIGNING DEVICE

(51) International classification	:B23K0026380000, H01Q0001220000, B23K0026700000, H05K0003000000, A43C0011160000	(71)**Name of Applicant :** **1)Chandigarh University** Address of Applicant :National Highway 95, Chandigarh-Ludhiana Highway, Mohali, Punjab 140413, India. Mohali Punjab India **2)Chandigarh University Technology Business Incubator**
(31) Priority Document No	:NA	(72)**Name of Inventor :**
(32) Priority Date	:NA	**1)Pooja Bansal**
(33) Name of priority country	:NA	
(86) International Application No	:NA	
Filing Date	:NA	
(87) International Publication No	: NA	
(61) Patent of Addition to Application Number	:NA	
Filing Date	:NA	
(62) Divisional to Application Number	:NA	
Filing Date	:NA	

(57) Abstract :
An automated wood inlay designing device, comprising a housing 1 positioned on a fixed surface, a display panel 2 arranged on the housing 1 to receive input, a lid integrated on the housing 1 for inserting wooden template, a platform arranged inside the housing 1 for accommodating the wooden template, an imaging unit 4 installed inside the body for monitoring pattern of the template, a bar 5 suspended from ceiling of the housing 1 for positioning a laser cutter in proximity to the platform, a robotic arm 6 installed inside the housing 1 for gripping and positioning a wooden board stored in a storage chamber 7 onto the platform, a motorized drilling unit 9 suspended on the housing 1 by means of a pole 8 to drill for excavating a protruded portion of the template, a buffing pad integrated on the pole 8 for polishing the surface of the board.

No. of Pages : 17 No. of Claims : 3

(12) PATENT APPLICATION PUBLICATION
(21) Application No.202411024925 A
(19) INDIA
(22) Date of filing of Application :27/03/2024
(43) Publication Date : 07/11/2025

(54) Title of the invention : AUTOMATED ROAD ROLLING DRUM REPAIRING DEVICE

(51) International classification	:G01S0017931000, G01S0017890000, E01C0023090000, B23P0006000000, B21D0001060000
(31) Priority Document No	:NA
(32) Priority Date	:NA
(33) Name of priority country	:NA
(86) International Application No	:NA
Filing Date	:NA
(87) International Publication No	: NA
(61) Patent of Addition to Application Number	:NA
Filing Date	:NA
(62) Divisional to Application Number	:NA
Filing Date	:NA

(71)**Name of Applicant :**
1)Chandigarh University
Address of Applicant :National Highway 95, Chandigarh-Ludhiana Highway, Mohali, Punjab 140413, India. Mohali Punjab India
2)Chandigarh University Technology Business Incubator
(72)**Name of Inventor :**
1)Sandeep Singh

(57) Abstract :
An automated road rolling drum repairing device, comprises of a cuboidal body positioned over a ground surface in proximity to a road rolling drum that is to be repaired, an artificial intelligence based imaging unit for detecting location of center shaft of the drum, a motorized jack installed between each of the clamps and body to elevate the clamps in a manner to lift the drum from the surface, a LiDAR sensor to monitor surface leveling of the drum, a linear to provide reciprocatory motion to the hammer for hitting the concave portion of the dent in view of removing the dent, a crack detection sensor to determine presence of cracks over surface of the drum, and a welding unit to perform welding of the cracks, thereby repairing the drum.

No. of Pages : 18 No. of Claims : 6

(12) PATENT APPLICATION PUBLICATION
(21) Application No.202411024926 A
(19) INDIA
(22) Date of filing of Application :27/03/2024
(43) Publication Date : 07/11/2025

(54) Title of the invention : AUTOMATED BOXES/ CARTOONS SORTING DEVICE

(51) International classification	:B65G0043020000, G06F0003160000, A63B0071060000, G06Q0050100000, B08B0003020000	(71)**Name of Applicant :** **1)Chandigarh University** Address of Applicant :National Highway 95, Chandigarh-Ludhiana Highway, Mohali, Punjab 140413, India. Mohali Punjab India **2)Chandigarh University Technology Business Incubator**
(31) Priority Document No	:NA	(72)**Name of Inventor :**
(32) Priority Date	:NA	**1)Sanjeet Singh**
(33) Name of priority country	:NA	
(86) International Application No	:NA	
Filing Date	:NA	
(87) International Publication No	: NA	
(61) Patent of Addition to Application Number	:NA	
Filing Date	:NA	
(62) Divisional to Application Number	:NA	
Filing Date	:NA	

(57) Abstract :
An automated boxes/ cartoons sorting device comprises of a, a cuboidal body developed to be positioned horizontally on a fixed surface, suction cups are configured on bottom portion of the body for affixing the body on the surface, a pair of motorized rollers 6 arranged installed with the body by pair of telescopically operated rod 7 for positioning the roller, an artificial intelligence-based imaging unit 5 installed on the body for capturing and processing multiple images of surroundings, plurality of weight sensors installed on the primary conveyor belt 1 for monitoring individual dimensions and weight of the box/ cartoon, plurality of circular plates 4 of varying dimensions carved on the body with a pair of secondary conveyor belts 3 for evaluating an optimum orientation of the secondary conveyor belts 3.

No. of Pages : 15 No. of Claims : 3

(12) PATENT APPLICATION PUBLICATION
(21) Application No.202411024927 A
(19) INDIA
(22) Date of filing of Application :27/03/2024
(43) Publication Date : 07/11/2025

(54) Title of the invention : HAND-HELD DRILL BIT SHARPENING ASSISTIVE DEVICE

(51) International classification	:A61B0017160000, B23B0031107000, A61B0017170000, G01F0001580000, G01V0001420000
(31) Priority Document No	:NA
(32) Priority Date	:NA
(33) Name of priority country	:NA
(86) International Application No	:NA
Filing Date	:NA
(87) International Publication No	: NA
(61) Patent of Addition to Application Number	:NA
Filing Date	:NA
(62) Divisional to Application Number	:NA
Filing Date	:NA

(71)**Name of Applicant :**
1)Chandigarh University
Address of Applicant :National Highway 95, Chandigarh-Ludhiana Highway, Mohali, Punjab 140413, India. Mohali Punjab India
2)Chandigarh University Technology Business Incubator
(72)**Name of Inventor :**
1)Nishant Ranjan

(57) Abstract :
A hand-held drill bit sharpening assistive device comprises of a cylindrical shaped hollow frame 1 having a first as well as second portion developed to accommodate a drill bit that is to be sharpened, a handle 2 for providing grip to the user while handling the frame 1, a laser acuity sensor for detecting diameter of the drill bit, a motorized iris lid 4 for gripping the mouth portion of the drill bit in a secured manner, a circular cylindrical member 5 having an robotic gripper 7 for gripping the accommodated drill as well as position the drill bit within the member 5, a magneto-inductive sensor for detecting sharpness of the drill bit, a capacitance sensor for determining material of the drill bit, and an electronic nozzle 6 for dispensing water on the tip portion of the drill bit.

No. of Pages : 16 No. of Claims : 6

(12) PATENT APPLICATION PUBLICATION
(21) Application No.202411025400 A
(19) INDIA
(22) Date of filing of Application :28/03/2024
(43) Publication Date : 07/11/2025

(54) Title of the invention : PORTABLE MULTI-PURPOSE STORAGE ASSISTIVE DEVICE

(51) International classification	:H04W0074080000, H04N0001000000, B60N0002280000, G06F0003023000, A47C0001140000
(31) Priority Document No	:NA
(32) Priority Date	:NA
(33) Name of priority country	:NA
(86) International Application No	:NA
Filing Date	:NA
(87) International Publication No	: NA
(61) Patent of Addition to Application Number	:NA
Filing Date	:NA
(62) Divisional to Application Number	:NA
Filing Date	:NA

(71)**Name of Applicant :**
1)Chandigarh University
Address of Applicant :National Highway 95, Chandigarh-Ludhiana Highway, Mohali, Punjab 140413, India. Mohali Punjab India
2)Chandigarh University Technology Business Incubator
(72)**Name of Inventor :**
1)Geetika Sukheja

(57) Abstract :
A portable multi-purpose storage assistive device comprises of a frame 1 having a C-shaped clamp 2 at one end of the frame 1 that is accessed by a user to lock the frame 1 beneath headrest of a car-seat of a vehicle, an artificial intelligence-based imaging unit 3 installed on the frame 1 to determine position of the user on back seat of the vehicle, a microphone integrated on the frame 1 to provide input specifications regarding the user's requirements, multiple telescopically operated rods 6 arranged on the frame 1 for deploying a hook 5 integrated on each of the rods 6 in view of hanging multiple bags. a U-shaped member 7 arranged on the frame 1 via a motorized ball and socket joint to provide a controlled movement to the member 7 for getting deployed for enabling the user to accommodate a computing unit in the member 7.

No. of Pages : 16 No. of Claims : 4

(12) PATENT APPLICATION PUBLICATION
(21) Application No.202411025401 A
(19) INDIA
(22) Date of filing of Application :28/03/2024
(43) Publication Date : 07/11/2025

(54) Title of the invention : DEVICE FOR FORMING GROOVES ON A METAL PIPE

(51) International classification	: B21C3/16, B21C37/20, B21D17/00, G06T7/00, B25J19/02, B25J15/00, G01S17/89	(71)**Name of Applicant :** **1)Chandigarh University** Address of Applicant :National Highway 95, Chandigarh-Ludhiana Highway, Mohali, Punjab 140413, India. Mohali Punjab India **2)Chandigarh University Technology Business Incubator** (72)**Name of Inventor :** **1)Lochan Sharma**
(31) Priority Document No	:NA	
(32) Priority Date	:NA	
(33) Name of priority country	:NA	
(86) International Application No	:NA	
Filing Date	:NA	
(87) International Publication No	: NA	
(61) Patent of Addition to Application Number	:NA	
Filing Date	:NA	
(62) Divisional to Application Number	:NA	
Filing Date	:NA	

(57) Abstract :
A device for forming grooves on a metal pipe, comprises rectangular base 1 platform having a fixed vertical frame 2, a motorized chuck 3 holds pipe at first location, pneumatic pusher applies squeezing force along lateral surface of pipe, sliding vertical frame 4 enables sliding vertical frame 4 to move away or towards fixed vertical frame 2, iris lid 5 holds pipe at second location, a sensing module measures dimensions of pipe and a hardness of pipe, an imaging unit 7 captures multiple images in vicinity of the base 1, a speaker 8 generates audio alert to notify user regarding to keep safe distance from device, four telescopic legs 9 uplift the base 1 on the surface, motorized omni-directional wheels 10 movement of the device from one location to another, a pneumatic brake locks device, a microphone 11 receives audio commands from user to start device.

No. of Pages : 16 No. of Claims : 4

(12) PATENT APPLICATION PUBLICATION
(21) Application No.202411025402 A
(19) INDIA
(22) Date of filing of Application :28/03/2024
(43) Publication Date : 07/11/2025

(54) Title of the invention : AUTOMATED HEATING ROD MANUFACTURING DEVICE FOR WATER HEATERS

(51) International classification	:B25J0013080000, B25J0019020000, H04L0009320000, G01N0035000000, G07F0017340000
(31) Priority Document No	:NA
(32) Priority Date	:NA
(33) Name of priority country	:NA
(86) International Application No	:NA
Filing Date	:NA
(87) International Publication No	: NA
(61) Patent of Addition to Application Number	:NA
Filing Date	:NA
(62) Divisional to Application Number	:NA
Filing Date	:NA

(71)**Name of Applicant :**
1)Chandigarh University
Address of Applicant :National Highway 95, Chandigarh-Ludhiana Highway, Mohali, Punjab 140413, India. Mohali Punjab India
2)Chandigarh University Technology Business Incubator
(72)**Name of Inventor :**
1)Vinay Kumar

(57) Abstract :
An automated heating rod manufacturing device for water heaters, comprising a housing 1 positioned on a ground surface and installed with a chamber 2 , a touch interactive display screen 3 for enabling a user to give input commands for manufacturing heating rod, a telescopically operated gripper for accessing chamber 2 to pick one of rods and position rod vertically in a slot 5 , a motorized iris lid 6 for gripping rod in a secured manner, an artificial intelligence-based imaging unit 8 for detecting filling of powder in rod, wherein upon filling of powder in rod, a robotic arm 9 installed within housing 1 equipped with a rectangular member 10 for taking a sealant mixture from a container 11 , and a circular motorized disc 14 installed on platform via an L-shaped link 12 for inserting one end of rod in unit.

No. of Pages : 19 No. of Claims : 7

(12) PATENT APPLICATION PUBLICATION
(21) Application No.202411025403 A
(19) INDIA
(22) Date of filing of Application :28/03/2024
(43) Publication Date : 07/11/2025

(54) Title of the invention : AUTOMATED WOOD BENDING DEVICE

(51) International classification	:A61B0017000000, B05C0017010000, A61B0090300000, A61B0034200000, A47G0019180000
(31) Priority Document No	:NA
(32) Priority Date	:NA
(33) Name of priority country	:NA
(86) International Application No	:NA
Filing Date	:NA
(87) International Publication No	: NA
(61) Patent of Addition to Application Number	:NA
Filing Date	:NA
(62) Divisional to Application Number	:NA
Filing Date	:NA

(71)**Name of Applicant :**
1)Chandigarh University
Address of Applicant :National Highway 95, Chandigarh-Ludhiana Highway, Mohali, Punjab 140413, India. Mohali Punjab India
2)Chandigarh University Technology Business Incubator
(72)**Name of Inventor :**
1)Rashi Tyagi

(57) Abstract :
An automated wood bending device comprises a body 1 arranged with a chamber 2 having an inlet accessed by a user for accommodating multiple wooden strips to be bent, a touch interactive display panel 3arranged on the body 1 for user input, an artificial intelligence-based imaging unit 4 is installed inside the body 1 determine positioning of the strips in the chamber 2, a pair of robotic arms 5 installed inside the body 1 to grip the strip from the chamber 2, a motorized iris lid 7 for allowing the arms for accommodating the strips inside a vessel, a boiler, filled with water configured with the body 1 to produce steam, a timer integrated with the microcontroller to monitor time duration of passing of steam, and plurality of platforms 8 arranged inside the body 1 and integrated with multiple molds 9 accessed by the arms for engaging the strips.

No. of Pages : 15 No. of Claims : 3

(12) PATENT APPLICATION PUBLICATION
(21) Application No.202411025443 A
(19) INDIA
(22) Date of filing of Application :28/03/2024
(43) Publication Date : 07/11/2025

(54) Title of the invention : ADJUSTABLE WORKPIECE MEASUREMENT ASSISTIVE DEVICE

(51) International classification	:H01L0021670000, B25J0015000000, G01B0021040000, G01B0011060000, B25J0015020000
(31) Priority Document No	:NA
(32) Priority Date	:NA
(33) Name of priority country	:NA
(86) International Application No	:NA
Filing Date	:NA
(87) International Publication No	: NA
(61) Patent of Addition to Application Number	:NA
Filing Date	:NA
(62) Divisional to Application Number	:NA
Filing Date	:NA

(71)**Name of Applicant :**
1)Chandigarh University
Address of Applicant :National Highway 95, Chandigarh-Ludhiana Highway, Mohali, Punjab 140413, India. Mohali Punjab India
2)Chandigarh University Technology Business Incubator
(72)**Name of Inventor :**
1)Jyoti Taunk

(57) Abstract :
An adjustable workpiece measurement assistive device, comprising, a body 1 developed to be positioned on a fixed surface, an imaging unit 2 is installed on the body 1 to determine thickness of the surface, a telescopically operated inverted L-shaped rod 6 to get extend/retract in a downward direction for acquiring a grip over the surface in view of providing stability to the body 1 on the surface, the body 1 arranged with a robotic arm 7 for acquiring a grip on the workpiece, a motorized gripper 9 to position a brush 3 integrated on the gripper 9 to perform cleaning of the workpiece, and a movable jaw to translate the movable jaw 4 towards a permanent jaw 5 arranged on other side of the body 1 in order to acquire a grip on the workpiece.

No. of Pages : 15 No. of Claims : 3

(12) PATENT APPLICATION PUBLICATION
(21) Application No.202411025444 A
(19) INDIA
(22) Date of filing of Application :28/03/2024
(43) Publication Date : 07/11/2025

(54) Title of the invention : MANURE SPREADING ASSISTIVE DEVICE FOR AGRICULTURAL FIELDS

(51) International classification	:G01N0033240000, A01C0007200000, A01G0025160000, G05D0001020000, G06Q0010060000	(71)**Name of Applicant :** **1)Chandigarh University** Address of Applicant :National Highway 95, Chandigarh-Ludhiana Highway, Mohali, Punjab 140413, India. Mohali Punjab India **2)Chandigarh University Technology Business Incubator**
(31) Priority Document No	:NA	(72)**Name of Inventor :**
(32) Priority Date	:NA	**1)Deepak Kukkar**
(33) Name of priority country	:NA	
(86) International Application No	:NA	
Filing Date	:NA	
(87) International Publication No	: NA	
(61) Patent of Addition to Application Number	:NA	
Filing Date	:NA	
(62) Divisional to Application Number	:NA	
Filing Date	:NA	

(57) Abstract :
A manure spreading assistive device for agricultural fields, comprising a a T-shaped telescopic frame 1 having a first and second portion, wherein a pair of omnidirectional wheels 2 for allowing movement to frame 1, an ultrasonic sensor for detecting height of a user, a motion sensor for detecting movement of frame 1, a motorized roller 3 for spreading over agricultural field, a pair of supporting links 4 for rotating on its axis, plurality of motorized iris holes 5 for allowing dispensing of manure over field, a sensing module for monitoring parameters including pH level and nutritional content in soil, a moisture sensor to detect moisture content, plurality of heating unit to produce an optimum amount of heat.

No. of Pages : 15 No. of Claims : 5

(12) PATENT APPLICATION PUBLICATION
(21) Application No.202411025445 A
(19) INDIA
(22) Date of filing of Application :28/03/2024
(43) Publication Date : 07/11/2025

(54) Title of the invention : ROAD COURSE DEMOLISHING ASSISTIVE DEVICE FOR CONSTRUCTION OF NEW ROADS

(51) International classification	:G06F0003041000, G08G0001096800, G01B0017000000, E04G0023080000, F16M0011240000
(31) Priority Document No	:NA
(32) Priority Date	:NA
(33) Name of priority country	:NA
(86) International Application No	:NA
Filing Date	:NA
(87) International Publication No	: NA
(61) Patent of Addition to Application Number	:NA
Filing Date	:NA
(62) Divisional to Application Number	:NA
Filing Date	:NA

(71)**Name of Applicant :**
1)Chandigarh University
Address of Applicant :National Highway 95, Chandigarh-Ludhiana Highway, Mohali, Punjab 140413, India. Mohali Punjab India
2)Chandigarh University Technology Business Incubator
(72)**Name of Inventor :**
1)Shailendra Singh Rajput

(57) Abstract :
A road course demolishing assistive device comprises a cuboidal body 1 configured with a pair of track wheels 2 for providing movement to the body, an artificial intelligence-based imaging unit 3 installed on the body evaluates a 3D (three-dimension) mapping of the surroundings as well as determine dimensions of surface course of the road, a touch interactive display panel 4 mapped on the body for displaying the evaluated mapping, a pair of inverted L-shaped bars 5 arranged on the body positioning a levelling arrangement 6 attached with the bars, a LiDAR sensor is installed on the body for detecting dimensions including length and width of the road course, a hydraulically operated plunger installed on apex portion of each of the vertically oriented link rods, and a tactile sensor is embedded within the rods to monitor hardness of the road course.

No. of Pages : 16 No. of Claims : 4

(12) PATENT APPLICATION PUBLICATION
(21) Application No.202411025446 A
(19) INDIA
(22) Date of filing of Application :28/03/2024
(43) Publication Date : 07/11/2025

(54) Title of the invention : AUTOMATED METALLIC RODS ASSEMBLING ASSISTIVE DEVICE

(51) International classification	:G06F0003041000, G03G0015000000, B65H0037040000, B31F0005020000, H04M0001724120
(31) Priority Document No	:NA
(32) Priority Date	:NA
(33) Name of priority country	:NA
(86) International Application No	:NA
Filing Date	:NA
(87) International Publication No	: NA
(61) Patent of Addition to Application Number	:NA
Filing Date	:NA
(62) Divisional to Application Number	:NA
Filing Date	:NA

(71)**Name of Applicant :**
1)Chandigarh University
Address of Applicant :National Highway 95, Chandigarh-Ludhiana Highway, Mohali, Punjab 140413, India. Mohali Punjab India
2)Chandigarh University Technology Business Incubator
(72)**Name of Inventor :**
1)Nishant Ranjan

(57) Abstract :
An automated metallic rods assembling assistive device, comprising a platform 1 having a first and second section wherein platform 1 is developed to be positioned on a fixed surface, a touch interactive display panel 2 mapped on platform 1 that is accessed by user to provide input specifications regarding a user-desired bundles of multiple metallic rods, an artificial intelligence-based imaging unit 3 mapped on the platform 1 to evaluate a particular distance of rod that is to be cut to achieve a user-specified length of rods, a motorized cutter 4 mounted on platform 1 by means of a telescopically operated link 5 that is actuated by microcontroller for cutting rods for obtaining user-specified length of rods, a C-shaped clamp 10 positioned on platform 1 to acquire a grip of bundle from second section for positioning bundles in a chamber positioned on platform 1.

No. of Pages : 18 No. of Claims : 4

(12) PATENT APPLICATION PUBLICATION
(21) Application No.202411024928 A
(19) INDIA
(22) Date of filing of Application :27/03/2024
(43) Publication Date : 07/11/2025

(54) Title of the invention : NUT CRACKING ASSISTIVE DEVICE

(51) International classification	:G10L0015220000, A61B0017000000, G06Q0050000000, B02C0018220000, F16B0037040000
(31) Priority Document No	:NA
(32) Priority Date	:NA
(33) Name of priority country	:NA
(86) International Application No	:NA
Filing Date	:NA
(87) International Publication No	: NA
(61) Patent of Addition to Application Number	:NA
Filing Date	:NA
(62) Divisional to Application Number	:NA
Filing Date	:NA

(71)**Name of Applicant :**
1)Chandigarh University
Address of Applicant :National Highway 95, Chandigarh-Ludhiana Highway, Mohali, Punjab 140413, India. Mohali Punjab India
2)Chandigarh University Technology Business Incubator
(72)**Name of Inventor :**
1)Amit Verma

(57) Abstract :
A nut cracking assistive device comprises of an elongated body 1 having proximal and distal end, a pair of semi-spherical members 3 installed with the distal end by means of a motorized hinge joints, an artificial intelligence based imaging unit 4 installed over the body 1 determines positioning of the nut within the members 3, multiple hydraulic pushers 5 installed over inner periphery of the members 3 to apply pressure over the nut in view of cracking shell of the nut, a microphone 6 is installed over the body 1 to receive voice command of the user regrading cutting of the nut and multiple blades 7 installed over inner periphery of the members 3 each by means of a hydraulic links to enable the blades 7 to cut the nut.

No. of Pages : 15 No. of Claims : 5

(12) PATENT APPLICATION PUBLICATION
(21) Application No.202411024930 A
(19) INDIA
(22) Date of filing of Application :27/03/2024
(43) Publication Date : 07/11/2025

(54) Title of the invention : TRIMMED FACIAL HAIR COLLECTION ASSISTIVE DEVICE

(51) International classification	:G10L0015220000, A45D0044160000, G06F0003010000, G06F0003160000, A61H0001020000
(31) Priority Document No	:NA
(32) Priority Date	:NA
(33) Name of priority country	:NA
(86) International Application No	:NA
Filing Date	:NA
(87) International Publication No	: NA
(61) Patent of Addition to Application Number	:NA
Filing Date	:NA
(62) Divisional to Application Number	:NA
Filing Date	:NA

(71)**Name of Applicant :**
1)Chandigarh University
Address of Applicant :National Highway 95, Chandigarh-Ludhiana Highway, Mohali, Punjab 140413, India. Mohali Punjab India
2)Chandigarh University Technology Business Incubator
(72)**Name of Inventor :**
1)Sanjeet Singh

(57) Abstract :
A trimmed facial hair collection assistive device, comprising a curved frame 1 configured with plurality of plates 2 interconnected with each of or by means of plurality of motorized primary hinge joints, an artificial intelligence-based imaging unit determines dimensions of neck portion, a microphone 4 receives voice command of user regrading deploying of beard hair collecting means, plurality of extendable flaps equipped with a flexible sheet deploys sheet in front of user, a proximity sensor monitors distance of a fixed surface in front of user from frame 1. a suction cup 6 affixes flaps with surface and a vibration unit to transmit vibrations to the sheet.

No. of Pages : 18 No. of Claims : 6

(12) PATENT APPLICATION PUBLICATION
(21) Application No.202411024931 A
(19) INDIA
(22) Date of filing of Application :27/03/2024
(43) Publication Date : 07/11/2025

(54) Title of the invention : AUTOMATED INSECT COLLECTION DEVICE

(51) International classification	:G06Q0030060000, A61H0003040000, B62B0005000000, H04L0067564000, G05D0001000000
(31) Priority Document No	:NA
(32) Priority Date	:NA
(33) Name of priority country	:NA
(86) International Application No	:NA
Filing Date	:NA
(87) International Publication No	: NA
(61) Patent of Addition to Application Number	:NA
Filing Date	:NA
(62) Divisional to Application Number	:NA
Filing Date	:NA

(71)**Name of Applicant :**
1)Chandigarh University
Address of Applicant :National Highway 95, Chandigarh-Ludhiana Highway, Mohali, Punjab 140413, India. Mohali Punjab India
2)Chandigarh University Technology Business Incubator
(72)**Name of Inventor :**
1)Shailendra Singh Rajput

(57) Abstract :
An automated insect collection device, comprising a housing 1 over a ground surface of an agricultural field via plurality of omnidirectional wheels 2 to provide translation to platform over the field, a display panel 3 to enable user to provide input regrading collection of specific insects from field, an imaging unit 4 determines presence of user-specified insects over plants, a motorized cylindrical shaft 5 via a pair of links 6, plurality of hard and soft flaps 7 via a motorized hinge joint 8 to deploy specific types of flaps 7 at a pre-defined angle, plurality of motorized rollers 10 wrapped with a string 11 that is connected with opposite the of frame 9 to modulate length of string 11 in order to regulate tension in the springs to allow the insects to hit the string 11 and fall into a chamber 12 arranged beneath the frame 9.

No. of Pages : 16 No. of Claims : 4

(12) PATENT APPLICATION PUBLICATION
(21) Application No.202411024932 A
(19) INDIA
(22) Date of filing of Application :27/03/2024
(43) Publication Date : 07/11/2025

(54) Title of the invention : DEVICE FOR STRAINING, RINSING, BOILING OR STEAMING OF FOOD ITEMS

(51) International classification	:A47J0043280000, A47J0027040000, G05B0015020000, A47J0027000000, A47J0027180000
(31) Priority Document No	:NA
(32) Priority Date	:NA
(33) Name of priority country	:NA
(86) International Application No	:NA
Filing Date	:NA
(87) International Publication No	: NA
(61) Patent of Addition to Application Number	:NA
Filing Date	:NA
(62) Divisional to Application Number	:NA
Filing Date	:NA

(71)**Name of Applicant :**
1)Chandigarh University
Address of Applicant :National Highway 95, Chandigarh-Ludhiana Highway, Mohali, Punjab 140413, India. Mohali Punjab India
2)Chandigarh University Technology Business Incubator
(72)**Name of Inventor :**
1)Kulwinder Singh

(57) Abstract :
A device for straining, rinsing, boiling or steaming of food items, comprising a circular frame 1 having a net structure made of plurality of interlinked telescopic rods 2 with hinge joints 3 for accommodating the food items in different quantities, a pair of handles 4 having a heatproof coating for a user to acquire a grip, a pair of L-shaped telescopic arm 5 lowering the food in the net structure into the utensil for a cooking process, plurality of telescopic bars 6 for resting on an end of the utensil to move the net structure to stir the food items, an artificial intelligence-based imaging unit 8 to scan for the quantity of the food items, a sensing module detects an odor from the food and a speaker 9 to generate an audio alert to the user regarding a removal of the food from heat.

No. of Pages : 16 No. of Claims : 5

(12) PATENT APPLICATION PUBLICATION
(21) Application No.202411024933 A
(19) INDIA
(22) Date of filing of Application :27/03/2024
(43) Publication Date : 07/11/2025

(54) Title of the invention : DEVICE FOR BUNDLING SUGARCANES

(51) International classification	:H04N0005770000, A22C0011120000, H02G0001020000, E04G0021120000, A22C0015000000	(71)**Name of Applicant :** **1)Chandigarh University** Address of Applicant :National Highway 95, Chandigarh-Ludhiana Highway, Mohali, Punjab 140413, India. Mohali Punjab India **2)Chandigarh University Technology Business Incubator**
(31) Priority Document No	:NA	(72)**Name of Inventor :**
(32) Priority Date	:NA	**1)Geetika Sukheja**
(33) Name of priority country	:NA	
(86) International Application No	:NA	
Filing Date	:NA	
(87) International Publication No	: NA	
(61) Patent of Addition to Application Number	:NA	
Filing Date	:NA	
(62) Divisional to Application Number	:NA	
Filing Date	:NA	

(57) Abstract :
A device for bundling sugarcanes, comprises of a rectangular base 1 having a storage container 2 for storing of sugarcanes, a vertical support member 3 having a circular frame 4 with an iris lid 5, an L-shaped telescopic arm 6 with a clamp for picking a predetermined number of sugarcanes, a roller 10 with a spool of a tying wire to tie the sugarcanes at multiple points, a clipper to hold open end of the wire, circular slider 9 for translating iris lid 5 to create loops of the wire, a grip and twist unit 11 provided on a telescopic rod for extending the grip and twist unit 11 to hold two sides of the wire to twist and tie them, cutting blade 14 for cuts wire, an artificial intelligence-based imaging unit 16 for recording and processing images in a vicinity of the base.

No. of Pages : 19 No. of Claims : 6

(12) PATENT APPLICATION PUBLICATION
(21) Application No.202411025404 A
(19) INDIA
(22) Date of filing of Application :28/03/2024
(43) Publication Date : 07/11/2025

(54) Title of the invention : ADAPTABLE EMULSION COATING DEVICE FOR METAL SHEETS

(51) International classification	:G06F0003041000, G06F0003010000, A61F0013470000, B62B0005000000, H04N0005232000
(31) Priority Document No	:NA
(32) Priority Date	:NA
(33) Name of priority country	:NA
(86) International Application No	:NA
Filing Date	:NA
(87) International Publication No	: NA
(61) Patent of Addition to Application Number	:NA
Filing Date	:NA
(62) Divisional to Application Number	:NA
Filing Date	:NA

(71)**Name of Applicant :**
1)Chandigarh University
Address of Applicant :National Highway 95, Chandigarh-Ludhiana Highway, Mohali, Punjab 140413, India. Mohali Punjab India
2)Chandigarh University Technology Business Incubator
(72)**Name of Inventor :**
1)Ranvijay Kumar

(57) Abstract :
An adaptable emulsion coating device for metal sheets, comprising a body 1 position on a fixed surface, a touch interactive display 3 panel for user input, an imaging unit 2 installed on body 1 to determine dimensions of sheet along with any groove pattern of sheet, plurality of castor wheels 8 arranged underneath body 1 to move body 1 towards evaluated edge, a tactile sensor is integrated on wheels 8 for monitoring hardness of sheet, a multi-sectioned chamber 4 arranged in body 1 for storing different emulsions, a pair of motorized rollers 6 are arranged underneath body 1 to rotate for spreading dispensed emulsion on sheet, multiple electronically controlled valves integrated with rollers 6 to dispense an amount of emulsion from chamber 4 on sheet, plurality of electronically controlled sprinklers 7 integrated on chamber 4 to dispense emulsion from chamber 4 onto sheet for coating emulsion on sheet.

No. of Pages : 15 No. of Claims : 4

(12) PATENT APPLICATION PUBLICATION
(21) Application No.202411025405 A
(19) INDIA
(22) Date of filing of Application :28/03/2024
(43) Publication Date : 07/11/2025

(54) Title of the invention : ADAPTABLE METAL RING RESIZING DEVICE

(51) International classification	:A61B0017000000, B23K0009133000, B29C0065360000, F16L0037091000, H05K0001180000	(71)**Name of Applicant :** **1)Chandigarh University** Address of Applicant :National Highway 95, Chandigarh-Ludhiana Highway, Mohali, Punjab 140413, India. Mohali Punjab India **2)Chandigarh University Technology Business Incubator**
(31) Priority Document No	:NA	(72)**Name of Inventor :**
(32) Priority Date	:NA	**1)Jasgurpreet Singh**
(33) Name of priority country	:NA	
(86) International Application No	:NA	
Filing Date	:NA	
(87) International Publication No	: NA	
(61) Patent of Addition to Application Number	:NA	
Filing Date	:NA	
(62) Divisional to Application Number	:NA	
Filing Date	:NA	

(57) Abstract :
An adaptable metal ring resizing device, comprising a body 1 developed to be positioned on a fixed surface, a display panel 2 installed on the body 1 for providing input commands, a vertical conical structure 3 arranged on the body 1 for inserting a metal ring, an imaging unit 4 installed on the body 1 to determine dimension of the ring, a flame torch 5 mounted on the platform for heating the ring, a robotic arm 6 installed on the body 1 to grip the ring, a pair of motorized rollers 7 arranged on the body 1 coiled with a looped sharp string for cutting the ring, a hydraulic actuator 8 integrated on the body 1 for applying a pushing force on the rings for compressing the ring and a welding torch 9 integrated on the body 1 to perform point to point welding on ends of the ring.

No. of Pages : 15 No. of Claims : 3

(12) PATENT APPLICATION PUBLICATION
(21) Application No.202411025406 A
(19) INDIA
(22) Date of filing of Application :28/03/2024
(43) Publication Date : 07/11/2025

(54) Title of the invention : REPAIRING ASSISTIVE DEVICE FOR WOODS

(51) International classification	:A61B0017150000, B27G0003000000, A61B0034200000, B27C0005020000, B65D0019310000	(71)**Name of Applicant :** **1)Chandigarh University** Address of Applicant :National Highway 95, Chandigarh-Ludhiana Highway, Mohali, Punjab 140413, India. Mohali Punjab India **2)Chandigarh University Technology Business Incubator**
(31) Priority Document No	:NA	(72)**Name of Inventor :**
(32) Priority Date	:NA	**1)Surender Kumar**
(33) Name of priority country	:NA	
(86) International Application No	:NA	
Filing Date	:NA	
(87) International Publication No	: NA	
(61) Patent of Addition to Application Number	:NA	
Filing Date	:NA	
(62) Divisional to Application Number	:NA	
Filing Date	:NA	

(57) Abstract :
A repairing assistive device for woods, comprising a body 1 developed to be positioned on a ground surface within an enclosure, an imaging unit 2 mounted on the body 1 evaluates a 3D (dimensional) mapping of the enclosure, a display panel 3 mapped on the body 1 for displaying the evaluated mapping, a primary robotic arm 4 installed on the body 1 installed with an electronic nozzle connected with a chamber 5 for placing the nozzle towards the crack for dispensing the adhesive solution in the crack, a telescopically operated gripper 6 installed on a slab attached with the body 1 for gripping a wooden block from a chamber 7 attached on the body 1, a motorized cutter 8 installed on the body 1 for cutting the block and a suction unit 9 installed on the body 1 for withdrawing wood dust generated during cutting of the block.

No. of Pages : 16 No. of Claims : 5

(12) PATENT APPLICATION PUBLICATION
(21) Application No.202411025407 A
(19) INDIA
(22) Date of filing of Application :28/03/2024
(43) Publication Date : 07/11/2025

(54) Title of the invention : BUBBLE FORMING DEVICE FOR PHOTOGRAPHY

(51) International classification	:A63H0033280000, A47K0005120000, G01M0003120000, C11D0017080000, C02F0001660000	(71)**Name of Applicant :** **1)Chandigarh University** Address of Applicant :National Highway 95, Chandigarh-Ludhiana Highway, Mohali, Punjab 140413, India. Mohali Punjab India **2)Chandigarh University Technology Business Incubator**
(31) Priority Document No	:NA	(72)**Name of Inventor :**
(32) Priority Date	:NA	**1)Vijay Gahlaut**
(33) Name of priority country	:NA	
(86) International Application No	:NA	
Filing Date	:NA	
(87) International Publication No	: NA	
(61) Patent of Addition to Application Number	:NA	
Filing Date	:NA	
(62) Divisional to Application Number	:NA	
Filing Date	:NA	

(57) Abstract :
A bubble forming device for photography, comprising a first and second circular platforms connected with a telescopically operated rod 10, positioned on a ground surface for accommodating at least two users, a touch enabled screen 3 for enabling user's to give input commands for forming bubble, an artificial intelligence-based imaging unit 4 detects height of users accordingly rod 10 extend for maintaining an optimum distance between platforms 1, 2, two chambers 5 stored with liquid soap and water, installed with first platform 1, an electronic valve 6 dispenses liquid soap solution and water in a circular cavity 7 to obtain soap solution, an inverted U-shaped telescopically operated frame 9 configured between platforms 1, 2 and a curved-shaped motorized slider translating a ring 11 towards second platform 2 for forming a bubble that is accommodated around users for photography.

No. of Pages : 15 No. of Claims : 5

(12) PATENT APPLICATION PUBLICATION
(21) Application No.202411025447 A
(19) INDIA
(22) Date of filing of Application :28/03/2024
(43) Publication Date : 07/11/2025

(54) Title of the invention : AUTOMATED PIPE CLAMP MANUFACTURING DEVICE

(51) International classification	:B23K0037020000, B23D0035000000, E21B0017020000, G01N0001040000, B25J0005000000
(31) Priority Document No	:NA
(32) Priority Date	:NA
(33) Name of priority country	:NA
(86) International Application No	:NA
Filing Date	:NA
(87) International Publication No	: NA
(61) Patent of Addition to Application Number	:NA
Filing Date	:NA
(62) Divisional to Application Number	:NA
Filing Date	:NA

(71)**Name of Applicant :**
1)Chandigarh University
Address of Applicant :National Highway 95, Chandigarh-Ludhiana Highway, Mohali, Punjab 140413, India. Mohali Punjab India
2)Chandigarh University Technology Business Incubator
(72)**Name of Inventor :**
1)Jayaram R

(57) Abstract :
An automated pipe clamp manufacturing device comprises a housing 1 positioned on a ground surface and arranged with a chamber 10 stored with multiple metallic sheets held within the chamber 10 via a pair of pneumatic pins 11, a touch enabled screen 5 to give input commands regarding dimensions of a pipe clamp to be manufactured, a conveyer 6 for translating and positioning the sheet on a platform 3 arranged in continuation to conveyer 6 , a laser-based cutting unit 12 via a two-axis lead screw arrangement 14 for cutting a strip of the metal of required dimension, an imaging unit 2 for detecting cutting of the sheet in the strip, a robotic arm 13 equipped with a drilling unit 8 for drilling roles at the first and second portion of the clamp and a speaker 9 for notifying the user to collect pipe clamp from the housing 1.

No. of Pages : 19 No. of Claims : 5

(12) PATENT APPLICATION PUBLICATION
(21) Application No.202411025448 A
(19) INDIA
(22) Date of filing of Application :28/03/2024
(43) Publication Date : 07/11/2025

(54) Title of the invention : AUTOMATED PIPE COLLARING DEVICE

(51) International classification	:G06F0003041000, G06Q0030020000, B65H0035000000, G06F0003044000, H03K0017960000
(31) Priority Document No	:NA
(32) Priority Date	:NA
(33) Name of priority country	:NA
(86) International Application No	:NA
Filing Date	:NA
(87) International Publication No	: NA
(61) Patent of Addition to Application Number	:NA
Filing Date	:NA
(62) Divisional to Application Number	:NA
Filing Date	:NA

(71)**Name of Applicant :**
1)Chandigarh University
Address of Applicant :National Highway 95, Chandigarh-Ludhiana Highway, Mohali, Punjab 140413, India. Mohali Punjab India
2)Chandigarh University Technology Business Incubator
(72)**Name of Inventor :**
1)Arabinda Meher

(57) Abstract :
An automated pipe collaring device comprises a platform 1 configured with a U-shaped member 3 accessed by a user to manually position a hollow pipe over the member 3, a touch interactive display panel 4 for user input, an ultrasonic sensor detects thickness of the pipe, plurality of motorized hinge joint integrated within the member 3 for closing the member 3, a telescopically operated pusher 5 configured on the platform 1 for inserting a cylindrical rod within the pipe, plurality of heating units produce an optimum amount of heat, a DC (Direct Current) motor for rotating the rod, an inverted U-shaped cutter 8 attached with each of plurality of telescopically operated bars 6 in contact with the pipe, a touch sensor installed on the cutter 8 for detecting placement of the cutter 8 on the pipe, and a touch sensor detects placement of the cutter 8 on the pipe.

No. of Pages : 18 No. of Claims : 4

(12) PATENT APPLICATION PUBLICATION
(21) Application No.202411025451 A
(19) INDIA
(22) Date of filing of Application :28/03/2024
(43) Publication Date : 07/11/2025

(54) Title of the invention : AUTOMATED PROPELLER REPAIRING DEVICE

(51) International classification	:B23P0006000000, B23K0026030000, E01C0023090000, B23K0009133000, F01D0005000000
(31) Priority Document No	:NA
(32) Priority Date	:NA
(33) Name of priority country	:NA
(86) International Application No	:NA
Filing Date	:NA
(87) International Publication No	: NA
(61) Patent of Addition to Application Number	:NA
Filing Date	:NA
(62) Divisional to Application Number	:NA
Filing Date	:NA

(71)**Name of Applicant :**
1)Chandigarh University
Address of Applicant :National Highway 95, Chandigarh-Ludhiana Highway, Mohali, Punjab 140413, India. Mohali Punjab India
2)Chandigarh University Technology Business Incubator
(72)**Name of Inventor :**
1)Jasgurpreet Singh

(57) Abstract :
An automated propeller repairing device, comprising a platform 1 developed to be positioned on a ground surface carved with a slot 2 for positioning a propeller which is to be repaired, a touch interactive display panel 3 for providing input regarding details of accommodated propeller, an artificial intelligence-based imaging unit 4 to determine dimensions of propeller, a sensing module for monitoring dimensions and angle of blades of propellers, pair of robotic arms 5 installed on platform to position accommodated part on distorted portion of blade a motorized first gripper 6 to position a welding torch 7 to joint of part with distorted portion, a metallic electrode 8 for welding, a motorized second gripper 9 to perform grinding at welded portion, a motorized third gripper 11 with a puppy dial 12 to inspect surface of repaired blades and a telescopically operated L-shaped bar 13 with a brush 14 to scrub blades.

No. of Pages : 16 No. of Claims : 4

(12) PATENT APPLICATION PUBLICATION
(21) Application No.202411025452 A
(19) INDIA
(22) Date of filing of Application :28/03/2024
(43) Publication Date : 07/11/2025

(54) Title of the invention : DEVICE FOR REPAIRING OF LAMPS OF A CAR

(51) International classification	:B08B0005020000, B29C0049480000, B29C0049560000, B24B0055060000, B60B0019000000	(71)**Name of Applicant :** **1)Chandigarh University** Address of Applicant :National Highway 95, Chandigarh-Ludhiana Highway, Mohali, Punjab 140413, India. Mohali Punjab India **2)Chandigarh University Technology Business Incubator**
(31) Priority Document No	:NA	(72)**Name of Inventor :**
(32) Priority Date	:NA	**1)Arabinda Meher**
(33) Name of priority country	:NA	
(86) International Application No	:NA	
Filing Date	:NA	
(87) International Publication No	: NA	
(61) Patent of Addition to Application Number	:NA	
Filing Date	:NA	
(62) Divisional to Application Number	:NA	
Filing Date	:NA	

(57) Abstract :
A device for repairing of lamps of a car, comprising a rectangular base 1 having telescopic rod 2 , motorized omni-directional wheel 4 for a movement of rectangular base 1 , plurality of fastener tool 8 s for fastening and unfastening a fastener on a lamp cover, a suction cup 9 for holding an unfastened lamp cover, a motorized polishing wheel 4 for polishing a surface, a blower unit 12 for blowing dust from lamp cover, a magnetic tray for holding fasteners, an artificial intelligence-based imaging unit 11 for detecting a presence of car, a sensor modulecomprises a dust sensor for detecting presence of dust on cover, blower unit 12 to blow dust off cover.

No. of Pages : 17 No. of Claims : 5

(12) PATENT APPLICATION PUBLICATION
(21) Application No.202411025408 A
(19) INDIA
(22) Date of filing of Application :28/03/2024
(43) Publication Date : 07/11/2025

(54) Title of the invention : SHORT CIRCUIT PREVENTING DEVICE FOR HIGH VOLTAGE OVERHEAD ELECTRICAL WIRES

(51) International classification	:H02G7/00, H02G7/12, G05B19/02	
(31) Priority Document No	:NA	
(32) Priority Date	:NA	
(33) Name of priority country	:NA	
(86) International Application No	:NA	
Filing Date	:NA	
(87) International Publication No	: NA	
(61) Patent of Addition to Application Number	:NA	
Filing Date	:NA	
(62) Divisional to Application Number	:NA	
Filing Date	:NA	

(71)**Name of Applicant :**
1)Chandigarh University
Address of Applicant :National Highway 95, Chandigarh-Ludhiana Highway, Mohali, Punjab 140413, India. Mohali Punjab India
2)Chandigarh University Technology Business Incubator
(72)**Name of Inventor :**
1)Vivek Sharma

(57) Abstract :
A short circuit preventing device for high voltage overhead electrical wires, comprising a rectangular frame 1 developed to be positioned between multiple high voltage overhead electrical wires, an artificial intelligence-based imaging unit 2 mounted on the frame 1 for detecting exact location of the wire, plurality of C-shaped motorized expandable clamps 3 installed with the frame 1 for gripping the wires in a secured manner to prevent any chances of short circuit due to contact between the wires and a motorized omnidirectional wheel 4 configured with each of the clamps 3 to maneuver the frame 1 in a suitable direction to prevent the motion of the wires.

No. of Pages : 15 No. of Claims : 6

(12) PATENT APPLICATION PUBLICATION
(21) Application No.202411025409 A
(19) INDIA
(22) Date of filing of Application :28/03/2024
(43) Publication Date : 07/11/2025

(54) Title of the invention : ADAPTABLE POLYMER-FABRIC PASTING ASSISTIVE DEVICE

(51) International classification	:B65H 29/66, B65H 7/12, B65H 5/24, B65H 11/00	(71)**Name of Applicant :** **1)Chandigarh University** Address of Applicant :National Highway 95, Chandigarh-Ludhiana Highway, Mohali, Punjab 140413, India. Mohali Punjab India **2)Chandigarh University Technology Business Incubator** (72)**Name of Inventor :** **1)Nishant Ranjan**
(31) Priority Document No	:NA	
(32) Priority Date	:NA	
(33) Name of priority country	:NA	
(86) International Application No	:NA	
Filing Date	:NA	
(87) International Publication No	: NA	
(61) Patent of Addition to Application Number	:NA	
Filing Date	:NA	
(62) Divisional to Application Number	:NA	
Filing Date	:NA	

(57) Abstract :
An adaptable polymer-fabric pasting assistive device comprises a body 1 developed to be positioned on a ground surface, multiple suction cups 2 for securing the body 1 on surface, a rectangular plate 3 for enabling a user to accommodate a pair of polymer sheets, an artificial intelligence-based imaging unit 4 to determine position of ends of accommodated sheets, a pair of robotic clippers 5 slot to acquire grip of ends of sheets, an inverted U-shaped member 6 by means of a L-shaped telescopically operated rod 7 to extend/retract for positioning the member 6 in proximity to the overlapped sheets, a bar 8 by means of a hydraulic actuator for positioning bar 8 over overlapped sheets, a heating coil 9 for providing a pre-fed amount of heat, multiple motorized rollers 10 to rotate for translating sheet towards user and a temperature sensor for monitoring temperature of heat experienced on sheets.

No. of Pages : 14 No. of Claims : 4

(12) PATENT APPLICATION PUBLICATION
(21) Application No.202411025410 A
(19) INDIA
(22) Date of filing of Application :28/03/2024
(43) Publication Date : 07/11/2025

(54) Title of the invention : AUTOMATED LINK CHAIN MANUFACTURING DEVICE

(51) International classification	:F24F0013060000, H04L0067020000, E06B0009322000, B25J0018020000, A44C0011000000	(71)**Name of Applicant :** **1)Chandigarh University** Address of Applicant :National Highway 95, Chandigarh-Ludhiana Highway, Mohali, Punjab 140413, India. Mohali Punjab India **2)Chandigarh University Technology Business Incubator**
(31) Priority Document No	:NA	(72)**Name of Inventor :**
(32) Priority Date	:NA	**1)Sanjeet Singh**
(33) Name of priority country	:NA	
(86) International Application No	:NA	
Filing Date	:NA	
(87) International Publication No	: NA	
(61) Patent of Addition to Application Number	:NA	
Filing Date	:NA	
(62) Divisional to Application Number	:NA	
Filing Date	:NA	

(57) Abstract :
An automated link chain manufacturing device, comprising a housing 1 positioned on a ground surface and attached with spool 11 wrapped with a thick metal wire, a touch enabled screen 2 accessed by a user to give input commands regarding length of link chain to be manufactured, a telescopically operated gripper 3 gradually uncoils wire, an RPM sensor detecting length of wire unwrapped, a motorized cutter 4 cuts unwrapped wire and collected on a platform 1, a pair of elongated members 5 configured with a pair of protrusions 6 and a pair of motorized hinges 7 moulding forming first link for chain, a robotic arm 8 accommodating metal pieces between protrusions 6 in a successive manner and simultaneously hinges 7 rotates members 5 towards each other for making other links of chain in successive manner.

No. of Pages : 16 No. of Claims : 5

(12) PATENT APPLICATION PUBLICATION
(21) Application No.202411025411 A
(19) INDIA
(22) Date of filing of Application :28/03/2024
(43) Publication Date : 07/11/2025

(54) Title of the invention : AUTOMATED FIELD JOINT PROTECTING DEVICE FOR PIPELINES

(51) International classification	:F16L0058180000, F16L0059200000, B29L0023000000, B25J0011000000, G05D0001020000	(71)**Name of Applicant :** **1)Chandigarh University** Address of Applicant :National Highway 95, Chandigarh-Ludhiana Highway, Mohali, Punjab 140413, India. Mohali Punjab India **2)Chandigarh University Technology Business Incubator**
(31) Priority Document No	:NA	(72)**Name of Inventor :**
(32) Priority Date	:NA	**1)Kulwinder Singh**
(33) Name of priority country	:NA	
(86) International Application No	:NA	
Filing Date	:NA	
(87) International Publication No	: NA	
(61) Patent of Addition to Application Number	:NA	
Filing Date	:NA	
(62) Divisional to Application Number	:NA	
Filing Date	:NA	

(57) Abstract :
An automated field joint protecting device for pipelines, comprises a body 1 developed to be positioned on a ground surface, plurality of motorized wheels 2 for providing movement to the body 1 on the surface, an artificial intelligence-based imaging unit 3 to evaluate a 3D mapping of the surrounding as well as determine presence of interim pipeline, a touch interactive display panel 4 for displaying the evaluated mapping and also enabling the user to select a portion of the pipeline where the user desires to apply a protective layer of coating, a LiDAR (Light Detection and Ranging) sensor detecting exact location and dimensions of field joint present on the pipeline, an electronically controlled nozzle 5 for spraying epoxy solution over the detected field joint, and a ball and socket joint 8 for providing multi-axis rotational motion to the robotic arm 6.

No. of Pages : 16 No. of Claims : 6

(12) PATENT APPLICATION PUBLICATION
(21) Application No.202411025453 A
(19) INDIA
(22) Date of filing of Application :28/03/2024
(43) Publication Date : 07/11/2025

(54) Title of the invention : DEVICE FOR PULLING OF A BEARING

(51) International classification	:G06F0003160000, G10L0015220000, H04R0003000000, H04W0004020000, B25J0019020000	(71)**Name of Applicant :** **1)Chandigarh University** Address of Applicant :National Highway 95, Chandigarh-Ludhiana Highway, Mohali, Punjab 140413, India. Mohali Punjab India **2)Chandigarh University Technology Business Incubator**
(31) Priority Document No	:NA	(72)**Name of Inventor :**
(32) Priority Date	:NA	**1)Jyoti Taunk**
(33) Name of priority country	:NA	
(86) International Application No	:NA	
Filing Date	:NA	
(87) International Publication No	: NA	
(61) Patent of Addition to Application Number	:NA	
Filing Date	:NA	
(62) Divisional to Application Number	:NA	
Filing Date	:NA	

(57) Abstract :
A device for pulling of a bearing, comprises of a puller rod 1 having a plurality of teeth 2, a rectangular base 11 for accommodating all the components, a slider 3 for providing sliding to puller rod 1, telescopic legs 4 having a motorized omnidirectional wheel 5 for movement of the base 11, a brake shoe for prevent a movement of the base 11, artificial intelligence-based imaging unit 9 for capturing and processing multiple images in vicinity of the base 11, a robotic arm 8 for accommodating spray nozzle 7, a spray nozzle 7 to spray a lubricant to facilitate removal of the bearing, a speaker 10 to generate an audio alert regarding the corroded bearing, a microphone for receiving audio commands from an user.

No. of Pages : 16 No. of Claims : 5

(12) PATENT APPLICATION PUBLICATION
(19) INDIA
(22) Date of filing of Application :28/03/2024
(21) Application No.202411025455 A
(43) Publication Date : 07/11/2025

(54) Title of the invention : ADAPTABLE RAISED PERFORATED SHEET MANUFACTURING ASSISTIVE DEVICE

(51) International classification	:B61B0001020000, G06F0003010000, H01L0021670000, B25J0009160000, H04N0007180000
(31) Priority Document No	:NA
(32) Priority Date	:NA
(33) Name of priority country	:NA
(86) International Application No	:NA
Filing Date	:NA
(87) International Publication No	: NA
(61) Patent of Addition to Application Number	:NA
Filing Date	:NA
(62) Divisional to Application Number	:NA
Filing Date	:NA

(71)**Name of Applicant :**
1)Chandigarh University
Address of Applicant :National Highway 95, Chandigarh-Ludhiana Highway, Mohali, Punjab 140413, India. Mohali Punjab India
2)Chandigarh University Technology Business Incubator
(72)**Name of Inventor :**
1)Sanjeet Singh

(57) Abstract :
An adaptable raised perforated sheet manufacturing assistive device, comprising a platform 1 developed to be positioned on a fixed surface, plurality of suction cups 7 are arranged underneath platform 1 to affixed the platform 1, a display panel 3 installed on platform 1 for user input, an imaging unit 2 installed on platform 1 to determine dimensions of sheet, a cutter 6 integrated on platform 1 to cut metallic sheets, a roller 5 arranged on platform 1 by means of a robotic link to rotate for straightening sheets, a robotic arm 4 installed on platform 1 for positioning sheet on a motorized sliding unit 8, a circular disc 10 having punching bits for punching a user-specified cavity in sheet, a two-axis motorized sliding unit 8 integrated in between ceiling portion and pole for translating punching unit at evaluated distances.

No. of Pages : 19 No. of Claims : 5

(12) PATENT APPLICATION PUBLICATION
(19) INDIA
(22) Date of filing of Application :28/03/2024
(21) Application No.202411025456 A
(43) Publication Date : 07/11/2025

(54) Title of the invention : WEARABLE HAIR EDGES TRIMMING DEVICE

(51) International classification	:G06F0003010000, G06F0003160000, B65G0023080000, G07C0009000000, A63C0017120000	(71)**Name of Applicant :** **1)Chandigarh University** Address of Applicant :National Highway 95, Chandigarh-Ludhiana Highway, Mohali, Punjab 140413, India. Mohali Punjab India **2)Chandigarh University Technology Business Incubator**
(31) Priority Document No	:NA	(72)**Name of Inventor :**
(32) Priority Date	:NA	**1)Nishant Ranjan**
(33) Name of priority country	:NA	
(86) International Application No	:NA	
Filing Date	:NA	
(87) International Publication No	: NA	
(61) Patent of Addition to Application Number	:NA	
Filing Date	:NA	
(62) Divisional to Application Number	:NA	
Filing Date	:NA	

(57) Abstract :
A wearable hair edges trimming device, comprising a wearable body 1 developed to be positioned on a parietal ridge of a user's head portion, an artificial intelligence 2 enabled image capturing module to evaluate dimension of user's head, a motorized roller 7 is coiled with a rubberized strap 8 that is being uncoiled upon rotation of said roller 7, a motorized scissor 4 configured on a motorized primary slider 3 laid on body 1 to simultaneously translate and cut down exceeded part of hair, a secondary motorized slider sandwiched in between plate 6 and frame for providing a vertical movement to body 1, electromagnetic locks 5 for locking strap 8 with one another.

No. of Pages : 14 No. of Claims : 4

(12) PATENT APPLICATION PUBLICATION
(21) Application No.202411025457 A
(19) INDIA
(22) Date of filing of Application :28/03/2024
(43) Publication Date : 07/11/2025

(54) Title of the invention : CEILING DESIGNING DEVICE

(51) International classification	:G06F0003035400, B60R0011000000, G06F0003042000, G06F0003048800, A61B0001060000
(31) Priority Document No	:NA
(32) Priority Date	:NA
(33) Name of priority country	:NA
(86) International Application No	:NA
Filing Date	:NA
(87) International Publication No	: NA
(61) Patent of Addition to Application Number	:NA
Filing Date	:NA
(62) Divisional to Application Number	:NA
Filing Date	:NA

(71)**Name of Applicant :**
1)Chandigarh University
Address of Applicant :National Highway 95, Chandigarh-Ludhiana Highway, Mohali, Punjab 140413, India. Mohali Punjab India
2)Chandigarh University Technology Business Incubator
(72)**Name of Inventor :**
1)Sandeep Singh

(57) Abstract :
A ceiling designing device, comprises a frame 1 comprising a telescopically operated rod 2 that extends and retracts to make deign over the ceiling, a suction cup 3 adheres the frame 1 with the floor, an image capturing module 4 captures images of ceiling, motorized hinge joints aids in providing flexibility to the plates 5, a touch interactive display panel 6 accessed by user to provide inputs, a storage chamber 7 stores multiple color liquid, a nozzle 8 dispenses the colors, moisture sensors determining presence of moisture on the ceiling, a LDR detects the ambient light conditions inside the enclosure, multiple LED lights lightens up to increase the visibility, an air blower 10 dries the colored design.

No. of Pages : 17 No. of Claims : 5

(12) PATENT APPLICATION PUBLICATION

(21) Application No.202411025458 A

(19) INDIA

(22) Date of filing of Application :28/03/2024

(43) Publication Date : 07/11/2025

(54) Title of the invention : PIPELINE SECURING ASSISTIVE DEVICE

(51) International classification	:B25J0005000000, B25J0009000000, B05C0017005000, B25J0005020000, B65G0023080000
(31) Priority Document No	:NA
(32) Priority Date	:NA
(33) Name of priority country	:NA
(86) International Application No	:NA
Filing Date	:NA
(87) International Publication No	: NA
(61) Patent of Addition to Application Number	:NA
Filing Date	:NA
(62) Divisional to Application Number	:NA
Filing Date	:NA

(71)**Name of Applicant :**

1)Chandigarh University

Address of Applicant :National Highway 95, Chandigarh-Ludhiana Highway, Mohali, Punjab 140413, India. Mohali Punjab India

2)Chandigarh University Technology Business Incubator

(72)**Name of Inventor :**

1)Dr. Aditya Kumar Tiwary

(57) Abstract :

A pipeline securing assistive device, comprising a rectangular platform 1 positioned on a ground surface near a pipeline, multiple motorized omnidirectional wheels 2 move platform 1 on surface, an artificial intelligence-based imaging unit 3 evaluates a 3D (three-dimensional) mapping and displayed on a touch interactive display panel 4 for enabling user to select a portion of surface where pipes needs, a pair of L-shaped telescopic rods 5 positions a motorized roller 6 for unwinding sheet from roller 6, a first robotic arm 7 via an electric glue gun 8 pours adhesive liquid on pipe, two robotic grippers 9 positions sheet over pipe to position sheet over pipe, two second robotic arms 10 position nails on edges of sheet, a hammering unit providing thumping movement on positioned nails to insert nails at edges, two third robotic arm 12 via a motorized cutter 13, trims extra sheet.

No. of Pages : 17 No. of Claims : 4

(12) PATENT APPLICATION PUBLICATION
(21) Application No.202411025412 A
(19) INDIA
(22) Date of filing of Application :28/03/2024
(43) Publication Date : 07/11/2025

(54) Title of the invention : AUTOMATED AND SAFE DELIVERY PARCELS ACCOMMODATION DEVICE

(51) International classification	:G06F0003041000, G06F0003160000, G07F0007080000, A47G0029140000, G16H0020170000	(71)**Name of Applicant :** **1)Chandigarh University** Address of Applicant :National Highway 95, Chandigarh-Ludhiana Highway, Mohali, Punjab 140413, India. Mohali Punjab India **2)Chandigarh University Technology Business Incubator**
(31) Priority Document No	:NA	(72)**Name of Inventor :**
(32) Priority Date	:NA	**1)Meenakshi Verma**
(33) Name of priority country	:NA	
(86) International Application No	:NA	
Filing Date	:NA	
(87) International Publication No	: NA	
(61) Patent of Addition to Application Number	:NA	
Filing Date	:NA	
(62) Divisional to Application Number	:NA	
Filing Date	:NA	

(57) Abstract :
An automated and safe delivery parcels accommodation device comprises of a body 1 positioned on a ground surface in proximity to front door of a house, a touch interactive display panel 2 arranged with the body 1 for providing input regarding details required by the individual prior accommodating parcels within the body 1, a speaker is integrated on the body 1 to produce audio notification for the user to guide the individual regarding set of information required from side of the individual, an artificial intelligence-based imaging unit 3 installed on the body 1 to determine facial features of the user, a user-interface installed in a computing unit for allowing the user to initiate opening of a motorized lid 4 configured on top portion of the body 1 to open for allowing the individual to accommodate parcel inside the body 1.

No. of Pages : 15 No. of Claims : 3

(12) PATENT APPLICATION PUBLICATION
(21) Application No.202411025413 A
(19) INDIA
(22) Date of filing of Application :28/03/2024
(43) Publication Date : 07/11/2025

(54) Title of the invention : FILM APPLICATION DEVICE FOR WINDOWS

(51) International classification	:G06F0003160000, G10L0015220000, H01L0029423000, G06F0009451000, B65H0035000000	(71)**Name of Applicant :** **1)Chandigarh University** Address of Applicant :National Highway 95, Chandigarh-Ludhiana Highway, Mohali, Punjab 140413, India. Mohali Punjab India **2)Chandigarh University Technology Business Incubator**
(31) Priority Document No	:NA	(72)**Name of Inventor :**
(32) Priority Date	:NA	**1)Anjali Verma**
(33) Name of priority country	:NA	
(86) International Application No	:NA	
Filing Date	:NA	
(87) International Publication No	: NA	
(61) Patent of Addition to Application Number	:NA	
Filing Date	:NA	
(62) Divisional to Application Number	:NA	
Filing Date	:NA	

(57) Abstract :
A film application device for windows, comprises of a C-shaped hollow frame 1 having a handle 2, film roller 3 for applying on the window, pair of motorized wheels 4 for application of the film, smaller tape roller 5 to adhere the tape with an edge of the film, a telescopic arm 6 for extending/retracting clutch 7, the clutch 7 for gripping the edge of the film, an artificial intelligence-based imaging unit 8 for recording and processing images in a vicinity of the frame 1, a cutting blade 9 to cut the applied film from the spool, a hinge joint 10 to bring the blade 9 in contact with the film, a speaker unit 11 to notifying the user regarding moving the frame 1 to a next column, a microphone for receiving audio commands from the user.

No. of Pages : 19 No. of Claims : 5

(12) PATENT APPLICATION PUBLICATION
(21) Application No.202411025416 A
(19) INDIA
(22) Date of filing of Application :28/03/2024
(43) Publication Date : 07/11/2025

(54) Title of the invention : AUTOMATED WIRE MESH MANUFACTURING DEVICE

(51) International classification	:G01N0021650000, G01N0001020000, B33Y0030000000, G01B0011250000, B65G0023080000	(71)**Name of Applicant :** **1)Chandigarh University** Address of Applicant :National Highway 95, Chandigarh-Ludhiana Highway, Mohali, Punjab 140413, India. Mohali Punjab India **2)Chandigarh University Technology Business Incubator**
(31) Priority Document No	:NA	(72)**Name of Inventor :**
(32) Priority Date	:NA	**1)Vinay Kumar**
(33) Name of priority country	:NA	
(86) International Application No	:NA	
Filing Date	:NA	
(87) International Publication No	: NA	
(61) Patent of Addition to Application Number	:NA	
Filing Date	:NA	
(62) Divisional to Application Number	:NA	
Filing Date	:NA	

(57) Abstract :
An automated wire mesh manufacturing device, comprising a platform 1 developed to be positioned on a ground surface, an imaging unit 2 installed on platform 1 to detect dimensions of wires, a motorized sliding unit configured in between slot and clippers 4 for translating clippers 4, a chamber 6 assembled on platform 1 for storing a roll of filler material, a motorized roller assembled inside chamber 6 for rotating on its axis to unwind filler, a conduit 7 connected with chamber 6 for supplying filler towards a hand-held, a hand-held unit is gripped by a robotic arm 9 configured on platform 1 for positioning hand-held unit on junction foe connecting junction by welding, a power supply unit 5 assembled on platform 1 for supplying power supply to hand-held unit to heat the filler, an electronic nozzle 3 attached mapped on platform 1 for dispensing gas towards junction.

No. of Pages : 16 No. of Claims : 4

(12) PATENT APPLICATION PUBLICATION
(21) Application No.202411025417 A
(19) INDIA
(22) Date of filing of Application :28/03/2024
(43) Publication Date : 07/11/2025

(54) Title of the invention : AUTOMATED SAFETY SYSTEM FOR AUTOMOTIVE VEHICLE BATTERY

(51) International classification	:H04N0013239000, C09D0005080000, G01N0017040000, G01N0017000000, B05B0012120000
(31) Priority Document No	:NA
(32) Priority Date	:NA
(33) Name of priority country	:NA
(86) International Application No	:NA
Filing Date	:NA
(87) International Publication No	: NA
(61) Patent of Addition to Application Number	:NA
Filing Date	:NA
(62) Divisional to Application Number	:NA
Filing Date	:NA

(71)**Name of Applicant :**
1)Chandigarh University
Address of Applicant :National Highway 95, Chandigarh-Ludhiana Highway, Mohali, Punjab 140413, India. Mohali Punjab India
2)Chandigarh University Technology Business Incubator
(72)**Name of Inventor :**
1)Manish Kumar Pandey

(57) Abstract :
An automated safety system for automotive vehicle battery comprises of a pair of V-shaped plates 1 associated with the system and installed with an automotive vehicle battery, a RTC (Real Time Clock) module integrated with a controller for determining time duration, a motorized pivot joint 4 integrated at convergence point of the plates to adjust orientation and position of the plates, an artificial intelligence-based imaging unit 5 installed on the plate for capturing and processing multiple images in vicinity to the plates, a robotic arm 6 installed on the plates and attached with a motorized scrubbing unit 7 for scrubbing the detected portion, a corrosion detection sensor integrated on the plate for detecting presence of rust over electrodes, am anti-rust solution is arranged on the frame integrated with an electronically controlled nozzle 9 to spray the solution onto the electrodes.

No. of Pages : 16 No. of Claims : 5

(12) PATENT APPLICATION PUBLICATION
(21) Application No.202411025418 A
(19) INDIA
(22) Date of filing of Application :28/03/2024
(43) Publication Date : 07/11/2025

(54) Title of the invention : AUTOMATED LACTODERM PROCESSING DEVICE

(51) International classification	:G01N0033040000, B65D0047200000, A01J0005010000, B65D0025080000, A47J0027140000	(71)**Name of Applicant :** **1)Chandigarh University** Address of Applicant :National Highway 95, Chandigarh-Ludhiana Highway, Mohali, Punjab 140413, India. Mohali Punjab India **2)Chandigarh University Technology Business Incubator**
(31) Priority Document No	:NA	(72)**Name of Inventor :**
(32) Priority Date	:NA	**1)Jayaram R**
(33) Name of priority country	:NA	
(86) International Application No	:NA	
Filing Date	:NA	
(87) International Publication No	: NA	
(61) Patent of Addition to Application Number	:NA	
Filing Date	:NA	
(62) Divisional to Application Number	:NA	
Filing Date	:NA	

(57) Abstract :
An automated lactoderm processing device, comprises of, a housing 1 positioned on a ground surface and installed with a chamber 7 stored with milk, a touch enabled screen 2 to give input commands regarding an amount of lactoderm and different ingredients, an electronic valve 13 to open for dispensing determined amount of the milk in a hemispherical container 10, a heating unit to heat the container 10 to boil the milk, an imaging unit 6 for detecting presence of a lactoderm on the top surface of milk, a motorized clipper 11 for gripping lactoderm, a motorized slider 12 for translating and aligning the clipper 11 over a vessel 3, a motorized stirrer 5 for mixing the lactoderm with the ingredient, and a speaker 9 for notifying the user to collect the processed lactoderm.

No. of Pages : 19 No. of Claims : 7

(12) PATENT APPLICATION PUBLICATION
(21) Application No.202411025419 A
(19) INDIA
(22) Date of filing of Application :28/03/2024
(43) Publication Date : 07/11/2025

(54) Title of the invention : AUTOMATED TIN SHEET MAINTENANCE DEVICE

(51) International classification	:E06B0009322000, B21D0001060000, G06F0003044000, G06F0003041000, E02F0009220000
(31) Priority Document No	:NA
(32) Priority Date	:NA
(33) Name of priority country	:NA
(86) International Application No	:NA
Filing Date	:NA
(87) International Publication No	: NA
(61) Patent of Addition to Application Number	:NA
Filing Date	:NA
(62) Divisional to Application Number	:NA
Filing Date	:NA

(71)**Name of Applicant :**
1)Chandigarh University
Address of Applicant :National Highway 95, Chandigarh-Ludhiana Highway, Mohali, Punjab 140413, India. Mohali Punjab India
2)Chandigarh University Technology Business Incubator
(72)**Name of Inventor :**
1)Nishant Ranjan

(57) Abstract :
An automated tin sheet maintenance device comprises of, a housing 1 positioned on a tin sheet, a touch enabled screen 2 is installed on the housing 1 for enabling a user to give input commands for carrying out maintenance of the sheet, an artificial intelligence-based imaging unit 3 mounted on the housing 1 for detecting cracks and dents on the sheet, a telescopically operated gripper 4 installed on the housing 1 for unwrapping a suitable length of a tape from a spool that is installed on the housing 1, a motorized blade installed in proximity to the spool for cutting the unwrapped tape, an L-shaped telescopically operated pusher 5 installed on the housing 1 for applying a force to eliminate the dent, a circular disc 6 configured with the platform via an L-shaped telescopically operated rod 7.

No. of Pages : 18 No. of Claims : 7

(12) PATENT APPLICATION PUBLICATION
(21) Application No.202411025420 A
(19) INDIA
(22) Date of filing of Application :28/03/2024
(43) Publication Date : 07/11/2025

(54) Title of the invention : AUTOMATED SHUTTER RAIL CLEANING ASSISTIVE DEVICE

(51) International classification	:B08B0001000000, B08B0001040000, G08B0017100000, G08B0021240000, E01H0008100000
(31) Priority Document No	:NA
(32) Priority Date	:NA
(33) Name of priority country	:NA
(86) International Application No	:NA
Filing Date	:NA
(87) International Publication No	: NA
(61) Patent of Addition to Application Number	:NA
Filing Date	:NA
(62) Divisional to Application Number	:NA
Filing Date	:NA

(71)**Name of Applicant :**
1)Chandigarh University
Address of Applicant :National Highway 95, Chandigarh-Ludhiana Highway, Mohali, Punjab 140413, India. Mohali Punjab India
2)Chandigarh University Technology Business Incubator
(72)**Name of Inventor :**
1)Lochan Sharma

(57) Abstract :
An automated shutter rail cleaning assistive device comprises a body 1 with plurality of wheels 2 for moving the body 1, an artificial intelligence-based imaging unit 3 to determine positioning of sliding rails of a shutter gate, a dust sensor for monitoring presence of dust/dirt deposited on the rails, an ultrasonic sensor for monitoring distance of the body 1 from the rails, a motorized gripper 4 for positioning a cleaning brush 5 with plurality of electronically controlled valves 6 to dispense a cleaning solution stored in a chamber on the rails and suction units to extract scrubbed off dirt from rails and store in a container, a motorized ball and socket joint 7 to provide angular movement to brush 5 against rails¸ an angle sensor for monitoring alignment of rails and a computing unit 8 to generate an alert notification regarding detected misalignment.

No. of Pages : 15 No. of Claims : 4

(12) PATENT APPLICATION PUBLICATION
(21) Application No.202411025421 A
(19) INDIA
(22) Date of filing of Application :28/03/2024
(43) Publication Date : 07/11/2025

(54) Title of the invention : OBJECT SECURING DEVICE FOR HEAVY VEHICLE

(51) International classification	:G03H0001220000, F16M0013020000, G07C0005000000, G03H0001020000, F16B0047000000	(71)**Name of Applicant :** **1)Chandigarh University** Address of Applicant :National Highway 95, Chandigarh-Ludhiana Highway, Mohali, Punjab 140413, India. Mohali Punjab India **2)Chandigarh University Technology Business Incubator**
(31) Priority Document No	:NA	(72)**Name of Inventor :**
(32) Priority Date	:NA	**1)Kulwinder Singh**
(33) Name of priority country	:NA	
(86) International Application No	:NA	
Filing Date	:NA	
(87) International Publication No	: NA	
(61) Patent of Addition to Application Number	:NA	
Filing Date	:NA	
(62) Divisional to Application Number	:NA	
Filing Date	:NA	

(57) Abstract :
An object securing device for heavy vehicle, comprising rectangular frame 1 attached with multiple horizontal rods 2 developed to be mapped within carrier portion of heavy vehicle and developed to accommodate multiple objects to be transported, an artificial intelligence-based imaging unit 3 mounted on frame 1 to detect number and dimensions of objects, holographic projection unit 4 mounted on frame 1 for projecting holograms to guide user in accurately positioning objects at suitable position within frame 1, multiple motorized sliders 5 attached between frame 1 and rods 2 for translating rods 2 towards/away from each other for securing objects between rods 2, multiple L-shaped links 6 each attached with suction cup 7 attached with each of rods 2 via a motorized sliding unit for translating the links 6 in a manner to grip objects via suction cups 7 thus preventing undesired motion of objects during transportation of objects through vehicle.

No. of Pages : 15 No. of Claims : 4

(12) PATENT APPLICATION PUBLICATION
(21) Application No.202411025422 A
(19) INDIA
(22) Date of filing of Application :28/03/2024
(43) Publication Date : 07/11/2025

(54) Title of the invention : ADAPTABLE SLEEVE INSTALLATION ASSISTIVE DEVICE

(51) International classification	:H01L0051000000, B61B0001020000, G01N0033543000, H05B0006100000, H04N0005225000
(31) Priority Document No	:NA
(32) Priority Date	:NA
(33) Name of priority country	:NA
(86) International Application No	:NA
Filing Date	:NA
(87) International Publication No	: NA
(61) Patent of Addition to Application Number	:NA
Filing Date	:NA
(62) Divisional to Application Number	:NA
Filing Date	:NA

(71)**Name of Applicant :**
1)Chandigarh University
Address of Applicant :National Highway 95, Chandigarh-Ludhiana Highway, Mohali, Punjab 140413, India. Mohali Punjab India
2)Chandigarh University Technology Business Incubator
(72)**Name of Inventor :**
1)Amit Verma

(57) Abstract :
An adaptable sleeve installation assistive device comprises of a frame fabricated with a handle 1 to positon the frame in proximity to a pipe, an artificial intelligence-based imaging unit 2 installed on the platform for capturing and processing multiple images in vicinity of the frame, a hydraulically operated rod 3 integrated in the frame to extend/retract for getting positioned in proximity to the pipe, a drawer arrangement 5 is integrated in the member to increase/decrease the dimensions of the member, a laser projection unit 8 integrated in the frame to project light beams on the sleeve, a motorized hinge joint integrated with each of the members to provide converging/diverging movement to the members, a motorized sliding unit 7 integrated in between the clamps 6 to translate the clamps 6 for providing a twisting movement.

No. of Pages : 16 No. of Claims : 4

(12) PATENT APPLICATION PUBLICATION
(21) Application No.202411025423 A
(19) INDIA
(22) Date of filing of Application :28/03/2024
(43) Publication Date : 07/11/2025

(54) Title of the invention : AUTOMATED KITCHEN CHIMNEY CLEANING DEVICE

(51) International classification	:G06F0003010000, B61B0001020000, E01F0001000000, F02K0001120000, B41J0002165000
(31) Priority Document No	:NA
(32) Priority Date	:NA
(33) Name of priority country	:NA
(86) International Application No	:NA
Filing Date	:NA
(87) International Publication No	: NA
(61) Patent of Addition to Application Number	:NA
Filing Date	:NA
(62) Divisional to Application Number	:NA
Filing Date	:NA

(71)**Name of Applicant :**
1)Chandigarh University
Address of Applicant :National Highway 95, Chandigarh-Ludhiana Highway, Mohali, Punjab 140413, India. Mohali Punjab India
2)Chandigarh University Technology Business Incubator
(72)**Name of Inventor :**
1)Srijit Biswas

(57) Abstract :
An automated kitchen chimney cleaning device, comprising a platform 1 positioned on a ground surface, a touch enabled screen 4 is installed on platform 1 for user input, an imaging unit 3 is configured on platform 1 to detect exact location and height of chimney from ground surface, a wheels 2 configured underneath platform 1 for positioning platform 1 vertically underneath chimney, a hydraulic bar 6 arranged in between platform 1 and plate 5 for positioning plate 5 near to chimney, plurality of flaps 7 arranged over platform 1 each via a motorized hinge joint to create a protective shield around chimney, plurality of suction units configured on vertices of flap for affixing flaps 7 with chimney, plurality of electronic nozzles 9 installed on plate 5 for dispensing cleaning solution on chimney, plurality of electronic valves 8 installed at ide walls of flaps 7 for dispensing water on chimney.

No. of Pages : 19 No. of Claims : 5

(12) PATENT APPLICATION PUBLICATION
(19) INDIA
(22) Date of filing of Application :28/03/2024
(21) Application No.202411025424 A
(43) Publication Date : 07/11/2025

(54) Title of the invention : AUTOMATED CHIMNEY CLEANING DEVICE

(51) International classification	:G06F0003010000, A47L0011400000, G06F0021600000, A47K0007020000, G10L0013000000
(31) Priority Document No	:NA
(32) Priority Date	:NA
(33) Name of priority country	:NA
(86) International Application No	:NA
Filing Date	:NA
(87) International Publication No	: NA
(61) Patent of Addition to Application Number	:NA
Filing Date	:NA
(62) Divisional to Application Number	:NA
Filing Date	:NA

(71)**Name of Applicant :**
1)Chandigarh University
Address of Applicant :National Highway 95, Chandigarh-Ludhiana Highway, Mohali, Punjab 140413, India. Mohali Punjab India
2)Chandigarh University Technology Business Incubator
(72)**Name of Inventor :**
1)Shailendra Singh Rajput

(57) Abstract :
A automated chimney cleaning device, comprises of a frame 1 positioned over a mouth portion of a chimney, an artificial intelligence based imaging unit 2 integrated with a processor for capturing and processing images of the mouth portion, plurality of motorized hinge joints 3 to regulate shape of the frame 1, plurality of suction cups 4 to affix the frame 1 with the mouth portion, a touch interactive display panel 5 to enable a user to provide input, an inverted L-shaped telescopic rod 6 to extend and insert within the chimney, an motorized disc 7 to detach accumulated smoke stack within the chimney by means of plurality of metallic chains 8 configured with periphery of the disc 7 and each equipped with a metallic block 9, an inverted L-shaped telescopic bar 13 to extend and position a motorized brush 14 to scrub the inner periphery to clean the chimney.

No. of Pages : 16 No. of Claims : 4

(12) PATENT APPLICATION PUBLICATION
(21) Application No.202411025425 A
(19) INDIA
(22) Date of filing of Application :28/03/2024
(43) Publication Date : 07/11/2025

(54) Title of the invention : HANDHELD SNACK PROCESSING AND PACKAGING ASSISTIVE DEVICE

(51) International classification	:A61B0017000000, G03H0001220000, F24C0007080000, A23L0007130000, G06Q0010080000
(31) Priority Document No	:NA
(32) Priority Date	:NA
(33) Name of priority country	:NA
(86) International Application No	:NA
Filing Date	:NA
(87) International Publication No	: NA
(61) Patent of Addition to Application Number	:NA
Filing Date	:NA
(62) Divisional to Application Number	:NA
Filing Date	:NA

(71)**Name of Applicant :**
1)Chandigarh University
Address of Applicant :National Highway 95, Chandigarh-Ludhiana Highway, Mohali, Punjab 140413, India. Mohali Punjab India
2)Chandigarh University Technology Business Incubator
(72)**Name of Inventor :**
1)Imran Anwar

(57) Abstract :
A handheld snack processing and packaging assistive device, comprising a curved-shaped body 1 having a first and second position, and attached with a handle 2, a curved-shaped plate 4 for allowing a user to collect fried snacks within body 1, a touch enabled screen 3 to give input commands regarding an amount of snack to be packed in an auxiliary container, an artificial intelligence-based imaging unit 5 detects exact location of snacks, a holographic projection unit 11 guides user in collecting snacks in body 1 through plate 4, a weight sensor detects amount of snack collected within body 1, a speaker 6 for notifying user to stop adding snacks in body 1, plurality of chambers 7 for storing different spices, a motorized iris lid 8, dispenses spices in body 1, a motorized circular disc 9 attached with a pair of flaps 10, for mixing species with snacks via flaps 10.

No. of Pages : 16 No. of Claims : 6

(12) PATENT APPLICATION PUBLICATION
(19) INDIA
(22) Date of filing of Application :27/03/2024
(21) Application No.202411024934 A
(43) Publication Date : 07/11/2025

(54) Title of the invention : ADAPTABLE ROLLER-STAND DEVICE

(51) International classification	:G06F0003041000, G01S0017931000, G01S0007481000, B61B0001020000, B29C0064245000
(31) Priority Document No	:NA
(32) Priority Date	:NA
(33) Name of priority country	:NA
(86) International Application No	:NA
Filing Date	:NA
(87) International Publication No	: NA
(61) Patent of Addition to Application Number	:NA
Filing Date	:NA
(62) Divisional to Application Number	:NA
Filing Date	:NA

(71)**Name of Applicant :**
1)Chandigarh University
Address of Applicant :National Highway 95, Chandigarh-Ludhiana Highway, Mohali, Punjab 140413, India. Mohali Punjab India
2)Chandigarh University Technology Business Incubator
(72)**Name of Inventor :**
1)Surender Kumar

(57) Abstract :
An adaptable roller-stand device comprises of a platform 1 positioned on a ground surface having a first and second section, an artificial intelligence-based imaging unit 2 installed on the platform 1 for capturing and processing images of the platform 1, a touch interactive display panel 3 installed on the platform 1 for receiving user's input, motorized wheels 4 arranged underneath the platform 1 to move the platform 1 over the surface, a LiDAR sensor 5 embedded on the platform 1 for determining distance of the object, hydraulically operated rods 6 integrated in between the platform 1 and the wheels to extend/retract for positioning the platform 1 underneath ends of the object, plurality of plates 7 configured on the first section of the platform 1 to tilt the plates 7, plurality of pop-out balls 8 are arranged on the plates 7 for allowing object to slide on platform 1.

No. of Pages : 17 No. of Claims : 6

(12) PATENT APPLICATION PUBLICATION
(21) Application No.202411024935 A
(19) INDIA
(22) Date of filing of Application :27/03/2024
(43) Publication Date : 07/11/2025

(54) Title of the invention : ADAPTABLE GRILLING ASSISTIVE DEVICE

(51) International classification	:H04B0007260000, H04N0001000000, A47J0037060000, G02B0027000000, G06F0003160000	(71)**Name of Applicant :** **1)Chandigarh University** Address of Applicant :National Highway 95, Chandigarh-Ludhiana Highway, Mohali, Punjab 140413, India. Mohali Punjab India **2)Chandigarh University Technology Business Incubator**
(31) Priority Document No	:NA	(72)**Name of Inventor :**
(32) Priority Date	:NA	**1)Arabinda Meher**
(33) Name of priority country	:NA	
(86) International Application No	:NA	
Filing Date	:NA	
(87) International Publication No	: NA	
(61) Patent of Addition to Application Number	:NA	
Filing Date	:NA	
(62) Divisional to Application Number	:NA	
Filing Date	:NA	

(57) Abstract :
An adaptable grilling assistive device, comprising a rectangular frame 1 accessed by a user to positon the body in proximity to a fixed surface of a cooking platform, a pair of telescopically operated rods 2 installed on the frame 1 for enabling a user to accommodate multiple eatables over the rods 2, an imaging unit 3 installed on the frame 1 to determine dimensions of the eatables inserted on each of the rod, a motorized sliding unit 4 integrated in between the frame 1 and each of the rod to translate the rods 2 in opposite directions for increasing/decreasing gap in between the rods 2, plurality of circular discs 5 arranged on the rods 2 for separating each of the inserted eatable at an appropriate distance and a speaker 6 installed on the platform to produce audio signals for notifying the user to remove the frame 1 from the grill.

No. of Pages : 15 No. of Claims : 4

(12) PATENT APPLICATION PUBLICATION
(21) Application No.202411024936 A
(19) INDIA
(22) Date of filing of Application :27/03/2024
(43) Publication Date : 07/11/2025

(54) Title of the invention : ADAPTABLE ANIMAL FEEDING DEVICE

(51) International classification	:G10L0015220000, A01K0005020000, A01C0017000000, A63B0069000000, A01D0078100000
(31) Priority Document No	:NA
(32) Priority Date	:NA
(33) Name of priority country	:NA
(86) International Application No	:NA
Filing Date	:NA
(87) International Publication No	: NA
(61) Patent of Addition to Application Number	:NA
Filing Date	:NA
(62) Divisional to Application Number	:NA
Filing Date	:NA

(71)**Name of Applicant :**
1)Chandigarh University
Address of Applicant :National Highway 95, Chandigarh-Ludhiana Highway, Mohali, Punjab 140413, India. Mohali Punjab India
2)Chandigarh University Technology Business Incubator
(72)**Name of Inventor :**
1)Jasmeet Kaur

(57) Abstract :
An adaptable animal feeding device, comprising a spherical frame 1 positioned over a ground surface and configured with a pair of semi-spherical members connected with each other via a motorized hinge 2, a shaft 3 wrapped with hay installed within the frame 1 accessed by an animal to consume hay, a microphone installed with the frame 1 to receive voice command, plurality of flaps 5 installed within cavities 4 by means of a hinge joint 6 to open a specific number of cavities 4, plurality of telescopic rods 7 installed over the frame 1 to position a suction unit 8 in contact with the surface for providing support to the frame 1, a weight sensor installed over the shaft 3 to determine weight of the wrapped hay, and a speaker installed over the frame 1 to produce a voice command to notify the user regrading refiling of the shaft 3.

No. of Pages : 18 No. of Claims : 6

(12) PATENT APPLICATION PUBLICATION
(21) Application No.202418095735 A
(19) INDIA
(22) Date of filing of Application :04/12/2024
(43) Publication Date : 07/11/2025

(54) Title of the invention : PROCESS FOR PREPARING CHEMICAL FORMULATIONS COMPRISING A NEUTRALIZED COMPONENT

(51) International classification	:C11D 1/37, C11D 11/00, C11D 11/04
(31) Priority Document No	:23173016.9
(32) Priority Date	:12/05/2023
(33) Name of priority country	:EPO
(86) International Application No	:PCT/EP2024/062189
Filing Date	:03/05/2024
(87) International Publication No	: NA
(61) Patent of Addition to Application Number	:NA
Filing Date	:NA
(62) Divisional to Application Number	:202417095213
Filed on	:03/12/2024

(71)**Name of Applicant :**
1)BASF SE
Address of Applicant :Carl-Bosch-Strasse 38 67056 Ludwigshafen am Rhein, Germany Germany
(72)**Name of Inventor :**
1)REIFEGERSTE, Simon
2)CHAN, Chee Jian
3)ALTVATER, Daniela
4)EBERIUS, Karin
5)KAIBEL, Bjoern

(57) Abstract :
The present invention relates to a continuous process for preparing a homogeneous chemical formulation comprising at least water, an ionic surfactant and a co-surfactant. The process comprises the steps of mixing at least one pre- cursor of the ionic surfactant, the co-surfactant and the neutralization agent by at least one mixing device selected from the group consisting of continuous stirred tank reactors, high shear mixers, mixing pumps, static mixers and mixing nozzles, and removing the obtained chemical formulation is through an outlet. The process is suitable for blending surfactant formulations comprising a neutralized component, and particularly useful for neutralized compo- nents which form a gel with water if the co-surfactant would not be present.

No. of Pages : 24 No. of Claims : 13

(12) PATENT APPLICATION PUBLICATION
(21) Application No.202411025426 A
(19) INDIA
(22) Date of filing of Application :28/03/2024
(43) Publication Date : 07/11/2025

(54) Title of the invention : AIR CONDITIONER FILTER CLEANING DEVICE

(51) International classification	:F24F0013280000, F24F0008100000, B01D0041040000, F24F0008900000, B01D0029640000	(71)**Name of Applicant :** **1)Chandigarh University** Address of Applicant :National Highway 95, Chandigarh-Ludhiana Highway, Mohali, Punjab 140413, India. Mohali Punjab India **2)Chandigarh University Technology Business Incubator**
(31) Priority Document No	:NA	(72)**Name of Inventor :**
(32) Priority Date	:NA	**1)Vinay Kumar**
(33) Name of priority country	:NA	
(86) International Application No	:NA	
Filing Date	:NA	
(87) International Publication No	: NA	
(61) Patent of Addition to Application Number	:NA	
Filing Date	:NA	
(62) Divisional to Application Number	:NA	
Filing Date	:NA	

(57) Abstract :
An air conditioner filter cleaning device, comprising a housing 1 positioned on a ground surface and installed with a platform 2 to be placed with an air conditioner filter, an artificial intelligence-based imaging unit 4 detects dimensions of filter, two motorized clamps 5 are translated by a pair of motorized sliders 6 for gripping periphery of filter in a secured manner, an air blower 7 removing dust from filter, an electronic nozzle 8 attached with a chamber 9 dispenses cleaning solution for loosening dirt accumulated on filter, a motorized brush 10 suspended from a ceiling portion by a telescopically operated rod 11 to remove dirt, a motorized two-axis lead screw arrangement 12 translates brush 10, an electronic valve 13 attached with a water container 14 to rinse filter, and thereafter blower 7 blows air to dry filter.

No. of Pages : 18 No. of Claims : 6

(12) PATENT APPLICATION PUBLICATION
(21) Application No.202411025427 A
(19) INDIA
(22) Date of filing of Application :28/03/2024
(43) Publication Date : 07/11/2025

(54) Title of the invention : AUTOMATED BOOK SCANNING DEVICE

(51) International classification	:B42D0009060000, H04N0001100000, B42D0009040000, H01Q0001220000, H04N0001000000	(71)**Name of Applicant :** **1)Chandigarh University** Address of Applicant :National Highway 95, Chandigarh-Ludhiana Highway, Mohali, Punjab 140413, India. Mohali Punjab India **2)Chandigarh University Technology Business Incubator**
(31) Priority Document No	:NA	(72)**Name of Inventor :**
(32) Priority Date	:NA	**1)Satarupa Mitra**
(33) Name of priority country	:NA	
(86) International Application No	:NA	
Filing Date	:NA	
(87) International Publication No	: NA	
(61) Patent of Addition to Application Number	:NA	
Filing Date	:NA	
(62) Divisional to Application Number	:NA	
Filing Date	:NA	

(57) Abstract :
An automated book scanning device, comprising a housing 1 positioned on a ground surface and installed with a V-shaped member 2 to scan a book that is placed on the member 2, a touch enabled screen 3 is installed on the housing 1 for enabling a user to give input commands for scanning the book, an artificial intelligence-based imaging unit 4 installed at a ceiling portion of the housing 1 for scanning the book, a motorized two-axis lead screw arrangement 5 for providing suitable bi-directional motion to the imaging unit 4 in view of scanning entire page of the book, a motorized clamp 6 installed within the housing 1 for turning pages of the book in view of allowing scanning of entire book and an air blower 7 mounted within the housing 1 for blowing air in view of removing dust from the book.

No. of Pages : 16 No. of Claims : 6

(12) PATENT APPLICATION PUBLICATION
(21) Application No.202413025243 A
(19) INDIA
(22) Date of filing of Application :28/03/2024
(43) Publication Date : 07/11/2025

(54) Title of the invention : SEED TREATMENT COMPOSITION AND METHOD THEREOF

(51) International classification	:A01N51/00, A01C1/06, A01N25/04, A01N43/54, A01N43/653, A01P3/00, A01P7/04	(71)**Name of Applicant :** **1)REDSON RETAIL & REALITY PVT. LTD.** Address of Applicant :A-88 ASHOK VIHAR PHASE - I, DELHI -110052 DELHI Delhi India (72)**Name of Inventor :** **1)SATYENDRA**
(31) Priority Document No	:NA	
(32) Priority Date	:NA	
(33) Name of priority country	:NA	
(86) International Application No	:NA	
Filing Date	:NA	
(87) International Publication No	: NA	
(61) Patent of Addition to Application Number	:	
Filed on	:01/01/1900	
(62) Divisional to Application Number	:NA	
Filing Date	:NA	

(57) Abstract :
The present invention relates to a novel, synergistic seed treatment composition comprising Pyraclostrobin as the first component, Thiophanate methyl as the second component Thiamethoxam as the third component and Soy protein as the fourth component along with at least one agricultural excipient, wherein said composition provides effective control of both insect and fungal pests in various agricultural crops. The invention further relates to the process for preparing said seed treatment composition.

No. of Pages : 25 No. of Claims : 14

(12) PATENT APPLICATION PUBLICATION
(21) Application No.202514019343 A
(19) INDIA
(22) Date of filing of Application :04/03/2025
(43) Publication Date : 07/11/2025

(54) Title of the invention : ELEMENT TO MEASURE THE OXYGEN CONTENT OF MOLTEN METALS

(51) International classification	:G01N0031220000, G01N0033205000, G01N0027411000, F23N0005000000, G01N0033202500
(31) Priority Document No	:24168446.3
(32) Priority Date	:04/04/2024
(33) Name of priority country	:EUROPEAN UNION
(86) International Application No	:NA
Filing Date	:NA
(87) International Publication No	: NA
(61) Patent of Addition to Application Number	:NA
Filing Date	:NA
(62) Divisional to Application Number	:NA
Filing Date	:NA

(71)**Name of Applicant :**
1)HERAEUS ELECTRO-NITE INTERNATIONAL N.V.
Address of Applicant :Centrum Zuid 1105, Houthalen, 3530 BE Belgium
(72)**Name of Inventor :**
1)BEX, Gert-Jan
2)NEYENS, Guido

(57) Abstract :
The present invention relates to an oxygen detecting element, comprising a coated pin. The coated pin comprises an electrically conductive core with a tapered section towards one end. The coating comprises a two-layered coating structure on a tip portion and a three-layered coating structure on a main portion of the electrically conductive core, wherein the tapered section has the same length or is longer than the tip portion. The invention further relates to an immersion sensor comprising the oxygen detecting element and a method for measuring the oxygen content of a metal melt with such an oxygen detecting element. Fig. 3

No. of Pages : 29 No. of Claims : 15

(12) PATENT APPLICATION PUBLICATION
(21) Application No.202514019418 A
(19) INDIA
(22) Date of filing of Application :04/03/2025
(43) Publication Date : 07/11/2025

(54) Title of the invention : ELEMENT TO MEASURE THE OXYGEN CONTENT OF MOLTEN METALS

(51) International classification	:G01N0031220000, G01N0027411000, G01N0033205000, G01N0021770000, G01N0027407000
(31) Priority Document No	:24168444.8
(32) Priority Date	:04/04/2024
(33) Name of priority country	:EUROPEAN UNION
(86) International Application No	:NA
Filing Date	:NA
(87) International Publication No	: NA
(61) Patent of Addition to Application Number	:NA
Filing Date	:NA
(62) Divisional to Application Number	:NA
Filing Date	:NA

(71)**Name of Applicant :**
1)HERAEUS ELECTRO-NITE INTERNATIONAL N.V.
Address of Applicant :Centrum Zuid 1105, Houthalen, 3530, Belgium Belgium
(72)**Name of Inventor :**
1)NEYENS, Guido
2)BEX, Gert-Jan

(57) Abstract :
The invention relates to an oxygen detecting element comprising a coated pin. The coated pin comprises an electrically conductive core, which is eccentrically arranged in a coating. The coating comprises at least a two-layered coating section with an inner coating layer comprising a reference material and an outer coating layer comprising an electrolyte material. The invention further relates to an immersion sensor comprising the oxygen detecting element and a method for measuring the oxygen content of a metal melt with such an oxygen detecting element.

No. of Pages : 26 No. of Claims : 12

(12) PATENT APPLICATION PUBLICATION
(21) Application No.202411025236 A
(19) INDIA
(22) Date of filing of Application :28/03/2024
(43) Publication Date : 07/11/2025

(54) Title of the invention : CONDENSED GRAPH DISTRIBUTION (CGD)-BASED GRAPH CONTINUAL LEARNING

(51) International classification	:G06F0016901000, G06N0003080000, H01L0029780000, G02F0001136200, H01L0023000000
(31) Priority Document No	:NA
(32) Priority Date	:NA
(33) Name of priority country	:NA
(86) International Application No	:NA
Filing Date	:NA
(87) International Publication No	: NA
(61) Patent of Addition to Application Number	:NA
Filing Date	:NA
(62) Divisional to Application Number	:NA
Filing Date	:NA

(71)**Name of Applicant :**
1)FUJITSU LIMITED
Address of Applicant :1-1 Kamikodanaka 4-chome, Nakahara-ku, Kawasaki-shi Kanagawa 211-8588, Japan Japan
(72)**Name of Inventor :**
1)NANDY, Jay
2)MONDAL, Arnab Kumar

(57) Abstract :
In an embodiment, operations include receiving a first graph associated with a first task following graph learning tasks including a sequence of second graphs. A set of sample graphs is selected from a set of condensed graph distributions (CGDs) associated with the graph learning tasks. A set of statistics associated with the set of CGDs is updated, based on one or more auxiliary graph neural network (GNN) models, the first graph, and the set of sample graphs. A first CGD associated with the first task is learned. A plurality of sample graphs is re-selected from the first CGD and the set of CGDs. A first loss corresponding to a prediction error associated with a downstream prediction task of the primary GNN model is determined. A prediction result associated with the downstream prediction task is generated by the primary GNN model, based on the first loss.

No. of Pages : 106 No. of Claims : 20

(12) PATENT APPLICATION PUBLICATION
(19) INDIA
(22) Date of filing of Application :28/03/2024
(21) Application No.202411025248 A
(43) Publication Date : 07/11/2025

(54) Title of the invention : EMERGENCY BRAKING SYSTEM INTEGRATED INTO MAIN BRAKING SYSTEM OF VEHICLE

(51) International classification	:B60T0007040000, B60T0013740000, B60T0008320000, B60T0013680000, B60T0008360000
(31) Priority Document No	:NA
(32) Priority Date	:NA
(33) Name of priority country	:NA
(86) International Application No	:NA
Filing Date	:NA
(87) International Publication No	: NA
(61) Patent of Addition to Application Number	:NA
Filing Date	:NA
(62) Divisional to Application Number	:NA
Filing Date	:NA

(71)**Name of Applicant :**
1)MARUTI SUZUKI INDIA LTD.
Address of Applicant :1, Nelson Mandela Road Vasant Kunj New Delhi India 110070 DELHI Delhi India
(72)**Name of Inventor :**
1)MANISH MISHRA

(57) Abstract :
An emergency braking system integrated into a main braking system of a vehicle (V), includes a brake pedal position sensor (S1), a piezoelectric sensor (S2), a fluid pressure unit (20), and a fluid modulator (30). The brake pedal position sensors (S1) and the piezoelectric sensor (S2) may be positioned on a brake pedal (BP). The fluid pressure unit (20) may be coupled to the brake pedal (BP). The fluid modulator (30) may be fluidly coupled to the fluid pressure unit (20) and wheel brakes (WB). The fluid modulator (30) includes fluid supply lines (36) extending from the fluid pressure unit (20) and coupled to the respective wheel brakes (WB), fluid return lines (38) extending from the respective fluid supply line and coupled to a fluid reservoir (32) and auxiliary fluid lines (40) extending from the respective fluid supply line and coupled to each respective wheel brake (WB). Each auxiliary fluid line (40) is configured to store the fluid at high pressure and includes a non-return valve (42) configured to block reverse flow of the stored fluid and a solenoid valve (44) operated by a control unit (100) to supply the high pressurized stored fluid to the respective wheel brake to apply brakes on the wheels (W) of the vehicle (V). Figure 2 is a representative figure.

No. of Pages : 31 No. of Claims : 15

(12) PATENT APPLICATION PUBLICATION
(19) INDIA
(22) Date of filing of Application :28/03/2024
(21) Application No.202411025266 A
(43) Publication Date : 07/11/2025

(54) Title of the invention : An Automatic Waste Removal Device from the Drainage Water

(51) International classification	:E03F0005060000, A01K0063040000, C02F0001280000, B01J0020280000, C02F0003340000	(71)**Name of Applicant :** **1)AURAV RAJPUT** Address of Applicant :S/o Naresh D Singh, Sounthal, Budhi, Kathua Jammu and Kashmir kathua Jammu & Kashmir India (72)**Name of Inventor :** **1)AURAV RAJPUT**
(31) Priority Document No	:NA	
(32) Priority Date	:NA	
(33) Name of priority country	:NA	
(86) International Application No	:NA	
Filing Date	:NA	
(87) International Publication No	: NA	
(61) Patent of Addition to Application Number	:NA	
Filing Date	:NA	
(62) Divisional to Application Number	:NA	
Filing Date	:NA	

(57) Abstract :
An automatic waste removal device from drainage water comprises a waste collector tyne (1) adapted to be secured with a chain rotating means (2), is provided to collect waste from drainage water. The chain rotating means (2) secured with a frame stand (3), is provided on either sides of the frame such that to rotate the tyne (1). A support plate (4) secured with chain rotating means (2), is provided to hold a motor (5) secured therewith such that to rotate the chain of the chain rotating means (2). Plurality of guide rails (6) is provided between the chain rotating means (2) such that to prevent misalignment of the waste collector tyne (1). A collection box (7) is provided at the back side of frame stand (3) such that to collect the garbage. [Fig.1]

No. of Pages : 13 No. of Claims : 4

(12) PATENT APPLICATION PUBLICATION
(21) Application No.202514026628 A
(19) INDIA
(22) Date of filing of Application :23/03/2025
(43) Publication Date : 07/11/2025

(54) Title of the invention : LIGHT FIELD DISPLAY BASED ON RELATIVE LOCATION OF VIEWER

(51) International classification	:G02B0027010000, G06F0003010000, G06T0019000000, G02B0027000000, H04N0013383000
(31) Priority Document No	:18/630,144
(32) Priority Date	:09/04/2024
(33) Name of priority country	:U.S.A.
(86) International Application No	:NA
Filing Date	:NA
(87) International Publication No	: NA
(61) Patent of Addition to Application Number	:NA
Filing Date	:NA
(62) Divisional to Application Number	:NA
Filing Date	:NA

(71)**Name of Applicant :**
1)Distance Technologies Oy
Address of Applicant :John Stenbergin ranta 2, 00530 Helsinki, Finland Finland
(72)**Name of Inventor :**
1)Urho Konttori
2)Joonas Itäranta
3)Mikko Strandborg

(57) Abstract :
Tracking means (104) are utilised to determine a relative location of a first eye (124a, 202a, 312a, 416a, 422a, 504, 806a) and of a second eye (124b, 202b, 312b, 416b, 422b, 504, 806b) of user(s) (126) with respect to an optical combiner (108). An input (502) for a light field display unit (106, 302, 400, 804) is generated, based on the relative location of the first eye and of the second eye. The input is employed at the light field display unit to produce a synthetic light field (130), wherein the optical combiner is employed to reflect a first part and a second part of the synthetic light field towards the first eye and the second eye, respectively, whilst optically combining the first part and the second part of the synthetic light field with a real-world light field (112) of a real-world environment (102). FIG. 1

No. of Pages : 63 No. of Claims : 20

(12) PATENT APPLICATION PUBLICATION
(19) INDIA
(22) Date of filing of Application :18/03/2025
(21) Application No.202514024166 A
(43) Publication Date : 07/11/2025

(54) Title of the invention : YARN WINDER

(51) International classification	:B65H0054280000, B65H0051220000, B65H0057220000, B65H0067048000, B65H0054520000
(31) Priority Document No	:2024-066036
(32) Priority Date	:16/04/2024
(33) Name of priority country	:Japan
(86) International Application No	:NA
Filing Date	:NA
(87) International Publication No	: NA
(61) Patent of Addition to Application Number	:NA
Filing Date	:NA
(62) Divisional to Application Number	:NA
Filing Date	:NA

(71)**Name of Applicant :**
1)TMT Machinery, Inc.
Address of Applicant :6th Fl., Osaka Green Bldg., 2-6-26 Kitahama, Chuo-ku, Osaka-shi, Osaka 541-0041, Japan Japan
(72)**Name of Inventor :**
1)YONEKURA Tosei

(57) Abstract :
Yarns having been threaded to distribution guides are accurately and easily are accurately and easily threaded to 5 bobbins. A yarn winder 5 includes: bobbin holder 13 to which bobbins B are attached; fulcrum guides 15; a contact roller 17 which is provided above the bobbin holder 13 and below the fulcrum guides 15; a yarn catching unit 40; and a yarn threading unit 45. The yarn catching unit 40 includes yarn 10 catching portions 41. The yarn threading unit 45 has yarn holding portions 51 aligned in the front-rear direction, and is configured to receive, by the yarn holding portions 51, the yarns Y caught by the yarn catching unit 40, and to guide the yarns Y to positions where the yarns Y are threaded 15 to the respective bobbins B. The yarn catching unit 40 is arranged to catch the yarns Y at positions that are closer to the fulcrum guides 15 than the contact roller 17 in the up-down direction. Furthermore, the yarn catching unit 40 is arranged to be movable to the handover position where the 20 caught yarns Y are handed over to the yarn holding portions 51.

No. of Pages : 63 No. of Claims : 7

(12) PATENT APPLICATION PUBLICATION
(21) Application No.202514024170 A
(19) INDIA
(22) Date of filing of Application :18/03/2025
(43) Publication Date : 07/11/2025

(54) Title of the invention : YARN SPINNING SYSTEM

(51) International classification	:B65H0063000000, D01H0001020000, D01H0013320000, D02G0003160000, D01H0013160000
(31) Priority Document No	:2024-064637
(32) Priority Date	:12/04/2024
(33) Name of priority country	:Japan
(86) International Application No	:NA
Filing Date	:NA
(87) International Publication No	: NA
(61) Patent of Addition to Application Number	:NA
Filing Date	:NA
(62) Divisional to Application Number	:NA
Filing Date	:NA

(71)**Name of Applicant :**
1)TMT Machinery, Inc.
Address of Applicant :6th Fl., Osaka Green Bldg., 2-6-26 Kitahama, Chuo-ku, Osaka-shi, Osaka 541-0041, Japan Japan
(72)**Name of Inventor :**
1)MATSUDA Ryo
2)YOSHIDA Kazuto

(57) Abstract :
An object of the present invention is to easily grasp the temperature of a spinneret 31 in a contactless manner. 5 A spinning apparatus 3, a reflector 8, and a thermal camera 9 are provided. The spinning apparatus 3 includes the spinneret 31 configured to spin out a yarn Y. The reflector 8 is provided at a position on which a beam of infrared light radiated from the spinneret 31 is incident, and is 10 configured to reflect the incident beam of infrared light. The thermal camera 9 is able to measure the temperature distribution of the spinneret 31 by receiving the beam of infrared light reflected by the reflector 8. The reflector 8 is opposite to the thermal camera 9 over a yarn path of 15 the yarn Y spun out from the spinneret 31. The thermal camera 9 is provided at a movable running body 10.

No. of Pages : 47 No. of Claims : 11

(12) PATENT APPLICATION PUBLICATION
(21) Application No.202514024332 A
(19) INDIA
(22) Date of filing of Application :18/03/2025
(43) Publication Date : 07/11/2025

(54) Title of the invention : VEHICLE SIDE PORTION STRUCTURE

(51) International classification	:B62D0021150000, B62D0025040000, B62D0025020000, B60R0021231000, B62D0027020000
(31) Priority Document No	:2024-062916
(32) Priority Date	:09/04/2024
(33) Name of priority country	:Japan
(86) International Application No	:NA
Filing Date	:NA
(87) International Publication No	: NA
(61) Patent of Addition to Application Number	:NA
Filing Date	:NA
(62) Divisional to Application Number	:NA
Filing Date	:NA

(71)**Name of Applicant :**
1)TOYOTA JIDOSHA KABUSHIKI KAISHA
Address of Applicant :1, Toyota-cho, Toyota-shi, Aichi-ken 471-8571, Japan Japan
(72)**Name of Inventor :**
1)SAEKI, Koji

(57) Abstract :
A vehicle side portion structure has: a pillar 32 extending in a vehicle vertical direction at a vehicle side portion 10; a rocker 34 extending in a vehicle longitudinal direction at a lower 5 side of the pillar 32 and connected to the pillar 32, and structured to include a main body portion 56 and an extending portion 58 that extends toward a vehicle transverse direction inner side from an upper portion of the main body portion 56; and a frame member 28 disposed at a vehicle transverse direction inner side of the main body portion 56 and a vehicle lower side of the extending portion 58.

No. of Pages : 35 No. of Claims : 16

(12) PATENT APPLICATION PUBLICATION
(21) Application No.202514024412 A
(19) INDIA
(22) Date of filing of Application :19/03/2025
(43) Publication Date : 07/11/2025

(54) Title of the invention : CLUTCH DEVICE

(51) International classification	:F16F0001120000, F16F0015123000, F16D0025120000, B60G0011160000, F16D0025063800
(31) Priority Document No	:2024-065533
(32) Priority Date	:15/04/2024
(33) Name of priority country	:Japan
(86) International Application No	:NA
Filing Date	:NA
(87) International Publication No	: NA
(61) Patent of Addition to Application Number	:NA
Filing Date	:NA
(62) Divisional to Application Number	:NA
Filing Date	:NA

(71)**Name of Applicant :**
1)EXEDY Corporation
Address of Applicant :1-1, Kidamotomiya 1-chome, Neyagawa-shi, Osaka 572-8570 JAPAN Japan
(72)**Name of Inventor :**
1)IMANISHI, Yoshio

(57) Abstract :
It is intended to prevent a support plate from being abraded. The present clutch device includes a first rotor, a second rotor, a support plate, a coil spring, and a spring seat. The first rotor includes a pillar portion extending to a first side in an axial direction. The second rotor is disposed to be movable with respect to the first rotor in the axial direction. The support plate is attached to the pillar portion. The coil spring is disposed between the second rotor and the support plate in the axial direction. The coil spring is disposed away from the pillar portion at an interval in a circumferential direction. The spring seat is disposed between the coil spring and the support plate. The spring seat extends along the support plate in the circumferential direction. The spring seat has an annular shape.

No. of Pages : 25 No. of Claims : 11

(12) PATENT APPLICATION PUBLICATION
(21) Application No.202514019429 A
(19) INDIA
(22) Date of filing of Application :04/03/2025
(43) Publication Date : 07/11/2025

(54) Title of the invention : VEHICLE FRONT STRUCTURE

(51) International classification	:B62D0021150000, B62D0025080000, H04L0065612000, A61M0011040000, B60R0013080000
(31) Priority Document No	:2024- 059052
(32) Priority Date	:01/04/2024
(33) Name of priority country	:Japan
(86) International Application No	:NA
Filing Date	:NA
(87) International Publication No	: NA
(61) Patent of Addition to Application Number	:NA
Filing Date	:NA
(62) Divisional to Application Number	:NA
Filing Date	:NA

(71)**Name of Applicant :**
1)TOYOTA JIDOSHA KABUSHIKI KAISHA
Address of Applicant :1, Toyota-cho, Toyota-shi, Aichi-ken, 471-8571, Japan Japan
(72)**Name of Inventor :**
1)SAEKI, Koji

(57) Abstract :
A vehicle front structure (10) includes a dash module (20) that separates an inside and an outside of a vehicle cabin from each other, the dash module (20) having a channel (24) for a cooling refrigerant extending in the vehicle-width direction, and at least one heat 5 generating device (34, 36) disposed in contact with or close to the dash module (20).

No. of Pages : 32 No. of Claims : 13

(12) PATENT APPLICATION PUBLICATION
(21) Application No.202514020219 A
(19) INDIA
(22) Date of filing of Application :06/03/2025
(43) Publication Date : 07/11/2025

(54) Title of the invention : BELT TRANSMISSION DEVICE FOR ENGINE

(51) International classification	:F16H0007080000, F02B0067060000, F16H0007120000, B60H0001320000, H02K0001180000
(31) Priority Document No	:2024-059598
(32) Priority Date	:02/04/2024
(33) Name of priority country	:Japan
(86) International Application No	:NA
Filing Date	:NA
(87) International Publication No	: NA
(61) Patent of Addition to Application Number	:NA
Filing Date	:NA
(62) Divisional to Application Number	:NA
Filing Date	:NA

(71)**Name of Applicant :**
1)SUZUKI MOTOR CORPORATION
Address of Applicant :300 Takatsuka-cho, Chuo-ku, Hamamatsu-shi, Shizuoka 432-8611 Japan
(72)**Name of Inventor :**
1)SHIMOYAMA Daisuke

(57) Abstract :
A support bracket (40) includes a first fixing portion (41) and a second fixing portion (42) that are fixed to the oil pan (6), accessory machine attachment portions (43, 44) to which an air-conditioning compressor (12) and a motor generator (14) are respectively attached, and a front wall portion (45) continuous with the first fixing portion (41), the second fixing portion (42), and the accessory machine attachment portions (43, 44). The air-conditioning compressor (12) is disposed below the accessory machine attachment portions (43, 44), the motor generator (14) is disposed above the accessory machine attachment portions (43, 44), and a coupling portion (35) is attached to the front wall portion (45). A first tensioner pulley (31) is disposed in a first belt span (16A) and a second tensioner pulley (32) is disposed in a second belt span (16B).

No. of Pages : 25 No. of Claims : 3

(12) PATENT APPLICATION PUBLICATION
(21) Application No.202514020943 A
(19) INDIA
(22) Date of filing of Application :07/03/2025
(43) Publication Date : 07/11/2025

(54) Title of the invention : SINGLE-LEVER MIXER TAP

(51) International classification	:F16K0011078000, E03C0001040000, F16K0027040000, F16K0011000000, E03C0001050000
(31) Priority Document No	:102024000007525
(32) Priority Date	:04/04/2024
(33) Name of priority country	:Italy
(86) International Application No	:NA
Filing Date	:NA
(87) International Publication No	: NA
(61) Patent of Addition to Application Number	:NA
Filing Date	:NA
(62) Divisional to Application Number	:NA
Filing Date	:NA

(71)**Name of Applicant :**
1)FIMA CARLO FRATTINI S.P.A.
Address of Applicant :Via Borgomanero, 105 28010 - Briga Novarese (NO), Italy Italy
(72)**Name of Inventor :**
1)VERCELLI, Davide

(57) Abstract :
Single-lever mixer tap (1), comprising: - a tubular body (2) with a substantially vertical axis, - a cup (10), housed in the tubular body (2), provided with two inlet holes (12) for hot and cold water and one outlet hole for mixed water, in communication with a spout (7), - a mixing cartridge (20) arranged in the cup (10), provided with two inlet holes (28) for hot and cold water and one outlet hole (29) for mixed water, in communication with the corresponding inlet (12) and outlet holes (13) present in the cup (10), - a lever (22) protruding above from the cartridge (20), which can be actuated in an oscillatory and rotary direction by means of a handle (25) for the opening/closing of the flow and mixing, respectively, wherein said handle (25) constitutes an extension of said tubular body (2) and comprises a lower handle body (30) and an upper handle body (40), coupled together along opposing inclined surfaces, so that they can rotate together and with the possibility of linear sliding, from top to bottom and vice versa, along said inclined surfaces, of the upper handle body (40) with respect to the lower handle body (30). Fig. 6B

No. of Pages : 20 No. of Claims : 10

(12) PATENT APPLICATION PUBLICATION
(21) Application No.202514020953 A
(19) INDIA
(22) Date of filing of Application :07/03/2025
(43) Publication Date : 07/11/2025

(54) Title of the invention : VEHICLE LOWER-PORTION STRUCTURE

(51) International classification	:B60K0001040000, H01M0050249000, B62J0043160000, B60L0050640000, H01M0050262000
(31) Priority Document No	:2024-062563
(32) Priority Date	:09/04/2024
(33) Name of priority country	:Japan
(86) International Application No	:NA
Filing Date	:NA
(87) International Publication No	: NA
(61) Patent of Addition to Application Number	:NA
Filing Date	:NA
(62) Divisional to Application Number	:NA
Filing Date	:NA

(71)**Name of Applicant :**
1)TOYOTA JIDOSHA KABUSHIKI KAISHA
Address of Applicant :1, Toyota-cho, Toyota-shi, Aichi-ken 471-8571, Japan Japan
(72)**Name of Inventor :**
1)MOTOI, Daisuke
2)SHIGIHARA, Takayoshi
3)TAKASAWA, Hideki
4)YAMAMOTO, Yo
5)SAEKI, Koji
6)HIGASHIHARA, Katsunori
7)HAYASE, Jun

(57) Abstract :
A vehicle lower-portion structure includes a battery case (12) disposed in a lower portion of a vehicle, the battery case accommodating a battery (BT), a crossmember (20) disposed on a vehicle upper side from the battery case (12), the crossmember (20) extending 5 in a vehicle-width direction, a bracket (40) provided between the battery case (12) and the crossmember (20), the bracket (40) including a joining portion (40A) joined to an upper surface of the battery case (12) and a fastening portion (40B) having an insertion hole (41A), and a fastener (44) provided through the insertion hole (41A) to fix the crossmember (20) and the battery case (12). 10 Selected drawing: FIG. 3 24

No. of Pages : 32 No. of Claims : 15

(12) PATENT APPLICATION PUBLICATION
(21) Application No.202514021409 A
(19) INDIA
(22) Date of filing of Application :10/03/2025
(43) Publication Date : 07/11/2025

(54) Title of the invention : DISPLAY DEVICE AND ELECTRONIC DEVICE INCLUDING THE SAME

(51) International classification	:H10K0059122000, H10K0059120000, H10K0059400000, H10K0071000000, H10K0050860000
(31) Priority Document No	:10-2024-0044760
(32) Priority Date	:02/04/2024
(33) Name of priority country	:Republic of Korea
(86) International Application No	:NA
Filing Date	:NA
(87) International Publication No	: NA
(61) Patent of Addition to Application Number	:NA
Filing Date	:NA
(62) Divisional to Application Number	:NA
Filing Date	:NA

(71)**Name of Applicant :**
1)Samsung Display Co., Ltd.
Address of Applicant :1, Samsung-Ro, Giheung-Gu, Yongin-si, Gyeonggi-Do, Korea Republic of Korea
(72)**Name of Inventor :**
1)CHANG-YEOL LEE
2)JIN-YUP KIM
3)HAGYEONG SONG
4)JOONG-SOO MOON
5)YOUNGJIN CHO

(57) Abstract :
A display device includes a base layer, and a circuit element layer including a driver on the base layer overlapping a non-display region, and a display element layer on the circuit element layer. The display element layer includes a pixel defining layer on the circuit element layer, and a light emission element overlapping a display region including a light emission layer. The pixel defining layer includes a light emission opening overlapping the display region and at least having the light emission layer disposed in the light emission opening, a driving opening overlapping the non-display region, overlapping the driver, and a dummy opening overlapping the non-display region and between the light emission opening and the driving opening. The dummy opening has a substantially planar shape substantially the same as a planar shape of the light emission opening or the driving opening.

No. of Pages : 70 No. of Claims : 20

(12) PATENT APPLICATION PUBLICATION
(21) Application No.202514026629 A
(19) INDIA
(22) Date of filing of Application :23/03/2025
(43) Publication Date : 07/11/2025

(54) Title of the invention : IMPROVING TRACKING ACCURACY WITH HEAD POSE

(51) International classification	:G06F0003010000, G06F0003034600, A61B0005110000, H04S0007000000, G06T0007730000	(71)**Name of Applicant :** **1)Distance Technologies Oy** Address of Applicant :John Stenbergin ranta 2, 00530 Helsinki, Finland Finland
(31) Priority Document No	:18/630,154	(72)**Name of Inventor :** **1)Mikko Strandborg**
(32) Priority Date	:09/04/2024	**2)Urho Konttori**
(33) Name of priority country	:U.S.A.	**3)Thomas Carlsson**
(86) International Application No	:NA	
Filing Date	:NA	
(87) International Publication No	: NA	
(61) Patent of Addition to Application Number	:NA	
Filing Date	:NA	
(62) Divisional to Application Number	:NA	
Filing Date	:NA	

(57) Abstract :
Tracking means (102, 806) is utilised to track a position and an orientation of a head (206) of user(s) (204, 402, 812) sitting inside a vehicle (202, 404). A vehicular acceleration signal (302) is determined for a first time period (306), based on at least one of: an acceleration, an orientation of the vehicle sensed by sensor(s) (104) during the first time period. Transformation(s) is/are applied to the vehicular acceleration signal to generate a head acceleration signal (304) for a second time period (308), wherein the head acceleration signal is indicative of a change in at least one of: an acceleration, the orientation of the head. An expected head movement of the user(s) is determined, based on the head acceleration signal. The position and the orientation of the head being tracked by utilising the tracking means are refined, based on the expected head movement. FIG. 1

No. of Pages : 53 No. of Claims : 18

(12) PATENT APPLICATION PUBLICATION
(21) Application No.202514026630 A
(19) INDIA
(22) Date of filing of Application :23/03/2025
(43) Publication Date : 07/11/2025

(54) Title of the invention : LOCAL DIMMING AND COMPENSATION IN LIGHT FIELD DISPLAY

(51) International classification	:G02B0027010000, G06F0003010000, G06V0040160000, G02B0027000000, F21V0008000000
(31) Priority Document No	:18/630,202
(32) Priority Date	:09/04/2024
(33) Name of priority country	:U.S.A.
(86) International Application No	:NA
Filing Date	:NA
(87) International Publication No	: NA
(61) Patent of Addition to Application Number	:NA
Filing Date	:NA
(62) Divisional to Application Number	:NA
Filing Date	:NA

(71)**Name of Applicant :**
1)Distance Technologies Oy
Address of Applicant :John Stenbergin ranta 2, 00530 Helsinki, Finland Finland
(72)**Name of Inventor :**
1)Urho Konttori
2)Mikko Strandborg

(57) Abstract :
An optical combiner (108, 402) is employed to reflect a first part and a second part of a synthetic light field (116) towards a first eye (122a, 202a, 316a, 322a, 410a) and a second eye (122b, 202b, 316b, 322b, 410b) of user(s) (124), respectively, whilst optically combining the first part and the second part with a real-world light field (114). Portion(s) (412a, 412b) of the optical combiner from which a part of the synthetic light field is reflecting towards a given eye (410a, 410b) of a given user is determined, based on a relative location of the given eye with respect to the optical combiner. Portion(s) of active optical device(s) (110) that corresponds to the portion(s) of the optical combiner are activated, to decrease transmittance of the real-world light field passing through the portion(s) of the optical combiner towards the given eye, and/or to increase reflectance of the synthetic light field being reflected by the portion(s) of the optical combiner towards the given eye. FIG. 1

No. of Pages : 62 No. of Claims : 20

(12) PATENT APPLICATION PUBLICATION
(21) Application No.202514026635 A
(19) INDIA
(22) Date of filing of Application :23/03/2025
(43) Publication Date : 07/11/2025

(54) Title of the invention : DISPLAY CURVATURE COMPENSATION BASED ON RELATIVE LOCATION OF USER

(51) International classification	:G02B0027010000, H04N0023630000, G06T0019000000, G09G0003000000, G06F0003010000
(31) Priority Document No	:18/630,182
(32) Priority Date	:09/04/2024
(33) Name of priority country	:U.S.A.
(86) International Application No	:NA
Filing Date	:NA
(87) International Publication No	: NA
(61) Patent of Addition to Application Number	:NA
Filing Date	:NA
(62) Divisional to Application Number	:NA
Filing Date	:NA

(71)**Name of Applicant :**
1)Distance Technologies Oy
Address of Applicant :John Stenbergin ranta 2, 00530 Helsinki, Finland Finland
(72)**Name of Inventor :**
1)Mikko Strandborg
2)Urho Konttori

(57) Abstract :
Tracking means (104) is utilised to determine a relative location of eyes (120a-b) of at least one user (122) with respect to an optical combiner (110). The optical combiner is arranged on an optical path of a display unit (106) and on an optical path of real-world light (114) emanating from a real-world environment (102). A display image is generated, based on a curvature of a light-emitting surface (108) of the display unit, a relative location of the optical combiner with respect to the display unit, and the relative location of the eyes of the at least one user with respect to the optical combiner. The display image is displayed via the display unit. The optical combiner is employed to reflect light (126) emanating from the light-emitting surface of the display unit towards the eyes of the at least one user, whilst optically combining said light with the real-world light. FIG. 1

No. of Pages : 38 No. of Claims : 14

(12) PATENT APPLICATION PUBLICATION
(21) Application No.202514026637 A
(19) INDIA
(22) Date of filing of Application :23/03/2025
(43) Publication Date : 07/11/2025

(54) Title of the invention : DYNAMIC LIGHT STEERING BASED ON RELATIVE LOCATION OF VIEWER

(51) International classification	:G06F0003010000, G09G0003000000, H04N0013344000, G02B0030100000, G02B0027010000
(31) Priority Document No	:18/630,168
(32) Priority Date	:09/04/2024
(33) Name of priority country	:U.S.A.
(86) International Application No	:NA
Filing Date	:NA
(87) International Publication No	: NA
(61) Patent of Addition to Application Number	:NA
Filing Date	:NA
(62) Divisional to Application Number	:NA
Filing Date	:NA

(71)**Name of Applicant :**
1)Distance Technologies Oy
Address of Applicant :John Stenbergin ranta 2, 00530 Helsinki, Finland Finland
(72)**Name of Inventor :**
1)Mikko Strandborg
2)Urho Konttori

(57) Abstract :
A light field image is displayed via a light field display unit (204, 306, 500) to produce a synthetic light field (320). A light-steering optical device (212, 410, 506) is controlled, based on a relative location of a first eye (316a, 404a, 512a, 514a) and a second eye (316b, 404b, 512b, 514b) of user(s) (318) with respect to an imaginary image plane, to direct light (414a) emanating from a first set of photo-emitting cells towards the first eye and light (414b) emanating from a second set of photo-emitting cells of the light-emitting surface (208, 402, 502) towards the second eye. When controlling the light-steering optical device, a first viewing direction and a second viewing direction are determined for a given first photo-emitting cell and a given second photo-emitting cell, respectively. Light emanating from the given first photo-emitting cell and from the given second photo-emitting cell is directed along the first viewing direction and the second viewing direction, respectively. FIG. 2

No. of Pages : 51 No. of Claims : 18

(12) PATENT APPLICATION PUBLICATION
(21) Application No.202514021995 A
(19) INDIA
(22) Date of filing of Application :11/03/2025
(43) Publication Date : 07/11/2025

(54) Title of the invention : METHOD AND SYSTEM FOR DETERMINING A PARAMETER OF A HIGH TEMPERATURE LIQUID

(51) International classification	:G01F23/24, G01F23/80
(31) Priority Document No	:24169906.5
(32) Priority Date	:12/04/2024
(33) Name of priority country	:EPO
(86) International Application No	:NA
Filing Date	:NA
(87) International Publication No	: NA
(61) Patent of Addition to Application Number	:NA
Filing Date	:NA
(62) Divisional to Application Number	:NA
Filing Date	:NA

(71)**Name of Applicant :**
1)HERAEUS ELECTRO-NITE INTERNATIONAL N.V.
Address of Applicant :Centrum Zuid 1105, Houthalen, 3530, Belgium Belgium
(72)**Name of Inventor :**
1)NEYENS, Guido
2)BEX, Gert-Jan
3)STUER, Giovanni
4)VROMANS, Martijn

(57) Abstract :
The present invention relates to a method for determining at least one parameter of a high temperature liquid with a sensor unit and a system to carry out the method. A measuring probe releasably carrying the sensor unit is provided to acceleration means, which accelerates the sensor unit after separation from the measuring probe. The acceleration means is provided in a distance DA to the surface of the high temperature liquid and the distance DA between the surface of the high temperature liquid is less than 50 % of the distance of the surface of the high temperature liquid to the opening of the container DM. The sensor unit is projected in the direction of the high temperature liquid, immersed under the surface and the parameter of interest is measured. The invention further relates to a system suitable to carry out the inventive method and a metallurgical vessel comprising the inventive system. (Fig. 2)

No. of Pages : 35 No. of Claims : 13

(12) PATENT APPLICATION PUBLICATION
(21) Application No.202514022304 A
(19) INDIA
(22) Date of filing of Application :12/03/2025
(43) Publication Date : 07/11/2025

(54) Title of the invention : MEASURING PROBE FOR MOLTEN METAL

(51) International classification	:A61B0005000000, G01N0027411000, E21B0047060000, B22F0012440000, B22F0012900000
(31) Priority Document No	:24169906.5
(32) Priority Date	:12/04/2024
(33) Name of priority country	:Belgium
(86) International Application No	:NA
Filing Date	:NA
(87) International Publication No	: NA
(61) Patent of Addition to Application Number	:NA
Filing Date	:NA
(62) Divisional to Application Number	:NA
Filing Date	:NA

(71)**Name of Applicant :**
1)HERAEUS ELECTRO-NITE INTERNATIONAL N.V.
Address of Applicant :Centrum Zuid 1105, Houthalen, 3530, Belgium Belgium
(72)**Name of Inventor :**
1)NEYENS, Guido
2)BEX, Gert-Jan
3)STEVENS, Frank

(57) Abstract :
The present invention relates to a measuring probe for a molten metal, comprising a sensor unit adapted to determine at least one parameter of the molten metal, a signal line connected to the sensor und and a carrier element. The sensor unit comprises a sensing element and a metal body. The signal line comprises at least two wires and the inner diameter of the carrier tube is between 7 to 20 time the outer diameter of the wires. In a further aspect, the invention relates to a method to measure the at least one parameter of a metal melt. (Fig. 1)

No. of Pages : 32 No. of Claims : 14

(12) PATENT APPLICATION PUBLICATION
(21) Application No.202514022343 A
(19) INDIA
(22) Date of filing of Application :12/03/2025
(43) Publication Date : 07/11/2025

(54) Title of the invention : ROLLING SETTING ASSIST DEVICE AND ROLLING SETTING ASSIST METHOD

(51) International classification	:A61H0003000000, F16C0033780000, G01B0011240000, A61F0005000000, C21D0001180000
(31) Priority Document No	:2024-060879
(32) Priority Date	:04/04/2024
(33) Name of priority country	:Japan
(86) International Application No	:NA
Filing Date	:NA
(87) International Publication No	: NA
(61) Patent of Addition to Application Number	:NA
Filing Date	:NA
(62) Divisional to Application Number	:NA
Filing Date	:NA

(71)**Name of Applicant :**
1)Hitachi, Ltd.
Address of Applicant :6-6, Marunouchi 1-chome, Chiyoda-ku, Tokyo 100-8280, Japan Japan
(72)**Name of Inventor :**
1)Minseok Park
2)Masahiro Kayama
3)Masayoshi Tachibana
4)Shigetoshi Kurihara

(57) Abstract :
To be able to appropriately select a process condition of rolling to be optimized in order to be able to manufacture a rolling material having desired mechanical material quality. A rolling setting assist device 15 according to an aspect of the present invention includes a material quality singular point and reference point calculation unit 152a detecting a material quality singular point at which singularity in mechanical material quality occurs in a longitudinal direction of a rolling material 4, a tissue feature amount selection unit 152c selecting a tissue feature amount of the rolling material 4 having high correlation with the mechanical material quality in which the material quality singular point is detected, an element process identification unit 152d identifying, on the basis of information on the selected tissue feature amount, an element process of a hot rolling line 3 in which the singularity in the mechanical material quality occurs, and a process condition optimization unit 152e optimizing a process condition in the identified element process.

No. of Pages : 86 No. of Claims : 8

(12) PATENT APPLICATION PUBLICATION
(21) Application No.202514022779 A
(19) INDIA
(22) Date of filing of Application :13/03/2025
(43) Publication Date : 07/11/2025

(54) Title of the invention : MOTOR DEVICE

(51) International classification	:H02K0001200000, H02K0011215000, H02K0007116000, H02K0001120000, H02K0001160000
(31) Priority Document No	:2024-062778
(32) Priority Date	:09/04/2024
(33) Name of priority country	:Japan
(86) International Application No	:NA
Filing Date	:NA
(87) International Publication No	: NA
(61) Patent of Addition to Application Number	:NA
Filing Date	:NA
(62) Divisional to Application Number	:NA
Filing Date	:NA

(71)**Name of Applicant :**
1)MITSUBA CORPORATION
Address of Applicant :2681, HIROSAWACHO 1-CHOME, KIRYU-SHI, GUNMA 3768555, JAPAN Japan
(72)**Name of Inventor :**
1)TOZUKA, Yosuke

(57) Abstract :
An axial central part of a ring magnet (43) deviates to a side opposite to an abutment direction of an abutment member (44) against a first ball bearing (23), with respect to an axial central part of a stator core (31). Thus, by supplying drive current to a coil (34) and driving an electric motor part (20), magnetic attraction force (MF) can be generated that attempts to move a rotor (40) toward the other axial side. Due to the action of the magnetic attraction force (MF), the occurrence of rattling and deviation of the axial position of the rotor (40) can be eliminated. Consequently, a constant separation distance between the ring magnet (43) and Hall elements (Hu, Hv, and Hw) in the axial direction of the rotating shaft (41) can be maintained, and stable sensing can be performed while an increase in inertial mass is suppressed.

No. of Pages : 38 No. of Claims : 5

(12) PATENT APPLICATION PUBLICATION
(21) Application No.202514028821 A
(19) INDIA
(22) Date of filing of Application :26/03/2025
(43) Publication Date : 07/11/2025

(54) Title of the invention : ELECTROCHEMICAL APPARATUS AND ELECTRONIC APPARATUS

(51) International classification	:H01M0010052500, H01M0010058700, H01M0004020000, H01M0004360000, H01M0004620000
(31) Priority Document No	:202410383403.2
(32) Priority Date	:30/03/2024
(33) Name of priority country	:China
(86) International Application No	:NA
Filing Date	:NA
(87) International Publication No	: NA
(61) Patent of Addition to Application Number	:NA
Filing Date	:NA
(62) Divisional to Application Number	:NA
Filing Date	:NA

(71)**Name of Applicant :**
1)Ningde Amperex Technology Limited
Address of Applicant :No.1 Xingang Road, Zhangwan Town, Jiaocheng District, Ningde City, Fujian Province, China, 352100 China
(72)**Name of Inventor :**
1)Junfei LIU
2)Shuang YANG
3)Ben WANG
4)Disheng LAN

(57) Abstract :
This application provides an electrochemical apparatus and an electronic apparatus, including an electrode assembly. The electrode assembly includes a positive electrode plate, a negative electrode plate, and a separator. The positive electrode plate includes a positive electrode current collector, a first positive electrode active material layer, and a second positive electrode active material layer. The negative electrode plate includes a negative electrode current collector, a first negative electrode active material layer, and a second negative electrode active material layer. The electrode assembly includes a flat region and a bent region. The negative electrode plate includes a first bent section and a second bent section. The positive electrode plate includes a third bent section. The first bent section, the third bent section, and the second bent section are sequentially disposed away from a winding center. The electrode assembly satisfies a relation:$0.850 \leq (N_2/P_2)/(N_1/P_1) \leq 0.99$, where N1 represents a capacity per unit area of the second negative electrode active material layer in the first bent section; P1 represents a capacity per unit area of the first positive electrode active material layer in the third bent section; N2 represents a capacity per unit area of the first negative electrode active material layer in the second bent section; and P2 represents a capacity per unit area of the second positive electrode active material layer in the third bent section. [To be published with FIG.1]

No. of Pages : 47 No. of Claims : 12

(12) PATENT APPLICATION PUBLICATION
(21) Application No.202514028827 A
(19) INDIA
(22) Date of filing of Application :26/03/2025
(43) Publication Date : 07/11/2025

(54) Title of the invention : COVER MEMBER ATTACHMENT STRUCTURE

(51) International classification	:B60R0007040000, F25D0025020000, C03C0021000000, H01F0027300000, H02J0050120000	(71)**Name of Applicant :** **1)TOYOTA JIDOSHA KABUSHIKI KAISHA** Address of Applicant :1, Toyota-cho, Toyota-shi, Aichi-ken 471-8571, Japan Japan (72)**Name of Inventor :** **1)NAGATA, Takatsugu**
(31) Priority Document No	:2024-062682	
(32) Priority Date	:09/04/2024	
(33) Name of priority country	:Japan	
(86) International Application No	:NA	
Filing Date	:NA	
(87) International Publication No	: NA	
(61) Patent of Addition to Application Number	:NA	
Filing Date	:NA	
(62) Divisional to Application Number	:NA	
Filing Date	:NA	

(57) Abstract :
A cover member attachment structure (10) includes; a support member (20) that is fixed to a roof member 5 (18) of a vehicle (12); a console member (40); and a cover member (30) that is disposed so as to be adjacent to the console member (40) in a vehicle front-rear direction, such that a first end portion (30A) of the cover member (30) in the vehicle front-rear direction is supported by a glass member (14) and a second end portion (30B) of the cover member (30) in the vehicle front-rear 10 direction is attached to the support member (20), the cover member (30) housing a housed object between the cover member (30) and the glass member (14). In the attachment structure (10), an elastic member (16) is interposed between the second end portion (30B) of the cover member (30) and the support member (20). 15 To be Published with FIG. 3 15

No. of Pages : 21 No. of Claims : 7

(12) PATENT APPLICATION PUBLICATION
(21) Application No.202514028990 A
(19) INDIA
(22) Date of filing of Application :27/03/2025
(43) Publication Date : 07/11/2025

(54) Title of the invention : NON-CONTACT PROCESSING OF FORMED CARTRIDGES

(51) International classification	:A61J0001060000, F03D0013400000, A61M0005200000, A61J0001160000, A01G0009029000
(31) Priority Document No	:24170198.6
(32) Priority Date	:15/04/2024
(33) Name of priority country	:EPO
(86) International Application No	:NA
Filing Date	:NA
(87) International Publication No	: NA
(61) Patent of Addition to Application Number	:NA
Filing Date	:NA
(62) Divisional to Application Number	:NA
Filing Date	:NA

(71)**Name of Applicant :**
1)SCHOTT Pharma AG & Co. KGaA
Address of Applicant :Hattenbergstraße 10, 55122 Mainz (DE) Germany
(72)**Name of Inventor :**
1)KROHER, Rüdiger

(57) Abstract :
The present invention relates to a method for producing a plurality of sterilized cartridges 100, the method comprising the steps of: a. forming the cartridges 100 using a heat, each cartridge 100 comprising: - an elongated cylindrical body 101 in the form of a tube having an inner diameter d2, an outer diameter d1, a longitudinal axis Lcartridge and a total length l1, wherein the elongated cylindrical body 101 comprises a bottom region 106 with a circular opening 107, the bottom region 106 comprising a bulbous thickening 108 of the material forming the tubular elongated cylindrical body 101 and having an inner diameter d4 and an outer diameter d3 ; - a top region 102 that comprises a shoulder 103, a neck 104 and a collar 105; b. inserting the plurality of formed cartridges 100 into a holding structure 200 adapted and arranged for holding the plurality of the formed cartridges 100, wherein the holding structure 200 comprises: i) a base plate 201; ii) a plurality of receptacles 202 arranged on top of the base plate 201; - each receptacle 202 having a longitudinal axis Lreceptable that runs in a longi-tudinal direction through the centre of the receptacle 202 and comprising an upper end 203 into which the formed cartridge 100 is inserted, a bottom end 204 at which the receptacle 202 is connected to the base plate 201, a cir-cumferentially formed side wall 205 extending in a longitudinal direction from the upper end 203 to the bottom end 204, and a positioning means 206 located in the centre of the bottom end 204 of the receptacle 202; - each receptacle 202 being adapted and arranged to accommodate a formed cartridge 100 such that -- at least a part of the elongated body 101 having the length l1' is insert-ed into the receptacle 202 and the remaining part of the elongated cy-lindrical body 101 having the length l1-l1' protrudes out of the recepta-cle 202; -- the positioning means 206 protrudes into the circular opening 107 at the bottom region 106 of the formed cartridge 100, thereby ensuring that the formed cartridge 100 is tilt by an angel a of not more than 10 degrees, the tilting angle a being the angle that is formed between longitudinal axis Lreceptacle and longitudinal axis Lcartridge of the formed cartridge 100 accommodated in the receptacle 202; c. transporting the holding structure 200 from a first location 401 to a further location 402; d. removing the formed containers 100 from the holding structure 200 at the further loca-tion 402; e. sterilising the formed containers 100; wherein - l1' is at least 10 to 90 % of the total length l1; - l1-l1' is at least 10 to 90 % of the total length l1. The invention also relates to a holding structure adapted and arranged for holding a plurality of formed cartridges, to a plurality of holding structures and to the use of a holding structure or of a plurality of holding structures for the transportation of cartridges from a process station in which the cartridges are formed by head to a process station in which the formed cartridges are sterilized.

No. of Pages : 45 No. of Claims : 15

(12) PATENT APPLICATION PUBLICATION
(21) Application No.202514024628 A
(19) INDIA
(22) Date of filing of Application :19/03/2025
(43) Publication Date : 07/11/2025

(54) Title of the invention : OPTICAL IMAGING LENS ASSEMBLY

(51) International classification :G02B13/00
(31) Priority Document No :202410400263.5
(32) Priority Date :03/04/2024
(33) Name of priority country :China
(86) International Application No :NA
Filing Date :NA
(87) International Publication No : NA
(61) Patent of Addition to Application Number :NA
Filing Date :NA
(62) Divisional to Application Number :NA
Filing Date :NA

(71)**Name of Applicant :**
1)ZHEJIANG SUNNY OPTICS CO., LTD.
Address of Applicant :No. 66-69 Fengle Road, Yangming Street, Yuyao City, Zhejiang 315000, China. Yuyao China
(72)**Name of Inventor :**
1)QI, Yu
2)XU, Wuchao
3)DAI, Fujian

(57) Abstract :
The present application discloses an optical imaging lens assembly, comprising an optical lens group and a spacing element group, wherein the optical lens group comprises, in order from an object side to an image plane along an optical axis: a first lens group, comprising a first lens having a refractive power; a second lens group having a positive refractive power, comprising a second lens having a positive refractive power, a third lens having a negative refractive power, a fourth lens having a negative refractive power, a fifth lens having a refractive power and a sixth lens having a positive refractive power; and a third lens group, comprising a seventh lens having a negative refractive power; the spacing element group comprises a fourth spacing element being in contact with an image side surface of the fourth lens and a fifth spacing element being in contact with an image side surface of the fifth lens; an effective focal length F2 of the second lens group and a combined focal length f45 of the fourth lens and the fifth lens satisfy: -7.5≤f45/F2-4.5; and a center thickness CT5 of the fifth lens on the optical axis, an air spacing T56 between the fifth lens and the sixth lens on the optical axis and a spacing EP45 between the fourth spacing element and the fifth spacing element along the optical axis satisfy: 1.0(CT5+T56)/EP453.5.

No. of Pages : 74 No. of Claims : 13

(12) PATENT APPLICATION PUBLICATION
(21) Application No.202514024647 A
(19) INDIA
(22) Date of filing of Application :19/03/2025
(43) Publication Date : 07/11/2025

(54) Title of the invention : PLUG-IN CONNECTOR FOR ELECTRICALLY CONNECTING TWO PRINTED CIRCUIT BOARDS

(51) International classification	:H01M0010040000, H01R0012730000, H01R0012700000, H01R0012720000, H01R0024600000	(71)**Name of Applicant :** **1)WEBASTO SE** Address of Applicant :Kraillinger Straße 5 82131 Stockdorf, Germany (DE) Germany
(31) Priority Document No	:102024203140.2	(72)**Name of Inventor :** **1)Fabian RIEDIGER**
(32) Priority Date	:05/04/2024	**2)Peter WITTICH**
(33) Name of priority country	:Germany	**3)Rainer STAUDE**
(86) International Application No	:NA	**4)Christian KNOP**
Filing Date	:NA	
(87) International Publication No	: NA	
(61) Patent of Addition to Application Number	:NA	
Filing Date	:NA	
(62) Divisional to Application Number	:NA	
Filing Date	:NA	

(57) Abstract :
A plug-in connector (30) for electrically connecting two printed circuit boards (10, 20) comprises a first connection part (40) and a second connection part (70), which mechanically interacts with the first connection part. The first connection part (40) comprises a first base section (50) and a first spring section (60). The first base section (50) has a first bottom wall (51) with a first lower surface (58), which spans a plane (XY), for attachment to a first printed circuit board (10), wherein the plane is defined by a first direction (X), in which the two printed circuit boards (10, 20) lie with their end faces opposite each other in the connected state, and a second direction (Y), which is perpendicular to the first direction, and wherein the first spring section (60) comprises two resiliently mounted first wall sections (64) lying opposite each other in the second direction (Y). The second connection part (70) comprises a second base section (80) and a second spring section (90). The second base section (80) has a second bottom wall (81) with a second lower surface (88) in the plane (XY) for attachment to a first printed circuit board (20). The first spring section (90) comprises two resiliently mounted second wall sections (94) lying opposite each other in the second direction (Y), which resiliently mounted second wall sections are configured to receive between them the second wall sections (94) along a third direction (Z), which lies perpendicular to the plane (XY). The first and the second wall sections (64, 94) each comprise a first and, respectively, a second contact section (65, 95), which contact sections are designed to interact when the two connection parts (40, 70) are connected by mutual latching. The first and the second contact sections (65, 95) exhibit a different extent (L6, L7) from each other in the first direction (X), so that contact defined by the contact sections (65, 95) in the latched-in state has play in the first direction (X). (Fig. 1)

No. of Pages : 34 No. of Claims : 17

(12) PATENT APPLICATION PUBLICATION
(21) Application No.202514024665 A
(19) INDIA
(22) Date of filing of Application :19/03/2025
(43) Publication Date : 07/11/2025

(54) Title of the invention : OIL LEVEL GAUGE SUPPORT STRUCTURE OF INTERNAL COMBUSTION ENGINE

(51) International classification	:G01F0023040000, F01M0011120000, F16H0057040000, F16C0009020000, F02F0007000000
(31) Priority Document No	:2024-062628
(32) Priority Date	:09/04/2024
(33) Name of priority country	:Japan
(86) International Application No	:NA
Filing Date	:NA
(87) International Publication No	: NA
(61) Patent of Addition to Application Number	:NA
Filing Date	:NA
(62) Divisional to Application Number	:NA
Filing Date	:NA

(71)**Name of Applicant :**
1)SUZUKI MOTOR CORPORATION
Address of Applicant :300 Takatsuka-cho, Chuo-ku, Hamamatsu-shi, Shizuoka 432-8611 Japan
(72)**Name of Inventor :**
1)TORII Yusuke

(57) Abstract :
[Object] Provided is an oil level gauge support structure of an internal combustion engine capable of improving the support rigidity of an oil level gauge to thereby suppress the vibration of the oil level gauge and suppress the generation of abnormal noise. [Solution] A chain case 5 attached to a cylinder block 2 has a chain case body 5A facing a front end of the cylinder block 2 and a side wall portion 5B bent in a crankshaft direction from both ends of a width direction of the chain case body 5A perpendicular to the crankshaft direction and fastened to a flange portion 2F, and the side wall portion 5B is provided with an oil level gauge insertion hole 11 through which an oil level gauge 10 is inserted into the engine 1. [Selected figure] Fig. 3

No. of Pages : 25 No. of Claims : 8

(12) PATENT APPLICATION PUBLICATION
(21) Application No.202411025459 A
(19) INDIA
(22) Date of filing of Application :28/03/2024
(43) Publication Date : 07/11/2025

(54) Title of the invention : AUTOMATED U-SHAPED CLAMP MANUFACTURING ASSISTIVE DEVICE

(51) International classification	:B08B0001000000, A01J0005003000, C01B0033035000, B64F0001220000, G01S0017931000	(71)**Name of Applicant :** **1)Chandigarh University** Address of Applicant :National Highway 95, Chandigarh-Ludhiana Highway, Mohali, Punjab 140413, India. Mohali Punjab India **2)Chandigarh University Technology Business Incubator**
(31) Priority Document No	:NA	(72)**Name of Inventor :**
(32) Priority Date	:NA	**1)Jayaram R**
(33) Name of priority country	:NA	
(86) International Application No	:NA	
Filing Date	:NA	
(87) International Publication No	: NA	
(61) Patent of Addition to Application Number	:NA	
Filing Date	:NA	
(62) Divisional to Application Number	:NA	
Filing Date	:NA	

(57) Abstract :
An automated U-shaped clamp manufacturing assistive device, comprising a body 1 positioned on a fixed surface by means of plurality of suction cups 2, a touch interactive display panel 3 provide input specifications regarding a user-desired U-shaped clamp, an artificial intelligence-based imaging unit 5 determines orientation of rods, a robotic arm 6 grip unevenly oriented rod in between a pair of motorized rollers 7 for straightening uneven rod, a LiDAR sensor determines length of rod, a telescopically operated link 8 for positioning a motorized cutter 9 on exceeded rod to cut rod as per user-specified length, and further positioned on an inverted U-shaped protrusion 14, and an inverted U-shaped mold 10 by means of a hydraulic actuator 11 for pressing rod for manufacturing U-shaped clamps.

No. of Pages : 16 No. of Claims : 3

(12) PATENT APPLICATION PUBLICATION
(19) INDIA
(22) Date of filing of Application :02/04/2025
(21) Application No.202514032582 A
(43) Publication Date : 07/11/2025

(54) Title of the invention : DISPLAY DEVICE

(51) International classification	:G09F0009300000, A47F0005025000, H04N0005655000, G02F0001133570, G02F0001133500
(31) Priority Document No	:10-2024-0045206
(32) Priority Date	:03/04/2024
(33) Name of priority country	:Republic of Korea
(86) International Application No	:NA
Filing Date	:NA
(87) International Publication No	: NA
(61) Patent of Addition to Application Number	:NA
Filing Date	:NA
(62) Divisional to Application Number	:NA
Filing Date	:NA

(71)**Name of Applicant :**
1)Samsung Display Co., LTD.
Address of Applicant :1, Samsung-ro, Giheung-gu, Yongin-si, Gyeonggi-do, 17113, Korea Republic of Korea
(72)**Name of Inventor :**
1)Young Jin CHO
2)Joong Soo MOON
3)Min Ku LEE
4)Seung Hee LEE
5)Eun Byul JO

(57) Abstract :
A display device (10) includes: a pad area (PA) in a non-display area (NDA) of a substrate (SUB); a first cluster pad (PD1) and a second cluster pad (PD2) in a pad area (PA); and routing lines on the substrate (SUB) and electrically connected from the display area (DA) to the first cluster pad (PD1) and the second cluster pad (PD2), wherein the routing lines include a first routing line (DRL1) extending to the first cluster pad (PD1) and a second routing line (DRL2) extending to the second cluster pad (PD2), the first routing line (DRL1) and the second routing line (DRL2) are adjacent, the first routing line (DRL1) includes a first middle portion (MTP1) extending in a second direction (DR2) crossing a first direction (DR1) that is a horizontal direction, and the second routing line (DRL2) includes a second middle portion (MTP2) adjacent to and parallel to the first middle portion (MTP1), and the first middle portion (MTP1) and the second middle portion (MTP2) are between the first cluster pad (PD1) and the second cluster pad (PD2).

No. of Pages : 76 No. of Claims : 25

(12) PATENT APPLICATION PUBLICATION
(19) INDIA
(22) Date of filing of Application :02/04/2025
(21) Application No.202514032584 A
(43) Publication Date : 07/11/2025

(54) Title of the invention : DISPLAY APPARATUS

(51) International classification	:H10K0059121000, H04N0021422000, G02B0027010000, H04N0021450000, G09G0003200000
(31) Priority Document No	:10-2024-0045510
(32) Priority Date	:03/04/2024
(33) Name of priority country	:Republic of Korea
(86) International Application No	:NA
Filing Date	:NA
(87) International Publication No	: NA
(61) Patent of Addition to Application Number	:NA
Filing Date	:NA
(62) Divisional to Application Number	:NA
Filing Date	:NA

(71)**Name of Applicant :**
1)Samsung Display Co., Ltd.
Address of Applicant :1, Samsung-ro, Giheung-gu, Yongin-si, Gyeonggi-do, 17113, Korea Republic of Korea
(72)**Name of Inventor :**
1)Soyoung Jang
2)Hansol Kim
3)Jaedu Noh
4)Youngjin Cho

(57) Abstract :
A display apparatus (10) includes a first pixel circuit (PC1) and a second pixel circuit (PC2) adjacent to each other in a first direction (x direction), and a first conductive layer (1200) over the first pixel circuit (PC1) and the second pixel circuit (PC2) and including a first data line (DL1), a second data line (DL2), a first voltage line overlapping the first pixel circuit (PC1), and a second voltage line overlapping the second pixel circuit (PC2), wherein each of the first pixel circuit (PC1) and the second pixel circuit (PC2) includes a first transistor (T1) including a first semiconductor pattern (1110) and a first gate electrode, a second transistor (T2) including a second semiconductor pattern (1120) and a second gate electrode, and a connection electrode (CTE) connecting the first transistor (T1) and the second transistor (T2) to each other, wherein the connection electrode of the second pixel circuit is arranged between the first voltage line and the first data line in a plan view.

No. of Pages : 60 No. of Claims : 20

(12) PATENT APPLICATION PUBLICATION
(19) INDIA
(22) Date of filing of Application :02/04/2025
(21) Application No.202514032606 A
(43) Publication Date : 07/11/2025

(54) Title of the invention : VEHICLE CONTROL SYSTEM

(51) International classification	:B60T7/12, G08G1/16, B60W10/18, B60T7/22, B60W40/02
(31) Priority Document No	:2024-063968
(32) Priority Date	:11/04/2024
(33) Name of priority country	:Japan
(86) International Application No	:NA
Filing Date	:NA
(87) International Publication No	: NA
(61) Patent of Addition to Application Number	:NA
Filing Date	:NA
(62) Divisional to Application Number	:NA
Filing Date	:NA

(71)**Name of Applicant :**
1)SUZUKI MOTOR CORPORATION
Address of Applicant :300 Takatsuka-cho, Chuo-ku, Hamamatsu-shi, Shizuoka 432-8611 Japan
(72)**Name of Inventor :**
1)SASADA Akihiro

(57) Abstract :
[Problem to be Solved] To provide a vehicle control system that can perform appropriate automatic brake control according to the environment surrounding a vehicle. [Solution] A vehicle control system 1 includes: a collision determination unit 21a that determines collision probability with a target obstacle present ahead of a vehicle; a brake control unit 21c that controls a braking force to perform automatic brake control according to the collision probability determined by the collision determination unit 21a, an environment determination unit 22 that determines the environment surrounding the vehicle, and an adjustment unit 23 that changes the type of the target obstacle in the automatic brake control based on the environment surrounding the vehicle determined by the environment determination unit 22. [Selected Drawing] Figure 2

No. of Pages : 36 No. of Claims : 9

(12) PATENT APPLICATION PUBLICATION
(21) Application No.202514029026 A
(19) INDIA
(22) Date of filing of Application :27/03/2025
(43) Publication Date : 07/11/2025

(54) Title of the invention : VEHICLE REAR BUMPER STRUCTURE

(51) International classification	:B60R0019180000, B60R0019480000, B60R0019020000, B60R0019240000, C08J0005040000
(31) Priority Document No	:2024-058582
(32) Priority Date	:01/04/2024
(33) Name of priority country	:Japan
(86) International Application No	:NA
Filing Date	:NA
(87) International Publication No	: NA
(61) Patent of Addition to Application Number	:NA
Filing Date	:NA
(62) Divisional to Application Number	:NA
Filing Date	:NA

(71)**Name of Applicant :**
1)SUZUKI MOTOR CORPORATION
Address of Applicant :300 Takatsuka-cho, Chuo-ku, Hamamatsu-shi, Shizuoka 432-8611, Japan Japan
(72)**Name of Inventor :**
1)Yuji TAKANO

(57) Abstract :
Provided is a vehicle rear bumper structure capable of protecting the reflector in the event of, for example, a minor rear-end collision. A vehicle rear bumper structure 100 includes a garnish member 112 to which a sonar 110 is attached, the garnish member 112 being installed below a 10 reflector 108 in a rear bumper 102. The garnish member 112 has a garnish design part 114 exposed from the rear bumper 102 as viewed from the rear of the vehicle, and a sonar attachment part 116 to which the sonar 110 is attached, the sonar attachment part 116 being located at a predetermined 15 location on the garnish design part 114. The rear end in the front and back directions relative to the vehicle of the garnish member 112 is located rearward, relative to the vehicle, of the rear end in the front and back directions relative to the vehicle of the reflector 108.

No. of Pages : 23 No. of Claims : 5

(12) PATENT APPLICATION PUBLICATION
(21) Application No.202514029027 A
(19) INDIA
(22) Date of filing of Application :27/03/2025
(43) Publication Date : 07/11/2025

(54) Title of the invention : METHOD, APPARATUS AND COMPUTER PROGRAM

(51) International classification	:H04L0005000000, H02S0050100000, G06F0011340000, G06F0011300000, A45F0005000000
(31) Priority Document No	:2404859.7
(32) Priority Date	:05/04/2024
(33) Name of priority country	:U.K.
(86) International Application No	:NA
Filing Date	:NA
(87) International Publication No	: NA
(61) Patent of Addition to Application Number	:NA
Filing Date	:NA
(62) Divisional to Application Number	:NA
Filing Date	:NA

(71)**Name of Applicant :**
1)NOKIA TECHNOLOGIES OY
Address of Applicant :Karakaari 7, FI – 02610 Espoo, FINLAND Finland
(72)**Name of Inventor :**
1)ANDREA BONFANTE
2)TIMO KOSKELA
3)AMAANAT ALI
4)KEETH SALIYA JAYASINGHE LADDU

(57) Abstract :
ABSTRACT A user equipment comprising: an inference module configured to predict at least one reference signal resource using a first set of input reference signal resources as an input of the inference module; a performance monitoring module configured for performance monitoring of the inference module, wherein the performance monitoring uses a second set of reference signals as input to the performance monitoring module; a performance monitoring failure detection module configured to detect failure of the performance monitoring module.

No. of Pages : 40 No. of Claims : 18

(12) PATENT APPLICATION PUBLICATION
(21) Application No.202514029030 A
(19) INDIA
(22) Date of filing of Application :27/03/2025
(43) Publication Date : 07/11/2025

(54) Title of the invention : SECONDARY BATTERY AND ELECTRONIC APPARATUS

(51) International classification	:H01M0004620000, H01M0010052500, H01M0004020000, H01M0004360000, H01M0004380000
(31) Priority Document No	:202410383513.9
(32) Priority Date	:31/03/2024
(33) Name of priority country	:China
(86) International Application No	:NA
Filing Date	:NA
(87) International Publication No	: NA
(61) Patent of Addition to Application Number	:NA
Filing Date	:NA
(62) Divisional to Application Number	:NA
Filing Date	:NA

(71)**Name of Applicant :**
1)Ningde Amperex Technology Limited
Address of Applicant :No.1 Xingang Road, Zhangwan Town, Jiaocheng District, Ningde City, Fujian Province, China, 352100 China
(72)**Name of Inventor :**
1)Yang LI
2)Wenchen REN

(57) Abstract :
A secondary battery including a negative electrode plate. The negative electrode plate includes a negative electrode current collector and a negative electrode material layer disposed on at least one surface of the negative electrode current collector. The negative electrode material layer includes a negative electrode active material, a binder, and a conductive agent. The negative electrode active material includes a carbon material and silicon-carbon composite particles. Based on a mass of the negative electrode material layer, a mass percentage of silicon element is 4.4% to 10.5%, and a mass percentage of carbon element is 85% to 90%. A powder conductivity of the negative electrode material layer is 8 S/m to 15 S/m. (To be published with FIG. 1)

No. of Pages : 57 No. of Claims : 11

(12) PATENT APPLICATION PUBLICATION
(19) INDIA
(22) Date of filing of Application :27/03/2025
(21) Application No.202514029058 A
(43) Publication Date : 07/11/2025

(54) Title of the invention : VEHICLE

(51) International classification	:B60K0001000000, B62D0025080000, B62D0021150000, H04N0007180000, H02K0005220000
(31) Priority Document No	:2024-060615
(32) Priority Date	:04/04/2024
(33) Name of priority country	:Japan
(86) International Application No	:NA
Filing Date	:NA
(87) International Publication No	: NA
(61) Patent of Addition to Application Number	:NA
Filing Date	:NA
(62) Divisional to Application Number	:NA
Filing Date	:NA

(71)**Name of Applicant :**
1)HONDA MOTOR CO., LTD.
Address of Applicant :1-1, Minami-Aoyama 2-chome, Minato-ku, Tokyo 107-8556, Japan Japan
(72)**Name of Inventor :**
1)SUGITATE, Kenta

(57) Abstract :
In a vehicle (10), a front side motor room (24) is disposed more frontward than a passenger room (22) in a traveling direction of the vehicle (10). The front side motor room (24) accommodates a motor unit (14). A slot (44) that retains a mobile battery (12) is disposed in the front side motor room (24). fig. 3

No. of Pages : 42 No. of Claims : 14

(12) PATENT APPLICATION PUBLICATION
(21) Application No.202514029076 A
(19) INDIA
(22) Date of filing of Application :27/03/2025
(43) Publication Date : 07/11/2025

(54) Title of the invention : BATTERY MODULE FOR AN EXTRATERRESTRIAL VEHICLE

(51) International classification	:H01M0050211000, H01M0010613000, H01M0050249000, H01M0010625000, H01M0050209000
(31) Priority Document No	:24168180.8
(32) Priority Date	:03/04/2024
(33) Name of priority country	:EUROPEAN UNION
(86) International Application No	:NA
Filing Date	:NA
(87) International Publication No	: NA
(61) Patent of Addition to Application Number	:NA
Filing Date	:NA
(62) Divisional to Application Number	:NA
Filing Date	:NA

(71)**Name of Applicant :**
1)VENTURI
Address of Applicant :GILDO PASTOR CENTER, 7 RUE DU GABIAN 98000, MONACO Monaco
(72)**Name of Inventor :**
1)BLONDEL LOUIS-MARIE
2)MICHELIN JEAN
3)JOHANNI MICHAEL

(57) Abstract :
The invention relates to a battery module (2a) for an extraterrestrial vehicle, comprising a plurality of accumulator cells (14) mechanically assembled together and electrically connected together, each accumulator cell comprising a central body, a plurality of accumulators disposed in pairs on either side of the central body, two busbars, two covers (32) mounted against the busbars, and two casings fitted against the opposite lateral faces of the accumulators, a central mechanical support plate (38a) mounted against the covers of the accumulator cells on the side of a lateral assembly face of the battery module and comprising heating systems (56) on the side opposite the covers, and an external thermal protection plate (6a) mounted against the covers on the side opposite the lateral assembly face of the battery module, delimiting with them at least one internal ejecta containment volume (48) which opens to the outside via particle filters (54).

No. of Pages : 23 No. of Claims : 11

(12) PATENT APPLICATION PUBLICATION
(21) Application No.202514027609 A
(19) INDIA
(22) Date of filing of Application :25/03/2025
(43) Publication Date : 07/11/2025

(54) Title of the invention : EVENT-TRIGGERED REPORTING

(51) International classification	:H04W0024100000, H04L0067564000, A61N0001050000, G11B0027110000, H04W0036200000
(31) Priority Document No	:2404777.1
(32) Priority Date	:04/04/2024
(33) Name of priority country	:U.K.
(86) International Application No	:NA
Filing Date	:NA
(87) International Publication No	: NA
(61) Patent of Addition to Application Number	:NA
Filing Date	:NA
(62) Divisional to Application Number	:NA
Filing Date	:NA

(71)**Name of Applicant :**
1)Nokia Technologies Oy
Address of Applicant :Karakaari 7, FI – 02610 Espoo, FINLAND Finland
(72)**Name of Inventor :**
1)TIMO KOSKELA
2)SAMI-JUKKA HAKOLA
3)JUHA PEKKA KARJALAINEN
4)SAMANTHA CAPORAL DEL BARRIO

(57) Abstract :
Example embodiments relate to event-triggered reporting. For example, a method may comprise: obtaining a first priority level associated with a first event-triggered channel state information, CSI, report for being transmitted to a network node; and determining whether to transmit or not, to the network node at a time occasion, the first event-triggered CSI report, or a message associated with the first event-triggered CSI report, based at least in part on the first priority level.

No. of Pages : 51 No. of Claims : 21

(12) PATENT APPLICATION PUBLICATION
(21) Application No.202514027654 A
(19) INDIA
(22) Date of filing of Application :25/03/2025
(43) Publication Date : 07/11/2025

(54) Title of the invention : VEHICLE REAR STRUCTURE

(51) International classification	:B62D0025080000, B62D0043040000, B62D0025200000, B62D0043100000, H01L0029400000
(31) Priority Document No	:2024-060024
(32) Priority Date	:03/04/2024
(33) Name of priority country	:Japan
(86) International Application No	:NA
Filing Date	:NA
(87) International Publication No	: NA
(61) Patent of Addition to Application Number	:NA
Filing Date	:NA
(62) Divisional to Application Number	:NA
Filing Date	:NA

(71)**Name of Applicant :**
1)SUZUKI MOTOR CORPORATION
Address of Applicant :300 Takatsuka-cho, Chuo-ku, Hamamatsu-shi, Shizuoka 432-8611 Japan
(72)**Name of Inventor :**
1)YAMAZAKI Shota

(57) Abstract :
[Problem to be Solved] To improve workability of a spare tire being put into, and being taken out from, a tire accommodating portion. [Solution] A vehicle rear structure is provided with a tire accommodating portion 12 accommodating a spare tire in a floor portion. The tire accommodating portion 12 is provided with a tire installation member 20 that protrudes upward from a bottom portion, the spare tire being attachable to and detachable from the tire installation portion, the tire accommodating portion 12 is provided with a support bracket 30 including a joined surface portion 32 that is joined to the bottom portion located on a rear side of the tire installation member, both outer portions of the joined surface portion 32 are located further upward than an intermediate portion 32c, and the tire installation member 20 is configured such that the spare tire is installed in the tire installation member 20 in a state in which an outer peripheral surface of the spare tire abuts both the outer portions. [Selected Drawing] Figure 1

No. of Pages : 52 No. of Claims : 8

(12) PATENT APPLICATION PUBLICATION
(21) Application No.202514027657 A
(19) INDIA
(22) Date of filing of Application :25/03/2025
(43) Publication Date : 07/11/2025

(54) Title of the invention : REAR STRUCTURE OF ELECTRIC VEHICLE

(51) International classification	:B62D0025080000, B62D0025200000, B62D0021150000, B62D0021020000, B62D0043100000
(31) Priority Document No	:2024-060025
(32) Priority Date	:03/04/2024
(33) Name of priority country	:Japan
(86) International Application No	:NA
Filing Date	:NA
(87) International Publication No	: NA
(61) Patent of Addition to Application Number	:NA
Filing Date	:NA
(62) Divisional to Application Number	:NA
Filing Date	:NA

(71)**Name of Applicant :**
1)SUZUKI MOTOR CORPORATION
Address of Applicant :300 Takatsuka-cho, Chuo-ku, Hamamatsu-shi, Shizuoka 432-8611 Japan
(72)**Name of Inventor :**
1)YAMAZAKI Shota

(57) Abstract :
[Problem to be Solved] To enhance rigidity of a floor part used for installing a spare tire and to enhance attachment rigidity of the spare tire. [Solution] A rear structure of an electric vehicle includes a holding bracket 20 that is provided in a floor part disposed on a vehicle rearward side of a battery pack and holds a spare tire. The holding bracket 20 includes: a holding part 21 holding a central part of the spare tire; a front side wall part 22 extending from the holding part 21 toward a forward side, while a front end thereof is joined to the floor part; outer side wall parts 23 and 24 extending from the holding part 21 toward both of two outer sides, while side ends thereof are joined to the floor part; and reinforcement wall parts 25 and 26 connecting the front side wall part 22 to the outer side wall parts 23 and 24 on either side thereof. [Selected Drawing] Figure 3

No. of Pages : 41 No. of Claims : 7

(12) PATENT APPLICATION PUBLICATION
(21) Application No.202514027688 A
(19) INDIA
(22) Date of filing of Application :25/03/2025
(43) Publication Date : 07/11/2025

(54) Title of the invention : Insulation device for a battery compartment, battery compartment, electrical apparatus and associated electrical circuit breaker

(51) International classification	:H01M0010040000, H01M0010655600, H01M0050244000, H01M0050247000, H01L0029780000
(31) Priority Document No	:2403189
(32) Priority Date	:28/03/2024
(33) Name of priority country	:France
(86) International Application No	:NA
Filing Date	:NA
(87) International Publication No	: NA
(61) Patent of Addition to Application Number	:NA
Filing Date	:NA
(62) Divisional to Application Number	:NA
Filing Date	:NA

(71)**Name of Applicant :**
1)SCHNEIDER ELECTRIC INDUSTRIES SAS
Address of Applicant :35 rue Joseph Monier, 92500 RUEIL-MALMAISON, FRANCE France
(72)**Name of Inventor :**
1)PRIEUR Patrick
2)CANCELA Denis

(57) Abstract :
ABSTRACT Insulation device for a battery compartment, battery compartment, electrical apparatus and associated electrical circuit breaker This insulation device (250) for a battery compartment (200) comprises a ribbon (260), which extends according to a longitudinal axis (A260) and which comprises a first insulation portion (261), which is electrically insulating, which is continuous along the longitudinal axis (A260), and which is configured to be interposed between a contact terminal (214) and a terminal of an electrical battery (212) in order to prevent the passage of current between the contact terminal and the terminal. The ribbon also comprises a second insulation portion (262) and a conduction portion (263), which is configured not to prevent the passage of current between the terminal and the contact terminal when the conduction portion (263) is interposed between the contact terminal and the terminal. The conduction portion is interposed, according to the longitudinal axis, between the first insulation portion (261) and the second insulation portion (262). Figure for the abstract: Figure 5

No. of Pages : 26 No. of Claims : 12

(12) PATENT APPLICATION PUBLICATION
(21) Application No.202514035097 A
(19) INDIA
(22) Date of filing of Application :10/04/2025
(43) Publication Date : 07/11/2025

(54) Title of the invention : DISPLAY DEVICE AND METHOD OF MANUFACTURING THE SAME

(51) International classification	:H10K0071000000, C09J0007380000, B21K0025000000, H10K0102000000, H10K0059350000
(31) Priority Document No	:10-2024-0049304
(32) Priority Date	:12/04/2024
(33) Name of priority country	:Republic of Korea
(86) International Application No	:NA
Filing Date	:NA
(87) International Publication No	: NA
(61) Patent of Addition to Application Number	:NA
Filing Date	:NA
(62) Divisional to Application Number	:NA
Filing Date	:NA

(71)**Name of Applicant :**
1)Samsung Display Co., LTD.
Address of Applicant :1, Samsung-ro, Giheung-gu, Yongin-si, Gyeonggi-do, 17113, Korea Republic of Korea
(72)**Name of Inventor :**
1)JONGHYUN YUN
2)HYUNWOO KANG
3)DAE-GI KWEON
4)JUNYOUNG KIM
5)Jina Park
6)YONGHO YANG
7)Kyung-Min Lee
8)CHANG-HO JEONG

(57) Abstract :
A display device (DDa) includes a substrate (SUB) including an auxiliary pixel 5 area (SPX1, SPX2, SPX3, SPX4) , and a transmitting area (TA) spaced from the auxiliary pixel area (SPX1, SPX2, SPX3, SPX4), a driving element (TR) above the substrate (SUB), an insulating layer above the driving element (TR), an electrode in the auxiliary pixel area (SPX1, SPX2, SPX3, SPX4), above the insulating layer, and electrically connected to the driving element (TR), and a pixel-defining layer (PDL) above the 10 insulating layer, defining an opening (OP) in the auxiliary pixel area (SPX1, SPX2, SPX3, SPX4), defining a transmitting part (TU) in the transmitting area (TA), and defining a second cutout portion (COF2) spaced from the auxiliary pixel area (SPX1, SPX2, SPX3, SPX4) and the transmitting area (TA) in plan view.

No. of Pages : 75 No. of Claims : 29

(12) PATENT APPLICATION PUBLICATION
(21) Application No.202514035124 A
(19) INDIA
(22) Date of filing of Application :10/04/2025
(43) Publication Date : 07/11/2025

(54) Title of the invention : FRONT STRUCTURE OF VEHICLE AND METHOD FOR ASSEMBLING FRONT STRUCTURE OF VEHICLE

(51) International classification	:B62D0025080000, A61B0005000000, G01D0005347000, G03G0021160000, A61B0008080000
(31) Priority Document No	:2024-063992
(32) Priority Date	:11/04/2024
(33) Name of priority country	:Japan
(86) International Application No	:NA
Filing Date	:NA
(87) International Publication No	: NA
(61) Patent of Addition to Application Number	:NA
Filing Date	:NA
(62) Divisional to Application Number	:NA
Filing Date	:NA

(71)**Name of Applicant :**
1)TOYODA GOSEI CO., LTD.
Address of Applicant :1 Haruhinagahata, Kiyosu-shi, Aichi-ken, Japan 452-8564 Japan
(72)**Name of Inventor :**
1)Tomohiro KAJITANI
2)Jun YAMAGUCHI
3)Takaki ITATSU
4)Hiroshi TAKAKURA

(57) Abstract :
A front structure of a vehicle includes a pair of headlamps each of which having a second inclined surface, an exterior member having a first inclined surface, and a support member. The support member includes: a body portion to which the exterior member is attached, a pair of attachment portions that are connected to both ends of the body portion in the vehicle width direction and to which the headlamps are attached, and a fastening portion that fastens the attachment portions to the body portion at a position where the first and second inclined surfaces are in contact with each other. The support member allows a position change of the attachment portions with respect to the body portion in the vehicle width direction in a state where the body portion and the attachment portions are not fastened by the fastening portion, and restricts the position change in a different direction.

No. of Pages : 33 No. of Claims : 5

(12) PATENT APPLICATION PUBLICATION
(19) INDIA
(22) Date of filing of Application :10/04/2025
(21) Application No.202514035231 A
(43) Publication Date : 07/11/2025

(54) Title of the invention : METHOD AND SYSTEM FOR CORRECTING ACCELERATOR PEDAL DEMAND TORQUE OF VEHICLE

(51) International classification	:B60L0015200000, B60W0030180000, F02D0041100000, F02D0031000000, B60L0007180000
(31) Priority Document No	:202410439637.4
(32) Priority Date	:11/04/2024
(33) Name of priority country	:China
(86) International Application No	:NA
Filing Date	:NA
(87) International Publication No	: NA
(61) Patent of Addition to Application Number	:NA
Filing Date	:NA
(62) Divisional to Application Number	:NA
Filing Date	:NA

(71)**Name of Applicant :**
1)BOSCH POWERTRAIN SYSTEMS CO. LTD.
Address of Applicant :17 Xinhua Road New District, Wuxi, Jiangsu, 214028, China China
(72)**Name of Inventor :**
1)WANG, Huarui

(57) Abstract :
The present subject matter relates to a method for correcting accelerator pedal 5 demand torque of a vehicle, comprising: sensing an accelerator pedal opening degree, an engine rotational speed and vehicle gear information with a sensor unit (101) of the vehicle; determining, based on the vehicle gear information, a corresponding accelerator pedal demand torque map from a plurality of pre-stored accelerator pedal demand torque maps based on vehicle gears; obtaining, based on 10 the accelerator pedal opening degree and the engine rotational speed, the accelerator pedal demand torque based on the vehicle gears from the corresponding accelerator pedal demand torque map. The present subject matter also relates to a method for further correcting the accelerator pedal demand torque based on a vehicle weight, a slope and an ambient pressure and a correction system involving the 15 implementation of the method. To be Published with Figure 1

No. of Pages : 30 No. of Claims : 15

(12) PATENT APPLICATION PUBLICATION
(21) Application No.202514035236 A
(19) INDIA
(22) Date of filing of Application :10/04/2025
(43) Publication Date : 07/11/2025

(54) Title of the invention : METHODS AND SYSTEMS FOR MULTI-FORMAT MEDIA PROCESSING

(51) International classification	:G06F0009500000, G06F0009540000, H04N0021462000, H04N0021466000, H04N0021258000
(31) Priority Document No	:63/633,095
(32) Priority Date	:12/04/2024
(33) Name of priority country	:U.S.A.
(86) International Application No	:NA
Filing Date	:NA
(87) International Publication No	: NA
(61) Patent of Addition to Application Number	:NA
Filing Date	:NA
(62) Divisional to Application Number	:NA
Filing Date	:NA

(71)**Name of Applicant :**
1)TVU NETWORKS CORPORATION
Address of Applicant :20370 Town Center Lane, Suite 100 Cupertino, California 95014, United States of America U.S.A.
(72)**Name of Inventor :**
1)SHEN, Paul
2)XU, Pu
3)CROSSON, James David

(57) Abstract :
Methods and systems for media processing are provided which are capable 5 of accepting any media input and converting the media input for one or more media outputs. A plurality of video sources are provided, each of which produce a corresponding video stream. A microservice server is provided which comprises microservices adapted to at least one of decode, encode, scale, route, and transmit the corresponding video streams. A plurality of computational resources available 10 for use by the microservices are provided. A resource management subsystem is provided for orchestrating the microservices according to project parameters of one or more media projects, allocating and coordinating the plurality of the computational resources required by the microservices for the one or more media projects, and outputting corresponding media processed by the microservices for 15 the one or more media projects. 20 18

No. of Pages : 23 No. of Claims : 16

(12) PATENT APPLICATION PUBLICATION
(21) Application No.202514032629 A
(19) INDIA
(22) Date of filing of Application :02/04/2025
(43) Publication Date : 07/11/2025

(54) Title of the invention : AN INTERFACE CIRCUIT USING MIRRORED CURRENT FEEDBACK TO REDUCE INPUT IMPEDANCE

(51) International classification	:G06F0011200000, F21Y0115100000, F04C0018356000, A61B0005145500, H03F0003387000
(31) Priority Document No	:63/633,320
(32) Priority Date	:12/04/2024
(33) Name of priority country	:U.S.A.
(86) International Application No	:NA
Filing Date	:NA
(87) International Publication No	: NA
(61) Patent of Addition to Application Number	:NA
Filing Date	:NA
(62) Divisional to Application Number	:NA
Filing Date	:NA

(71)**Name of Applicant :**
1)POWER INTEGRATIONS, INC.
Address of Applicant :5245 Hellyer Avenue, San Jose, CA 95138, USA U.S.A.
(72)**Name of Inventor :**
1)Takayasu Sato

(57) Abstract :
An interface circuit using mirrored current feedback to reduce input impedance is disclosed herein. According to the teachings herein, the interface circuit includes a current mirror and an input circuit path. Shunt feedback via a return circuit path provides a mirrored current to an interface input thereby reducing an input impedance of the interface circuit. By virtue of shunt feedback, the input impedance of the interface circuit is reduced relative to the impedance of the input circuit path. In this manner, input impedance of the interface circuit may be reduced without changing the impedance of the input circuit path.

No. of Pages : 38 No. of Claims : 20

(12) PATENT APPLICATION PUBLICATION
(21) Application No.202514032635 A
(19) INDIA
(22) Date of filing of Application :02/04/2025
(43) Publication Date : 07/11/2025

(54) Title of the invention : ENCODER AND ENCODER SYSTEM

(51) International classification	:B01L0003000000, G01D0005347000, G01D0005140000, G03G0015000000, B01L0009000000
(31) Priority Document No	:63/573475
(32) Priority Date	:03/04/2024
(33) Name of priority country	:U.S.A.
(86) International Application No	:NA
Filing Date	:NA
(87) International Publication No	: NA
(61) Patent of Addition to Application Number	:NA
Filing Date	:NA
(62) Divisional to Application Number	:NA
Filing Date	:NA

(71)**Name of Applicant :**
1)KABUSHIKI KAISHA YASKAWA DENKI
Address of Applicant :2-1, Kurosaki-Shiroishi, Yahatanishi-ku, Kitakyushu-shi, Fukuoka 806-0004 Japan Japan
(72)**Name of Inventor :**
1)FURUKAWA, Daisuke
2)TAKAHASHI, Masanao
3)MATSUTANI, Yasuhiro
4)TAKADA, Hiroshi

(57) Abstract :
An encoder includes: an optical first detection unit for detecting rotation of a rotation shaft; an optical second detection unit for detecting rotation of the rotation shaft; a comparison unit for comparing a detection result from the first detection unit and a detection result from the second detection unit; and a data transmission unit for transmitting data including at least the detection result from the first detection unit and a comparison result from the comparison unit.

No. of Pages : 69 No. of Claims : 16

(12) PATENT APPLICATION PUBLICATION
(19) INDIA
(22) Date of filing of Application :02/04/2025
(21) Application No.202514032636 A
(43) Publication Date : 07/11/2025

(54) Title of the invention : PROTECTOR AND PROTECTOR-EQUIPPED WIRE HARNESS

(51) International classification	:H02G0003040000, B60R0016020000, H02G0011000000, H01B0007000000, A62B0018080000
(31) Priority Document No	:2024-064550
(32) Priority Date	:12/04/2024
(33) Name of priority country	:Japan
(86) International Application No	:NA
Filing Date	:NA
(87) International Publication No	: NA
(61) Patent of Addition to Application Number	:NA
Filing Date	:NA
(62) Divisional to Application Number	:NA
Filing Date	:NA

(71)**Name of Applicant :**
1)Sumitomo Wiring Systems, Ltd.
Address of Applicant :1 - 14, Nishisuehiro-cho, Yokkaichi-shi, Mie 5108503, Japan Japan
2)SUZUKI MOTOR CORPORATION
(72)**Name of Inventor :**
1)SUZUKI, Masao
2)HATTORI, Hideki
3)EHARA, Naoya
4)MOCHIZUKI, Tamaki
5)IKEYA, Toshinori
6)KOORI, Yashinori
7)TAKAYAMA, Rui

(57) Abstract :
An object is to downsize a protector while a cutting margin of a tie band is protected. A protector includes: a protector body 32 including a fixing plate part 40 disposed along a wire harness; a head part housing part 41 including a housing space 45 of housing a head part 62 of a tie band 60; and a cutting margin protection part 50 protecting a cutting margin 66a of a band part 66 of the tie band. The head part housing part includes an inner opening 43h opened to an inner side of the fixing plate part and an outer opening 44h opened to an outer side of the fixing plate part, and positions the head part in the housing space in a thickness direction of the fixing plate part. The cutting margin protection part 50 includes a pair of protection walls 52 extending to the outer side of the fixing plate part from the outer opening. (Selected Figure: Fig. 5)

No. of Pages : 30 No. of Claims : 8

(12) PATENT APPLICATION PUBLICATION
(19) INDIA
(22) Date of filing of Application :02/04/2025
(21) Application No.202514032660 A
(43) Publication Date : 07/11/2025

(54) Title of the invention : DISPLAY DEVICE

(51) International classification	:H10K0059131000, H10K0059121000, G09G0003000000, H10K0059124000, G09G0003360000
(31) Priority Document No	:10-2024-0045215
(32) Priority Date	:03/04/2024
(33) Name of priority country	:Republic of Korea
(86) International Application No	:NA
Filing Date	:NA
(87) International Publication No	: NA
(61) Patent of Addition to Application Number	:NA
Filing Date	:NA
(62) Divisional to Application Number	:NA
Filing Date	:NA

(71)**Name of Applicant :**
1)SAMSUNG DISPLAY CO., LTD.
Address of Applicant :1, Samsung-ro, Giheung-Gu, Yongin-Si, Gyeonggi-do, 17113, Republic of Korea Republic of Korea
(72)**Name of Inventor :**
1)Young Jin CHO
2)Jin Yup KIM
3)Ha Gyeong SONG
4)Joong Soo MOON
5)Chang Yeol LEE

(57) Abstract :
A display device includes: a display panel; a plurality of pixels in a display area of the display panel; an inspection circuit unit and a pad area in a non-display 5 area of the display panel; a data routing line extending from the display area to the inspection circuit unit and the pad area; a first planarization layer extending from the display area to the inspection circuit unit, and on the data routing line; and a second planarization layer extending from the display area to the inspection circuit unit and the pad area, and on the first planarization layer, wherein the inspection 10 circuit unit is adjacent to the pad area and includes an inspection signal supply line configured to supply an inspection signal to the data routing line, and the second planarization layer includes a first area overlapping the inspection signal supply line and a second area overlapping the pad area. Fig. 6

No. of Pages : 81 No. of Claims : 25

(12) PATENT APPLICATION PUBLICATION
(19) INDIA
(22) Date of filing of Application :02/04/2025
(21) Application No.202514032712 A
(43) Publication Date : 07/11/2025

(54) Title of the invention : DISPLAY DEVICE

(51) International classification	:H10K0059121000, H01L0027120000, G09G0003323300, H10K0059131000, H10K0059126000
(31) Priority Document No	:10-2024-0045519
(32) Priority Date	:03/04/2024
(33) Name of priority country	:Republic of Korea
(86) International Application No	:NA
Filing Date	:NA
(87) International Publication No	: NA
(61) Patent of Addition to Application Number	:NA
Filing Date	:NA
(62) Divisional to Application Number	:NA
Filing Date	:NA

(71)**Name of Applicant :**
1)SAMSUNG DISPLAY CO., LTD.
Address of Applicant :1, Samsung-ro, Giheung-Gu, Yongin-Si, Gyeonggi-do, 17113, Republic of Korea Republic of Korea
(72)**Name of Inventor :**
1)Wansu Kim
2)Jaewon Kim
3)Changyeol Lee
4)Jaeseok Han

(57) Abstract :
A display device includes a first pixel circuit disposed on a substrate and a first light-emitting diode electrically connected to the first pixel circuit, the first pixel circuit includes a driving transistor including a driving semiconductor layer and a driving gate electrode, a first initialization transistor including a first initialization semiconductor layer and a first initialization gate electrode and electrically connected to the driving transistor, and a first connection electrode electrically connecting the first initialization semiconductor layer to the driving gate electrode, a semiconductor layer including the first initialization semiconductor layer includes a first extension area extending from a channel area of the first initialization semiconductor layer to the first connection electrode, and the first extension area overlaps a first shield layer disposed under the first initialization semiconductor layer and a second shield layer disposed above the first initialization semiconductor layer. Fig. 19

No. of Pages : 94 No. of Claims : 24

(12) PATENT APPLICATION PUBLICATION
(21) Application No.202514029214 A
(19) INDIA
(22) Date of filing of Application :27/03/2025
(43) Publication Date : 07/11/2025

(54) Title of the invention : MULTISCOPIC DISPLAY WITH COLLIMATED BACKLIGHT AND CONTROLLABLE LIGHT DIFFUSER

(51) International classification	:G02B0027010000, G02F0001133570, G02F0001133500, G06F0003010000, G06T0011600000
(31) Priority Document No	:18/630,168
(32) Priority Date	:09/04/2024
(33) Name of priority country	:U.S.A.
(86) International Application No	:NA
Filing Date	:NA
(87) International Publication No	: NA
(61) Patent of Addition to Application Number	:NA
Filing Date	:NA
(62) Divisional to Application Number	:NA
Filing Date	:NA

(71)**Name of Applicant :**
1)Distance Technologies Oy
Address of Applicant :John Stenbergin ranta 2, 00530 Helsinki, Finland Finland
(72)**Name of Inventor :**
1)Urho Konttori
2)Mikko Strandborg

(57) Abstract :
Information indicative of a relative location of a first eye (112a, 206a, 208a, 220a, 226a) and of a second eye (112b, 206b, 208b, 220b, 226b) of an individual one of user(s) is obtained. A light field image is generated or retrieved. The light field image is displayed via a liquid crystal display device (102) for presenting virtual object(s). All the aforementioned steps are repeated for a given time period. During the given time period, it is detected when the first eye and/or the second eye lies outside a current viewing zone of a display system (100, 202). When it happens, a given first region of a backlight unit (BLU) (104, 216, 300) is determined to emit a first set of collimated light rays for presenting the virtual object(s) to the first eye, and a given second region of the BLU is determined to emit a second set of collimated light rays for presenting the virtual object(s) to the second eye. A corresponding first portion and a corresponding second portion of controllable light diffuser(s) (106, 204, 306) are selectively activated to horizontally diffuse the first set and the second set, whilst directing towards the first eye and the second eye, respectively. FIG. 1A

No. of Pages : 60 No. of Claims : 20

(12) PATENT APPLICATION PUBLICATION
(21) Application No.202514029481 A
(19) INDIA
(22) Date of filing of Application :27/03/2025
(43) Publication Date : 07/11/2025

(54) Title of the invention : GROMMET AND FASTENING ASSEMBLY

(51) International classification	:F16B0005020000, B23B0051000000, B21J0015020000, A61M0013000000, H01M0010655500
(31) Priority Document No	:2024103960302
(32) Priority Date	:02/04/2024
(33) Name of priority country	:China
(86) International Application No	:NA
Filing Date	:NA
(87) International Publication No	: NA
(61) Patent of Addition to Application Number	:NA
Filing Date	:NA
(62) Divisional to Application Number	:NA
Filing Date	:NA

(71)**Name of Applicant :**
1)ILLINOIS TOOL WORKS INC.
Address of Applicant :155 Harlem Avenue Glenview, Illinois 60025, United States of America U.S.A.
(72)**Name of Inventor :**
1)KONG, Hao
2)WANG, Xing

(57) Abstract :
5 The present disclosure provides a grommet including a body, at least one first retaining portion, at least one second retaining portion and at least one operating portion. The body defines a receiving channel and a longitudinal axis, and includes a first axial body portion and a second axial body portion. The first axial body portion includes at least one first body segment and at least one second body 10 segment disposed about the axis and spaced apart. The first retaining portion is provided on a side of the first body segment facing away from the axis. The second retaining portion is provided at an end of the second body segment away from the second axial body portion and extends away from the axis. The operating portion is provided at an end of the first body segment away from the second axial body 15 portion and extends away from the axis. To Be Published with Figure 2A

No. of Pages : 27 No. of Claims : 12

(12) PATENT APPLICATION PUBLICATION
(21) Application No.202514029864 A
(19) INDIA
(22) Date of filing of Application :28/03/2025
(43) Publication Date : 07/11/2025

(54) Title of the invention : Method and Communication Device for Handling Uplink Transmission

(51) International classification	:H04W24/10, H04W72/21, H04L5/00
(31) Priority Document No	:63/573,488
(32) Priority Date	:03/04/2024
(33) Name of priority country	:U.S.A.
(86) International Application No	:NA
Filing Date	:NA
(87) International Publication No	: NA
(61) Patent of Addition to Application Number	:NA
Filing Date	:NA
(62) Divisional to Application Number	:NA
Filing Date	:NA

(71)**Name of Applicant :**
1)ACER INCORPORATED
Address of Applicant :8F, 88, Sec. 1, Hsin Tai Wu Rd., Xizhi Dist., New Taipei City 221, Taiwan, R.O.C. Taiwan
(72)**Name of Inventor :**
1)Lee, Chien-Min
2)Lo, Li-Chung
3)Chen, Jen-Hsien

(57) Abstract :
A method for a communication device for a communication device handling uplink (UL) transmission includes: receiving a configuration from a network, wherein the configuration comprises a set of reference signals (RSs); performing at least one measurement for the set of RSs, to generate a measurement report; transmitting a first UL channel to the network in response to at least one RS of the set of RSs satisfying a condition; and transmitting a second UL channel comprising the measurement report to the network.

No. of Pages : 75 No. of Claims : 20

(12) PATENT APPLICATION PUBLICATION
(21) Application No.202514029869 A
(19) INDIA
(22) Date of filing of Application :28/03/2025
(43) Publication Date : 07/11/2025

(54) Title of the invention : SEAT BELT BUCKLE FIXING STRUCTURE FOR VEHICLE

(51) International classification	:A44B0011250000, B60R0022180000, B60R0022260000, B60R0022240000, B60R0022195000
(31) Priority Document No	:2024-062987
(32) Priority Date	:09/04/2024
(33) Name of priority country	:Japan
(86) International Application No	:NA
Filing Date	:NA
(87) International Publication No	: NA
(61) Patent of Addition to Application Number	:NA
Filing Date	:NA
(62) Divisional to Application Number	:NA
Filing Date	:NA

(71)**Name of Applicant :**
1)SUZUKI MOTOR CORPORATION
Address of Applicant :300 Takatsuka-cho, Chuo-ku, Hamamatsu-shi, Shizuoka 432-8611, Japan Japan
(72)**Name of Inventor :**
1)Kazuya TANIGUCHI
2)Yudai MINESHIMA

(57) Abstract :
Provided is a seat belt buckle fixing structure for a vehicle capable of ensuring an efficient arrangement and perf ormance of seat belt buckles. A hinge bracket 118 has a brack et lower end section 122 fixed to a floor panel 120 and a brac ket vertical wall section 124 extending upward from the bracke 10 t lower end section 122. A buckle fixing structure 100 also i ncludes a first anchor plate 132 joined to a second seating po sition E2 side of the bracket vertical wall section 124, a fir st webbing 136 connecting the first anchor plate 132 and a fir st buckle 112, a second anchor plate 134 joined to the bracket 15 lower end section 122, and a second webbing 138 connecting th e second anchor plate 134 and a second buckle 114. The hinge bracket 118 has a curved section 154 formed by curving a front edge of the bracket vertical wall section 124 towards the fir st seating position E1.

No. of Pages : 31 No. of Claims : 4

(12) PATENT APPLICATION PUBLICATION
(21) Application No.202514027719 A
(19) INDIA
(22) Date of filing of Application :25/03/2025
(43) Publication Date : 07/11/2025

(54) Title of the invention : ASSEMBLY FOR THE POSITIONING OF PHARMACEUTICAL CONTAINERS DURING FILLING OF SAID CONTAINERS

(51) International classification	:H01M0010052500, F21Y0115100000, G02B0005300000, H01M0050249000, H01M0010613000
(31) Priority Document No	:24170196.0
(32) Priority Date	:15/04/2024
(33) Name of priority country	:EPO
(86) International Application No	:NA
Filing Date	:NA
(87) International Publication No	: NA
(61) Patent of Addition to Application Number	:NA
Filing Date	:NA
(62) Divisional to Application Number	:NA
Filing Date	:NA

(71)**Name of Applicant :**
1)SCHOTT Pharma Schweiz AG
Address of Applicant :St. Josefen-Str. 20, 9000 St. Gallen, Switzerland Switzerland
(72)**Name of Inventor :**
1)WALCHER, Ulrich
2)Dr. BERLINGER, Marcel

(57) Abstract :
An assembly comprising a first structure and a further structure, wherein a. the first structure comprises a first plurality of receptacles that are adapted and arranged for at least partially accommodating a plurality of containers, and that have a first end and a further end, opposite the first end; b. the further structure i. comprises a further plurality of receptacles that are adapted and ar-ranged for at least partially accommodating the plurality of containers, ii. has a first surface and a further surface, opposite the first surface, iii. comprises A. either a first plurality of protrusions extending from the first sur-face, or a further plurality of protrusions extending from the fur-ther surface, or both, B. wherein the first plurality of protrusions, the further plurality of protrusions, or both, are adapted and arranged to exert a force along a further direction on the containers when said containers are being inserted into and/or removed from the further structure along a first direction, wherein I. the first direction is perpendicular to the first surface of the further structure, and II. an angle α between the first direction and the further di-rection is such that $\alpha > 0°$; c. the first structure and the further structure are adapted and arranged to be posi-tioned such that an average distance between the further ends of the first plu-rality of receptacles and the first surface of the further structure is less than 5 cm, and the first plurality of receptacles is at least partially aligned with the further plurality of receptacles.

No. of Pages : 58 No. of Claims : 15

(12) PATENT APPLICATION PUBLICATION
(21) Application No.202514027720 A
(19) INDIA
(22) Date of filing of Application :25/03/2025
(43) Publication Date : 07/11/2025

(54) Title of the invention : NEST WITH MOVABLE PROTRUSIONS FOR PHARMACEUTICAL CONTAINERS

(51) International classification	:B60C0013020000, A47L0015500000, A61M0005315000, A61M0039160000, A61M0039200000	(71)**Name of Applicant :** **1)SCHOTT Pharma Schweiz AG** Address of Applicant :St. Josefen-Str. 20, 9000 St. Gallen, Switzerland Switzerland (72)**Name of Inventor :** **1)Dr. BERLINGER, Marcel** **2)WALCHER, Ulrich**
(31) Priority Document No	:24170194.5	
(32) Priority Date	:15/04/2024	
(33) Name of priority country	:EPO	
(86) International Application No	:NA	
Filing Date	:NA	
(87) International Publication No	: NA	
(61) Patent of Addition to Application Number	:NA	
Filing Date	:NA	
(62) Divisional to Application Number	:NA	
Filing Date	:NA	

(57) Abstract :
A structure comprising a plurality of receptacles, wherein a. said receptacles are adapted and arranged for receiving a plurality of contain-ers; b. each receptacle, of the plurality of receptacles, comprises a sidewall defining an interior of a respective receptacle, wherein i. at least one protrusion is arranged on the sidewall and extends into the interior of the respective receptacle, ii. the at least one protrusion has a first end and a further end, wherein A. the first end is arranged opposite the further end, B. the first end is attached to the sidewall; wherein at least one section of the further end of the at least one protrusion is adapted and arranged to be movable with respect to the sidewall on which said protrusion is arranged.

No. of Pages : 56 No. of Claims : 15

(12) PATENT APPLICATION PUBLICATION
(21) Application No.202514027774 A
(19) INDIA
(22) Date of filing of Application :25/03/2025
(43) Publication Date : 07/11/2025

(54) Title of the invention : ASSEMBLY FOR PHARMACEUTICAL CONTAINERS FOR REDUCING CONTACT BETWEEN CONTAINERS AND SIDEWALLS OF ASSEMBLY

(51) International classification	:H01L0023000000, B65F0001140000, H01L0021280000, A01G0009029000, H02J0050400000
(31) Priority Document No	:24170191.1
(32) Priority Date	:15/04/2024
(33) Name of priority country	:EPO
(86) International Application No	:NA
Filing Date	:NA
(87) International Publication No	: NA
(61) Patent of Addition to Application Number	:NA
Filing Date	:NA
(62) Divisional to Application Number	:NA
Filing Date	:NA

(71)**Name of Applicant :**
1)SCHOTT Pharma Schweiz AG
Address of Applicant :St. Josefen Strasse 20, 9000 St. Gallen, Switzerland Switzerland
(72)**Name of Inventor :**
1)Dr. BERLINGER, Marcel
2)WALCHER, Ulrich

(57) Abstract :
A structure comprising a plurality of receptacles, wherein a. said receptacles are adapted and arranged for receiving a plurality of contain-ers; b. each receptacle, of the plurality of receptacles, comprises a sidewall defining an interior of a respective receptacle, wherein the sidewall comprises at least one protrusion extending into the interior of the respective receptacle; wherein the at least one protrusion extends a first distance into the interior of the respective receptacle, wherein the first distance is in the range from 0 to 1.5 mm. (Fig. 1)

No. of Pages : 51 No. of Claims : 15

(12) PATENT APPLICATION PUBLICATION
(21) Application No.202514027852 A
(19) INDIA
(22) Date of filing of Application :25/03/2025
(43) Publication Date : 07/11/2025

(54) Title of the invention : REAR STRUCTURE OF ELECTRIC VEHICLE

(51) International classification	:B62D0025200000, B62D0025080000, B62D0043100000, B62D0021150000, B62D0021110000
(31) Priority Document No	:2024-060026
(32) Priority Date	:03/04/2024
(33) Name of priority country	:Japan
(86) International Application No	:NA
Filing Date	:NA
(87) International Publication No	: NA
(61) Patent of Addition to Application Number	:NA
Filing Date	:NA
(62) Divisional to Application Number	:NA
Filing Date	:NA

(71)**Name of Applicant :**
1)SUZUKI MOTOR CORPORATION
Address of Applicant :300 Takatsuka-cho, Chuo-ku, Hamamatsu-shi, Shizuoka 432-8611 Japan
(72)**Name of Inventor :**
1)YAMAZAKI Shota

(57) Abstract :
[Problem to be Solved] To enhance rigidity of a floor part used for installing a spare tire and to enhance attachment rigidity of the spare tire. [Solution] In a rear structure of an electric vehicle, the floor part positioned on a rearward side of a battery pack is provided with a tire storage part 12 capable of storing the spare tire therein; the tire storage part 12 has a concave shape recessed downward and includes a bottom part and outer side wall parts 18 and 19 extending upward from both of two vehicle-width side ends of the bottom part; the bottom part is provided with a central bead part 16 extending along a width direction; reinforcement members 40 and 50 joined to the bottom part and the outer side wall parts are joined to outside parts of the central bead part 16; and the outside parts of the central bead part 16 are positioned between front ends and rear ends of the reinforcement members 40 and 50. [Selected Drawing] Figure 6

No. of Pages : 49 No. of Claims : 3

(12) PATENT APPLICATION PUBLICATION
(21) Application No.202514035291 A
(19) INDIA
(22) Date of filing of Application :10/04/2025
(43) Publication Date : 07/11/2025

(54) Title of the invention : SEMICONDUCTOR CARRIER

(51) International classification	:B41J0011000000, H02K0001200000, A61M0011040000, H01M0008120000, B01F0023231000
(31) Priority Document No	:63/633,059
(32) Priority Date	:12/04/2024
(33) Name of priority country	:U.S.A.
(86) International Application No	:NA
Filing Date	:NA
(87) International Publication No	: NA
(61) Patent of Addition to Application Number	:NA
Filing Date	:NA
(62) Divisional to Application Number	:NA
Filing Date	:NA

(71)**Name of Applicant :**
1)GUDENG PRECISION INDUSTRIAL CO., LTD.
Address of Applicant :9F-5., No.2, Sec. 4, Zhongyang Rd., Tucheng Dist., New Taipei City 23678, Taiwan (R.O.C.) Taiwan
(72)**Name of Inventor :**
1)CHIU, MING-CHIEN
2)CHUANG CHIA-HO
3)LEE, KUO-HUA
4)LYU, JYUN-MING

(57) Abstract :
A semiconductor carrier includes an accommodating chamber (S) formed within a housing (1), wherein the housing (1) has multiple through holes (11) in communication with the accommodating chamber (S). A bottom plate (2) is disposed at a bottom of the housing (1), and includes multiple gas supply portions (21) each corresponding to one of the through holes (11). Each of the gas supply portions (21) includes an elastic sealing member (211), which provides airtightness between the gas supply portion (21) and the bottom of the housing (1). A gas chamber (212) is located on the inside of the elastic sealing member (211), and the gas chamber (212) and the through holes (11) are in communication with each other to form a gas buffer channel (W). An installation groove (213) is in communication with the gas chamber (212), and is configured to be disposed with a gas valve (3) for receiving a gas into the accommodating chamber (S) through the gas buffer channel (W).

No. of Pages : 39 No. of Claims : 10

(12) PATENT APPLICATION PUBLICATION
(21) Application No.202514035514 A
(19) INDIA
(22) Date of filing of Application :11/04/2025
(43) Publication Date : 07/11/2025

(54) Title of the invention : COMPOSITE COMPRISING AMORPHOUS SOLID DISPERSION

(51) International classification	:A61K0009140000, A61K0047380000, A61K0009160000, A61K0009200000, A61K0031496000
(31) Priority Document No	:2024-065705
(32) Priority Date	:15/04/2024
(33) Name of priority country	:Japan
(86) International Application No	:NA
Filing Date	:NA
(87) International Publication No	: NA
(61) Patent of Addition to Application Number	:NA
Filing Date	:NA
(62) Divisional to Application Number	:NA
Filing Date	:NA

(71)**Name of Applicant :**
1)SHIN-ETSU CHEMICAL CO., LTD.
Address of Applicant :4-1, Marunouchi 1-chome, Chiyoda-ku, Tokyo 100-0005, Japan Japan
(72)**Name of Inventor :**
1)Mitsuo ISHIMARU
2)Shogo WARASHINA
3)Takafumi HOSHINO

(57) Abstract :
There is provided a composite having a higher dissolution of a drug, the composite including at least a solid dispersion containing the drug and a carrier other than polyvinylpyrrolidone as well as HPMCAS outside the solid dispersion. More specifically, there is provided a composite including at least a solid dispersion containing at least a drug and a carrier selected from the group consisting of a vinylpyrrolidone-vinyl acetate copolymer, methyl cellulose, hydroxypropyl methyl cellulose, hydroxypropyl methyl cellulose phthalate and first hydroxypropyl methyl cellulose acetate succinate; and second hydroxypropyl methyl cellulose acetate succinate outside the solid dispersion.

No. of Pages : 40 No. of Claims : 7

(12) PATENT APPLICATION PUBLICATION
(21) Application No.202514035522 A
(19) INDIA
(22) Date of filing of Application :11/04/2025
(43) Publication Date : 07/11/2025

(54) Title of the invention : METHOD, APPARATUS AND COMPUTER READABLE STORAGE MEDIUM FOR POWERED DEVICE FED BY MULTIPLE POWER SOURCING EQUIPMENTS

(51) International classification	:H04L0005000000, H01L0029780000, H04W0004020000, H04L0041120000, H01L0027105000	(71)**Name of Applicant :** **1)Nokia Solutions and Networks Oy** Address of Applicant :Karakaari 7, 02610 Espoo, Finland, Finland
(31) Priority Document No	:202410439270.6	(72)**Name of Inventor :** **1)GAO, Jun**
(32) Priority Date	:11/04/2024	**2)LEI, Wei Lai**
(33) Name of priority country	:China	**3)ZHANG, Cheng An**
(86) International Application No	:NA	**4)LUO, Bin**
Filing Date	:NA	**5)SUN, Li Hua**
(87) International Publication No	: NA	**6)LIU, Wei**
(61) Patent of Addition to Application Number	:NA	
Filing Date	:NA	
(62) Divisional to Application Number	:NA	
Filing Date	:NA	

(57) Abstract :
Example embodiments of the present disclosure relate to a method, apparatus, and computer-readable storage medium for a powered device fed by a plurality of power-supplying devices. The method comprises: obtaining operating states of a plurality of second devices connected to a plurality of connection ports of the first device; in response to the operating states indicating that feed voltages provided by at least two second devices among the plurality of second devices satisfy a predetermined voltage level, causing at least two switch units corresponding to the at least two second devices among a plurality of switch units to be alternately turned on, each of the plurality of switch units being coupled to a respective connection port of the plurality of connection ports, wherein the turned-on second devices supply power to the first device; and causing the first device to transmit communication signals to the at least two second devices, without transmitting communication signals to other second devices than the at least two second devices among the plurality of second devices.

No. of Pages : 41 No. of Claims : 19

(12) PATENT APPLICATION PUBLICATION
(21) Application No.202514035639 A
(19) INDIA
(22) Date of filing of Application :11/04/2025
(43) Publication Date : 07/11/2025

(54) Title of the invention : SOUND ADJUSTMENT DEVICE

(51) International classification	:H04R0001100000, G10K0011178000, G10L0021027200, H04S0007000000, H04N0021422000
(31) Priority Document No	:113113663
(32) Priority Date	:12/04/2024
(33) Name of priority country	:Taiwan
(86) International Application No	:NA
Filing Date	:NA
(87) International Publication No	: NA
(61) Patent of Addition to Application Number	:NA
Filing Date	:NA
(62) Divisional to Application Number	:NA
Filing Date	:NA

(71)**Name of Applicant :**
1)COTRON CORPORATION
Address of Applicant :12FL., NO. 150, SEC. 4, CHENG-DE RD., SHIHLIN DISTRICT, TAIPEI CITY, TAIWAN 111, R.O.C. Taiwan
(72)**Name of Inventor :**
1)YANG, BILL

(57) Abstract :
A sound adjustment device (100) including a background sound source (110), an external sound source receiver (120), a frequency adjuster (130), a mixer (140), and an output port (150). A background audio signal (B10) provided by the background sound source (110) is a mono audio signal. The external sound source receiver (120) is used to receive an external audio signal (E10). The frequency adjuster (130) is used to receive and adjust the background audio signal (B10) into a left ear background audio signal (B12) and a right ear background audio signal (B14) having a frequency difference. The mixer (140) is used to mix the external audio signal (E10) and the left ear background audio signal (B12) into a left ear audio signal (L10), and to mix the external audio signal (E10) and the right ear background audio signal (B14) into a right ear audio signal (R10).

No. of Pages : 12 No. of Claims : 7

(12) PATENT APPLICATION PUBLICATION
(21) Application No.202514035659 A
(19) INDIA
(22) Date of filing of Application :11/04/2025
(43) Publication Date : 07/11/2025

(54) Title of the invention : TOILET SHELL AND FRAME

(51) International classification	:A63B0024000000, F24F0008100000, F24F0013200000, A63B0071060000, B65H0016100000	(71)**Name of Applicant :** **1)Kohler Co.** Address of Applicant :444 Highland Drive, Kohler, Wisconsin – 53044, USA. U.S.A.
(31) Priority Document No	:63/634,198	(72)**Name of Inventor :** **1)Douglas Mahoney**
(32) Priority Date	:15/04/2024	**2)Jeffrey T. Laundre**
(33) Name of priority country	:U.S.A.	
(86) International Application No	:NA	
Filing Date	:NA	
(87) International Publication No	: NA	
(61) Patent of Addition to Application Number	:NA	
Filing Date	:NA	
(62) Divisional to Application Number	:NA	
Filing Date	:NA	

(57) Abstract :
A toilet includes a frame, a toilet bowl coupled to the frame, a base configured to support the frame, a cowling supported by the frame, at least one removable side panel, and a skirt configured to overlap at least one side panel or the base. The at least one removable side panel includes, a front shell, a left side panel and a right side panel.

No. of Pages : 49 No. of Claims : 20

(12) PATENT APPLICATION PUBLICATION
(21) Application No.202514035679 A
(19) INDIA
(22) Date of filing of Application :11/04/2025
(43) Publication Date : 07/11/2025

(54) Title of the invention : DEVELOPING SOLUTION AND MANUFACTURING METHOD FOR COLOR FILTER USING THE SAME

(51) International classification	:G02B0005200000, C08K0005130000, G03F0007320000, C11D0003040000, G03F0007000000
(31) Priority Document No	:202410446436.7
(32) Priority Date	:15/04/2024
(33) Name of priority country	:China
(86) International Application No	:NA
Filing Date	:NA
(87) International Publication No	: NA
(61) Patent of Addition to Application Number	:NA
Filing Date	:NA
(62) Divisional to Application Number	:NA
Filing Date	:NA

(71)**Name of Applicant :**
1)KAYAKU CHEMICAL (WUXI) CO.,LTD.
Address of Applicant :No. 6, Xinda Road, Xinba village, Xibei Town, Xishan District Wuxi City, Jiangsu Province, China China
(72)**Name of Inventor :**
1)PENG, Jia
2)YIN, Shuai
3)FUKAI, Atsushi

(57) Abstract :
Provided are a developing solution having excellent developability without causing residues and under cuts, and a manufacturing method for a color filter using the same. The 5 developing solution comprises a (A) polyoxyethylene phenyl ether and a (D) polyoxyethylene tristyrenated phenyl ether, and optionally comprises a (B) polyoxyethylene monostyrenated phenyl ether and/or a (C) polyoxyethylene distyrenated phenyl ether.

No. of Pages : 22 No. of Claims : 11

(12) PATENT APPLICATION PUBLICATION
(21) Application No.202514036074 A
(19) INDIA
(22) Date of filing of Application :14/04/2025
(43) Publication Date : 07/11/2025

(54) Title of the invention : METHOD FOR PRODUCING ARTIFICIAL STONE SLABS AND RELATIVE SLAB

(51) International classification	:B01J0035630000, C22C0038060000, C04B0040000000, B28B0013020000, C22C0038020000	(71)**Name of Applicant :** **1)LAMINAM SPA** Address of Applicant :Via Ghiarola Nuova, 258 – 41042 Fiorano Modenese (MO) – Italy. Italy
(31) Priority Document No	:102024000008515	(72)**Name of Inventor :** **1)PEROZZI, Michele Patrizio**
(32) Priority Date	:15/04/2024	
(33) Name of priority country	:Italy	
(86) International Application No	:NA	
Filing Date	:NA	
(87) International Publication No	: NA	
(61) Patent of Addition to Application Number	:NA	
Filing Date	:NA	
(62) Divisional to Application Number	:NA	
Filing Date	:NA	

(57) Abstract :
The present invention relates to a method (900) for producing artificial stone slabs comprising grinding (901) an inert material comprising silicates having an aluminium oxide content greater than or equal to 25% by weight, until a mixture of granulated material is obtained in which a coarse fraction of granules, having a diameter greater than 300 µm, is 70% by weight of the total weight of the mixture. The method (900) further comprises spraying and drying (902) a suspension comprising the granulated material by means of an atomizing device until an atomized material is obtained. Furthermore, the method comprises depositing (903) the atomized material on at least one movable surface of a compacting device and compacting (904) the atomized material on the movable surface, to obtain a slab of compacted material. The method (900) further comprises heating (906) the slab of compacted material to a temperature between 50°C and 1250°C, for a time period of less than or equal to 45 min and greater than or equal to 10 min, to obtain a slab of consolidated material.

No. of Pages : 22 No. of Claims : 10

(12) PATENT APPLICATION PUBLICATION
(21) Application No.202514036171 A
(19) INDIA
(22) Date of filing of Application :15/04/2025
(43) Publication Date : 07/11/2025

(54) Title of the invention : POWER REGULATION CIRCUIT, BATTERY MANAGEMENT SYSTEM, BATTERY PACK, AND ELECTRIC DEVICE

(51) International classification	:H02J0007000000, H01L0023000000, H01L0025065000, H01M0010480000, H02P0001420000
(31) Priority Document No	:202410458761.5
(32) Priority Date	:16/04/2024
(33) Name of priority country	:China
(86) International Application No	:NA
Filing Date	:NA
(87) International Publication No	: NA
(61) Patent of Addition to Application Number	:NA
Filing Date	:NA
(62) Divisional to Application Number	:NA
Filing Date	:NA

(71)**Name of Applicant :**
1)Xiamen Ampack Technology Limited
Address of Applicant :No.600-1, Hongtang Road, Tongxiang High-tech Zone, Torch High-tech District, Xiamen City, Fujian Province, China, 361000 China
(72)**Name of Inventor :**
1)Shiyong WEN
2)Zili LI
3)Xia JIANG

(57) Abstract :
A power regulation circuit includes a first chip, a second chip, a first grounding terminal, a second grounding terminal, a control unit, a first switch unit, a second switch unit, a first power-consuming element, and a second power-consuming element. A first ground pin of the first chip is connected to the first grounding terminal, a second ground pin of the second chip is connected to the second grounding terminal, and a voltage value of the second grounding terminal is positive relative to the first grounding terminal. The control unit is connected to the first chip via the first switch unit, and is connected to the second chip via the second switch unit. The first chip is connected to the first power-consuming element via the first switch unit. The second chip is connected to the second power-consuming element via the second switch unit. (To be published with FIG. 1)

No. of Pages : 33 No. of Claims : 10

(12) PATENT APPLICATION PUBLICATION
(21) Application No.202514036275 A
(19) INDIA
(22) Date of filing of Application :15/04/2025
(43) Publication Date : 07/11/2025

(54) Title of the invention : DISPLAY APPARATUS AND AN ELECTRONIC DEVICE INCLUDING THE SAME

(51) International classification	:H10K0050110000, H10K0101400000, H10K0085600000, C09K0011060000, H10K0050150000
(31) Priority Document No	:10-2024-0050207
(32) Priority Date	:15/04/2024
(33) Name of priority country	:Republic of Korea
(86) International Application No	:NA
Filing Date	:NA
(87) International Publication No	: NA
(61) Patent of Addition to Application Number	:NA
Filing Date	:NA
(62) Divisional to Application Number	:NA
Filing Date	:NA

(71)**Name of Applicant :**
1)Samsung Display Co., Ltd.
Address of Applicant :1, Samsung-ro, Giheung-gu, Yongin-si, Gyeonggi-do, 17113, Korea Republic of Korea
(72)**Name of Inventor :**
1)Donghun Nam
2)Donghyun Son
3)Eunhye Kim
4)Sola Lee

(57) Abstract :
A display apparatus (1) includes: a substrate (100) including a first area (MDA) in which first sub-pixels (Pm) are disposed and a second area (CA) in which basic units (AU) are disposed, the basic units (AU) including transmission areas (TA) and sub-pixel groups (PG) including second sub-pixels (Pa); first lines (DL1: DL1-1, DL1-2, DL1-3) extending in a first direction and electrically connected to the first sub-pixels (Pm), the first lines 10 (DL1: DL1-1, DL1-2, DL1-3) each including a first sub-line (DL1-1a, DL1-2a, DL1-3a) and a second sub-line (DL1-1b, DL1-2b, DL1-3b) apart from each other with the second area (CA) therebetween; first connection lines (DNL: DNL1, DNL2, DNL3) disposed in the first area (MDA) and each connecting the first sub-line (DL1-1a, DL1-2a, DL1-3a) and the second sub-line (DL1-1b, DL1-2b, DL1-3b) of each of the first lines (DL1: DL1-1, DL1-2, 15 DL1-3) to each other; and second lines (DL2) extending in the first direction and electrically connected to the second sub-pixels (Pa).

No. of Pages : 78 No. of Claims : 23

(12) PATENT APPLICATION PUBLICATION
(21) Application No.202514032734 A
(19) INDIA
(22) Date of filing of Application :02/04/2025
(43) Publication Date : 07/11/2025

(54) Title of the invention : VEHICLE SIDE STRUCTURE

(51) International classification	:B60R22/24, B62D25/04
(31) Priority Document No	:2024-066222
(32) Priority Date	:16/04/2024
(33) Name of priority country	:Japan
(86) International Application No	:NA
Filing Date	:NA
(87) International Publication No	: NA
(61) Patent of Addition to Application Number	:NA
Filing Date	:NA
(62) Divisional to Application Number	:NA
Filing Date	:NA

(71)**Name of Applicant :**
1)SUZUKI MOTOR CORPORATION
Address of Applicant :300 Takatsuka-cho, Chuo-ku, Hamamatsu-shi, Shizuoka 432-8611 Japan
(72)**Name of Inventor :**
1)HARA Shuntaro

(57) Abstract :
[Problem to be Solved] To secure rigidity against a load caused at the time of collision at a pillar portion provided with a retractor and a guide member of a seat belt device. [Solution] A pillar portion 1 of a vehicle side structure is provided with an opening portion 11 extending in an up-down direction, and a retractor 25 is stored inside the opening portion 11. The vehicle side structure includes a lower fixation member 13 expanding on one side out of an inner side and an outer side from the pillar portion 1 located below the opening portion 11 with a lower portion of the retractor 25 fixed to the lower fixation member 13, and an upper fixation member 15 expanding on the other side that differs from the one side from the pillar portion 1 located above the opening portion 11 with an upper portion of the retractor 25 fixed to the upper fixation member 15, and the lower fixation member 13 and the upper fixation member 15 are joined to the pillar portion 1 located at a periphery of the opening portion 11 in a state in which a part of the opening portion 11 is covered. [Selected Drawing] Figure 4

No. of Pages : 33 No. of Claims : 5

(12) PATENT APPLICATION PUBLICATION
(21) Application No.202514032736 A
(19) INDIA
(22) Date of filing of Application :02/04/2025
(43) Publication Date : 07/11/2025

(54) Title of the invention : VEHICLE CONTROL SYSTEM

(51) International classification	:B60T7/12, B60T7/22
(31) Priority Document No	:2024-063969
(32) Priority Date	:11/04/2024
(33) Name of priority country	:Japan
(86) International Application No	:NA
Filing Date	:NA
(87) International Publication No	: NA
(61) Patent of Addition to Application Number	:NA
Filing Date	:NA
(62) Divisional to Application Number	:NA
Filing Date	:NA

(71)**Name of Applicant :**
1)SUZUKI MOTOR CORPORATION
Address of Applicant :300 Takatsuka-cho, Chuo-ku, Hamamatsu-shi, Shizuoka 432-8611 Japan
(72)**Name of Inventor :**
1)SASADA Akihiro

(57) Abstract :
[Problem to be Solved] To provide a vehicle control system that can perform appropriate automatic brake control according to the environment surrounding a vehicle. [Solution] A vehicle control system 1 includes a collision determination unit 21a that determines the collision probability with a target obstacle present ahead of a vehicle, a brake control unit 21b that controls a braking force to perform automatic brake control according to the collision possibility determined by the collision determination unit 21a, an environment recognition unit 22 that recognizes the environment surrounding the vehicle, a status recognition unit 23 that recognizes the detection status of an obstacle around the vehicle, and a control adjustment unit 24 that changes the type of the target obstacle in the automatic brake control and the lower vehicle speed limit for starting the automatic brake control, based on the environment surrounding the vehicle recognized by the environment recognition unit 22 and the detection status recognized by the status recognition unit 23. [Selected Drawing] Figure 1

No. of Pages : 51 No. of Claims : 10

(12) PATENT APPLICATION PUBLICATION
(21) Application No.202514032759 A
(19) INDIA
(22) Date of filing of Application :02/04/2025
(43) Publication Date : 07/11/2025

(54) Title of the invention : Concept for Trustworthiness Check of Video Data Streams

(51) International classification	:H04L0009400000, H04L0009320000, H04N0019423000, H04N0019172000, H04N0019174000	(71)**Name of Applicant :** **1)Fraunhofer-Gesellschaft zur Förderung der angewandten Forschung e.V.** Address of Applicant :Hansastraße 27c 80686 München, Germany Germany (72)**Name of Inventor :** **1)PFAFF, Jonathan** **2)HINZ, Tobias** **3)SÜHRING, Karsten** **4)SCHWARZ, Heiko** **5)MARPE, Detlev** **6)WIEGAND, Thomas**
(31) Priority Document No	:24168160.0	
(32) Priority Date	:02/04/2024	
(33) Name of priority country	:EPO	
(86) International Application No	:NA	
Filing Date	:NA	
(87) International Publication No	: NA	
(61) Patent of Addition to Application Number	:NA	
Filing Date	:NA	
(62) Divisional to Application Number	:NA	
Filing Date	:NA	

(57) Abstract :
A method for checking a video data stream having a video encoded thereinto on trustworthiness comprises: subjecting a predetermined portion of the video data stream, or data derived therefrom, to a hash function to obtain a hash value; deriving a digital signature from the video data stream; and checking whether the hash value fits to the digital signature to determine whether the video data stream is trustworthy.

No. of Pages : 161 No. of Claims : 129

(12) PATENT APPLICATION PUBLICATION
(21) Application No.202514032769 A
(19) INDIA
(22) Date of filing of Application :02/04/2025
(43) Publication Date : 07/11/2025

(54) Title of the invention : Trustworthiness of Video Data Streams

(51) International classification	:H04L0009400000, H04L0009320000, H04N0019423000, H04N0019172000, H04N0019174000
(31) Priority Document No	:24168161.8
(32) Priority Date	:02/04/2024
(33) Name of priority country	:EPO
(86) International Application No	:NA
Filing Date	:NA
(87) International Publication No	: NA
(61) Patent of Addition to Application Number	:NA
Filing Date	:NA
(62) Divisional to Application Number	:NA
Filing Date	:NA

(71)**Name of Applicant :**
1)Fraunhofer-Gesellschaft zur Förderung der angewandten Forschung e.V.
Address of Applicant :Hansastraße 27c 80686 München, Germany Germany
(72)**Name of Inventor :**
1)PFAFF, Jonathan
2)HINZ, Tobias
3)SÜHRING, Karsten
4)SCHWARZ, Heiko
5)MARPE, Detlev
6)WIEGAND, Thomas

(57) Abstract :
A method for checking a video data stream having a video encoded thereinto on trustworthiness comprises: subjecting a predetermined portion of the video data stream, or data derived therefrom, to a hash function to obtain a hash value; deriving a digital signature from the video data stream; and checking whether the hash value fits to the digital signature to determine whether the video data stream is trustworthy.

No. of Pages : 160 No. of Claims : 129

(12) PATENT APPLICATION PUBLICATION
(19) INDIA
(22) Date of filing of Application :02/04/2025
(21) Application No.202514032774 A
(43) Publication Date : 07/11/2025

(54) Title of the invention : Trustworthiness Check of Media Data Streams

(51) International classification	:H04L0009320000, H04L0009400000, H04L0009060000, H04L0065600000, H04N0019423000
(31) Priority Document No	:24168162.6
(32) Priority Date	:02/04/2024
(33) Name of priority country	:EPO
(86) International Application No	:NA
Filing Date	:NA
(87) International Publication No	: NA
(61) Patent of Addition to Application Number	:NA
Filing Date	:NA
(62) Divisional to Application Number	:NA
Filing Date	:NA

(71)**Name of Applicant :**
1)Fraunhofer-Gesellschaft zur Förderung der angewandten Forschung e.V.
Address of Applicant :Hansastraße 27c 80686 München, Germany Germany
(72)**Name of Inventor :**
1)PFAFF, Jonathan
2)HINZ, Tobias
3)SÜHRING, Karsten
4)SCHWARZ, Heiko
5)GRÜNEBERG, Karsten
6)MARPE, Detlev
7)WIEGAND, Thomas

(57) Abstract :
A method for checking a media data stream having a media stream encoded thereinto on trustworthiness comprises: subjecting a predetermined portion of the media data stream, or data derived therefrom, to a hash function to obtain a hash value; deriving a digital signature from the media data stream; and checking whether the hash value fits to the digital signature to determine whether the media data stream is trustworthy.

No. of Pages : 184 No. of Claims : 57

(12) PATENT APPLICATION PUBLICATION
(21) Application No.202514029871 A
(19) INDIA
(22) Date of filing of Application :28/03/2025
(43) Publication Date : 07/11/2025

(54) Title of the invention : Method and Communication Device for Handling Uplink Transmission

(51) International classification	:H04W0072210000, H04W0072126800, G01R0031280000, H04W0052340000, H04W0072230000
(31) Priority Document No	:63/573,492
(32) Priority Date	:03/04/2024
(33) Name of priority country	:U.S.A.
(86) International Application No	:NA
Filing Date	:NA
(87) International Publication No	: NA
(61) Patent of Addition to Application Number	:NA
Filing Date	:NA
(62) Divisional to Application Number	:NA
Filing Date	:NA

(71)**Name of Applicant :**
1)ACER INCORPORATED
Address of Applicant :8F, 88, Sec. 1, Hsin Tai Wu Rd., Xizhi Dist., New Taipei City, Taiwan, R.O.C. (Postal Code: 221) Taiwan
(72)**Name of Inventor :**
1)Lee, Chien-Min
2)Lo, Li-Chung
3)Chen, Jen-Hsien

(57) Abstract :
A method for a communication device for a communication device handling uplink (UL) transmission includes: receiving a configuration from a network, wherein the configuration comprises a set of candidate configurations and each candidate configuration in the set of candidate configurations comprises at least one of a candidate identity (ID), a physical cell ID, a synchronization signal/physical broadcast channel (SS/PBCH) block (SSB) frequency, a subcarrier spacing (SCS) of an SSB, a SSB periodicity and a SSB transmission power; and performing at least one UL transmission with a candidate cell corresponding to a candidate configuration in the set of candidate configurations according to at least one indicator.

No. of Pages : 76 No. of Claims : 21

(12) PATENT APPLICATION PUBLICATION
(21) Application No.202514029938 A
(19) INDIA
(22) Date of filing of Application :28/03/2025
(43) Publication Date : 07/11/2025

(54) Title of the invention : CARTRIDGE NEST, WHICH FEATURES INTEGRATED CENTERING OF THE CARTRIDGES

(51) International classification	:B01L0009060000, A61J0001160000, B65D0025100000, A61J0001060000, A61M0005000000
(31) Priority Document No	:24170195.2
(32) Priority Date	:15/04/2024
(33) Name of priority country	:EPO
(86) International Application No	:NA
Filing Date	:NA
(87) International Publication No	: NA
(61) Patent of Addition to Application Number	:NA
Filing Date	:NA
(62) Divisional to Application Number	:NA
Filing Date	:NA

(71)**Name of Applicant :**
1)SCHOTT Pharma Schweiz AG
Address of Applicant :St. Josefen-Str. 20, 9000 St. Gallen, Switzerland Switzerland
(72)**Name of Inventor :**
1)VASANTHAMOHAN, Nithan
2)Dr. BERLINGER, Marcel

(57) Abstract :
The present invention relates to a holding structure (100) for concurrently holding a plurality of primary packaging containers (200) for substances for pharmaceutical, medical or cosmetic applications, each primary packaging container (200) comprising an elongated cylindrical body region (201) having a longitudinal axis Lcontainer that runs in a longitudinal direction through the centre of the elongated cylindrical body region (201), the holding structure (100) comprising: - a plurality of receptacles (101) for accommodating at least a section (201') of the elon-gated cylindrical body region (201) of the primary packaging container (200), each re-ceptacle (101) having a depth h, an upper end (102) for inserting the primary packaging container (200) into the receptacle (101), a bottom end (103) having a holding portion (104) configured to limit an axial movement of the primary packaging container (200) in the receptacle (101), a circumferentially formed side wall (105) extending in a longi-tudinal direction from the upper end (102) to the bottom end (103) and a longitudinal axis Lreceptable that runs in a longitudinal direction through the centre of the receptacle (101); - alignment elements (106) in each receptacle (101) that project radially into the recepta-cle (101) and that are adapted and arranged to contact a part of the outer surface of the elongated cylindrical body region (201) of a primary packaging container (200) ac-commodated in the receptacle (101); wherein the alignment elements (106) in each receptacle (101) are adapted and arranged to contact a part of the outer surface of the elongated cylindrical body region (201) in such a way that a primary packaging container (200) accommodated in the receptacle (101) in a rest-ing position is tilt by an angel α of not more than 2.4 degrees, the tilting angle α being the angle that is formed between longitudinal axis Lreceptacle and longitudinal axis Lcontainer of the primary packaging container (200) accommodated in the receptacle (101) and the resting po-sition being the position in which the holding portion (104) limits the axial movement of the primary packaging container (200) accommodated in the receptacle (101). The invention also relates to an arrangement comprising the holding structure (100) and a plurality of primary packaging containers (200), to a transport unit comprising the arrange-ment and a secondary packaging container and to the use of the holding structure (100).

No. of Pages : 53 No. of Claims : 15

(12) PATENT APPLICATION PUBLICATION

(21) Application No.202514029950 A

(19) INDIA

(22) Date of filing of Application :28/03/2025

(43) Publication Date : 07/11/2025

(54) Title of the invention : METHODS AND SYSTEMS FOR GENERATING PROGRAMMABLE LOGIC CONTROLLER CODE USING LARGE LANGUAGE MODELS

(51) International classification	:G05B0019050000, G06F0009460000, G06N0020000000, G06F0011360000, G06N0003080000
(31) Priority Document No	:63/633,534
(32) Priority Date	:12/04/2024
(33) Name of priority country	:U.S.A.
(86) International Application No	:NA
Filing Date	:NA
(87) International Publication No	: NA
(61) Patent of Addition to Application Number	:NA
Filing Date	:NA
(62) Divisional to Application Number	:NA
Filing Date	:NA

(71)**Name of Applicant :**

1)Schneider Electric USA, Inc.

Address of Applicant :1 Boston Place, Suite 2700, Boston, MA 02108, USA, U.S.A.

(72)**Name of Inventor :**

1)Darie, Alexandru

2)Makhoul, Khaldoun

3)Ghosh, Mohua

(57) Abstract :

Relatively simple user input is used to build an entire application. Input data defines a set of specifications for an automated machine. The set of specifications includes one or more of hardware specifications, operating systems, software frameworks, runtime environments, network connectivity, and environmental considerations. The input data is analyzed to retrieve relevant information from a large corpus including a plurality of libraries. One or more prompts are generated based on the relevant information, and the one or more prompts are used to generate programmable logic controller (PLC) code including a sequence of operations for controlling the automated machine.

No. of Pages : 32 No. of Claims : 15

(12) PATENT APPLICATION PUBLICATION
(21) Application No.202514033006 A
(19) INDIA
(22) Date of filing of Application :03/04/2025
(43) Publication Date : 07/11/2025

(54) Title of the invention : INTEGRATED UNIT OF PROTECTOR AND HOLDER

(51) International classification	:B60R0016020000, H02G0003040000, G09G0003200000, B60R0016027000, F21Y0115100000
(31) Priority Document No	:2024-064551
(32) Priority Date	:12/04/2024
(33) Name of priority country	:Japan
(86) International Application No	:NA
Filing Date	:NA
(87) International Publication No	: NA
(61) Patent of Addition to Application Number	:NA
Filing Date	:NA
(62) Divisional to Application Number	:NA
Filing Date	:NA

(71)**Name of Applicant :**
1)Sumitomo Wiring Systems, Ltd.
Address of Applicant :1-14, Nishisuehiro-cho, Yokkaichi-shi, Mie 5108503 Japan Japan
2)SUZUKI MOTOR CORPORATION
(72)**Name of Inventor :**
1)SUZUKI, Masao
2)HATTORI, Hideki
3)EHARA, Naoya
4)MOCHIZUKI, Tamaki
5)IKEYA, Toshinori
6)KOORI, Yoshinori
7)TAKAYAMA, Rui

(57) Abstract :
An object is to achieve attachment of a component protecting a wire harness and a component holding a connector to a vehicle at a less number of positions. An integrated unit 20 of a protector and a holder includes a protector 30 and a holder 50. The protector 30 includes a protector body 32 protecting a wire harness, vehicle attachment parts 36 and 38, and counterpart attachment parts 40 and 44. The holder 50 includes a holder body 52 holding a connector and attachment parts 60 and 64 attached to the counter part attachment part. (Selected Figure: Fig. 5)

No. of Pages : 33 No. of Claims : 9

(12) PATENT APPLICATION PUBLICATION
(21) Application No.202514033009 A
(19) INDIA
(22) Date of filing of Application :03/04/2025
(43) Publication Date : 07/11/2025

(54) Title of the invention : Electric system control

(51) International classification	:G09G0003340000, H04W0074000000, H04W0074083300, G06T0019000000, G08G0001010000
(31) Priority Document No	:EP 24170590.4
(32) Priority Date	:16/04/2024
(33) Name of priority country	:EPO
(86) International Application No	:NA
Filing Date	:NA
(87) International Publication No	: NA
(61) Patent of Addition to Application Number	:NA
Filing Date	:NA
(62) Divisional to Application Number	:NA
Filing Date	:NA

(71)**Name of Applicant :**
1)Schneider Toshiba Inverter Europe SAS
Address of Applicant :33 rue André Blanchet, F-27120 Pacy sur Eure- France France
(72)**Name of Inventor :**
1)CATALANO, Saverio
2)FRAPPÉ, Emmanuel

(57) Abstract :
Examples include methods for supplying a power from a photovoltaic panel to an electric motor; a computer-readable storage medium, a computer program product, a processor and a control circuit comprising instructions allowing carrying out the methods; and a VSD adapted to implement the methods. Fig. 5

No. of Pages : 36 No. of Claims : 15

(12) PATENT APPLICATION PUBLICATION
(21) Application No.202514033021 A
(19) INDIA
(22) Date of filing of Application :03/04/2025
(43) Publication Date : 07/11/2025

(54) Title of the invention : DISPLAY DEVICE

(51) International classification	:H10K0059131000, H10K0059121000, H10K0102000000, H01L0027120000, H10K0059124000
(31) Priority Document No	:10-2024-0050780
(32) Priority Date	:16/04/2024
(33) Name of priority country	:Republic of Korea
(86) International Application No	:NA
Filing Date	:NA
(87) International Publication No	: NA
(61) Patent of Addition to Application Number	:NA
Filing Date	:NA
(62) Divisional to Application Number	:NA
Filing Date	:NA

(71)**Name of Applicant :**
1)SAMSUNG DISPLAY CO., LTD.
Address of Applicant :1, Samsung-ro, Giheung-gu, Yongin-si, Gyeonggi-do, -- -- -- Republic of Korea 17113 -- Republic of Korea
(72)**Name of Inventor :**
1)DEOK-YOUNG CHOI
2)MIKYUNG KIM
3)JOOHYE JUNG
4)YOUNGJIN CHO

(57) Abstract :
A display device includes: a base substrate including a first area, a second area spaced apart from the first area in a first direction, and a third area between the first area and the second area; a pixel in the first area; and a signal line in the first, second, and third areas, the signal line including: a first line portion in the first area; an insulating layer on the first line portion and having a plurality of contact holes defined therethrough; a connection portion on the insulating layer and connected to the first line portion via the contact holes; and a second line portion extending from the first area to the third area and on a different layer from the first line portion, wherein the contact holes are covered by the second line portion and overlap the second line portion in a plan view. Fig. 6a

No. of Pages : 69 No. of Claims : 20

(12) PATENT APPLICATION PUBLICATION
(21) Application No.202514033023 A
(19) INDIA
(22) Date of filing of Application :03/04/2025
(43) Publication Date : 07/11/2025

(54) Title of the invention : AGRICULTURAL MACHINE EXTRACTOR ASSEMBLY, DEFLECTOR FOR AGRICULTURAL MACHINE EXTRACTOR ASSEMBLY AND AGRICULTURAL MACHINE

(51) International classification	:F04D0029320000, A01C0007080000, F04D0029660000, A01B0079000000, A01C0007200000
(31) Priority Document No	:10 2024 006673 1
(32) Priority Date	:04/04/2024
(33) Name of priority country	:Brazil
(86) International Application No	:NA
Filing Date	:NA
(87) International Publication No	: NA
(61) Patent of Addition to Application Number	:NA
Filing Date	:NA
(62) Divisional to Application Number	:NA
Filing Date	:NA

(71)**Name of Applicant :**
1)CNH Industrial Brasil Ltda.
Address of Applicant :Alameda Oscar Niemeyer, nº 132, Sala nº 801, Bairro Vale do Sereno, Nova Lima, MG 34006-049, Brazil Brazil
(72)**Name of Inventor :**
1)THIAGO SILVEIRA SIMONETTI NORBERTO
2)JOÃO AUGUSTO MARCOLIN LUCCA
3)JEAN CARLOS PEREIRA DE CAMARGO
4)ALAN PATRICK DOS SANTOS

(57) Abstract :
This is an agricultural machine extractor assembly and a deflector for an agricultural machine extractor assembly, the deflector being designed to cause the air passing through the external walls of the extractor assembly to intersect, which reduces the air flow velocity and improves the mixing of the wastes, resulting in a more uniform waste exhaustion and allowing better direction of said wastes out of the agricultural machine. More particularly, the deflector may consist of a flat plate, which may include a perimeter adapted to be coupled to an extractor hood of an extractor assembly of an agricultural machine. The deflector may also include a fixing plate and a fixing assembly. The invention also relates to an agricultural machine, in which at least one extractor assembly is installed.

No. of Pages : 30 No. of Claims : 16

(12) PATENT APPLICATION PUBLICATION
(21) Application No.202514033091 A
(19) INDIA
(22) Date of filing of Application :03/04/2025
(43) Publication Date : 07/11/2025

(54) Title of the invention : ELECTRIC POWER SUPPLY SYSTEM

(51) International classification	:H02J0007000000, B62D0005040000, H02J0001100000, C02F0001320000, B60M0001360000
(31) Priority Document No	:2024- 066924
(32) Priority Date	:17/04/2024
(33) Name of priority country	:Japan
(86) International Application No	:NA
Filing Date	:NA
(87) International Publication No	: NA
(61) Patent of Addition to Application Number	:NA
Filing Date	:NA
(62) Divisional to Application Number	:NA
Filing Date	:NA

(71)**Name of Applicant :**
1)DENSO CORPORATION
Address of Applicant :1-1, Showa-cho, Kariya-city, Aichi-pref, 448-8661, Japan Japan
(72)**Name of Inventor :**
1)Koji ITO
2)Taisuke KURACHI
3)Kimikazu NAKAMURA
4)Yoshinori MORITA

(57) Abstract :
An electric power supply system includes: a high-voltage battery; a low-voltage battery having a nominal voltage lower than that of the high-voltage battery, the low-voltage battery being electrically connected to a load; a first converter electrically connected between the high-voltage battery and the low-voltage battery, the first converter being configured to perform voltage conversion between the high-voltage battery and the low-voltage battery; a second converter electrically connected between the high-voltage battery and the lowvoltage battery, the second converter being configured to perform voltage conversion between the high-voltage battery and the low-voltage battery, the second converter having rated electric power lower than that of the first converter; and a control device that controls operations of the first converter and the second converter. The control device can selectively execute a plurality of operation modes depending on a total value of output currents of the first converter and the second converter.

No. of Pages : 27 No. of Claims : 5

(12) PATENT APPLICATION PUBLICATION
(21) Application No.202514031087 A
(19) INDIA
(22) Date of filing of Application :29/03/2025
(43) Publication Date : 07/11/2025

(54) Title of the invention : GENERATION APPARATUS AND MACHINE-LEARNING-MODEL GENERATION APPARATUS

(51) International classification	:H04N0023630000, B41M0007000000, A61B0006500000, H04N0005262000, H04N0023600000
(31) Priority Document No	:2024-059469
(32) Priority Date	:02/04/2024
(33) Name of priority country	:Japan
(86) International Application No	:NA
Filing Date	:NA
(87) International Publication No	: NA
(61) Patent of Addition to Application Number	:NA
Filing Date	:NA
(62) Divisional to Application Number	:NA
Filing Date	:NA

(71)**Name of Applicant :**
1)KYOSAN ELECTRIC MFG. CO., LTD.
Address of Applicant :29-1, Heiancho 2-chome, Tsurumi-ku, Yokohama-shi, Kanagawa 230-0031 Japan Japan
(72)**Name of Inventor :**
1)HIDARI Taiki
2)OKI Yuji

(57) Abstract :
A generation apparatus detects in a tracking manner image portions of persons seen in a come-and-go moving image in which a place where the persons come and go is captured. The generation apparatus infers whether or not each of the persons seen in the image portion has fallen in a condition of difficulties in movement based on a change in shape of each of the detected image portions. The generation apparatus performs control of causing a predetermined storage section to store one of the image portions, which is determined as positive through the inference, as training data.

No. of Pages : 26 No. of Claims : 4

(12) PATENT APPLICATION PUBLICATION
(21) Application No.202514031306 A
(19) INDIA
(22) Date of filing of Application :30/03/2025
(43) Publication Date : 07/11/2025

(54) Title of the invention : PLATFORM FOR A.I. ASSISTANTS DRIVEN KNOWLEDGE FORUM

(51) International classification	:G06F0003160000, G11B0020140000, G06Q0010063100, G06F0040300000, G06Q0030060100
(31) Priority Document No	:63/572,279
(32) Priority Date	:31/03/2024
(33) Name of priority country	:U.S.A.
(86) International Application No	:NA
Filing Date	:NA
(87) International Publication No	: NA
(61) Patent of Addition to Application Number	:NA
Filing Date	:NA
(62) Divisional to Application Number	:NA
Filing Date	:NA

(71)**Name of Applicant :**
1)Aparajithan Rajendran
Address of Applicant :18518 Kingsdale Avenue Redondo Beach, CA 90278 UNITED STATES U.S.A.
(72)**Name of Inventor :**
1)Aparajithan Rajendran

(57) Abstract :
The present disclosure relates to a system for dynamic knowledge processing and resource management and a context driven A.I. assistant platform in a marketplace. Various subsystems such as, an input subsystem, virtual assistant subsystems, a plurality of input translator subsystems, and a consumable management assistant subsystem including a consumable catalog and a consumable provider are disclosed. Upon checking that a response to a query requires external knowledge, the query is sent to the consumable management assistant subsystem, where it is detected whether the response to the query is available in the consumable catalog. Accordingly, the response to the query is provided by the consumable provider through triggering a demand-supply-value (DSV) engine, thereby enabling the A.I. assistants to scale their knowledge and serviceability with minimal reprogramming and cost. In addition, the context driven platform offers a real time knowledge driven collaboration forum by tracking storing, publishing real time values of assets.

No. of Pages : 66 No. of Claims : 20

(12) PATENT APPLICATION PUBLICATION
(21) Application No.202514031663 A
(19) INDIA
(22) Date of filing of Application :31/03/2025
(43) Publication Date : 07/11/2025

(54) Title of the invention : COMPLEX-SHAPED BATTERY PACK

(51) International classification	:H02J0007000000, H01M0050209000, H01M0010040000, H01M0050516000, B60L0050600000
(31) Priority Document No	:63/633,595
(32) Priority Date	:12/04/2024
(33) Name of priority country	:U.S.A.
(86) International Application No	:NA
Filing Date	:NA
(87) International Publication No	: NA
(61) Patent of Addition to Application Number	:NA
Filing Date	:NA
(62) Divisional to Application Number	:NA
Filing Date	:NA

(71)**Name of Applicant :**
1)CUMMINS INC.
Address of Applicant :500 Jackson Street Columbus, Indiana 47201, United States of America (US) U.S.A.
(72)**Name of Inventor :**
1)John Ringstad

(57) Abstract :
An energy storage system may include a battery bay defining an installation design envelope. In addition, the energy storage system may include a plurality of batteries, each battery including: a casing designed to protect internal components of the battery, the casing defining an outer profile with a plurality of battery legs, including a first battery leg in a first orientation and a second battery leg in a second orientation different from the first orientation, where the second battery leg extends away from the first battery leg, and a set of battery cells arranged within the casing to form the outer profile. The energy storage system may include where the outer profiles of the plurality of batteries are configured to fit within the installation design envelope, and at least two of the batteries are mirrored across a longitudinal midplane of the installation design envelope such that the first battery legs of the mirrored batteries are positioned at opposite outboard sections of the installation design envelope. Fig. 4A

No. of Pages : 53 No. of Claims : 10

(12) PATENT APPLICATION PUBLICATION
(21) Application No.202514031676 A
(19) INDIA
(22) Date of filing of Application :31/03/2025
(43) Publication Date : 07/11/2025

(54) Title of the invention : DISPLAY APPARATUS AND ELECTRONIC DEVICE INCLUDING THE SAME

(51) International classification	:H10K0050110000, H10K0101400000, H10K0085600000, C09K0011060000, H10K0050150000
(31) Priority Document No	:10-2024-0045517
(32) Priority Date	:03/04/2024
(33) Name of priority country	:Republic of Korea
(86) International Application No	:NA
Filing Date	:NA
(87) International Publication No	: NA
(61) Patent of Addition to Application Number	:NA
Filing Date	:NA
(62) Divisional to Application Number	:NA
Filing Date	:NA

(71)**Name of Applicant :**
1)Samsung Display Co., Ltd.
Address of Applicant :1, Samsung-ro, Giheung-gu, Yongin-si, Gyeonggi-do, 17113, Korea Republic of Korea
(72)**Name of Inventor :**
1)Hansol Kim
2)Wansu Kim
3)Chaeyeol Lim
4)Youngjin Cho
5)Eunbyul Jo

(57) Abstract :
A display apparatus (10) includes a substrate (100) including a display area (DA) and a peripheral area (PA), unit pixel areas (PU) in the display area (DA), and including a first pixel circuit (PC1), a second pixel circuit (PC2), and a third pixel circuit (PC3), a power voltage supply line (PSL) in the peripheral area (PA), a first driving voltage line (PL1) electrically connected to the power voltage supply line (PSL), and having a mesh structure in the display area (DA), and a second driving voltage line (PL2) electrically connected to the power voltage supply line (PSL), at a different layer from the first driving voltage line (PL1), extending in a first direction in the display area (DA), and connected to the first driving voltage line (PL1) through at least one inner contact hole (CNTi) in the unit pixel areas (PU).

No. of Pages : 90 No. of Claims : 27

(12) PATENT APPLICATION PUBLICATION
(21) Application No.202514031766 A
(19) INDIA
(22) Date of filing of Application :31/03/2025
(43) Publication Date : 07/11/2025

(54) Title of the invention : DISPLAY DEVICE AND ELECTRONIC DEVICE

(51) International classification	:G02F0001133500, H10K0077100000, H03H0009050000, H03H0009210000, G02F0001133570
(31) Priority Document No	:10-2024-0044791
(32) Priority Date	:02/04/2024
(33) Name of priority country	:Republic of Korea
(86) International Application No	:NA
Filing Date	:NA
(87) International Publication No	: NA
(61) Patent of Addition to Application Number	:NA
Filing Date	:NA
(62) Divisional to Application Number	:NA
Filing Date	:NA

(71)**Name of Applicant :**
1)SAMSUNG DISPLAY CO., LTD.
Address of Applicant :1, Samsung-ro, Giheung-gu, Yongin-si, Gyeonggi-do, 17113, Republic of Korea Republic of Korea
(72)**Name of Inventor :**
1)Youngjin Cho
2)Jaedu Noh
3)Changyeol Lee
4)Soyoung Jang
5)Eunbyul Jo

(57) Abstract :
A display device (1) includes first to fourth pixels, wherein each of the first to fourth pixels includes first to third sub-pixels, a first data connection pattern (DCP1a, DCP1b) electrically connected to a first data line (DL1) by a first contact hole and electrically connected to the second sub-pixel of the second pixel (SP2b), and a second data connection pattern (DCP2a, DCP2b) electrically connected to a second data line (DL2) by a second contact hole and electrically connected to the second sub-pixel (SP2d) of the fourth pixel (Pd), wherein, in a plan view, the first contact hole is disposed between the emission area (EA3) of the third subpixel (SP3b) of the first pixel (Pa) and the emission area (EA3) of the third sub-pixel (SP3b) of the second pixel (Pb), and in a plan view, the first contact hole and the second contact hole are disposed in a row in the second direction (DR2).

No. of Pages : 106 No. of Claims : 27

(12) PATENT APPLICATION PUBLICATION
(21) Application No.202514031824 A
(19) INDIA
(22) Date of filing of Application :31/03/2025
(43) Publication Date : 07/11/2025

(54) Title of the invention : DRUG INJECTION DEVICE AND DRUG INJECTION ASSEMBLY

(51) International classification	:A61M0005310000, A61M0005315000, A61M0025000000, A61M0005200000, A61M0005142000
(31) Priority Document No	:2024-059147
(32) Priority Date	:01/04/2024
(33) Name of priority country	:Japan
(86) International Application No	:NA
Filing Date	:NA
(87) International Publication No	: NA
(61) Patent of Addition to Application Number	:NA
Filing Date	:NA
(62) Divisional to Application Number	:NA
Filing Date	:NA

(71)**Name of Applicant :**
1)HIRAKAWA HEWTECH CORPORATION
Address of Applicant :4-17-5, Shiba, MINATO-KU, TOKYO, 108-0014, Japan Japan
(72)**Name of Inventor :**
1)OOTAKENO, Souta
2)SUZUKI, Yuutarou
3)ICHINOSE, Yoshiaki

(57) Abstract :
The object is to provide a drug injection device and a drug injection assembly that can reduce the burden on the operator and prevent drugs such as liquid embolic materials from sticking to the hub 5 lumen. A drug injection device 1 is configured to be coupled at a distal end side A to a catheter 2 comprising a catheter body 21 having a catheter lumen 21a and a hub 22 having a hub lumen 224 joined to a proximal end side B of the catheter body 21 to communicate with the catheter lumen 21a, and to be supplied with a drug contained in a syringe barrel 31 from a proximal end side B, and injects the drug supplied from the syringe barrel 31 into a living body through the catheter lumen 10 21a without going through the hub lumen 224. 23

No. of Pages : 30 No. of Claims : 11

(12) PATENT APPLICATION PUBLICATION
(19) INDIA
(22) Date of filing of Application :01/04/2025
(21) Application No.202514032255 A
(43) Publication Date : 07/11/2025

(54) Title of the invention : DISPLAY DEVICE

(51) International classification	:G09F0009300000, A47F0005025000, H04N0005655000, G02F0001133570, G02F0001133500
(31) Priority Document No	:10-2024-0044781
(32) Priority Date	:02/04/2024
(33) Name of priority country	:Republic of Korea
(86) International Application No	:NA
Filing Date	:NA
(87) International Publication No	: NA
(61) Patent of Addition to Application Number	:NA
Filing Date	:NA
(62) Divisional to Application Number	:NA
Filing Date	:NA

(71)**Name of Applicant :**
1)Samsung Display Co., LTD.
Address of Applicant :1, Samsung-ro, Giheung-gu, Yongin-si, Gyeonggi-do, 17113, Korea Republic of Korea
(72)**Name of Inventor :**
1)Young Jin CHO
2)Han Sol KIM
3)Joong Soo MOON
4)Chang Yeol LEE
5)Eun Byul JO

(57) Abstract :
A display device (10) includes: a display panel (110) including: a plurality of light emitting elements (LE) in a display area (DA) for displaying an image; and an inorganic area (VAL) in a non-display area (NDA) around the display area (DA). Each of the plurality of light emitting elements (LE) includes: a pixel electrode (PXE); a light emitting layer (EL) on the pixel electrode (PXE); and a common electrode (CE) on the light emitting layer (EL). The display panel (110) includes a first side, a second side opposite to the first side, and a third side connected to the first side and the second side. In the non-display area (NDA) on the first side of the display panel (110), the common electrode (CE) overlaps with the inorganic area (VAL), and in the non-display area (NDA) on the third side of the display panel (110), the common electrode (CE) is spaced from the inorganic area (VAL).

No. of Pages : 80 No. of Claims : 26

(12) PATENT APPLICATION PUBLICATION
(19) INDIA
(22) Date of filing of Application :01/04/2025
(21) Application No.202514032343 A
(43) Publication Date : 07/11/2025

(54) Title of the invention : DISPLAY DEVICE

(51) International classification	:G09F0009300000, A47F0005025000, H04N0005655000, G02F0001133570, G02F0001133500
(31) Priority Document No	:10-2024-0044626
(32) Priority Date	:02/04/2024
(33) Name of priority country	:Republic of Korea
(86) International Application No	:NA
Filing Date	:NA
(87) International Publication No	: NA
(61) Patent of Addition to Application Number	:NA
Filing Date	:NA
(62) Divisional to Application Number	:NA
Filing Date	:NA

(71)**Name of Applicant :**
1)Samsung Display Co., Ltd.
Address of Applicant :1, Samsung-Ro, Giheung-Gu, Yongin-si, Gyeonggi-Do, Korea Republic of Korea
(72)**Name of Inventor :**
1)CHANG-YEOL LEE
2)HANSOL KIM
3)JOONG-SOO MOON
4)YOUNGJIN CHO
5)JAEWON KIM

(57) Abstract :
Disclosed is a display device (DD) including a detection line (EL-T) disposed in a nondisplay area (NDA), first power lines (PL1-1 to PL1-n) connected to pixels (PX) to provide a first driving voltage (ELVDD), and a second power line (PL2) including first lines (PL2-1 to PL2-e) and a second line (PL2-S) that provides a second driving voltage (ELVSS) to the pixels (PX), wherein the detection line (EL-T) includes extension lines (EL-D) spaced apart from each other by the display area (DA), a bridge line (EL-B) connected to the first power lines (PL1-1 to PL1-n), and connection lines (EL-C) connecting one of the extension lines (EL-D) and an end portion of the bridge line (EL-B) as well as another one of the extension lines (EL-D) and another end portion of the bridge line (EL-B), and the second power line (PL2) overlaps the connection lines (EL-C) in a plan view.

No. of Pages : 66 No. of Claims : 22

(12) PATENT APPLICATION PUBLICATION
(21) Application No.202514033228 A
(19) INDIA
(22) Date of filing of Application :04/04/2025
(43) Publication Date : 07/11/2025

(54) Title of the invention : METHOD FOR MEASURING THE WEAR OF AN INVOLUTE SPLINE OF A HUB DRIVE WITH PLANETARY GEARBOX

(51) International classification	:H10N0030200000, E21B0047024000, G01D0005200000, A45D0007040000, G01M0013000000
(31) Priority Document No	:24305589.4
(32) Priority Date	:11/04/2024
(33) Name of priority country	:EPO
(86) International Application No	:NA
Filing Date	:NA
(87) International Publication No	: NA
(61) Patent of Addition to Application Number	:NA
Filing Date	:NA
(62) Divisional to Application Number	:NA
Filing Date	:NA

(71)**Name of Applicant :**
1)ALSTOM Holdings
Address of Applicant :48 Rue Albert Dhalenne 93400 ST OUEN SUR SEINE FRANCE France
(72)**Name of Inventor :**
1)CEPAK Werner

(57) Abstract :
The method comprises: - a step of application of a mechanical brake to fix the sun gear (20) in position, - a step of application of an alternating torque on the rotor (16), - a step of measuring an angular displacement of the rotor (16) versus the stator (14), and - a step of translating the measured angular displacement of the rotor (16) into a wear value of the involute spline. Figure : Figure 1

No. of Pages : 11 No. of Claims : 5

(12) PATENT APPLICATION PUBLICATION
(21) Application No.202514033300 A
(19) INDIA
(22) Date of filing of Application :04/04/2025
(43) Publication Date : 07/11/2025

(54) Title of the invention : An oiling device for a texturing machine and a texturing machine

(51) International classification	:D02G0001020000, D01D0005096000, F01M0001060000, B65D0090300000, A24F0040420000
(31) Priority Document No	:202420688662.1
(32) Priority Date	:07/04/2024
(33) Name of priority country	:China
(86) International Application No	:NA
Filing Date	:NA
(87) International Publication No	: NA
(61) Patent of Addition to Application Number	:NA
Filing Date	:NA
(62) Divisional to Application Number	:NA
Filing Date	:NA

(71)**Name of Applicant :**
1)Oerlikon (China) Technology Co., Ltd.
Address of Applicant :No. 9 Chang Yang Street, Suzhou Industrial Park, Suzhou, Jiangsu Province, P.R. China China
(72)**Name of Inventor :**
1)Chuanjun SONG
2)Weidong QIAO
3)Longjiang WANG

(57) Abstract :
ABSTRACT An oiling device for a texturing machine and a texturing machine Present application provides an oiling device of a texturing machine and a texturing machine; the oiling device of the texturing machine includes a frame having a plurality of machine sections, a main oil storage tank located on the left side of the frame, and an oil outlet pipe connecting the main oil storage tank with an oil storage reservoir of each machine section, wherein the oiling device includes: an oil circuit distributor, which is located on the oil outlet pipe and the oil circuit distributor comprises: an oil inlet port, which is connected to the main oil storage tank via the oil outlet pipe; and an oil outlet port, which is connected to the oil storage reservoir via the oil outlet pipe. By means of the embodiments of present application, oil supply to the oiling device of each section of the texturing machine can be made sufficient, and the use of connecting parts can be reduced, thus reducing the cost, and potential oil leakage points can be reduced.

No. of Pages : 45 No. of Claims : 14

(12) PATENT APPLICATION PUBLICATION
(21) Application No.202514033613 A
(19) INDIA
(22) Date of filing of Application :06/04/2025
(43) Publication Date : 07/11/2025

(54) Title of the invention : VERSATILE, MODULAR, AND STACKABLE FOUR-WHEELED MOBILE PLATFORM VEHICLE

(51) International classification	:G05D0001000000, B62D0063020000, G06V0020580000, B62D0007060000, B60G0017015000
(31) Priority Document No	:18/631,550
(32) Priority Date	:10/04/2024
(33) Name of priority country	:U.S.A.
(86) International Application No	:NA
Filing Date	:NA
(87) International Publication No	: NA
(61) Patent of Addition to Application Number	:NA
Filing Date	:NA
(62) Divisional to Application Number	:NA
Filing Date	:NA

(71)**Name of Applicant :**
1)ALI KAZEMKHANI
Address of Applicant :3188 Hoskins Road, North Vancouver, BC V7J3L2 Canada Canada
(72)**Name of Inventor :**
1)ALI KAZEMKHANI

(57) Abstract :
A versatile, modular, and stackable four-wheeled mobile platform vehicle includes a chassis having a substantially flat deck and an in-built compartment for housing battery module(s). The vehicle includes a steering assembly with a steering column configured to be selectively used in a first configuration, a second configuration, or a third configuration. The vehicle further comprises a relatively flat suspension system, and attachment provisions provided on and around the chassis for removably attaching one or more attachments to transform the vehicle into one or more useful vehicle types. The chassis allows mounting of seat(s) in multiple seating configurations. Further, each of the four wheels is motor-controlled, and is coupled to the chassis to support the chassis for rolling on a surface using a pair of control arms.

No. of Pages : 45 No. of Claims : 20

(12) PATENT APPLICATION PUBLICATION
(21) Application No.202514034009 A
(19) INDIA
(22) Date of filing of Application :07/04/2025
(43) Publication Date : 07/11/2025

(54) Title of the invention : DISPLAY DEVICE

(51) International classification	:H04R0001020000, H04R0001280000, H04R0007040000, E04B0002880000, B60R0011020000
(31) Priority Document No	:10-2024-0047723
(32) Priority Date	:09/04/2024
(33) Name of priority country	:Republic of Korea
(86) International Application No	:NA
Filing Date	:NA
(87) International Publication No	: NA
(61) Patent of Addition to Application Number	:NA
Filing Date	:NA
(62) Divisional to Application Number	:NA
Filing Date	:NA

(71)**Name of Applicant :**
1)LG ELECTRONICS INC.
Address of Applicant :128, Yeoui-daero, Yeongdeungpo-gu, Seoul Republic of Korea 07336 Republic of Korea
(72)**Name of Inventor :**
1)Sungphil Hwang
2)Sungeun Yang

(57) Abstract :
Disclosed is a display device. The display device of the present disclosure may include: a display panel; a frame located in a rear of the display panel; and a speaker coupled to a rear of the frame, wherein the speaker may include: a speaker box; a speaker unit coupled to the speaker box; a plate which covers the speaker unit and which is coupled to the speaker box; a chamber which is formed between the speaker unit and the plate, and which is opened in one direction; and a cushion which occupies a portion of the chamber.

No. of Pages : 54 No. of Claims : 15

(12) PATENT APPLICATION PUBLICATION
(21) Application No.202514034027 A
(19) INDIA
(22) Date of filing of Application :07/04/2025
(43) Publication Date : 07/11/2025

(54) Title of the invention : RADAR MEASURING DEVICE

(51) International classification	:H04W0052240000, H04W0052360000, H04W0088060000, H04W0052140000, H02M0003335000
(31) Priority Document No	:10 2024 109 825.2
(32) Priority Date	:09/04/2024
(33) Name of priority country	:Germany
(86) International Application No	:NA
Filing Date	:NA
(87) International Publication No	: NA
(61) Patent of Addition to Application Number	:NA
Filing Date	:NA
(62) Divisional to Application Number	:NA
Filing Date	:NA

(71)**Name of Applicant :**
1)VEGA GRIESHABER KG
Address of Applicant :Hauptstraße 5 77709 Wolfach, Germany Germany
(72)**Name of Inventor :**
1)RAUER, Winfried
2)MUELLER, Christoph

(57) Abstract :
Radar measuring device for process automation in an industrial or private environment, with a control unit for calculating an average transmission power of a radar measuring signal to be emitted during a measuring interval and for dividing the measuring interval 5 into several successive partial measuring intervals if the calculated average transmission power is greater than the preset threshold power. (Fig. 1) 10 16

No. of Pages : 18 No. of Claims : 14

(12) PATENT APPLICATION PUBLICATION
(21) Application No.202514034113 A
(19) INDIA
(22) Date of filing of Application :07/04/2025
(43) Publication Date : 07/11/2025

(54) Title of the invention : HIGH EFFICIENCY BACKLIGHT FOR MULTISCOPIC DISPLAY

(51) International classification	:G02F0001133570, G02F0001133500, G09G0003340000, F21V0008000000, G01B0011250000	(71)**Name of Applicant :** **1)Distance Technologies Oy** Address of Applicant :John Stenbergin ranta 2, 00530 Helsinki, Finland Finland
(31) Priority Document No	:18/636,976	(72)**Name of Inventor :** **1)Urho Konttori**
(32) Priority Date	:16/04/2024	**2)Petri Savolainen**
(33) Name of priority country	:U.S.A.	**3)Mikko Strandborg**
(86) International Application No	:NA	**4)Mikko Juhola**
Filing Date	:NA	
(87) International Publication No	: NA	
(61) Patent of Addition to Application Number	:NA	
Filing Date	:NA	
(62) Divisional to Application Number	:NA	
Filing Date	:NA	

(57) Abstract :
A backlight unit (100, 202, 404) for a liquid crystal display device (200, 302, 402) is disclosed. The backlight unit comprises an array of light-emitting elements (102a-c) and a plurality of cavity reflectors (104a-c), wherein a given cavity reflector partially surrounds a corresponding light-emitting element of said array. The backlight unit further comprises a collimator (106) arranged on an optical path of the array of light-emitting elements, a first drive circuit that is employed to individually control the light-emitting elements of said array, and a controller. The controller is configured to generate or receive drive signals for controlling the light-emitting elements of said array, and send the drive signals to the first drive circuit. FIG. 1

No. of Pages : 60 No. of Claims : 20

(12) PATENT APPLICATION PUBLICATION
(19) INDIA
(22) Date of filing of Application :07/04/2025
(21) Application No.202514034114 A
(43) Publication Date : 07/11/2025

(54) Title of the invention : LIGHT FIELD DISPLAY USING BIREFRINGEMENT MATERIALS AND METAMATERIALS

(51) International classification	:G02B0027010000, B60K0035230000, G06F0003010000, B60K0035000000, G09G0003000000
(31) Priority Document No	:18/636,386
(32) Priority Date	:16/04/2024
(33) Name of priority country	:U.S.A.
(86) International Application No	:NA
Filing Date	:NA
(87) International Publication No	: NA
(61) Patent of Addition to Application Number	:NA
Filing Date	:NA
(62) Divisional to Application Number	:NA
Filing Date	:NA

(71)**Name of Applicant :**
1)Distance Technologies Oy
Address of Applicant :John Stenbergin ranta 2, 00530 Helsinki, Finland Finland
(72)**Name of Inventor :**
1)Mikko Strandborg

(57) Abstract :
A first virtual image and a second virtual image are obtained, based on a relative location of a first eye (114a) and a second eye (114b) of at least one user with respect to an optical element (110). An image is generated, based on the first virtual image, the second virtual image, the relative location of the first eye and the second eye with respect to the optical element, and a relative location of the optical element with respect to a first display region (106) and a second display region (108) of a display unit (104). The image is displayed via the display unit. The optical element, being made of a birefringent material or a metamaterial, re-directs light (116) emanating from the second display region to bend towards the first eye and the second eye, whilst allowing light (118) emanating from the first display region to be incident upon the first eye and the second eye without bending. FIG. 1

No. of Pages : 47 No. of Claims : 20

(12) PATENT APPLICATION PUBLICATION
(21) Application No.202514034115 A
(19) INDIA
(22) Date of filing of Application :07/04/2025
(43) Publication Date : 07/11/2025

(54) Title of the invention : REFINING HEAD POSE TRACKING BASED ON SEAT POSITION AND ORIENTATION

(51) International classification	:G06F0003010000, B60N0002020000, H04S0007000000, G06T0015080000, G02B0027010000
(31) Priority Document No	:18/636,357
(32) Priority Date	:16/04/2024
(33) Name of priority country	:U.S.A.
(86) International Application No	:NA
Filing Date	:NA
(87) International Publication No	: NA
(61) Patent of Addition to Application Number	:NA
Filing Date	:NA
(62) Divisional to Application Number	:NA
Filing Date	:NA

(71)**Name of Applicant :**
1)Distance Technologies Oy
Address of Applicant :John Stenbergin ranta 2, 00530 Helsinki, Finland Finland
(72)**Name of Inventor :**
1)Mikko Strandborg
2)Thomas Carlsson

(57) Abstract :
Tracking means (102, 712) is utilised to estimate potential positions of a head (210, 412, 506) of a user (208, 718) sitting on a seat (204, 206, 300, 404, 504) of a vehicle (202, 406). A three-dimensional (3D) volume where the user's head is likely to be present is determined, based on a current setting of adjustable seat parameter(s), the adjustable seat parameter(s) being detected by sensor(s) (104). It is detected whether at least one of the plurality of potential positions of the head lies outside the 3D volume. When it is detected that at least one of the plurality of potential positions of the head lies outside the 3D volume, the at least one of the plurality of potential positions is considered as an outlier, and a correct position of the user's head is determined as one of the plurality of potential positions of the head that lies within the 3D volume. FIG. 1

No. of Pages : 46 No. of Claims : 20

(12) PATENT APPLICATION PUBLICATION
(21) Application No.202514034116 A
(19) INDIA
(22) Date of filing of Application :07/04/2025
(43) Publication Date : 07/11/2025

(54) Title of the invention : HYBRID MOTION STABILISATION FOR AUGMENTED REALITY DISPLAYS

(51) International classification	:G06T0019000000, G06F0003034600, G02B0027010000, G06F0003048200, G06F0003140000
(31) Priority Document No	:18/630,154
(32) Priority Date	:09/04/2024
(33) Name of priority country	:U.S.A.
(86) International Application No	:NA
Filing Date	:NA
(87) International Publication No	: NA
(61) Patent of Addition to Application Number	:NA
Filing Date	:NA
(62) Divisional to Application Number	:NA
Filing Date	:NA

(71)**Name of Applicant :**
1)Distance Technologies Oy
Address of Applicant :John Stenbergin ranta 2, 00530 Helsinki, Finland Finland
(72)**Name of Inventor :**
1)Joona Petrell
2)Mikko Strandborg
3)Thomas Carlsson

(57) Abstract :
When a relative position of a given eye (114a-114b) with respect to an optical combiner (106) changes by more than a predefined threshold at least a predefined number of times over a predefined time period, then for a subsequent time period, a three-dimensional (3D) view frustum (118) corresponding to the given eye is updated, in response to the changes in the relative position of the given eye. A spatial anchor (120) is maintained at a predefined position within the 3D view frustum. Corresponding positions for a graphical element (122) are determined in images to be presented to the given eye, based on the predefined position of the spatial anchor within the 3D view frustum. The images are generated for presenting the graphical element to the given eye, positioning the graphical element at the corresponding positions. FIG. 1C

No. of Pages : 49 No. of Claims : 16

(12) PATENT APPLICATION PUBLICATION
(21) Application No.202514034396 A
(19) INDIA
(22) Date of filing of Application :08/04/2025
(43) Publication Date : 07/11/2025

(54) Title of the invention : ROTOR MANUFACTURING APPARATUS

(51) International classification	:H02K15/035, H02K1/27
(31) Priority Document No	:2024-066678
(32) Priority Date	:17/04/2024
(33) Name of priority country	:Japan
(86) International Application No	:NA
Filing Date	:NA
(87) International Publication No	: NA
(61) Patent of Addition to Application Number	:NA
Filing Date	:NA
(62) Divisional to Application Number	:NA
Filing Date	:NA

(71)**Name of Applicant :**
1)TOYOTA BOSHOKU KABUSHIKI KAISHA
Address of Applicant :1-1, Toyoda-cho, Kariya-shi, Aichi-ken 448 8651, Japan Japan
(72)**Name of Inventor :**
1)Yuto ITO
2)Yuki WAKIMOTO

(57) Abstract :
A rotor manufacturing apparatus includes a first die and a second die configured to sandwich and clamp multiple rotor cores, which include magnets accommodated in slots, in an axial direction. The first die includes multiple urging sections configured to urge the rotor cores toward the second die. One of the first die and the second die includes multiple supply passages configured to supply plastic to the slots of the rotor cores. The first die and the second die are configured to sandwich and clamp the rotor cores collectively against urging forces of the urging sections.

No. of Pages : 34 No. of Claims : 4

(12) PATENT APPLICATION PUBLICATION
(21) Application No.202514034545 A
(19) INDIA
(22) Date of filing of Application :08/04/2025
(43) Publication Date : 07/11/2025

(54) Title of the invention : MANAGING UTILITY BILLS AND OPTIMIZING UTILITY CONSUMPTION OF A UTILITY CONSUMPTION SITE

(51) International classification	:G06Q0050060000, G06Q0010040000, G01D0004000000, G06Q0030028300, G06Q0020100000
(31) Priority Document No	:63/631,691
(32) Priority Date	:09/04/2024
(33) Name of priority country	:U.S.A.
(86) International Application No	:NA
Filing Date	:NA
(87) International Publication No	: NA
(61) Patent of Addition to Application Number	:NA
Filing Date	:NA
(62) Divisional to Application Number	:NA
Filing Date	:NA

(71)**Name of Applicant :**
1)APPLIED SOLAR TECHNOLOGIES (INDIA) PRIVATE LIMITED
Address of Applicant :A-5, SARASWATI HOUSE, NARAINA INDUSTRIAL AREA, PHASE II, NEW DELHI, Delhi 110028, India Delhi India
(72)**Name of Inventor :**
1)SINGH, Shweta
2)JUNEJA, Ashok

(57) Abstract :
Approaches for managing utility bills and optimizing utility consumption in industrial environments are described. A utility bill resolution system 5 automates extraction, parsing, analysis, and resolution of utility bills from utility providers. The system detects anomalies within bills using machine learning models and verifies bill authenticity using real-time consumption data. A utility consumption optimization system analyzes historical consumption data and utility rate information to generate optimized 10 operation schedules for utility-intensive equipment and processes. The optimization system considers time-of-day pricing structures and implements peak shaving strategies to reduce costs. Both systems leverage advanced technologies including optical character recognition, natural language processing, and Internet of Things (IoT) devices to enhance 15 accuracy and efficiency. The integrated approach enables industrial consumers to ensure billing accuracy, proactively optimize utility consumption patterns, and achieve significant cost savings while improving operational efficiency across multiple utility consumption sites.

No. of Pages : 84 No. of Claims : 20

(12) PATENT APPLICATION PUBLICATION
(21) Application No.202514034611 A
(19) INDIA
(22) Date of filing of Application :08/04/2025
(43) Publication Date : 07/11/2025

(54) Title of the invention : MULTISCOPIC DISPLAY USING STACKED LIQUID CRYSTAL LAYERS

(51) International classification	:G02B0027010000, G02F0001133500, G06F0003010000, B60K0035230000, G02B0005300000
(31) Priority Document No	:18/636,976
(32) Priority Date	:16/04/2024
(33) Name of priority country	:U.S.A.
(86) International Application No	:NA
Filing Date	:NA
(87) International Publication No	: NA
(61) Patent of Addition to Application Number	:NA
Filing Date	:NA
(62) Divisional to Application Number	:NA
Filing Date	:NA

(71)**Name of Applicant :**
1)Distance Technologies Oy
Address of Applicant :John Stenbergin ranta 2, 00530 Helsinki, Finland Finland
(72)**Name of Inventor :**
1)Mikko Strandborg

(57) Abstract :
A first virtual image and a second virtual image are obtained, based on a relative location of a first eye (120a) and a second eye (120b) of user(s) with respect to an image plane (122) of a display device (104). The display device comprises a backlight (108), a first polarizer (110) and a second polarizer (112), a first liquid crystal (LC) layer (114) and a second LC layer (116) arranged between the first polarizer and the second polarizer and having a gap (118). Drive signals are generated, based on the first virtual image, the second virtual image, and the relative location of the first eye and the second eye. The first LC layer and the second LC layer is controlled using the drive signals, to adjust a polarization of light passing therethrough, for producing a synthetic light field presenting the first virtual image and the second virtual image to the first eye and the second eye, respectively. FIG. 1A

No. of Pages : 51 No. of Claims : 20

(12) PATENT APPLICATION PUBLICATION
(21) Application No.202514034697 A
(19) INDIA
(22) Date of filing of Application :09/04/2025
(43) Publication Date : 07/11/2025

(54) Title of the invention : TOILET

(51) International classification	:E03F1/00, E03D5/00, E03D3/10
(31) Priority Document No	:63/632,287
(32) Priority Date	:10/04/2024
(33) Name of priority country	:U.S.A.
(86) International Application No	:NA
Filing Date	:NA
(87) International Publication No	: NA
(61) Patent of Addition to Application Number	:NA
Filing Date	:NA
(62) Divisional to Application Number	:NA
Filing Date	:NA

(71)**Name of Applicant :**
1)Kohler Co.
Address of Applicant :444 Highland Drive, Kohler, Wisconsin – 53044, USA. U.S.A.
(72)**Name of Inventor :**
1)William C. Kuru
2)Yunjie Zhang
3)Clayton C. Garrels
4)Peter Denzin
5)Jason M. Kwacz
6)Prasanth Jayakumar
7)Arya Haria
8)M P Sakthiyanandan

(57) Abstract :
In one embodiment, a vacuum toilet includes a base including a toilet bowl, a sump pipe, and a tank coupled to the bowl via the sump pipe. A vacuum generator is coupled to the tank. The vacuum generator is configured to apply a first pressure during a flush cycle and a second pressure during a drain cycle. In one embodiment, a vacuum toilet includes a toilet bowl, a drain pipe valve compartment, a tank coupled to the toilet bowl, and a vacuum generator including a high pressure outlet connected to the drain pipe valve compartment and a low pressure outlet connected to the tank.

No. of Pages : 159 No. of Claims : 20

(12) PATENT APPLICATION PUBLICATION
(21) Application No.202514034716 A
(19) INDIA
(22) Date of filing of Application :09/04/2025
(43) Publication Date : 07/11/2025

(54) Title of the invention : VEHICLE EXTERIOR COMPONENT

(51) International classification	:F21V0008000000, H01B0005140000, G02F0001133500, G02B0005280000, B32B0027000000
(31) Priority Document No	:2024-066262
(32) Priority Date	:16/04/2024
(33) Name of priority country	:Japan
(86) International Application No	:NA
Filing Date	:NA
(87) International Publication No	: NA
(61) Patent of Addition to Application Number	:NA
Filing Date	:NA
(62) Divisional to Application Number	:NA
Filing Date	:NA

(71)**Name of Applicant :**
1)TOYODA GOSEI CO., LTD.
Address of Applicant :1, Haruhinagahata, Kiyosu-shi, Aichi-ken 452- 8564 Japan Japan
(72)**Name of Inventor :**
1)Kenta MATSUSHIMA
2)Yukari ITO
3)Hiroaki ANDO

(57) Abstract :
A vehicle exterior component includes a housing having an opening, a light source disposed in the housing, and a cover that covers the opening of the housing. The cover includes a transparent base layer capable of transmitting light from the light source, and a color-developing layer that is stacked on the transparent base layer in a thickness direction. The color-developing layer includes an exterior color layer and a color adjustment layer that exhibit different colors from each other. The color adjustment layer is located closer to the light source than the exterior color layer is. When white light is transmitted through the color adjustment layer and the exterior color layer, the color adjustment layer maintains white color of the white light. FIG 2

No. of Pages : 26 No. of Claims : 6

(12) PATENT APPLICATION PUBLICATION
(21) Application No.202514034876 A
(19) INDIA
(22) Date of filing of Application :09/04/2025
(43) Publication Date : 07/11/2025

(54) Title of the invention : ENDOSCOPY SUPPORT APPARATUS, METHOD OF OPERATING ENDOSCOPY SUPPORT APPARATUS, AND STORAGE MEDIUM

(51) International classification	:A61B0001000000, G06T0007000000, H04L0067303000, G06F0003030000, A61B0034200000	(71)**Name of Applicant :** **1)OLYMPUS MEDICAL SYSTEMS CORP.** Address of Applicant :2951 Ishikawa-machi, Hachioji-shi, Tokyo JAPAN 192-8507 Japan
(31) Priority Document No	:JP2024-064641	(72)**Name of Inventor :** **1)Yoshiko IKEDA** **2)Marina UEZONO**
(32) Priority Date	:12/04/2024	
(33) Name of priority country	:Japan	
(86) International Application No	:NA	
Filing Date	:NA	
(87) International Publication No	: NA	
(61) Patent of Addition to Application Number	:NA	
Filing Date	:NA	
(62) Divisional to Application Number	:NA	
Filing Date	:NA	

(57) Abstract :
An endoscopy support apparatus includes a memory and a processor. The processor is configured to access the memory that stores: a learned model learned by a learning data set in which a name of a part, a visual field direction, and an axis direction are annotated to each of a plurality of endoscopic image; and a name of at least one target part and a positional relationship of a plurality of parts, and the processor inputs a picked-up image into the learned model, to thereby infer the name of the part, the visual field direction, and the axis direction, in the picked-up image, and outputs a direction of the target part in the picked-up image, based on the positional relationship of the plurality of parts, and the name of the part, the visual field direction, and the axis direction, in the picked-up image, which have been inferred.

No. of Pages : 44 No. of Claims : 17

(12) PATENT APPLICATION PUBLICATION
(21) Application No.202514034895 A
(19) INDIA
(22) Date of filing of Application :09/04/2025
(43) Publication Date : 07/11/2025

(54) Title of the invention : AGRICULTURAL SYSTEM AND METHOD FOR CONTROLLING BASE CUTTER OPERATION FOR A HARVESTER

(51) International classification	:A01D0041140000, A01D0045100000, A01D0041127000, G06F0003048200, B01F0035210000
(31) Priority Document No	:10 2024 007187 5
(32) Priority Date	:12/04/2024
(33) Name of priority country	:Brazil
(86) International Application No	:NA
Filing Date	:NA
(87) International Publication No	: NA
(61) Patent of Addition to Application Number	:NA
Filing Date	:NA
(62) Divisional to Application Number	:NA
Filing Date	:NA

(71)**Name of Applicant :**
1)CNH INDUSTRIAL BRASIL LTDA.
Address of Applicant :Alameda Oscar Niemeyer, nº 132, Sala nº 801, Bairro Vale do Sereno, Nova Lima, MG, 34006-049, Brazil Brazil
(72)**Name of Inventor :**
1)JOÃO AUGUSTO MARCOLIN LUCCA

(57) Abstract :
An agricultural system for controlling base cutter operation for an agricultural harvester includes a first base cutter assembly having a first inner disc and a first outer disc. The system also includes a second base cutter assembly having a second inner disc and a second outer disc. The first and second base cutter assemblies are movable relative to each other in a vertical direction. Additionally, the first and second inner discs are positioned relative to each other such that a plurality of blades of the first inner disc circumferentially overlap with a plurality of blades of the second inner disc when the first and second inner discs are disposed at a common vertical position. Moreover, the system includes a computing system configured to control an operation of the first and second base cutter assemblies to prevent contact between the blades of the first and second inner discs.

No. of Pages : 38 No. of Claims : 18

(12) PATENT APPLICATION PUBLICATION
(21) Application No.202514034905 A
(19) INDIA
(22) Date of filing of Application :09/04/2025
(43) Publication Date : 07/11/2025

(54) Title of the invention : DISPLAY APPARATUS AND ELECTRONIC DEVICE

(51) International classification	:H10K0050110000, H10K0101400000, H10K0085600000, C09K0011060000, H05B0033120000	(71)**Name of Applicant :** **1)SAMSUNG DISPLAY CO., LTD.** Address of Applicant :1, Samsung-ro, Giheung-gu, Yongin-si, Gyeonggi-do, 17113, Republic of Korea Republic of Korea (72)**Name of Inventor :** **1)Youngmin Cho** **2)Woosuk Jang**
(31) Priority Document No	:10-2024-0048853	
(32) Priority Date	:11/04/2024	
(33) Name of priority country	:Republic of Korea	
(86) International Application No	:NA	
Filing Date	:NA	
(87) International Publication No	: NA	
(61) Patent of Addition to Application Number	:NA	
Filing Date	:NA	
(62) Divisional to Application Number	:NA	
Filing Date	:NA	

(57) Abstract :
A display apparatus (1) and an electronic device (20) include a display panel (50) 5 including a first area (1A) that is foldable and flat and a second area (2A) that extends from the first area (1A) and is curved, an optical functional layer (42) on the first area (1A) and at least a portion of the second area (2A) and having at least a portion which is curved, a first cover member (11) on the optical functional layer (42) and overlapping the first area (1A), a second cover member (12) on the first cover member (11), overlapping the first 10 area (1A) and the second area (2A), and having at least a portion which is curved, and a housing (90) in which the display panel (50), the optical functional layer (42), the first cover member (11), and the second cover member (12) are accommodated.

No. of Pages : 91 No. of Claims : 29

(12) PATENT APPLICATION PUBLICATION
(21) Application No.202514032421 A
(19) INDIA
(22) Date of filing of Application :01/04/2025
(43) Publication Date : 07/11/2025

(54) Title of the invention : CHARGING INLET

(51) International classification :B60L53/16
(31) Priority Document No :2024-062534
(32) Priority Date :09/04/2024
(33) Name of priority country :Japan
(86) International Application No :NA
Filing Date :NA
(87) International Publication No : NA
(61) Patent of Addition to Application Number :NA
Filing Date :NA
(62) Divisional to Application Number :NA
Filing Date :NA

(71)**Name of Applicant :**
1)YAZAKI CORPORATION
Address of Applicant :8-15, Konan 1-chome, Minato-ku, Tokyo 108-0075, Japan Japan
(72)**Name of Inventor :**
1)SAWAYANAGI, Masahiro
2)HORI, Takahiro
3)SUZUKI, Hiroyuki

(57) Abstract :
A charging inlet 1 includes: an inlet housing 10 having a charging opening 15; an illuminator 20 radiating light La 5 in which the charging opening 15 is located within an irradiation area IA; and a reflective tape 30 attached on an exterior surface 13a of the inlet housing 10 to fit a shape of at least a part of an outer periphery of the charging opening 15 such that the reflective tape 30 is located within the irradiation area IA with the light La radiated from the illuminator 20. The illuminator 20 includes a light source 21 emitting 10 the light La of variable colors, and the light source 21 may emit the light La based on a radiation pattern corresponding to an operation status at the time of charging. 16

No. of Pages : 20 No. of Claims : 5

(12) PATENT APPLICATION PUBLICATION
(21) Application No.202514032425 A
(19) INDIA
(22) Date of filing of Application :01/04/2025
(43) Publication Date : 07/11/2025

(54) Title of the invention : ILLUMINATOR

(51) International classification	:F21Y0115100000, H05B0045200000, G01S0007481000, F21Y0105120000, F21V0007000000
(31) Priority Document No	:2024-062560
(32) Priority Date	:09/04/2024
(33) Name of priority country	:Japan
(86) International Application No	:NA
Filing Date	:NA
(87) International Publication No	: NA
(61) Patent of Addition to Application Number	:NA
Filing Date	:NA
(62) Divisional to Application Number	:NA
Filing Date	:NA

(71)**Name of Applicant :**
1)YAZAKI CORPORATION
Address of Applicant :8-15, Konan 1-chome, Minato-ku, Tokyo 108-0075, Japan Japan
(72)**Name of Inventor :**
1)HORI, Takahiro
2)SUZUKI, Hiroyuki

(57) Abstract :
An illuminator 1 includes: a plurality of light sources 11; and an exterior cover 50 that covers at least a part of a light emission space S by the plurality of light sources 11. The exterior cover 50 includes a first light radiation wall 51a and a second light 5 radiation wall 51b that allow light emitted from the plurality of light sources 11 to pass therethrough to radiate the light to the outside. The first light radiation wall 51a and the second light radiation wall 51b are colorless transparent or milky flat plates and are continuous with each other with a linear ridge 51h therebetween. At least one light source 11 of the plurality of light sources 11 emits light of variable colors. 10 27

No. of Pages : 34 No. of Claims : 7

(12) PATENT APPLICATION PUBLICATION
(19) INDIA
(22) Date of filing of Application :02/04/2025
(21) Application No.202514032467 A
(43) Publication Date : 07/11/2025

(54) Title of the invention : DISPLAY APPARATUS AND ELECTRONIC APPARATUS INCLUDING THE DISPLAY APPARATUS

(51) International classification	:H10K0050110000, H10K0059121000, H10K0050150000, H10K0101400000, H04N0021422000
(31) Priority Document No	:10-2024-0045570
(32) Priority Date	:03/04/2024
(33) Name of priority country	:Republic of Korea
(86) International Application No	:NA
Filing Date	:NA
(87) International Publication No	: NA
(61) Patent of Addition to Application Number	:NA
Filing Date	:NA
(62) Divisional to Application Number	:NA
Filing Date	:NA

(71)**Name of Applicant :**
1)Samsung Display Co., Ltd.
Address of Applicant :1, Samsung-ro, Giheung-gu, Yongin-si, Gyeonggi-do, 17113, Korea Republic of Korea
(72)**Name of Inventor :**
1)Changyeol Lee
2)Jaewon Kim
3)Hansol Kim
4)Jaedu Noh
5)Jaesic Lee
6)Soyoung Jang
7)Youngjin Cho

(57) Abstract :
A display apparatus (1) that may include a substrate (100) that may include an active area (AA) and a dummy area (DA), a pixel circuit (PC) in the active area (AA) and a lightemitting element (E) electrically connected to the pixel circuit (PC) and including a pixel electrode, a dummy circuit (DC) in the dummy area (DA), a repair line (RL) extending in a first direction over the substrate (100), electrically connected to the dummy circuit (DC), and is connectable to the light-emitting element (E), a pixel connection electrode overlapping the repair line (RL) and electrically connected to the pixel electrode, and a voltage transfer line (1610) overlapping the repair line (RL), spaced apart from the pixel connection electrode, and configured to transfer a voltage to the pixel circuit (PC), wherein an area of a portion of the voltage transfer line (1610) overlapping the repair line (RL) may be greater than an area of a portion of the pixel connection electrode overlapping the repair line (RL).

No. of Pages : 100 No. of Claims : 22

(12) PATENT APPLICATION PUBLICATION
(19) INDIA
(22) Date of filing of Application :02/04/2025
(21) Application No.202514032549 A
(43) Publication Date : 07/11/2025

(54) Title of the invention : SATELLITE MODEL GENERATION SYSTEM

(51) International classification	:H04N0021610000, G01S0019420000, G06T0017000000, H01Q0003080000, B64G0001220000
(31) Priority Document No	:18/632,022
(32) Priority Date	:10/04/2024
(33) Name of priority country	:U.S.A.
(86) International Application No	:NA
Filing Date	:NA
(87) International Publication No	: NA
(61) Patent of Addition to Application Number	:NA
Filing Date	:NA
(62) Divisional to Application Number	:NA
Filing Date	:NA

(71)**Name of Applicant :**
1)The Boeing Company
Address of Applicant :929 Long Bridge Drive, Arlington, VA 22202, U.S.A. U.S.A.
(72)**Name of Inventor :**
1)GERWE, David Roderick
2)OKKELBERG, Klaus Zhang
3)HERMOSILLO, Marisol Gomez

(57) Abstract :
A method for satellite model generation includes generating a plurality of satellite generation values based on an input seed value. Using a satellite model generation system, a plurality of different three-dimensional (3D) satellite models are generated, wherein the plurality of different 3D satellite models differ according to a plurality of satellite configuration parameters, and wherein, for each 3D satellite model of the plurality of different 3D satellite models, the satellite configuration parameters of the 3D satellite model are determined based at least in part on the plurality of satellite generation values and a plurality of configuration plausibility constraints of the satellite model generation system. The plurality of different three-dimensional (3D) satellite models are output.

No. of Pages : 51 No. of Claims : 15

(12) PATENT APPLICATION PUBLICATION
(21) Application No.202514028059 A
(19) INDIA
(22) Date of filing of Application :25/03/2025
(43) Publication Date : 07/11/2025

(54) Title of the invention : DUCT FOR AFTERTREATMENT SYSTEM

(51) International classification	:F01N0003200000, F01N0003100000, F01N0011000000, F01N0013000000, B66B0011000000
(31) Priority Document No	:18/636,439
(32) Priority Date	:16/04/2024
(33) Name of priority country	:U.S.A.
(86) International Application No	:NA
Filing Date	:NA
(87) International Publication No	: NA
(61) Patent of Addition to Application Number	:NA
Filing Date	:NA
(62) Divisional to Application Number	:NA
Filing Date	:NA

(71)**Name of Applicant :**
1)CATERPILLAR INC.
Address of Applicant :100 NE Adams StreetPeoria, Illinois 61629-6450, United States of America U.S.A.
(72)**Name of Inventor :**
1)BISWAS, Shib Shankar

(57) Abstract :
A duct for an aftertreatment system includes a body defining a first end and a second end and a flange coupled to the body at the first end of the body. The flange defines an outer edge. The duct includes a projection coupled to and extending from the flange along a first direction. The projection and the flange lie in a same plane. The projection defines a first side edge and a second side edge that is angularly spaced apart from the first side edge. The duct is adapted to be coupled with a component of the aftertreatment system via each of the outer edge of the flange, the first side edge of the projection, and the second side edge of the projection. The component includes at least one of a diesel oxidation catalyst of the aftertreatment system and a selective catalytic reduction module of the aftertreatment system.

No. of Pages : 24 No. of Claims : 7

(12) PATENT APPLICATION PUBLICATION
(21) Application No.202514028298 A
(19) INDIA
(22) Date of filing of Application :26/03/2025
(43) Publication Date : 07/11/2025

(54) Title of the invention : DETERMINATION FOR UPLINK REPETITIONS

(51) International classification	:H04L0001080000, C07K0016300000, H04L0001186700, A61P0029000000, G11B0020120000
(31) Priority Document No	:PCT/CN2024/087349
(32) Priority Date	:11/04/2024
(33) Name of priority country	:PCT
(86) International Application No	:NA
Filing Date	:NA
(87) International Publication No	: NA
(61) Patent of Addition to Application Number	:NA
Filing Date	:NA
(62) Divisional to Application Number	:NA
Filing Date	:NA

(71)**Name of Applicant :**
1)Nokia Technologies Oy
Address of Applicant :Karakaari 7, FI – 02610 Espoo, FINLAND Finland
(72)**Name of Inventor :**
1)NHAT-QUANG NHAN
2)MARCO MASO
3)KARIM KASAN
4)ALESSIO MARCONE
5)JING YUAN SUN
6)JIE GAO
7)GUILLERMO POCOVI
8)YOUNGSOO YUK
9)SHEYAM LAL DHOMEJA

(57) Abstract :
Example embodiments of the present disclosure relate to a solution for determining a set of physical random access channel (PRACH) occasions. In the solution, a first apparatus receives, from a second apparatus, configuration information indicating a plurality of PRACH occasions comprising PRACH occasions in uplink resource and PRACH occasions in sub-band non-overlapping full-duplex (SBFD) resource; determines, based on the configuration information, and for each frequency resource index for frequency multiplexed PRACH occasions, a starting PRACH occasion of a set of PRACH occasions for a PRACH transmission with preamble repetitions from the PRACH occasions in uplink resource and the PRACH occasions in SBFD resource, and performs, to the second apparatus, the PRACH transmission based at least in part on the starting PRACH occasion of the set.

No. of Pages : 70 No. of Claims : 43

(12) PATENT APPLICATION PUBLICATION
(21) Application No.202514028380 A
(19) INDIA
(22) Date of filing of Application :26/03/2025
(43) Publication Date : 07/11/2025

(54) Title of the invention : FILTER PLATE AND RELATED TRANSPORT METHOD

(51) International classification	:B01D0025172000, B01D0025210000, B01D0025280000, G06F0001200000, B01D0025120000
(31) Priority Document No	:119360
(32) Priority Date	:01/04/2024
(33) Name of priority country	:Portugal
(86) International Application No	:NA
Filing Date	:NA
(87) International Publication No	: NA
(61) Patent of Addition to Application Number	:NA
Filing Date	:NA
(62) Divisional to Application Number	:NA
Filing Date	:NA

(71)**Name of Applicant :**
1)DRY TECH Unipessoal Lda
Address of Applicant :Avenida marechal Gomes da Costa 630, 4150355 - Porto, Portugal, Portugal
(72)**Name of Inventor :**
1)LIMONTA, Alessandro

(57) Abstract :
Filter plate (1) for a filter press, and related transport method, the filter plate (1) comprising: - a main body (2) having a contour comprising a first and a second side (4, 5) opposite to each other, - at least one first secondary body (8) comprising at least one first opening (10) passing through a direction orthogonal to a main development plane (3) of the filter plate (1) to realize a portion of a first fluid conduit when the filter plate is in use in the filter press, wherein the first secondary body (8) is removably attachable to the main body (2) at the first side (4). [FIG. 2]

No. of Pages : 20 No. of Claims : 10

(12) PATENT APPLICATION PUBLICATION
(21) Application No.202514028766 A
(19) INDIA
(22) Date of filing of Application :26/03/2025
(43) Publication Date : 07/11/2025

(54) Title of the invention : DUCT FOR AFTERTREATMENT SYSTEM

(51) International classification	:F01N0003200000, A61B0017880000, H02G0003060000, A61N0001050000, F04D0025140000	(71)**Name of Applicant :** **1)CATERPILLAR INC.** Address of Applicant :100 NE Adams StreetPeoria, Illinois 61629-6450, United States of America U.S.A. (72)**Name of Inventor :** **1)BISWAS, Shib Shankar**
(31) Priority Document No	:18/636,453	
(32) Priority Date	:16/04/2024	
(33) Name of priority country	:U.S.A.	
(86) International Application No	:NA	
Filing Date	:NA	
(87) International Publication No	: NA	
(61) Patent of Addition to Application Number	:NA	
Filing Date	:NA	
(62) Divisional to Application Number	:NA	
Filing Date	:NA	

(57) Abstract :
A duct for an aftertreatment system includes a body defining an inlet opening, an outlet opening, and an inner surface extending from the inlet opening to the outlet opening. The duct includes a plurality of locating pads coupled to the inner surface of the body. Any one of the plurality of locating pads defines a slot. The duct includes a mixing device coupled to the body and including a plurality of first elongate members, a plurality of second elongate members, and a plurality of mixing elements. The duct includes at least one first locating member coupled to a corresponding first elongate member and at least one second locating member coupled to a corresponding second elongate member. Any one of the at least one first locating member and the at least one second locating member includes a projection.

No. of Pages : 27 No. of Claims : 10

(12) PATENT APPLICATION PUBLICATION
(21) Application No.202517039607 A
(19) INDIA
(22) Date of filing of Application :24/04/2025
(43) Publication Date : 07/11/2025

(54) Title of the invention : NOVEL PRMT5 INHIBITOR AND USE THEREOF

(51) International classification	:C07D 471/14, C07D 487/04, C07D 519/00, A61K 31/519, A61K 31/536
(31) Priority Document No	:202211173943.5
(32) Priority Date	:26/09/2022
(33) Name of priority country	:China
(86) International Application No	:PCT/CN2023/120923
Filing Date	:25/09/2023
(87) International Publication No	:WO 2024/067433
(61) Patent of Addition to Application Number	:NA
Filing Date	:NA
(62) Divisional to Application Number	:NA
Filing Date	:NA

(71)**Name of Applicant :**
1)SHANGHAI APEIRON THERAPEUTICS COMPANY LIMITED
Address of Applicant :Unit C101, 1976 Gaoke Zhong Road, Pilot Free Trade Zone Pudong New Area, Shanghai 201210 China
(72)**Name of Inventor :**
1)YAO, Bing
2)GU, Xiaohui

(57) Abstract :
The present invention describes a novel molecule with inhibitory activity against protein arginine methyltransferase and methods for synthesis and use of the compound. Specifically, the present invention describes a compound of formula (I) or a pharmaceutically acceptable salt thereof, a hydrate therof, or a solvate thereof, and methods for synthesis and use of the compound.

No. of Pages : 127 No. of Claims : 32

(12) PATENT APPLICATION PUBLICATION
(19) INDIA
(22) Date of filing of Application :17/03/2025
(21) Application No.202514023502 A
(43) Publication Date : 07/11/2025

(54) Title of the invention : CATALYST DEVICE

(51) International classification	:F01N0003280000, B32B0003120000, F01N0003035000, B01D0053940000, F01N0003200000
(31) Priority Document No	:2024-058338
(32) Priority Date	:30/03/2024
(33) Name of priority country	:Japan
(86) International Application No	:NA
Filing Date	:NA
(87) International Publication No	: NA
(61) Patent of Addition to Application Number	:NA
Filing Date	:NA
(62) Divisional to Application Number	:NA
Filing Date	:NA

(71)**Name of Applicant :**
1)HONDA MOTOR CO., LTD.
Address of Applicant :1-1, Minami-Aoyama 2-chome, Minato-ku, Tokyo, 107-8556 Japan Japan
2)GOSHI GIKEN CO., LTD.
(72)**Name of Inventor :**
1)IWASA, Akiko
2)KIMURA, Toshiaki
3)KISHI, Nobuyuki
4)MAEDA, Kazuhisa
5)TAKEDA, Hiromitsu
6)ENDO, Takeshi
7)SHIGENO, Genki
8)UZAWA, Yuki
9)OKOGE, Kazuya
10)FUKUMURA, Shohachi

(57) Abstract :
A catalyst device (30) for purifying exhaust gas (G) by passing the exhaust gas (G) through a honeycomb core (31, 31a, 31b, 31c, 31d) includes: the honeycomb core (31, 31a, 31b, 31c, 31d) including a metallic foil (40) supporting a catalyst and wound. A portion of the metallic foil (40) has a plurality of through holes (H). The honeycomb core (31, 31a, 31b, 31c, 31d) has a dense region (A) where the through holes (H) are densely formed, a zero region (B) where no through hole (H) is formed, and a boundary region (C) between the dense region (A) and the zero region (B) in an axial direction in which the exhaust gas (G) flows. The boundary region (C) is configured such that a total area of the through holes (H) in the boundary region (C) decreases gradually from near the dense region (A) toward the zero region (B).

No. of Pages : 30 No. of Claims : 6

(12) PATENT APPLICATION PUBLICATION
(21) Application No.202517044687 A
(19) INDIA
(22) Date of filing of Application :08/05/2025
(43) Publication Date : 07/11/2025

(54) Title of the invention : CRYSTAL FORM OF ACLONIFEN AND PREPARATION METHOD AND USE OF CRYSTAL FORM

(51) International classification :C07C217/90
(31) Priority Document No :202410383942.6
(32) Priority Date :01/04/2024
(33) Name of priority country :China
(86) International Application No :PCT/CN2024/087918
Filing Date :16/04/2024
(87) International Publication No :WO 2025/208664
(61) Patent of Addition to Application Number :NA
Filing Date :NA
(62) Divisional to Application Number :NA
Filing Date :NA

(71)**Name of Applicant :**
1)YIFAN BIOTECHNOLOGY (SHANGHAI) CO., LTD.
Address of Applicant :Room 601, Floor 6, No. 4, Lane 268, Linxin Road, Changning District Shanghai 200050 China
(72)**Name of Inventor :**
1)WANG, Pandeng
2)WU, Haiqin
3)WU, Kechong
4)JIA, Junchao
5)GUO, Kaijie
6)WANG, Jia

(57) Abstract :
The present invention discloses a crystal form of aclonifen, and a preparation method therefor and the use thereof. In the present invention, a crystal form of aclonifen is obtained by recrystallizing amorphous aclonifen, and is referred as solid form A of aclonifen. In the present invention, the crystal is analyzed by means of various analytical methods, and solid form A of aclonifen is used to prepare a stable agrochemical formulation. The preparation method for solid form A of aclonifen provided by the present invention has a high recovery rate, is simple and convenient, and can be scaled up. Moreover, the crystal form, i.e., solid form A of aclonifen, is highly stable when used for formulation of a preparation, and thus has good application prospects.

No. of Pages : 17 No. of Claims : 10

(12) PATENT APPLICATION PUBLICATION
(21) Application No.202517051781 A
(19) INDIA
(22) Date of filing of Application :29/05/2025
(43) Publication Date : 07/11/2025

(54) Title of the invention : NONAQUEOUS ELECTROLYTE AND LITHIUM SECONDARY BATTERY COMPRISING SAME

(51) International classification	:H01M 10/0567, H01M 10/052
(31) Priority Document No	:10-2023-0046159
(32) Priority Date	:07/04/2023
(33) Name of priority country	:Republic of Korea
(86) International Application No	:PCT/KR2024/095684
Filing Date	:04/04/2024
(87) International Publication No	:WO 2024/210729
(61) Patent of Addition to Application Number	:NA
Filing Date	:NA
(62) Divisional to Application Number	:NA
Filing Date	:NA

(71)**Name of Applicant :**
1)LG ENERGY SOLUTION, LTD.
Address of Applicant :Tower 1, 108, Yeoui-daero Yeongdeungpo-gu Seoul 07335 Republic of Korea
(72)**Name of Inventor :**
1)BAEK, Ga Young
2)LEE, Chul Haeng
3)LEE, Kyung Mi
4)LEE, Jung Min
5)JI, Su Hyeon
6)YEOM, Chul Eun
7)CHO, Yoon Gyo

(57) Abstract :
The present invention provides a nonaqueous electrolyte comprising: a lithium salt; an organic solvent; a compound, as a first additive, represented by chemical formula 1; and a compound, as a second additive, represented by chemical formula 2 or chemical formula 3. [Chemical formula 1] In chemical formula 1, R is any one selected from among a C1-C5 perfluoroalkyl group, a C2-C10 alkenyl group, and a C2-C10 alkynyl group. [Chemical formula 2] In chemical formula 2, R1 is a C1-C3 alkylene group that can be substituted with fluorine, and R2 to R4 are each independently any one selected from the group consisting of H, a C1-C3 alkyl group, and a nitrile group. [Chemical formula 3] In chemical formula 3, R5 is a C1-C8 alkylene group that can be substituted with fluorine, and R6 is any one selected from the group consisting of H, a C1-C10 alkyl group, and a C3-C8 cycloalkyl group.

No. of Pages : 38 No. of Claims : 13

(12) PATENT APPLICATION PUBLICATION
(21) Application No.202517051901 A
(19) INDIA
(22) Date of filing of Application :29/05/2025
(43) Publication Date : 07/11/2025

(54) Title of the invention : POWER CONTROL DEVICE FOR ON-VEHICLE SOLAR PANEL

(51) International classification	:H02J 7/35, B60R 16/04, H02J 1/00, H02J 7/00
(31) Priority Document No	:2023-152025
(32) Priority Date	:20/09/2023
(33) Name of priority country	:Japan
(86) International Application No	:PCT/JP2024/013432
Filing Date	:01/04/2024
(87) International Publication No	:WO 2025/062705
(61) Patent of Addition to Application Number	:NA
Filing Date	:NA
(62) Divisional to Application Number	:NA
Filing Date	:NA

(71)**Name of Applicant :**
1)NITERRA CO., LTD.
Address of Applicant :1-1-1, Higashisakura, Higashi-ku, Nagoya-shi, Aichi 4610005 Japan
(72)**Name of Inventor :**
1)KUMAZAWA Shinji
2)HISADA Kaoru
3)SAKATA Yuichi
4)YAMAMOTO Koji
5)GOTO Yuichi

(57) Abstract :
A power control device (14) for an on-vehicle solar panel comprises a switch unit (20) and a control unit (24). The control unit (24) switches the switch unit (20) between a supply state and a cut-off state. The control unit (24) monitors the generated power of a solar panel (13) in a state in which a battery management system (12) is stopped, maintains the switch unit (20) in the cut-off state when the generated power of the solar panel (13) falls below a threshold value set to be greater than or equal to the power required for starting the battery management system (12), and switches the switch unit (20) to the supply state when the generated power of the solar panel (13) is greater than or equal to the threshold value.

No. of Pages : 17 No. of Claims : 9

(12) PATENT APPLICATION PUBLICATION
(21) Application No.202514017857 A
(19) INDIA
(22) Date of filing of Application :28/02/2025
(43) Publication Date : 07/11/2025

(54) Title of the invention : MODIFYING DATA USING LARGE LANGUAGE MODELS

(51) International classification	:G02B0027010000, H02P0025060000, G06F0040180000, H04N0021488000, H04L0012180000
(31) Priority Document No	:18/630,727
(32) Priority Date	:09/04/2024
(33) Name of priority country	:U.S.A.
(86) International Application No	:NA
Filing Date	:NA
(87) International Publication No	: NA
(61) Patent of Addition to Application Number	:NA
Filing Date	:NA
(62) Divisional to Application Number	:NA
Filing Date	:NA

(71)**Name of Applicant :**
1)SAP SE
Address of Applicant :Dietmar-Hopp-Allee 16, 69190 Walldorf, Germany Germany
(72)**Name of Inventor :**
1)Christian Denkel
2)Patric Ksinsik

(57) Abstract :
In an example embodiment, rather than send the state of the UI screen as a whole to an LLM to generate or modify one or more values on the UI screen, the identifiers and data types of data on the UI screen are gathered and sent to the LLM. The LLM is instructed to return a list of expressions that define what needs to be done to satisfy a user prompt. The calling process then evaluates the list of expressions to actually manipulate the data content.

No. of Pages : 32 No. of Claims : 14

(12) PATENT APPLICATION PUBLICATION
(21) Application No.202514017961 A
(19) INDIA
(22) Date of filing of Application :28/02/2025
(43) Publication Date : 07/11/2025

(54) Title of the invention : COMMUNICATION METHOD, MEDIUM, MODULE, PHOTOVOLTAIC CLEANING DEVICE AND NETWORKING SYSTEM

(51) International classification	:H02S0040100000, B08B0013000000, B08B0001320000, H02J0003380000, H01L0025000000
(31) Priority Document No	:202410317 102X
(32) Priority Date	:20/03/2024
(33) Name of priority country	:China
(86) International Application No	:NA
Filing Date	:NA
(87) International Publication No	: NA
(61) Patent of Addition to Application Number	:NA
Filing Date	:NA
(62) Divisional to Application Number	:NA
Filing Date	:NA

(71)**Name of Applicant :**
1)Xiamen Lanxu Intelligent Technology Co., Ltd
Address of Applicant :Room 101, No. 65 Hongxi South Road, Torch (xiang'an) Industrial Zone, Xiamen, Fujian 361000, China China
(72)**Name of Inventor :**
1)Jingci LI
2)Lijun HUANG

(57) Abstract :
The present invention discloses a communication method, a medium, a module, a photovoltaic cleaning device and networking system. The method includes: S1: dividing a plurality of frequency point information in the frequency band used by a node device to report data to obtain a plurality of frequency point sets; where each node device corresponds to a frequency point set, each frequency point set includes at least one frequency point information, and frequency point information contained in different frequency point sets is different; S2: when the node device accesses a gateway, randomly selecting one frequency point information from the frequency point set corresponding to the node device as the frequency point information corresponding to the current node device; S3: reporting relevant data of the current node device through the selected frequency point information at the preset period. Through the above solution, since different node devices can share the same frequency band but use different frequency points in the same frequency band, uplink data does not interfere with each other, and the multiplexing of the gateway is improved.

No. of Pages : 30 No. of Claims : 10

(12) PATENT APPLICATION PUBLICATION
(21) Application No.202514018135 A
(19) INDIA
(22) Date of filing of Application :28/02/2025
(43) Publication Date : 07/11/2025

(54) Title of the invention : ITERATIVE GENERATION OF INTERMEDIATE REPRESENTATIONS WITH LARGE LANGUAGE MODELS

(51) International classification	:G06F0008410000, G06F0009440000, G06F0008200000, G06Q0040040000, H02P0025060000
(31) Priority Document No	:18/623,784
(32) Priority Date	:01/04/2024
(33) Name of priority country	:U.S.A.
(86) International Application No	:NA
Filing Date	:NA
(87) International Publication No	: NA
(61) Patent of Addition to Application Number	:NA
Filing Date	:NA
(62) Divisional to Application Number	:NA
Filing Date	:NA

(71)**Name of Applicant :**
1)SAP SE
Address of Applicant :Dietmar-Hopp-Allee 16, 69190 Walldorf, Germany Germany
(72)**Name of Inventor :**
1)David Kunz

(57) Abstract :
In an example embodiment, a framework is provided to allow an LLM to regenerate an intermediate representation based on natural language feedback that is provided on the compilable computer code that was generated using the programmatic component from an earlier intermediate representation. The user is able to provide this feedback without having any knowledge of the intermediate representation and the framework is designed to allow the LLM to incorporate this feedback into future generation requests without the LLM being aware of the compilable computer code that was created from its prior iterations.

No. of Pages : 35 No. of Claims : 14

(12) PATENT APPLICATION PUBLICATION
(21) Application No.202517052515 A
(19) INDIA
(22) Date of filing of Application :30/05/2025
(43) Publication Date : 07/11/2025

(54) Title of the invention : NONAQUEOUS ELECTROLYTE AND SECONDARY LITHIUM BATTERY COMPRISING SAME

(51) International classification	:H01M 10/0567, H01M 10/0568, H01M 10/0569, H01M 10/052, H01M 4/38
(31) Priority Document No	:10-2023-0046365
(32) Priority Date	:07/04/2023
(33) Name of priority country	:Republic of Korea
(86) International Application No	:PCT/KR2024/004504
Filing Date	:05/04/2024
(87) International Publication No	:WO 2024/210609
(61) Patent of Addition to Application Number	:NA
Filing Date	:NA
(62) Divisional to Application Number	:NA
Filing Date	:NA

(71)**Name of Applicant :**
1)LG ENERGY SOLUTION, LTD.
Address of Applicant :Tower 1, 108, Yeoui-daero Yeongdeungpo-gu Seoul 07335 Republic of Korea
(72)**Name of Inventor :**
1)CHO, Yoon Gyo
2)LEE, Jung Min
3)LEE, Chul Haeng
4)LEE, Kyung Mi
5)BAEK, Ga Young
6)JI, Su Hyeon
7)YEOM, Chul Eun

(57) Abstract :
The present invention relates to a nonaqueous electrolyte comprising a lithium salt, an organic solvent, and additives, wherein the additives include a first additive and a second additive, and the first additive and the second additive each comprise a compound represented by a specific chemical formula.

No. of Pages : 46 No. of Claims : 20

(12) PATENT APPLICATION PUBLICATION
(21) Application No.202517057792 A
(19) INDIA
(22) Date of filing of Application :16/06/2025
(43) Publication Date : 07/11/2025

(54) Title of the invention : DRUG FORMULATIONS OF (R)-1-(1-ACRYLOYLPIPERIDIN-3-YL)-4-AMINO-3-(4- PHENOXYPHENYL)-1H-IMIDAZO[4,5-C]PYRIDIN-2(3H)-ONE

(51) International classification	:A61K 9/20, A61K 31/407, A61K 31/4188, A61K 31/437, A61K 47/12
(31) Priority Document No	:63/433824
(32) Priority Date	:20/12/2022
(33) Name of priority country	:U.S.A.
(86) International Application No	:PCT/US2023/084784
Filing Date	:19/12/2023
(87) International Publication No	:WO 2024/137604
(61) Patent of Addition to Application Number	:NA
Filing Date	:NA
(62) Divisional to Application Number	:NA
Filing Date	:NA

(71)**Name of Applicant :**
1)PRINCIPIA BIOPHARMA INC.
Address of Applicant :55 Corporate Drive Bridgewater, New Jersey 08807 U.S.A.
(72)**Name of Inventor :**
1)CALDERONE, Marilyn
2)VIAULT, Caroline

(57) Abstract :
This disclosure relates to the field of therapeutic Bruton's tyrosine kinase (BTK) inhibitors. Pharmaceutical formulations of (R)-1-(1-acryloylpiperidin-3-yl)-4-amino-3-(4-phenoxyphenyl)-1H-imidazo[4,5-c]pyridin-2(3H)-one are described.

No. of Pages : 67 No. of Claims : 90

(12) PATENT APPLICATION PUBLICATION
(21) Application No.202514036936 A
(19) INDIA
(22) Date of filing of Application :16/04/2025
(43) Publication Date : 07/11/2025

(54) Title of the invention : GYROPLANE TAKE-OFF ROTOR

(51) International classification	:B64C0027020000, B64U0010100000, H04L0009400000, B64C0027350000, B64C0027480000
(31) Priority Document No	:24382397.8
(32) Priority Date	:16/04/2024
(33) Name of priority country	:EPO
(86) International Application No	:NA
Filing Date	:NA
(87) International Publication No	: NA
(61) Patent of Addition to Application Number	:NA
Filing Date	:NA
(62) Divisional to Application Number	:NA
Filing Date	:NA

(71)**Name of Applicant :**
1)ELA AVIACION, S.L.
Address of Applicant :Pol. Ind .EL BLANQUILLO, M7 P26, 14290 FUENTE OBEJUNA, (Córdoba), SPAIN Spain
(72)**Name of Inventor :**
1)LÓPEZ SÁNCHEZ, Emilio José

(57) Abstract :
A rotor for gyroplane take-off, wherein the gyroplane comprises two blades (1), two blade holders (2), and a prelauncher device linked to the rotor via a transmission. The rotor comprises a mechanism attachable to the transmission, which comprises: - a linear actuator (3); - a tie rod (4), linked to the linear actuator (3); - a vertical bar (5), linked to the tie rod (4); - a rocker arm (6) hinged at an upper end of the vertical bar (5); - two rods (7) hinged to the respective ends of the rocker arm (6) and extending downwards; and - a elastic element (8) for holding the blade holders (2), and the blades (1) in flight position at a high angle of attack. The rotor allows a temporary reduction of the angle of attack of the blades (1) to shorten the take-off run.

No. of Pages : 15 No. of Claims : 7

(12) PATENT APPLICATION PUBLICATION
(21) Application No.202517041916 A
(19) INDIA
(22) Date of filing of Application :30/04/2025
(43) Publication Date : 07/11/2025

(54) Title of the invention : COIL ASSEMBLY

(51) International classification	:H01F 27/22, H01F 27/28, H05K 1/02, H05K 1/18, H01F 17/06
(31) Priority Document No	:10 2023 203 239.2
(32) Priority Date	:06/04/2023
(33) Name of priority country	:Germany
(86) International Application No	:PCT/EP2024/058952
Filing Date	:02/04/2024
(87) International Publication No	:WO 2024/208834
(61) Patent of Addition to Application Number	:NA
Filing Date	:NA
(62) Divisional to Application Number	:NA
Filing Date	:NA

(71)**Name of Applicant :**
1)ROBERT BOSCH GMBH
Address of Applicant :Postfach 30 02 20 70442 Stuttgart Germany
(72)**Name of Inventor :**
1)WALKER, Jan
2)JACOBS, Heiner
3)MEYER, Moritz
4)TANCZOS, Gellert

(57) Abstract :
The invention relates to a coil assembly (1) comprising a circuit carrier (2), an electric coil (5), the winding (7) of which is wound around a magnet core (6) and engages through an inner opening (6.1), and a cooling assembly (10), wherein at least two windings (8) each have an electrically conductive conductor piece (8.1) with two end pieces (8.2, 8.3) which are each inserted into an electric via (4) and contacted, wherein the cooling assembly (10) has, on a surface of the circuit carrier (2) facing the coil, in the region of the magnet core (6), a plurality of first line structures (3, 11), which are thermally coupled, via at least one thermal via (12), to a plurality of associated second line structures (13, 14) on a surface of the circuit carrier (2) facing away from the coil, wherein the first line structures (3, 11) are spaced apart from one another and are each connected to at least one of the electric vias (4), and the second line structures (13, 14) are spaced apart from one another and are thermally coupled to at least one cooling element (18) located on the surface of the circuit carrier (2) facing away from the coil, so that in each case one cooling path is formed between the end pieces (8.2, 8.3), which are contacted with the corresponding electric vias (4), of the at least two windings (8) and the at least one cooling element (18).

No. of Pages : 16 No. of Claims : 15

(12) PATENT APPLICATION PUBLICATION
(21) Application No.202517049025 A
(19) INDIA
(22) Date of filing of Application :21/05/2025
(43) Publication Date : 07/11/2025

(54) Title of the invention : METHODS AND COMPOSITIONS FOR TARGETED DELIVERY BY POLYMERSOMES

(51) International classification	:A61K 47/34, A61K 31/155, A61K 31/702, A61K 31/7028, A61K 47/26
(31) Priority Document No	:63/458102
(32) Priority Date	:08/04/2023
(33) Name of priority country	:U.S.A.
(86) International Application No	:PCT/US2024/023586
Filing Date	:08/04/2024
(87) International Publication No	:WO 2024/215612
(61) Patent of Addition to Application Number	:NA
Filing Date	:NA
(62) Divisional to Application Number	:NA
Filing Date	:NA

(71)**Name of Applicant :**
1)ROCK BIOMEDICAL INC.
Address of Applicant :Rm. 301, Bldg. A, No. 99, Ln. 130, Sec. 1 Academia Rd., Nangang Dist. Taipei City, 115202 Taiwan
(72)**Name of Inventor :**
1)LEE, Jeng Shin
2)WONG, Chi-Huey
3)FAN, Chen-Yo
4)WANG, Szu-Wen

(57) Abstract :
The present disclosure relates to a copolymer and a polymersome for targeted delivery of biomolecules to a living organism. Hie exemplary copolymer comprises an initiator block, a propagator block, and a linkage connecting the initiator block and the propagator block. The initiator block comprises a glycan head configured to provide a targeted delivery, and the propagator block comprises a functional moiety configured to provide desired properties for the polymersome.

No. of Pages : 87 No. of Claims : 30

(12) PATENT APPLICATION PUBLICATION
(21) Application No.202517056695 A
(19) INDIA
(22) Date of filing of Application :12/06/2025
(43) Publication Date : 07/11/2025

(54) Title of the invention : SOLID DOSAGE FORMS OF A PLASMA KALLIKREIN INHIBITOR

(51) International classification	:A61K 31/395, A61K 31/415, A61K 31/166, A61K 31/33
(31) Priority Document No	:63/384641
(32) Priority Date	:22/11/2022
(33) Name of priority country	:U.S.A.
(86) International Application No	:PCT/US2023/080635
Filing Date	:21/11/2023
(87) International Publication No	:WO 2024/112719
(61) Patent of Addition to Application Number	:NA
Filing Date	:NA
(62) Divisional to Application Number	:NA
Filing Date	:NA

(71)**Name of Applicant :**
1)REZOLUTE, INC.
Address of Applicant :201 Redwood Shores Pkwy., Suite 315 Redwood City, California 94065 U.S.A.
(72)**Name of Inventor :**
1)BURKE, Michael
2)BREIT, Jeffrey
3)WALD, Randy
4)STEINHAUFF, William

(57) Abstract :
Described herein are high loading, stable solid dosage forms of a plasma kallikrein inhibitor, 1-benzyl-1H-pyrazole-4-carboxylic acid 4-carbamimidoylbenzylamide (Compound 1) or a pharmaceutically acceptable salt thereof. Methods of treatment of patients that will benefit from the effects of a plasma kallikrein inhibitor are also disclosed.

No. of Pages : 35 No. of Claims : 94

(12) PATENT APPLICATION PUBLICATION
(21) Application No.202517058866 A
(19) INDIA
(22) Date of filing of Application :19/06/2025
(43) Publication Date : 07/11/2025

(54) Title of the invention : ELECTRODE ASSEMBLY AND METHOD FOR MANUFACTURING SAME

(51) International classification	:H01M 10/0583, H01M 50/46, H01M 50/466, H01M 4/62
(31) Priority Document No	:10-2023-0052674
(32) Priority Date	:21/04/2023
(33) Name of priority country	:Republic of Korea
(86) International Application No	:PCT/KR2024/095750
Filing Date	:17/04/2024
(87) International Publication No	:WO 2024/219950
(61) Patent of Addition to Application Number	:NA
Filing Date	:NA
(62) Divisional to Application Number	:NA
Filing Date	:NA

(71)**Name of Applicant :**
1)LG ENERGY SOLUTION, LTD.
Address of Applicant :Tower1, Yeoui-daero 108 Yeongdeungpo-gu, Seoul 07335 Republic of Korea
(72)**Name of Inventor :**
1)KIM, Hye Won
2)LEE, Ji Su
3)SUNG, Dong Wook
4)KA, Kyung Ryun

(57) Abstract :
The present invention relates to an electrode assembly and a method for manufacturing same and, more specifically, to: an electrode assembly that is configured to include a single-sided positive electrode, and is manufactured at low pressure and temperature to prevent battery life deterioration caused by Li-precipitation and an increase in resistance; and a method for manufacturing same.

No. of Pages : 35 No. of Claims : 12

(12) PATENT APPLICATION PUBLICATION
(21) Application No.202514025128 A
(19) INDIA
(22) Date of filing of Application :20/03/2025
(43) Publication Date : 07/11/2025

(54) Title of the invention : VARIABLE TEMPERATURE SENSOR

(51) International classification	:A61M0005310000, A61B0090000000, H04R0025000000, F21V0008000000, G01B0011250000
(31) Priority Document No	:18/627,360
(32) Priority Date	:04/04/2024
(33) Name of priority country	:U.S.A.
(86) International Application No	:NA
Filing Date	:NA
(87) International Publication No	: NA
(61) Patent of Addition to Application Number	:NA
Filing Date	:NA
(62) Divisional to Application Number	:NA
Filing Date	:NA

(71)**Name of Applicant :**
1)CATERPILLAR INC.
Address of Applicant :100 NE Adams StreetPeoria, Illinois 61629-6450, United States of America U.S.A.
(72)**Name of Inventor :**
1)DUFFER, Bradly Glen
2)POLOWINCZAK, Allen
3)MASLOV, Alexey
4)TAKANG, Samson T.
5)GANESAN, Chandrasekar

(57) Abstract :
A sensor assembly may include a housing and a probe tube, disposed in the housing, that is positionally adjustable within the housing to dictate a length of a portion of the probe tube that protrudes from the housing. The sensor assembly may include a conversion component disposed in the housing. The conversion component may be configured to convert an input signal into an application-specific output signal.

No. of Pages : 21 No. of Claims : 10

(12) PATENT APPLICATION PUBLICATION
(21) Application No.202514025580 A
(19) INDIA
(22) Date of filing of Application :20/03/2025
(43) Publication Date : 07/11/2025

(54) Title of the invention : ASSEMBLY FOR A VEHICLE

(51) International classification	:G02B6/00, B60Q1/00	(71)**Name of Applicant :**
(31) Priority Document No	:102024110096.6	**1)WEBASTO SE**
(32) Priority Date	:11/04/2024	Address of Applicant :Kraillinger Straße 5 82131 Stockdorf, Germany (DE) Germany
(33) Name of priority country	:Germany	(72)**Name of Inventor :**
(86) International Application No	:NA	**1)Georg Rossmair**
Filing Date	:NA	
(87) International Publication No	: NA	
(61) Patent of Addition to Application Number	:NA	
Filing Date	:NA	
(62) Divisional to Application Number	:NA	
Filing Date	:NA	

(57) Abstract :
An assembly (1) for a vehicle (100), comprising at least one light source (80), and a light guiding element (10) having an outer surface (11), wherein the light guiding element (10) is coupled with the at least one light source (80), and wherein the light guiding element (10) is configured to guide light fed in by the at least one light source (80) and provide it for a specified illumination of a vehicle interior. The assembly (1) furthermore comprises a reflection layer (20), which has a first main surface (21) and a second main surface (22), which is opposite to the first main surface (21) along a stack direction (L1), wherein the reflection layer (20) is arranged at least partially on the outer surface (11) of the light guiding element (10), the second main surface (22) faces toward the outer surface (11), so that light is reflected in a first section (25) of a boundary layer (15) between the outer surface (11) and the reflection layer (20), and at least one decoupling element (30), which is capable of decoupling light from the light guiding element (10) in a second section (35) of the boundary layer (15) between the outer surface (11) and the decoupling element (30).
Figure 2

No. of Pages : 18 No. of Claims : 11

(12) PATENT APPLICATION PUBLICATION
(21) Application No.202517029947 A
(19) INDIA
(22) Date of filing of Application :28/03/2025
(43) Publication Date : 07/11/2025

(54) Title of the invention : STORAGE-STABLE COMPOSITIONS INCLUDING BIXLOZONE AND B EFLUB UT AMID

(51) International classification :C12Q 1/6883
(31) Priority Document No :63/413009
(32) Priority Date :04/10/2022
(33) Name of priority country :U.S.A.
(86) International Application No :PCT/IB2023/059717
Filing Date :28/09/2023
(87) International Publication No :WO 2024/074953
(61) Patent of Addition to Application Number :NA
Filing Date :NA
(62) Divisional to Application Number :NA
Filing Date :NA

(71)**Name of Applicant :**
1)FMC CORPORATIO N
Address of Applicant :2929 Walnut Street City Philadelphia, State Pennsylvania Country USA Pin Code 19104 U.S.A.
(72)**Name of Inventor :**
1)PALANICHAM Y, Krishnan
2)SATO, Takahiro
3)ODDOS, Thierry
4)HOURIHANE, Jonathan
5)IRVINE, Alan D.
6)INSEL, Richard A.

(57) Abstract :
A method to predict a propensity of an infant to develop atopic dermatitis. The method includes observing the expression of S100A8/A9 on a skin area of an infant; comparing the expression to determined standard, wherein the determined standard is ascertained by measuring a level of the biomarker in a subject or pool of subjects who have demonstrated an absence of atopic dermatitis; and determining the propensity of an infant to develop atopic dermatitis, wherein an increase in the expression as compared to the determined standard indicates propensity of the infant to develop atopic dermatitis.

No. of Pages : 17 No. of Claims : 10

(12) PATENT APPLICATION PUBLICATION
(21) Application No.202517043820 A
(19) INDIA
(22) Date of filing of Application :06/05/2025
(43) Publication Date : 07/11/2025

(54) Title of the invention : CYLINDRICAL BATTERY, AND BATTERY PACK AND VEHICLE INCLUDING SAME

(51) International classification	:H01M 50/152, H01M 50/167, H01M 50/342, H01M 50/538, H01M 50/213
(31) Priority Document No	:10-2023-0059395
(32) Priority Date	:08/05/2023
(33) Name of priority country	:Republic of Korea
(86) International Application No	:PCT/KR2024/004440
Filing Date	:04/04/2024
(87) International Publication No	:WO 2024/232545
(61) Patent of Addition to Application Number	:NA
Filing Date	:NA
(62) Divisional to Application Number	:NA
Filing Date	:NA

(71)**Name of Applicant :**
1)LG ENERGY SOLUTION, LTD.
Address of Applicant :Tower1, 108, Yeoui-daero, Yeongdeungpo-Gu, Seoul 07335 Republic of Korea
(72)**Name of Inventor :**
1)CHOI, Su-Ji
2)LEE, Da-Som
3)KO, Kwang-Hun
4)KIM, Do-Gyun
5)YOUN, Young-Suk
6)HWANGBO, Kwang-Su

(57) Abstract :
The present invention provides a cylindrical battery structured to incur less deformation due to crimping pressure when undergoing crimping during battery manufacturing. The cylindrical battery according to one aspect of the invention comprises: an electrode assembly including a first electrode and a second electrode; a battery housing for accommodating the electrode assembly through an opening part formed in the top thereof; and a top cap which covers the opening part, and which includes an edge area, a central area positioned relatively more inward than the edge area, and a bent area that is positioned between the edge area and the central area and that has a first bent part having a downwardly-bent protruding shape.

No. of Pages : 17 No. of Claims : 15

(12) PATENT APPLICATION PUBLICATION
(21) Application No.202517060297 A
(19) INDIA
(22) Date of filing of Application :24/06/2025
(43) Publication Date : 07/11/2025

(54) Title of the invention : VEHICLE ROOF ASSEMBLY COMPRISING A PANE WITH A LIGHT GUIDE LAYER

(51) International classification	:B60Q 3/208, B60Q 3/64, B60Q 3/51, B62D 25/06, B32B 17/10
(31) Priority Document No	:10 2023 102 556.2
(32) Priority Date	:02/02/2023
(33) Name of priority country	:Germany
(86) International Application No	:PCT/EP2024/051543
Filing Date	:23/01/2024
(87) International Publication No	:WO 2024/160600
(61) Patent of Addition to Application Number	:NA
Filing Date	:NA
(62) Divisional to Application Number	:NA
Filing Date	:NA

(71)**Name of Applicant :**
1)WEBASTO SE
Address of Applicant :Kraillinger Str. 5 82131 Stockdorf Germany
(72)**Name of Inventor :**
1)DIETL, Rudolf

(57) Abstract :
The invention relates to a vehicle roof assembly comprising a pane body assembly (20) which has an exterior-side face facing the vehicle surroundings and an interior-side face facing the vehicle interior and which has a light guide layer, a light source (36), the light of which can be coupled into the light guide layer, and a shading assembly (14) that comprises at least one guide rail (18) for a shading element, wherein the guide rail (18) rests against the interior-side face of the pane body assembly (20) and delimits a receiving chamber (34) for the light source (38), said receiving chamber being delimited by the pane body assembly (20).

No. of Pages : 9 No. of Claims : 11

(12) PATENT APPLICATION PUBLICATION
(21) Application No.202517021413 A
(19) INDIA
(22) Date of filing of Application :10/03/2025
(43) Publication Date : 07/11/2025

(54) Title of the invention : A METHOD AND APPLICATION OF A MODEL USED TO INCREASE RAINFALL AND ATMOSPHERIC HUMIDITY IN AREAS SELECTED ACCORDING TO TEMPERATURE PRESSURE AND RELATIVE HUMIDITY GRADIENTS

(51) International classification	:A01G 13/06, A01G 15/00, A01G 25/16, F03B 13/00, F03B 13/12
(31) Priority Document No	:21892022
(32) Priority Date	:11/08/2022
(33) Name of priority country	:Chile
(86) International Application No	:PCT/CL2023/050072
Filing Date	:09/08/2023
(87) International Publication No	:WO 2024/031205
(61) Patent of Addition to Application Number	:NA
Filing Date	:NA
(62) Divisional to Application Number	:NA
Filing Date	:NA

(71)**Name of Applicant :**
1)GONZÁLEZ VARAS, Rodrigo Javier
Address of Applicant :Jardín del Edén City Santiago de Chile State Country Chile Pin Code 8271562 Chile
(72)**Name of Inventor :**
1)GONZÁLEZ VARAS, Rodrigo Javier

(57) Abstract :
The present invention relates to a method and model used to increase atmospheric humidity in coastal areas with a lack of rainfall. The invention more specifically relates to the practical application of a method and device for generating and guiding atmospheric fluxes with a high water vapour load and delivering it to areas where it is required by means of both natural and artificial condensing mechanisms according to the selected route.

No. of Pages : 9 No. of Claims : 9

(12) PATENT APPLICATION PUBLICATION
(21) Application No.202517044121 A
(19) INDIA
(22) Date of filing of Application :07/05/2025
(43) Publication Date : 07/11/2025

(54) Title of the invention : BATTERY DEVICE

(51) International classification	:B60L 58/10, B60L 53/80, G08B 13/00, G08B 25/08
(31) Priority Document No	:2023-063057
(32) Priority Date	:07/04/2023
(33) Name of priority country	:Japan
(86) International Application No	:PCT/JP2024/013412
Filing Date	:01/04/2024
(87) International Publication No	:WO 2024/210080
(61) Patent of Addition to Application Number	:NA
Filing Date	:NA
(62) Divisional to Application Number	:NA
Filing Date	:NA

(71)**Name of Applicant :**
1)GLOBAL MOBILITY SERVICE INC.
Address of Applicant :4F Gran First, 15 Kandakonya-cho, Chiyoda-ku, Tokyo 1010035 Japan
(72)**Name of Inventor :**
1)HASHIMOTO Nobuyuki
2)HAGISHIMA Koichi
3)NAKASHIMA Tokushi

(57) Abstract :
The purpose of the present invention is to identify stolen position information. A battery device 10 according to one embodiment comprises: a detection unit 15A that detects that the battery device 10 has been removed from an electric vehicle 1; and a communication unit 15B that transmits, to a server 20, position information pertaining to the battery device 10 when the detection unit 15A has detected that the battery device 10 has been removed from the electric vehicle 1.

No. of Pages : 18 No. of Claims : 5

(12) PATENT APPLICATION PUBLICATION
(21) Application No.202517058662 A
(19) INDIA
(22) Date of filing of Application :18/06/2025
(43) Publication Date : 07/11/2025

(54) Title of the invention : NOOTKATONE FOR THE TREATMENT OF PRURITUS

(51) International classification	:A61K 9/00, A61K 31/122, A61K 47/42, A61P 17/02, A61P 17/04
(31) Priority Document No	:63/430325
(32) Priority Date	:05/12/2022
(33) Name of priority country	:U.S.A.
(86) International Application No	:PCT/US2023/082590
Filing Date	:05/12/2023
(87) International Publication No	:WO 2024/123824
(61) Patent of Addition to Application Number	:NA
Filing Date	:NA
(62) Divisional to Application Number	:NA
Filing Date	:NA

(71)**Name of Applicant :**
1)ENVEDA THERAPEUTICS, INC.
Address of Applicant :5700 Flatiron Parkway Boulder, Colorado 80301 U.S.A.
(72)**Name of Inventor :**
1)COLLURU, Viswa
2)WEE, Daniel
3)GAETZ, Matthew
4)GORDON, Hannah
5)YU, Marvin
6)DEEG, Mark

(57) Abstract :
The present disclosure relates generally to compounds, compositions, and methods for treating pruritus using a therapeutically effective amount of nootkatone, a pharmaceutically acceptable salt or derivative thereof. Methods of formulating and using the compositions are also provided.

No. of Pages : 137 No. of Claims : 22

(12) PATENT APPLICATION PUBLICATION
(19) INDIA
(22) Date of filing of Application :19/06/2025
(21) Application No.202517058834 A
(43) Publication Date : 07/11/2025

(54) Title of the invention : CYTOTOXIC COMPOUNDS

(51) International classification	:A61K0047680000, A61P0035000000, A61K0039395000, C07K0007230000, A61K0038010000
(31) Priority Document No	:63/387426
(32) Priority Date	:14/12/2022
(33) Name of priority country	:U.S.A.
(86) International Application No	:PCT/IB2023/062733
Filing Date	:14/12/2023
(87) International Publication No	:WO 2024/127332
(61) Patent of Addition to Application Number	:NA
Filing Date	:NA
(62) Divisional to Application Number	:NA
Filing Date	:NA

(71)**Name of Applicant :**
1)PHEON THERAPEUTICS LTD
Address of Applicant :Rothamsted Research, West Common Harpenden Hertfordshire AL5 2JQ U.K.
(72)**Name of Inventor :**
1)ANDRIOLLO, Paolo
2)PROCOPIOU, George
3)JACKSON, Paul

(57) Abstract :
The present disclosure provides, inter alia, glycosylated compounds and conjugates thereof useful for treating cancer.

No. of Pages : 306 No. of Claims : 32

(12) PATENT APPLICATION PUBLICATION
(21) Application No.202517061132 A
(19) INDIA
(22) Date of filing of Application :26/06/2025
(43) Publication Date : 07/11/2025

(54) Title of the invention : METHOD AND APPARATUS FOR HANDOVER OF USER EQUIPMENT IN NES CELL IN A NEXT GENERATION MOBILE COMMUNICATION SYSTEM

(51) International classification	:H04W 36/16, H04W 36/36, H04W 36/00, H04W 76/28
(31) Priority Document No	:63/494426
(32) Priority Date	:05/04/2023
(33) Name of priority country	:U.S.A.
(86) International Application No	:PCT/KR2024/004184
Filing Date	:01/04/2024
(87) International Publication No	:WO 2024/210433
(61) Patent of Addition to Application Number	:NA
Filing Date	:NA
(62) Divisional to Application Number	:NA
Filing Date	:NA

(71)**Name of Applicant :**
1)SAMSUNG ELECTRONICS CO., LTD.
Address of Applicant :129, Samsung-ro, Yeongtong-gu, Suwon-si, Gyeonggi-do 16677 Republic of Korea
(72)**Name of Inventor :**
1)JUNG, Byounghoon
2)AGIWAL, Anil
3)BAEK, Sangkyu
4)HWANG, June

(57) Abstract :
This invention discloses a handover method and apparatus of a terminal according to the status of a terminal and network in an NES system. The method comprises receiving, from a base station, configuration information for a con#ditional handover (CHO) including trigger condition information for the CHO, identifying whether the trigger condition information includes in#formation indicating that an event for a trigger condition is associated with network energy saving (NES), in case that the trigger condition information includes the information, identifying whether an indication for a NES mode is received from the base station, in case that the indication for the NES mode is received, identifying whether the event for the trigger condition is satisfied based on a reception of the indication, and in case that the event for the trigger condition is satisfied, performing a CHO procedure.

No. of Pages : 35 No. of Claims : 15

(12) PATENT APPLICATION PUBLICATION
(21) Application No.202517064526 A
(19) INDIA
(22) Date of filing of Application :07/07/2025
(43) Publication Date : 07/11/2025

(54) Title of the invention : A SEX SPECIFIC MARKER FOR PRAWNS

(51) International classification :C12Q 1/6888
(31) Priority Document No :PI2022006870
(32) Priority Date :06/12/2022
(33) Name of priority country :Malaysia
(86) International Application No :PCT/MY2024/050007
Filing Date :05/02/2024
(87) International Publication No :WO 2024/123171
(61) Patent of Addition to Application Number :NA
Filing Date :NA
(62) Divisional to Application Number :NA
Filing Date :NA

(71)**Name of Applicant :**
1)GK AQUA SDN. BHD.
Address of Applicant :Lot 5602-5603, Jalan Haiwan, Ladang 100 Ekar, Port Dickson, 71960 Malaysia
(72)**Name of Inventor :**
1)KUPPUSAMY, Giva

(57) Abstract :
A primer pair comprising the nucleotide sequence as set forth in SEQ ID NO:1 and SEQ ID NO:2, wherein the primer pair is a PCR-based molecular marker and wherein the marker is a sex-specific marker for prawns. Use of PCR-based molecular marker of the present invention for determining the sex in prawns. A method of setting up a male monosex culture in prawns, comprising a PCR-based sex determination, whereby said PCR-based sex determination comprises the use of PCR-based molecular marker of the present invention.

No. of Pages : 12 No. of Claims : 6

(12) PATENT APPLICATION PUBLICATION
(21) Application No.202517059727 A
(19) INDIA
(22) Date of filing of Application :23/06/2025
(43) Publication Date : 07/11/2025

(54) Title of the invention : ELECTROLYTE FOR LITHIUM-SULFUR BATTERY AND LITHIUM-SULFUR BATTERY CONTAINING SAME

(51) International classification	:H01M 10/0567, H01M 4/38, H01M 10/0569
(31) Priority Document No	:10-2023-0046347
(32) Priority Date	:07/04/2023
(33) Name of priority country	:Republic of Korea
(86) International Application No	:PCT/KR2024/004261
Filing Date	:02/04/2024
(87) International Publication No	:WO 2024/210472
(61) Patent of Addition to Application Number	:NA
Filing Date	:NA
(62) Divisional to Application Number	:NA
Filing Date	:NA

(71)**Name of Applicant :**
1)LG ENERGY SOLUTION, LTD.
Address of Applicant :Tower1, 108, Yeoui-daero, Yeongdeungpo-Gu, Seoul 07335 Republic of Korea
2)KOREA ADVANCED INSTITUTE OF SCIENCE AND TECHNOLOGY
(72)**Name of Inventor :**
1)PARK, Seong-Hyo
2)KIM, Hee-Tak
3)LEE, Chang-Hoon
4)JUNG, Jin-Kwan
5)CHO, Hye-Nah

(57) Abstract :
The present invention relates to an electrolyte for use in lithium-sulfur batteries, which includes a Lewis acidic additive containing cations with higher Lewis acidity than lithium ions. This configuration inhibits the leaching of polysulfides into the electrolyte, improves the ionic conductivity of the electrolyte, and enhances sulfur utilization, thereby providing advantageous effects for the stable operation of lithium-sulfur batteries with lean electrolyte and high capacity.

No. of Pages : 32 No. of Claims : 16

(12) PATENT APPLICATION PUBLICATION
(21) Application No.202517062753 A
(19) INDIA
(22) Date of filing of Application :01/07/2025
(43) Publication Date : 07/11/2025

(54) Title of the invention : ELECTRONIC DEVICE FOR CONTROLLING TARGET POWER ACCORDING TO INPUT POWER OF POWER SUPPLY CIRCUIT AND CONTROL METHOD THEREOF

(51) International classification	:H05B 6/06, H05B 6/12
(31) Priority Document No	:10-2023-0044924
(32) Priority Date	:05/04/2023
(33) Name of priority country	:Republic of Korea
(86) International Application No	:PCT/KR2024/004525
Filing Date	:05/04/2024
(87) International Publication No	:WO 2024/210622
(61) Patent of Addition to Application Number	:NA
Filing Date	:NA
(62) Divisional to Application Number	:NA
Filing Date	:NA

(71)**Name of Applicant :**
1)SAMSUNG ELECTRONICS CO., LTD.
Address of Applicant :129, Samsung-ro, Yeongtong-gu Suwon-si Gyeonggi-do 16677 Republic of Korea
(72)**Name of Inventor :**
1)KIM, Dongwook
2)SHIN, Jaehee
3)KANG, Hongjoo
4)CHOI, Jiwoong
5)HWANG, Kumchul

(57) Abstract :
An electronic device is disclosed. The electronic device comprises: a cooking plate on which a cooking vessel can be placed; an induction heating coil which induces a magnetic field on the cooking plate; a power supply circuit which supplies power to the induction heating coil; a memory in which at least one instruction is stored; and a processor which controls the power supply circuit on the basis of the at least one stored instruction, wherein the processor: controls the power supply circuit on the basis of first target power for heating the cooking vessel; and if the difference between first input power of the power supply circuit and the first target power is equal to or greater than a predetermined value, controls the power supply circuit on the basis of second target power corresponding to the first input power of the power supply circuit.

No. of Pages : 49 No. of Claims : 15

(12) PATENT APPLICATION PUBLICATION
(21) Application No.202517062848 A
(19) INDIA
(22) Date of filing of Application :01/07/2025
(43) Publication Date : 07/11/2025

(54) Title of the invention : COMPUTER-IMPLEMENTED METHOD FOR OPEN-LOOP AND/OR CLOSED-LOOP CONTROL OF A SINGLE-COMPRESSOR STATION HAVING A COMPRESSOR

(51) International classification :G05D 23/19
(31) Priority Document No :10 2022 132 033.2
(32) Priority Date :02/12/2022
(33) Name of priority country :Germany
(86) International Application No :PCT/EP2023/080594
Filing Date :02/11/2023
(87) International Publication No :WO 2024/115035
(61) Patent of Addition to Application Number :NA
Filing Date :NA
(62) Divisional to Application Number :NA
Filing Date :NA

(71)**Name of Applicant :**
1)KAESER KOMPRESSOREN SE COBURG
Address of Applicant :Carl-Kaeser-Str. 26 96450 Coburg Germany
(72)**Name of Inventor :**
1)WAGNER, Florian
2)SPRÜGEL, Tobias

(57) Abstract :
The invention relates to a computer-implemented method for open-loop and/or closed-loop control of a single-compressor station having a compressor (C1), wherein the single-compressor station is intended to keep a detected actual pressure in a pressurized fluid system in a pressure interval between an upper pressure limit and a lower pressure limit. A tree structure having nodes (5 to 10) in the form of simulated system states is generated from simulated load commands, wherein, for immediately subsequent time points ti+1 (i=1... n-1) proceeding from the selected system states at the time point ti, different load commands and the system states resulting therefrom are simulated, wherein invalid system states are deleted, wherein a prevailing actual pressure is assigned a system state pressure class, wherein a control state of the compressor that is to be expected at the time point ti+1 is determined and is assigned a control state class, wherein, for each system state, the system state which has a lowest cost value is selected, wherein, from all nodes (5 to 10) selected at the time point tn, the load command which has the lowest cost function is selected, and wherein the load command at the time point t1 which has been stored in relation to said selected load command is transmitted to the compressor (C1).

No. of Pages : 24 No. of Claims : 14

(12) PATENT APPLICATION PUBLICATION
(21) Application No.202517065517 A
(19) INDIA
(22) Date of filing of Application :09/07/2025
(43) Publication Date : 07/11/2025

(54) Title of the invention : ARRANGEMENT OF A DISPLAY SYSTEM IN A DASHBOARD OF A MOTOR VEHICLE

(51) International classification	:B60K 35/00, B60K 37/00, B60K 35/22, B60K 35/50, B60K 35/53
(31) Priority Document No	:FR2301628
(32) Priority Date	:22/02/2023
(33) Name of priority country	:France
(86) International Application No	:PCT/EP2024/053506
Filing Date	:12/02/2024
(87) International Publication No	:WO 2024/175411
(61) Patent of Addition to Application Number	:NA
Filing Date	:NA
(62) Divisional to Application Number	:NA
Filing Date	:NA

(71)**Name of Applicant :**
1)RENAULT S.A.S.
Address of Applicant :122-122 bis avenue du Général Leclerc 92100 Boulogne Billancourt France
(72)**Name of Inventor :**
1)CHAPUIS, Claude-Emman
2)DAGOREAU, Alain

(57) Abstract :
The invention relates to an arrangement (1) of a display system in a dashboard, which comprises a cavity (20), a translucent plate (3), and a recess (25) which is located in the lower wall (22) of the cavity. The recess includes an opening (250) which opens into the cavity and receives a source screen (40) which constitutes a light source directed towards the inside of the cavity and which is the display screen of an electronic mobile device (4) capable of being received in the recess (25). The translucent plate includes a first free transverse edge (301), which is secured at the top of the cavity and positioned towards the opening (24) of the cavity, and a second free transverse edge (302), the plate being rotatably movable about the first transverse edge (301) thereof between a retracted high position (31) and an extended position (32) inside the cavity at an adjustable angle of inclination (T) with respect to the position of the source screen in the recess.

No. of Pages : 8 No. of Claims : 10

(12) PATENT APPLICATION PUBLICATION
(21) Application No.202517045604 A
(19) INDIA
(22) Date of filing of Application :12/05/2025
(43) Publication Date : 07/11/2025

(54) Title of the invention : LITHIUM SECONDARY BATTERY

(51) International classification	:H01M 10/0567, H01M 4/525, H01M 4/505, H01M 10/0569, H01M 10/052
(31) Priority Document No	:1020230046337
(32) Priority Date	:07/04/2023
(33) Name of priority country	:Republic of Korea
(86) International Application No	:PCT/KR2024/004496
Filing Date	:05/04/2024
(87) International Publication No	:WO 2024/210604
(61) Patent of Addition to Application Number	:NA
Filing Date	:NA
(62) Divisional to Application Number	:NA
Filing Date	:NA

(71)**Name of Applicant :**
1)LG ENERGY SOLUTION LTD.
Address of Applicant :Tower 1 108 Yeoui daero Yeongdeungpo gu Seoul 07335 Republic of Korea
(72)**Name of Inventor :**
1)JI Su Hyeon
2)LEE Chul Haeng
3)LEE Jung Min
4)BAEK Ga Young
5)YEOM Chul Eun

(57) Abstract :
The present invention is characterized by comprising: a positive electrode; a negative electrode; a separator disposed between the positive electrode and the negative electrode; and a non aqueous electrolyte wherein the positive electrode includes a positive electrode active material including a lithium transition metal oxide represented by a specific chemical formula and the non aqueous electrolyte includes a lithium salt an organic solvent and additives including a first additive and a second additive. The first additive includes a phosphate based additive containing a silyl group and the second additive includes a compound represented by a specific chemical formula.

No. of Pages : 50 No. of Claims : 20

(12) PATENT APPLICATION PUBLICATION
(21) Application No.202517055898 A
(19) INDIA
(22) Date of filing of Application :10/06/2025
(43) Publication Date : 07/11/2025

(54) Title of the invention : FERRITIC STAINLESS STEEL

(51) International classification	:C22C 38/00, C22C 38/26
(31) Priority Document No	:NA
(32) Priority Date	:NA
(33) Name of priority country	:NA
(86) International Application No	:PCT/JP2024/012410
Filing Date	:27/03/2024
(87) International Publication No	:WO 2025/203366
(61) Patent of Addition to Application Number	:NA
Filing Date	:NA
(62) Divisional to Application Number	:NA
Filing Date	:NA

(71)**Name of Applicant :**
1)KABUSHIKI KAISHA RIKEN
Address of Applicant :8-1, Sanbancho, Chiyoda-ku, Tokyo 1028202 Japan
(72)**Name of Inventor :**
1)INAZUMI Toru
2)KURATOMI Toshiyuki

(57) Abstract :
The purpose of the present invention is to provide a ferritic stainless steel that is excellent in terms of oxidation resistance and workability. The present invention provides a ferritic stainless steel which has a component composition that contains, in mass%, specific amounts of Cr, Al, S, C, N, O, and Nb, with the balance being made up of Fe and unavoidable impurities, wherein the content ratio of Al and Cr satisfies the relationships of formulae (1) and (2). (1): 2Al + Cr = 41, (2): Al + Cr = 23

No. of Pages : 12 No. of Claims : 7

(12) PATENT APPLICATION PUBLICATION
(21) Application No.202517058198 A
(19) INDIA
(22) Date of filing of Application :17/06/2025
(43) Publication Date : 07/11/2025

(54) Title of the invention : BLOCKCHAIN-BASED ASSET AUTHENTICATION METHODS AND SYSTEMS

(51) International classification	:G06F 16/20, G06F 16/27, H04L 9/32, H04L 9/00, G06Q 10/0835
(31) Priority Document No	:63/428889
(32) Priority Date	:30/11/2022
(33) Name of priority country	:U.S.A.
(86) International Application No	:PCT/US2023/081967
Filing Date	:30/11/2023
(87) International Publication No	:WO 2024/119005
(61) Patent of Addition to Application Number	:NA
Filing Date	:NA
(62) Divisional to Application Number	:NA
Filing Date	:NA

(71)**Name of Applicant :**
1)STEEL AMERICAN LUXURY LLC
Address of Applicant :314 Walnut Street Winnetka, Illinois 60093 U.S.A.
2)STEEL, Nicole
(72)**Name of Inventor :**
1)STEEL, Nicole

(57) Abstract :
Systems and methods for blockchain-based asset authentication are described. The disclosed embodiments leverage the traceability and immutability of blockchains (or distributed ledgers, in general) to enable the authentication and ownership of assets, e.g., luxury goods. In an example, this is achieved by first pairing an authentication chip with a physical product, and writing a transaction correlated with the first pairing to a blockchain. The product being acquired (reacquired) results in the blockchain being updated (e.g., an updated transaction being written to the blockchain) and the (subsequent) owner being provided with a digital passport that can be added to the owner's digital Web3 wallet. The described embodiments advantageously enable digital identities to be associated with physical goods, which adds value for customers making a long-term investment in a luxury good, and promotes sustainability and transparency in manufacturing and retail processes.

No. of Pages : 40 No. of Claims : 40

(12) PATENT APPLICATION PUBLICATION
(21) Application No.202517063691 A
(19) INDIA
(22) Date of filing of Application :03/07/2025
(43) Publication Date : 07/11/2025

(54) Title of the invention : METHODS OF TREATING SARCOIDOSIS WITH A TNF-A- ANTIBODY AND ASSOCIATED COMPOSITIONS AND METHODS

(51) International classification	:A61K 39/395, C07K 16/24, C07K 16/28, A61P 29/00
(31) Priority Document No	:63/431607
(32) Priority Date	:09/12/2022
(33) Name of priority country	:U.S.A.
(86) International Application No	:PCT/US2023/083191
Filing Date	:08/12/2023
(87) International Publication No	:WO 2024/124177
(61) Patent of Addition to Application Number	:NA
Filing Date	:NA
(62) Divisional to Application Number	:NA
Filing Date	:NA

(71)**Name of Applicant :**
1)XENTRIA, INC.
Address of Applicant :2071 North Southport Ave. Suite 201 Chicago, Illinois 60614 U.S.A.
(72)**Name of Inventor :**
1)ANDERSON, Kirsten
2)MATTHEWS, Thomas
3)SHEA, Tom
4)SINGH, Noopur

(57) Abstract :
Provided are compositions comprising an anti-TNFa antibody sialylated with one or more N-acetylneuraminic acid molecules, and associated methods. In some embodiments, provided are methods for treating or preventing sarcoidosis and/or granuloma size or formation in patients in need thereof.

No. of Pages : 216 No. of Claims : 26

(12) PATENT APPLICATION PUBLICATION
(21) Application No.202517094439 A
(19) INDIA
(22) Date of filing of Application :01/10/2025
(43) Publication Date : 07/11/2025

(54) Title of the invention : VIDEO ENCODING METHOD AND APPARATUS, VIDEO DECODING METHOD AND APPARATUS, DEVICE, SYSTEM, AND STORAGE MEDIUM

(51) International classification :H04N 19/61
(31) Priority Document No :NA
(32) Priority Date :NA
(33) Name of priority country :NA
(86) International Application No :PCT/CN2023/080155
Filing Date :07/03/2023
(87) International Publication No :WO 2024/183007
(61) Patent of Addition to Application Number :NA
Filing Date :NA
(62) Divisional to Application Number :NA
Filing Date :NA

(71)**Name of Applicant :**
1)GUANGDONG OPPO MOBILE TELECOMMUNICATIONS CORP., LTD.
Address of Applicant :No. 18, Haibin Road, Wusha, Chang'an Dongguan, Guangdong 523860 China
(72)**Name of Inventor :**
1)XU, Luhang

(57) Abstract :
The present application provides a video encoding method and apparatus, a video decoding method and apparatus, a device, a system, and a storage medium. When an intra-frame prediction mode candidate list is constructed, first angle precision corresponding to the intra-frame prediction mode candidate list is firstly determined, wherein the first angle precision is used for indicating a search range of an angle prediction mode in the intra-frame prediction mode candidate list. Then, the intra-frame prediction mode candidate list is constructed on the basis of the first angle precision. Therefore, the present application avoids the loss of angle precision, improves the construction accuracy of the intra-frame prediction mode candidate list. Therefore, when prediction is performed on the basis of the accurately constructed intra-frame prediction mode candidate list, the prediction accuracy of a current block can be improved, thereby improving the video encoding and decoding effects.

No. of Pages : 130 No. of Claims : 26

(12) PATENT APPLICATION PUBLICATION
(21) Application No.202517094440 A
(19) INDIA
(22) Date of filing of Application :01/10/2025
(43) Publication Date : 07/11/2025

(54) Title of the invention : DISPENSER FOR DISPENSING A FLUID

(51) International classification :B05B 11/10
(31) Priority Document No :102023000006456
(32) Priority Date :03/04/2023
(33) Name of priority country :Italy
(86) International Application No :PCT/IB2024/052929
Filing Date :27/03/2024
(87) International Publication No :WO 2024/209309
(61) Patent of Addition to Application Number :NA
Filing Date :NA
(62) Divisional to Application Number :NA
Filing Date :NA

(71)**Name of Applicant :**
1)APTAR ITALIA S.P.A.
Address of Applicant :Via Po, 49- Zona Ind.le Sambuceto 66020 San Giovanni Teatino (CH) Italy
(72)**Name of Inventor :**
1)CARTA, Lamberto
2)CAMPLONE, Fabrizio

(57) Abstract :
Described is a dispenser (1) for dispensing a fluid comprising a containing body (2) which can be inserted in a bottle, a ring nut (9) which can be screwed on the neck of the bottle and a dispensing head (13). The dispenser (1) also comprises a piston (6) slidable inside the containing body (2) and a hollow stem (3) associated below the piston (6). Inside the containing body (2) there is a concertina-like deformable element (7), defining a return spring, the concertina-like deformable element (7) being made of plastic material.

No. of Pages : 13 No. of Claims : 18

(12) PATENT APPLICATION PUBLICATION
(21) Application No.202517094451 A
(19) INDIA
(22) Date of filing of Application :01/10/2025
(43) Publication Date : 07/11/2025

(54) Title of the invention : EXTERIOR MATERIAL FOR POWER STORAGE DEVICE, PRODUCTION METHOD FOR SAME, AND POWER STORAGE DEVICE

(51) International classification	:H01M 50/134, H01G 11/78, H01G 11/84, H01M 10/0562, H01M 50/105
(31) Priority Document No	:2023-046077
(32) Priority Date	:22/03/2023
(33) Name of priority country	:Japan
(86) International Application No	:PCT/JP2024/011517
Filing Date	:22/03/2024
(87) International Publication No	:WO 2024/195875
(61) Patent of Addition to Application Number	:NA
Filing Date	:NA
(62) Divisional to Application Number	:NA
Filing Date	:NA

(71)**Name of Applicant :**
1)DAI NIPPON PRINTING CO., LTD.
Address of Applicant :1-1, Ichigaya Kagacho 1-chome, Shinjuku-ku, Tokyo 1628001 Japan
(72)**Name of Inventor :**
1)OKANO, Ai
2)SASAKI, Miho

(57) Abstract :
Provided is an exterior material for a power storage device, the exterior material being formed from a laminate comprising at least a base material layer, a barrier layer, and a thermally-fusible resin layer in this order from the outside, and the exterior material having a tensile strength at break of 180 MPa or greater as measured by the method below, and having a creep resistance characteristic of 10 minutes or more as measured by the method below. Measurement of tensile strength at break Each tensile strength at break in the machine direction (MD) of the exterior material for the power storage device is measured by a method compliant with the provisions of JIS K7127:1999 by using a tensile tester. The measurement conditions are such that a dumbbell 7 shape is used for a sample shape, the distance between target lines is 10 mm, the tensile speed is 0.5 mm/min, the test environment is set to a temperature of 120ºC, and the average value from three measurements is used. Measurement of creep resistance characteristic The exterior material for a power storage device is cut out so as to have a width of 60 mm in the transverse direction (TD) and a length of 150 mm in the MD direction and is then folded in half such that the thermally-fusible resin layer is positioned at the inside. The folded exterior material is then heat sealed using a 7 mm heat seal bar at a position 10 mm from the fold such that the thickness of the thermally-fusible resin layer is in a range of 60-95% the thickness prior to sealing. The resulting heat-sealed exterior material for a power storage device is then cut to a width of 15 mm to form a sample. Both of the mutually opposing ends of the sample are affixed to respective SUS plates (stainless steel plates) by using an adhesive, and a weight of 2 kg is applied to one side. The end on the opposite side is hung from the top of a thermostatic bath and stored in the thermostatic bath at 150ºC. The creep resistance is evaluated using the time until the sealed part opens. The SUS plates that are used have a thickness of 2 mm, a width of 30 mm, a length of 100 mm, and a weight of 42.5 g, and one side of the SUS plates is S-shaped.

No. of Pages : 104 No. of Claims : 15

(12) PATENT APPLICATION PUBLICATION
(21) Application No.202517094465 A
(19) INDIA
(22) Date of filing of Application :01/10/2025
(43) Publication Date : 07/11/2025

(54) Title of the invention : POUCHED PRODUCT

(51) International classification	:B32B 3/26, B32B 5/02, B32B 5/26, B32B 7/05, A24B 13/00
(31) Priority Document No	:23166621.5
(32) Priority Date	:04/04/2023
(33) Name of priority country	:EPO
(86) International Application No	:PCT/EP2024/059195
Filing Date	:04/04/2024
(87) International Publication No	:WO 2024/208972
(61) Patent of Addition to Application Number	:NA
Filing Date	:NA
(62) Divisional to Application Number	:NA
Filing Date	:NA

(71)**Name of Applicant :**
1)SWEDISH MATCH NORTH EUROPE AB
Address of Applicant :118 85 Stockholm Sweden
(72)**Name of Inventor :**
1)ELFSTRAND, Andreas

(57) Abstract :
A pouched product for oral use, comprising a saliva-permeable pouch and a filling material contained by the pouch. The pouch comprises a first nonwoven enclosing the filling material, and a second nonwoven surrounding the first nonwoven. One or more opening(s) is/are provided in the second nonwoven, through which opening(s) the first nonwoven is exposed.

No. of Pages : 21 No. of Claims : 15

(12) PATENT APPLICATION PUBLICATION
(21) Application No.202517094466 A
(19) INDIA
(22) Date of filing of Application :01/10/2025
(43) Publication Date : 07/11/2025

(54) Title of the invention : DETECTION METHOD FOR DETECTING ALARM OBJECTS IN PIECES OF LUGGAGE

(51) International classification	:G01V 5/22, G01V 5/222
(31) Priority Document No	:10 2023 202 195.1
(32) Priority Date	:10/03/2023
(33) Name of priority country	:Germany
(86) International Application No	:PCT/IB2024/052389
Filing Date	:12/03/2024
(87) International Publication No	:WO 2024/189540
(61) Patent of Addition to Application Number	:NA
Filing Date	:NA
(62) Divisional to Application Number	:NA
Filing Date	:NA

(71)**Name of Applicant :**
1)SMITHS DETECTION GERMANY GMBH
Address of Applicant :Im Herzen 4 65205 Wiesbaden Germany
(72)**Name of Inventor :**
1)SCHLOMKA, Jens-Peter

(57) Abstract :
The present invention relates to a detection method for detecting alarm objects (AO) in pieces of luggage (G), including the following steps: - performing a transmission analysis (TA) on a piece of luggage (G) with creation of a transmission result (TE), - segmenting the transmission result (TE) for the purpose of identifying objects (O), - creating a simulated simulation detector signal (SDS) for at least one identified object (O) with assignment of an alarm material (AM) by means of a diffraction simulation (DS) specific to a diffraction analysis (DA), - performing a diffraction analysis (DA) on the same piece of luggage (G) with creation of a measured detector signal (MDS), - reconstructing a measured diffraction result (MDE) from the created measured detector signal (MDS) for the at least one object (O),- reconstructing a simulation diffraction result (SDE) with the same dimensionality as the measured diffraction result (MDE) on the basis of the created simulation detector signal (SDS) for the at least one object (O), - comparing the measured diffraction result (MDE) with the simulation diffraction result (SDE), - outputting a comparison result (VE).

No. of Pages : 15 No. of Claims : 12

(12) PATENT APPLICATION PUBLICATION
(21) Application No.202517058879 A
(19) INDIA
(22) Date of filing of Application :19/06/2025
(43) Publication Date : 07/11/2025

(54) Title of the invention : ANTIBODIES TO CUB DOMAIN-CONTAINING PROTEIN 1 (CDCP1) AND USES THEREOF

(51) International classification	:C07K 16/28, A61P 35/00, A61K 39/00
(31) Priority Document No	:63/387819
(32) Priority Date	:16/12/2022
(33) Name of priority country	:U.S.A.
(86) International Application No	:PCT/IB2023/062818
Filing Date	:15/12/2023
(87) International Publication No	:WO 2024/127366
(61) Patent of Addition to Application Number	:NA
Filing Date	:NA
(62) Divisional to Application Number	:NA
Filing Date	:NA

(71)**Name of Applicant :**
1)PHEON THERAPEUTICS LTD
Address of Applicant :Rothamsted Research, West Common Harpenden Hertfordshire AL5 2JQ U.K.
(72)**Name of Inventor :**
1)ZAWEL, Leigh
2)HUANG, Chi-Ting

(57) Abstract :
The present disclosure provides antibodies and antigen binding fragments thereof that bind to human CDCP1. The disclosed antibodies are therefore useful for the treatment of cancer, either alone or in combination with other agents.

No. of Pages : 98 No. of Claims : 20

(12) PATENT APPLICATION PUBLICATION
(21) Application No.202517064462 A
(19) INDIA
(22) Date of filing of Application :07/07/2025
(43) Publication Date : 07/11/2025

(54) Title of the invention : LIPID NANOPARTICLES COMPRISING ELEVATED NEUTRAL LIPID AND A TARGETING MOIETY FOR TARGETED DELIVERY OF NUCLEIC ACID

(51) International classification	:A61K 47/69, A61K 9/51, A61K 47/06, A61K 47/28, C12N 15/10	(71)**Name of Applicant :** **1)NANOVATION THERAPEUTICS INC.** Address of Applicant :2665 East Mall, 2nd Floor Vancouver, British Columbia V6T 1Z4 Canada
(31) Priority Document No	:63/431177	(72)**Name of Inventor :**
(32) Priority Date	:08/12/2022	**1)GUPTA, Rupsa**
(33) Name of priority country	:U.S.A.	**2)NARSINENI, Lokesh**
(86) International Application No	:PCT/CA2023/051632	**3)KUREK, Daniel**
Filing Date	:08/12/2023	**4)WITZIGMANN, Dominik**
(87) International Publication No	:WO 2024/119279	**5)KULKARNI, Jayesh**
(61) Patent of Addition to Application Number	:NA	
Filing Date	:NA	
(62) Divisional to Application Number	:NA	
Filing Date	:NA	

(57) Abstract :
Provided herein is a lipid nanoparticle encapsulating nucleic acid and having at least 30 mol% neutral lipid, a sterol or derivative thereof and a targeting moiety anchored in a lipid layer thereof via a lipophilic moiety. Further provided are methods of using the lipid nanoparticles for targeted delivery in vivo. Such lipid nanoparticle may exhibit significantly improved delivery and targeting to extrahepatic tissues and/or organs.

No. of Pages : 55 No. of Claims : 25

(12) PATENT APPLICATION PUBLICATION
(21) Application No.202517094666 A
(19) INDIA
(22) Date of filing of Application :01/10/2025
(43) Publication Date : 07/11/2025

(54) Title of the invention : METHODS, ARCHITECTURES, APPARATUSES AND SYSTEMS FOR BEAM FAILURE RECOVERY

(51) International classification	:H04B 7/06, H04B 7/08
(31) Priority Document No	:63/456982
(32) Priority Date	:04/04/2023
(33) Name of priority country	:U.S.A.
(86) International Application No	:PCT/US2024/022834
Filing Date	:03/04/2024
(87) International Publication No	:WO 2024/211409
(61) Patent of Addition to Application Number	:NA
Filing Date	:NA
(62) Divisional to Application Number	:NA
Filing Date	:NA

(71)**Name of Applicant :**
1)INTERDIGITAL PATENT HOLDINGS, INC.
Address of Applicant :200 Bellevue Parkway, Suite 300 Wilmington, Delaware 19809 U.S.A.
(72)**Name of Inventor :**
1)KWAK, Young Woo
2)NARAYANAN THANGARAJ, Yugeswar Deenoo
3)KHAN BEIGI, Nazli
4)HERATH, Prasanna
5)LEE, Moon IL
6)TOOHER, Patrick

(57) Abstract :
Procedures, methods, architectures, apparatuses, systems, devices, and computer program products for measurement for beam failure recovery. A Wireless Transfer/Receive Unit, WTRU, determines beam failure for at least one beam, wherein beam failure respectively is determined based on a measured value for beams of a first type and on an estimated value for beams of a second type, and, upon determining a number of beam failures, determines, based on a parameter, a determined candidate beam among a plurality of candidate beams, wherein the parameter is based on a measured parameter for a candidate beam of the first type and wherein the parameter is predicted for a candidate beam of the second type.

No. of Pages : 60 No. of Claims : 20

(12) PATENT APPLICATION PUBLICATION
(21) Application No.202517094676 A
(19) INDIA
(22) Date of filing of Application :01/10/2025
(43) Publication Date : 07/11/2025

(54) Title of the invention : OPTICAL LEATHER ON A VEHICLE STEERING WHEEL

(51) International classification	:B60Q 3/283, B60Q 3/78, B62D 1/04, B62D 1/06
(31) Priority Document No	:FR2303310
(32) Priority Date	:04/04/2023
(33) Name of priority country	:France
(86) International Application No	:PCT/EP2024/059115
Filing Date	:04/04/2024
(87) International Publication No	:WO 2024/208935
(61) Patent of Addition to Application Number	:NA
Filing Date	:NA
(62) Divisional to Application Number	:NA
Filing Date	:NA

(71)**Name of Applicant :**
1)AUTOLIV DEVELOPMENT AB
Address of Applicant :Wallentinsvägen 22 44783 Vargarda Sweden
(72)**Name of Inventor :**
1)DOURSOUX, Hugues
2)BERTRAND, Olivier

(57) Abstract :
The invention relates to a vehicle steering wheel (1), comprising: - a frame (1a); - a luminous device (40) arranged to emit light towards a user; - a flexible cover element (21) at least partially covering the luminous device (40), the flexible cover element (21) being at least partially permeable to light; and - a support (41) arranged between the frame (1a) and the flexible cover element (21), characterised in that the flexible cover element (21) comprises at least one protrusion (22) arranged at least partially in at least one recess (42) of the support (41).

No. of Pages : 13 No. of Claims : 10

(12) PATENT APPLICATION PUBLICATION
(21) Application No.202517094677 A
(19) INDIA
(22) Date of filing of Application :01/10/2025
(43) Publication Date : 07/11/2025

(54) Title of the invention : HANDOVER OPERATIONS IN NON-TERRESTRIAL NETWORKS

(51) International classification	:H04B 7/185, H04W 36/00, H04W 56/00
(31) Priority Document No	:63/455356
(32) Priority Date	:29/03/2023
(33) Name of priority country	:U.S.A.
(86) International Application No	:PCT/US2024/022343
Filing Date	:29/03/2024
(87) International Publication No	:WO 2024/206902
(61) Patent of Addition to Application Number	:NA
Filing Date	:NA
(62) Divisional to Application Number	:NA
Filing Date	:NA

(71)**Name of Applicant :**
1)OFINNO, LLC
Address of Applicant :1950 Opportunity Way Suite 1200 Reston, Virginia 20190 U.S.A.
(72)**Name of Inventor :**
1)KHOSHKHOLGH DASHTAKI, Mohammad Ghadir
2)CIRIK, Ali Cagatay
3)DINAN, Esmael Hejazi
4)JEON, Hyoungsuk
5)PRASAD, Gautham

(57) Abstract :
A method may include receiving, by a wireless device, a radio resource control (RRC) message indicating a first cell-specific scheduling offset. The method may also include receiving, via a first cell of a non-terrestrial network (NTN), a medium access control (MAC) control element (CE) indicating a differential offset. The method may further include transmitting, via the first cell, a first uplink signal using the differential offset and the first cell-specific scheduling offset. The method may additionally include receiving an RRC reconfiguration message comprising reconfiguration with synchronization configuration parameters. The RRC reconfiguration message may include a second cell-specific scheduling offset. Based on the RRC reconfiguration message, the method may include discarding or deleting the differential offset. The method may also include transmitting, via a second cell, a second uplink signal using the second cell-specific scheduling offset.

No. of Pages : 109 No. of Claims : 10

(12) PATENT APPLICATION PUBLICATION
(21) Application No.202517094690 A
(19) INDIA
(22) Date of filing of Application :01/10/2025
(43) Publication Date : 07/11/2025

(54) Title of the invention : DETECTION OF VIRAL PRESENCE IN CELLS

(51) International classification	:C12Q 1/70, C12Q 1/6883
(31) Priority Document No	:23159541.4
(32) Priority Date	:02/03/2023
(33) Name of priority country	:EPO
(86) International Application No	:PCT/EP2024/054932
Filing Date	:27/02/2024
(87) International Publication No	:WO 2024/180050
(61) Patent of Addition to Application Number	:NA
Filing Date	:NA
(62) Divisional to Application Number	:NA
Filing Date	:NA

(71)**Name of Applicant :**
1)EVONIK OPERATIONS GMBH
Address of Applicant :Rellinghauser Strasse 1-11 45128 Essen Germany
(72)**Name of Inventor :**
1)ROY, Suki
2)NAGARAJAN, Sanjanaa
3)BÖHL, Florian
4)HUANG, Lingzhi
5)WONG, Kit Yeng
6)WHELAN, Rose

(57) Abstract :
The present invention is related to a method of identifying integrated viral DNA in the genome of at least one mammalian test cell, the method comprising the steps of: (a) determining presence or absence of viral DNA in a DNA sample obtained from the mammalian test cell; and (b) determining the methylation status of at least one CpG site in the viral DNA of the DNA sample obtained from the mammalian test cell, wherein the presence of the viral DNA after step (a) and hypermethylation in step (b) is indicative of the viral DNA being integrated in the mammalian test cell and the virus being inactive respectively; the presence of the viral DNA after step (a) and baseline methylation or hypomethylation in step (b) is indicative of the viral DNA being integrated in the mammalian test cell and the virus being active respectively; and the absence of the viral DNA after step (a) is indicative of the viral DNA not being integrated in the mammalian test cell respectively; and wherein the method is carried out on an array.

No. of Pages : 24 No. of Claims : 15

(12) PATENT APPLICATION PUBLICATION
(21) Application No.202517094744 A
(19) INDIA
(22) Date of filing of Application :01/10/2025
(43) Publication Date : 07/11/2025

(54) Title of the invention : DETERMINING FREQUENCY PERIODICITIES FOR DECISION MAKING FOR OPERATION OF A SERVICE IN A COMMUNICATION NETWORK

(51) International classification	:H04W 24/02, G06N 3/00, H04L 41/00, H04W 24/04
(31) Priority Document No	:20230100185
(32) Priority Date	:03/03/2023
(33) Name of priority country	:Greece
(86) International Application No	:PCT/IB2023/059306
Filing Date	:20/09/2023
(87) International Publication No	:WO 2024/184689
(61) Patent of Addition to Application Number	:NA
Filing Date	:NA
(62) Divisional to Application Number	:NA
Filing Date	:NA

(71)**Name of Applicant :**
1)TELEFONAKTIEBOLAGET LM ERICSSON (PUBL)
Address of Applicant :SE-164 83 Stockholm Sweden
(72)**Name of Inventor :**
1)SHOKRI GHADIKOLAEI, Hossein
2)GANJALIZADEH, Milad
3)HARALDSON, Johan
4)KARAPANTELAKIS, Athanasios

(57) Abstract :
A computer-implemented method performed by a computing device determine a plurality of frequency periodicities for decision making for an operation of at least one service in a communication network is provided. The method includes determining (500) a first frequency periodicity for a first decision variable for the operation of the at least one service. The method further includes determining (502) a second frequency periodicity for a second decision variable for the operation of the at least one service. The first frequency periodicity is different than the second frequency periodicity. The method further includes outputting (504) the first frequency periodicity for the first decision variable and the second frequency periodicity for the second decision variable. Related methods and apparatus are also provided.

No. of Pages : 28 No. of Claims : 21

(12) PATENT APPLICATION PUBLICATION
(21) Application No.202517094747 A
(19) INDIA
(22) Date of filing of Application :01/10/2025
(43) Publication Date : 07/11/2025

(54) Title of the invention : IMAGE DECODING METHOD AND APPARATUS, IMAGE CODING METHOD AND APPARATUS, AND DEVICE AND STORAGE MEDIUM

(51) International classification :H04N 19/124
(31) Priority Document No :202310366064.2
(32) Priority Date :31/03/2023
(33) Name of priority country :China
(86) International Application No :PCT/CN2024/084961
Filing Date :29/03/2024
(87) International Publication No :WO 2024/199477
(61) Patent of Addition to Application Number :NA
Filing Date :NA
(62) Divisional to Application Number :NA
Filing Date :NA

(71)**Name of Applicant :**
1)HANGZHOU HIKVISION DIGITAL TECHNOLOGY CO., LTD.
Address of Applicant :No.555 Qianmo Road, Binjiang District Hangzhou, Zhejiang 310051 China
(72)**Name of Inventor :**
1)YE, Zongmiao
2)CHEN, Fangdong
3)WANG, Li
4)WU, Xiaoyang

(57) Abstract :
The present invention belongs to the technical field of image processing. Disclosed are an image decoding method and apparatus, an image coding method and apparatus, and a device and a storage medium. The image decoding method of the present application comprises: extracting image residual data or extended residual data from an image code stream, and obtaining a plurality of extended residual groups on the basis of the extracted image residual data or extended residual data; respectively performing residual recovery on the plurality of extended residual groups, so as to obtain an image reconstruction feature corresponding to each extended residual group; performing spatial-domain resolution amplification processing on the image reconstruction feature corresponding to each extended residual group, so as to obtain reconstruction feature data; and performing image reconstruction according to the reconstruction feature data, so as to obtain a reconstructed image block. Since acquired extended residual data is residual data which has been subjected to spatial-domain resolution reduction processing, residual recovery processing performed in groups on the entire group can be implemented at a low resolution, thereby improving the overall residual recovery calculation efficiency, and reducing the time complexity.

No. of Pages : 47 No. of Claims : 10

(12) PATENT APPLICATION PUBLICATION
(21) Application No.202517094750 A
(19) INDIA
(22) Date of filing of Application :01/10/2025
(43) Publication Date : 07/11/2025

(54) Title of the invention : BALLOON CATHETER

(51) International classification :A61M 25/10
(31) Priority Document No :2023-082515
(32) Priority Date :18/05/2023
(33) Name of priority country :Japan
(86) International Application No :PCT/JP2024/013694
Filing Date :03/04/2024
(87) International Publication No :WO 2024/236925
(61) Patent of Addition to Application Number :NA
Filing Date :NA
(62) Divisional to Application Number :NA
Filing Date :NA

(71)**Name of Applicant :**
1)GOODMAN CO., LTD.
Address of Applicant :5th Floor, KDX Nagoya Sakae Building, 4-5-3 Sakae, Naka-ku, Nagoya-shi, Aichi 4600008 Japan
(72)**Name of Inventor :**
1)OKAMOTO, Mitsumasa

(57) Abstract :
This balloon catheter comprises: a balloon 13 that can expand and contract; and a linear protrusion 20 that protrudes from the surface of the balloon 13 and extends in the axial direction of the balloon 13 along the surface thereof. A plurality of the protrusions 20 are arranged at intervals in the circumferential direction of the balloon 13. The balloon 13 is formed in a contracted state and has vanes 22 extending to the outside in the radial direction of the balloon 13. The vanes 22 extend in the axial direction of the balloon 13, and each vane is arranged so that the entirety thereof is positioned between adjacent protrusions 20 in the circumferential direction of the balloon 13 when viewed in a cross-section orthogonal to the axial direction.

No. of Pages : 30 No. of Claims : 6

(12) PATENT APPLICATION PUBLICATION
(21) Application No.202517094468 A
(19) INDIA
(22) Date of filing of Application :01/10/2025
(43) Publication Date : 07/11/2025

(54) Title of the invention : GRAIN-ORIENTED ELECTROMAGNETIC STEEL SHEET AND METHOD FOR FORMING INSULATING COATING

(51) International classification	:C23C 22/00, C21D 8/12, C21D 9/46, C22C 38/00, C22C 38/06
(31) Priority Document No	:2023-065385
(32) Priority Date	:13/04/2023
(33) Name of priority country	:Japan
(86) International Application No	:PCT/JP2024/014842
Filing Date	:12/04/2024
(87) International Publication No	:WO 2024/214819
(61) Patent of Addition to Application Number	:NA
Filing Date	:NA
(62) Divisional to Application Number	:NA
Filing Date	:NA

(71)**Name of Applicant :**
1)NIPPON STEEL CORPORATION
Address of Applicant :6-1, Marunouchi 2-chome, Chiyoda-ku, Tokyo 1008071 Japan
(72)**Name of Inventor :**
1)TAKEDA Kazutoshi
2)TAKATANI Shinsuke
3)KATAOKA Takashi
4)KOGAKURA Yuuki

(57) Abstract :
This grain-oriented electromagnetic steel sheet comprises a base material steel sheet and an insulating coating formed on the surface of the base material steel sheet. The base material steel sheet comprises a flat section and a groove section that extends in a direction at a 45–135° angle to a rolling direction; the depth of the groove section is 10–30 μm; and the width of the groove section is 10–200 μm. The insulating coating comprises: an intermediate layer that is formed on the base material steel sheet side, that includes a crystalline metal phosphate and that has a thickness of 0.1–15.0 μm; and a tensile coating layer that is formed on the surface side of the insulating coating. For at least 50% of the groove section, by area ratio, the base material steel sheet is covered by the insulating coating which includes the tensile coating layer and the intermediate layer that has a thickness of 0.1–9.0 μm.

No. of Pages : 47 No. of Claims : 4

(12) PATENT APPLICATION PUBLICATION
(21) Application No.202517094486 A
(19) INDIA
(22) Date of filing of Application :01/10/2025
(43) Publication Date : 07/11/2025

(54) Title of the invention : SYSTEMS AND METHODS UTILIZING ARTIFICIAL INTELLIGENCE FOR AUTOMATED VISUAL INSPECTION OF ROPES

(51) International classification :G06T 7/00
(31) Priority Document No :63/495562
(32) Priority Date :12/04/2023
(33) Name of priority country :U.S.A.
(86) International Application No :PCT/IB2024/053250
Filing Date :03/04/2024
(87) International Publication No :WO 2024/213969
(61) Patent of Addition to Application Number :NA
Filing Date :NA
(62) Divisional to Application Number :NA
Filing Date :NA

(71)**Name of Applicant :**
1)SAMSON ROPE TECHNOLOGIES, INC.
Address of Applicant :2090 Thornton Street Ferndale, Washington 98248 U.S.A.
(72)**Name of Inventor :**
1)PLAIA, James R.
2)HISLOP, Chad
3)HAVERSTRAW, Dean
4)TODD, Garth

(57) Abstract :
A computer-implemented method using a mobile device to inspect a rope. Visual data is captured, wherein the visual data includes one or more sections of the rope along a length thereof. The images are analyzed using a knowledge base implemented within logic of a control system of the mobile device. From the knowledge base, an expected life for the rope is calculated, and a report is generated on the mobile device to display the expected life of the rope as calculated from the knowledge base. The method further includes the step of processing the visual data to ready the visual data for analysis. This involves breaking down the visual data into tiles, wherein the visual data is broken into multiple image segments along the length of the rope.

No. of Pages : 24 No. of Claims : 22

(12) PATENT APPLICATION PUBLICATION
(19) INDIA
(22) Date of filing of Application :01/10/2025
(21) Application No.202517094497 A
(43) Publication Date : 07/11/2025

(54) Title of the invention : SOLAR-POWERED MOTORIZED WINDOW TREATMENT

(51) International classification	:E06B 9/42, E06B 9/68, E06B 9/70
(31) Priority Document No	:63/488375
(32) Priority Date	:03/03/2023
(33) Name of priority country	:U.S.A.
(86) International Application No	:PCT/US2024/018262
Filing Date	:02/03/2024
(87) International Publication No	:WO 2024/186700
(61) Patent of Addition to Application Number	:NA
Filing Date	:NA
(62) Divisional to Application Number	:NA
Filing Date	:NA

(71)**Name of Applicant :**
1)LUTRON TECHNOLOGY COMPANY LLC
Address of Applicant :7200 Suter Road Coopersburg, Pennsylvania 18036-1299 U.S.A.
(72)**Name of Inventor :**
1)BLAIR, Edward J.
2)BULL, John H.
3)DEJONGE, Stuart W.
4)FALLIS, JR., Jeremy M.
5)FIEBIG, Charles
6)KIRBY, David A.
7)KNODE, Galen Edgar
8)PROTZMAN, Brent

(57) Abstract :
A motorized window treatment may be powered (e.g., entirely powered) from solar energy. The motorized window treatment may comprise a roller tube, a covering material extending from the roller tube to a bottom bar, and a motor drive unit configured to rotate the roller tube for adjusting a position of the covering material. The bottom bar may comprise at least one solar cell and an energy storage element electrically coupled to the solar cell. The motorized window treatment may comprise a dock, which may have a base portion electrically coupled the energy storage element of the motor drive unit. The bottom bar may be positioned adjacent to the base portion when the covering material is in a raised position, such that the energy storage element of the bottom bar may discharge through the base portion into an energy storage element of the motor drive unit.

No. of Pages : 181 No. of Claims : 133

(12) PATENT APPLICATION PUBLICATION
(21) Application No.202517094514 A
(19) INDIA
(22) Date of filing of Application :01/10/2025
(43) Publication Date : 07/11/2025

(54) Title of the invention : TERMINAL POSITIONING METHOD, FIRST TERMINAL, AND APPARATUS

(51) International classification	:H04W 4/02, H04L 5/00, H04W 64/00
(31) Priority Document No	:202310367892.8
(32) Priority Date	:07/04/2023
(33) Name of priority country	:China
(86) International Application No	:PCT/CN2024/086462
Filing Date	:07/04/2024
(87) International Publication No	:WO 2024/208365
(61) Patent of Addition to Application Number	:NA
Filing Date	:NA
(62) Divisional to Application Number	:NA
Filing Date	:NA

(71)**Name of Applicant :**
1)DATANG MOBILE COMMUNICATIONS EQUIPMENT CO., LTD.
Address of Applicant :1/F, Building 1, No. 5 Shangdi East Road Haidian District, Beijing 100085 China
(72)**Name of Inventor :**
1)LI, Hui
2)REN, Xiaotao
3)REN, Bin
4)DA, Ren

(57) Abstract :
Provided in the present disclosure are a terminal positioning method, a first terminal, and an apparatus, wherein the method is applied to a first terminal. The method comprises: sending control signaling to a second terminal, wherein the control signaling is used for indicating transmission information of a positioning reference signal which is used in sidelink positioning, and the transmission information is used for positioning a first terminal or the second terminal.

No. of Pages : 39 No. of Claims : 10

(12) PATENT APPLICATION PUBLICATION
(21) Application No.202517094526 A
(19) INDIA
(22) Date of filing of Application :01/10/2025
(43) Publication Date : 07/11/2025

(54) Title of the invention : METHOD AND DEVICE FOR ENERGY SAVING IN WIRELESS COMMUNICATION SYSTEM

(51) International classification	:H04W 52/02, H04W 24/10, H04W 24/08, H04W 72/23, H04B 7/06
(31) Priority Document No	:10-2023-0046031
(32) Priority Date	:07/04/2023
(33) Name of priority country	:Republic of Korea
(86) International Application No	:PCT/KR2024/004498
Filing Date	:05/04/2024
(87) International Publication No	:WO 2024/210606
(61) Patent of Addition to Application Number	:NA
Filing Date	:NA
(62) Divisional to Application Number	:NA
Filing Date	:NA

(71)**Name of Applicant :**
1)SAMSUNG ELECTRONICS CO., LTD.
Address of Applicant :129, Samsung-ro, Yeongtong-gu, Suwon-si, Gyeonggi-do 16677 Republic of Korea
(72)**Name of Inventor :**
1)YI, Junyung
2)KIM, Youngbum
3)PARK, Kyoungmin
4)LEE, Jaewon

(57) Abstract :
The disclosure relates to a 5th generation (5G) or 6th generation (6G) communication system for supporting a higher data transmission rate. A method performed by a terminal is provided. The method includes receiving, by the terminal from a base station, channel state information (CSI) report configuration information including a configuration on a CSI report for a network energy saving, a power offset for the CSI report for the network energy saving being included in the configuration on the CSI report for the network energy saving, obtaining, by the terminal, a channel quality indicator (CQI) based on the power offset, and transmitting, by the terminal to the base station, a CSI report including the CQI.

No. of Pages : 54 No. of Claims : 15

(12) PATENT APPLICATION PUBLICATION
(21) Application No.202517094537 A
(19) INDIA
(22) Date of filing of Application :01/10/2025
(43) Publication Date : 07/11/2025

(54) Title of the invention : SWEETNESS COMPOSITION AND PREPARATION METHOD THEREOF

(51) International classification	:A23L 27/10, A23L 5/20
(31) Priority Document No	:202310777641.7
(32) Priority Date	:28/06/2023
(33) Name of priority country	:China
(86) International Application No	:PCT/CN2023/108876
Filing Date	:24/07/2023
(87) International Publication No	:WO 2025/000615
(61) Patent of Addition to Application Number	:NA
Filing Date	:NA
(62) Divisional to Application Number	:NA
Filing Date	:NA

(71)**Name of Applicant :**
1)GUILIN GFS MONK FRUIT CORPORATION
Address of Applicant :No.5, Liangfeng Road, Yanshan Town, Yanshan District Guilin, Guangxi 541006 China
(72)**Name of Inventor :**
1)LI, Jian
2)ZHU, Xuehua
3)HUANG, Lingyu
4)TAN, Tailiang
5)XU, Bo
6)LAN, Feisi
7)LI, Xingyu
8)LIANG, Zhenhua

(57) Abstract :
A sweetness composition, based on the total weight of the sweetness composition, comprising: 70% to 85% of mogroside V; 5% to 12% of 11-O-mogroside V; 0 to 0.5% of simonoside I; 0 to 0.05% of mogroside II and mogroside III; 0 to 0.5% of protein; and 0 to 0.5% of total sugar. Also disclosed is a method for preparing the sweetness composition, comprising the following steps: extracting Siraitia grosvenorii to obtain an extract; clarifying the extract to obtain a clarified liquid; sequentially treating the clarified liquid with a strong acid cation exchange resin column and a weak alkaline anion exchange resin column to obtain an ion exchange treated liquid; and the ion exchange treated liquid entering an adsorption resin column combination for multi-stage adsorption separation and elution, collecting the eluate, and drying to obtain the sweetness composition, wherein, the ion exchange treatment step needs to be performed before the multi-stage adsorption separation step.

No. of Pages : 60 No. of Claims : 14

(12) PATENT APPLICATION PUBLICATION
(21) Application No.202517094538 A
(19) INDIA
(22) Date of filing of Application :01/10/2025
(43) Publication Date : 07/11/2025

(54) Title of the invention : POWER STORAGE DEVICE EXTERIOR MATERIAL, MANUFACTURING METHOD FOR SAME, AND POWER STORAGE DEVICE

(51) International classification	:H01M 50/105, H01G 11/78, H01G 11/84, H01M 10/0562, H01M 50/121
(31) Priority Document No	:2023-046079
(32) Priority Date	:22/03/2023
(33) Name of priority country	:Japan
(86) International Application No	:PCT/JP2024/011519
Filing Date	:22/03/2024
(87) International Publication No	:WO 2024/195877
(61) Patent of Addition to Application Number	:NA
Filing Date	:NA
(62) Divisional to Application Number	:NA
Filing Date	:NA

(71)**Name of Applicant :**
1)DAI NIPPON PRINTING CO., LTD.
Address of Applicant :1-1, Ichigaya Kagacho 1-chome, Shinjuku-ku, Tokyo 1628001 Japan
(72)**Name of Inventor :**
1)OKANO, Ai
2)SASAKI, Miho

(57) Abstract :
This power storage device exterior material is constituted from a laminate comprising at least a base material layer, a barrier layer, and a thermally fusible resin layer in this order from the outside. In the following tensile test in a 120°C environment, the strength of the power storage device exterior material when stretched by 20% in the MD direction is 35 N/15 mm or more. [Tensile Test] Measurement is performed using a tensile testing machine by a method compliant with the specification of JIS K 7127:1999. The measurement conditions used are: a rectangular shape having a sample width of 15 mm; an inter-mark distance of 30 mm; a tensile speed of 0.5 mm/min; a test environment of 120°C; and an average value obtained by performing measurement three times.

No. of Pages : 99 No. of Claims : 16

(12) PATENT APPLICATION PUBLICATION
(21) Application No.202517094539 A
(19) INDIA
(22) Date of filing of Application :01/10/2025
(43) Publication Date : 07/11/2025

(54) Title of the invention : WHITE CHOCOLATE CONFECTION PRODUCTION METHOD

(51) International classification :A23G 1/30
(31) Priority Document No :2023-046028
(32) Priority Date :03/03/2023
(33) Name of priority country :Japan
(86) International Application No :PCT/JP2024/007917
Filing Date :02/03/2024
(87) International Publication No :WO 2024/185723
(61) Patent of Addition to Application Number :NA
Filing Date :NA
(62) Divisional to Application Number :NA
Filing Date :NA

(71)**Name of Applicant :**
1)EARTH DESIGN LIMITED COMPANY
Address of Applicant :643-4,KOU,ISHIDAHIGASHI,SANGAWA-TYOU,SANUKI-SI Kagawa 7692321 Japan
(72)**Name of Inventor :**
1)IGAWA MUNETAKA

(57) Abstract :
Provided is a white chocolate confection production method in which only white chocolate is used, and after baking, the chocolate is rapidly cooled to produce a chocolate confection that melts in the mouth smoothly, exhibits a distinctive mouth feel and flavor, and has a rough, small rock-like appearance. In this method, pieces of white chocolate cut into squares measuring 1.8 to 2.2 cm long, 1.8 to 2.2 cm wide, and 1.0 to 1.5 cm high, are placed evenly on an baking sheet such that the height is 1.0 to 1.5 cm; the white chocolate is heated in an oven that has been set to the temperature of 170 to 190°C, for 16 to 18 minutes; once the heating is complete, the cocoa component contained in the white chocolate develops color due to the heating and a dark brown layer is formed on the surface of the white chocolate; in a state where the oil component included in the white chocolate has oozed out, the white chocolate is stirred with a heat-resistant spatula for a uniform texture; the heating of the white chocolate in the oven where the temperature has been set as before for 5 to 7 minutes and the stirring of the white chocolate with the heat-resistant spatula are repeated two or three times; subsequently, the white chocolate is transferred onto a heat-resistant sheet; the white chocolate that has been transferred onto the heat-resistant sheet is placed in a refrigerator that has been set to a temperature of minus 18 to 20°C for 30 to 40 minutes to rapidly cool the white chocolate until the temperature at the center of the white chocolate reaches 16 to 18°C; the rapidly cooled white chocolate is taken out of the refrigerator, and is shaped by being divided into bite size pieces.

No. of Pages : 11 No. of Claims : 2

(12) PATENT APPLICATION PUBLICATION
(21) Application No.202517094590 A
(19) INDIA
(22) Date of filing of Application :01/10/2025
(43) Publication Date : 07/11/2025

(54) Title of the invention : SOLAR PANEL VACUUM LIFTER AND TRAILER CONNECTABLE TO A HOST PIECE OF EQUIPMENT

(51) International classification	:B66C 1/02, B66F 9/065, B66F 9/16, B66F 9/18, F24S 30/00
(31) Priority Document No	:63/490811
(32) Priority Date	:17/03/2023
(33) Name of priority country	:U.S.A.
(86) International Application No	:PCT/US2024/020089
Filing Date	:15/03/2024
(87) International Publication No	:WO 2024/196736
(61) Patent of Addition to Application Number	:NA
Filing Date	:NA
(62) Divisional to Application Number	:NA
Filing Date	:NA

(71)**Name of Applicant :**
1)VACUWORX GLOBAL LLC
Address of Applicant :10105 East 55th Place Tulsa, OK 74146 U.S.A.
(72)**Name of Inventor :**
1)SPARKS, Keith, A.
2)BOWMAN, Trevor
3)HENDRICKS, Justin

(57) Abstract :
Embodiments of a solar panel trailer (10) of this disclosure include a fixed frame (20) having a pair of tilt hinges (55) at a forward end (21); a tilting frame (70) having forks (83) and connected to the pair of tilt hinges; a pair of lifting cylinders (140) having a piston end (141) and a rod end (143), the piston end connected to the fixed frame, the rod end connected to a corresponding one of the pair of tilt hinges, and a pair of vertically oriented clamps (120) located at a rearward end (31) of the trailer, an open end (121) of each clamp facing away from the rearward end; the tilting frame tilting the pair of lifting cylinders extend and retract. The trailer may be accompanied by a vacuum lifter (150) including a slewing bearing (151); at least two spring-loaded, disc-shaped vacuum pads (153); and vacuum pump (155).

No. of Pages : 11 No. of Claims : 10

(12) PATENT APPLICATION PUBLICATION
(21) Application No.202517094607 A
(19) INDIA
(22) Date of filing of Application :01/10/2025
(43) Publication Date : 07/11/2025

(54) Title of the invention : ELECTRONIC DEVICE, METHOD, AND NON-TRANSITORY COMPUTER-READABLE STORAGE MEDIUM FOR SYNCHRONIZATION TO BROADCAST ISOCHRONOUS STREAM

(51) International classification	:H04W 56/00, H04W 4/80, H04W 76/14, H04W 4/06, H04W 8/00
(31) Priority Document No	:10-2023-0056666
(32) Priority Date	:28/04/2023
(33) Name of priority country	:Republic of Korea
(86) International Application No	:PCT/KR2024/000573
Filing Date	:11/01/2024
(87) International Publication No	:WO 2024/225573
(61) Patent of Addition to Application Number	:NA
Filing Date	:NA
(62) Divisional to Application Number	:NA
Filing Date	:NA

(71)**Name of Applicant :**
1)SAMSUNG ELECTRONICS CO., LTD.
Address of Applicant :129, Samsung-ro Yeongtong-gu, Suwon-si Gyeonggi-do 16677 Republic of Korea
(72)**Name of Inventor :**
1)KIM, Sanghyeok
2)JIN, Juyeon
3)KIM, Taekyung
4)AHN, Byeonghoon
5)JANG, Wonkyoung
6)JANG, Junho
7)CHEONG, Gupil

(57) Abstract :
A first electronic device is provided. The first electronic device may comprise a communication circuit. The first electronic device may comprise a processor. The processor may be configured to identify a failure of synchronization to a broadcast isochronous stream (BIS) from a third electronic device during first periodic advertisement intervals of the third electronic device, which are indicated on the basis of first information for synchronization to the BIS. The processor may be configured to, on the basis of the identification, request, via the communication circuit, second information for synchronization to the BIS. The processor may be configured to synchronize to the BIS during second periodic advertisement intervals of the third electronic device, which are indicated on the basis of the second information received via the communication circuit from a second electronic device which has been paired with the first electronic device and synchronized to the BIS.

No. of Pages : 36 No. of Claims : 15

(12) PATENT APPLICATION PUBLICATION
(19) INDIA
(22) Date of filing of Application :01/10/2025
(21) Application No.202517094617 A
(43) Publication Date : 07/11/2025

(54) Title of the invention : ENZYMES WITH RUVC DOMAINS

(51) International classification :C12N 15/113, C12N 9/22, C07K 14/47
(31) Priority Document No :63/487847
(32) Priority Date :01/03/2023
(33) Name of priority country :U.S.A.
(86) International Application No :PCT/US2024/017879
Filing Date :29/02/2024
(87) International Publication No :WO 2024/182614
(61) Patent of Addition to Application Number :NA
Filing Date :NA
(62) Divisional to Application Number :NA
Filing Date :NA

(71)**Name of Applicant :**
1)METAGENOMI, INC.
Address of Applicant :1545 Park Ave Emeryville, California 94608 U.S.A.
(72)**Name of Inventor :**
1)THOMAS, Brian C.
2)ALEXANDER, Lisa
3)BROWN, Christopher
4)BUTTERFIELD, Cristina Noel
5)COST, Gregory J.
6)DEVOTO, Audra
7)ESPINOSA, Diego
8)GOLTSMAN, Daniela S.A.
9)LAMOTHE, Rebecca
10)LAPERRIERE, Sarah
11)LIU, Jason
12)STORLIE, Meghan

(57) Abstract :
The present disclosure provides for endonuclease enzymes having distinguishing domain features, as well as methods of using such enzymes or variants thereof.

No. of Pages : 129 No. of Claims : 26

(12) PATENT APPLICATION PUBLICATION
(21) Application No.202517094620 A
(19) INDIA
(22) Date of filing of Application :01/10/2025
(43) Publication Date : 07/11/2025

(54) Title of the invention : METHODS AND PROCEDURES TO ENABLE PAGING FOR LOW LATENCY SUPPORT IN WLAN

(51) International classification	:H04W 68/00, H04W 84/02
(31) Priority Document No	:63/449479
(32) Priority Date	:02/03/2023
(33) Name of priority country	:U.S.A.
(86) International Application No	:PCT/US2024/017971
Filing Date	:01/03/2024
(87) International Publication No	:WO 2024/182659
(61) Patent of Addition to Application Number	:NA
Filing Date	:NA
(62) Divisional to Application Number	:NA
Filing Date	:NA

(71)**Name of Applicant :**
1)INTERDIGITAL PATENT HOLDINGS, INC.
Address of Applicant :200 Bellevue Parkway Suite 300 Wilmington, Delaware 19809 U.S.A.
(72)**Name of Inventor :**
1)SAAD, Mahmoud
2)LIN, Zinan
3)YANG, Rui
4)LOU, Hanqing
5)WANG, Xiaofei
6)LEVY, Joseph

(57) Abstract :
A station (STA) may support a low latency data transmission. The STA is configured to receive a preamble that comprises a low latency data transmission resource present subfield. The STA is configured to determine, based on the low latency data transmission resource present subfield, that resources are allocated for a low latency data transmission. The STA is configured to monitor the allocated resources for the low latency data transmission. The STA is configured to receive control information in a physical layer protocol data unit (PPDU) in the allocated resources for the low latency data transmission. The STA is configured to decode the received control information. The STA is configured to determine that the control information is addressed to the STA. The STA is configured to receive the low latency data transmission over the allocated resources for the low latency data transmission based on the control information.

No. of Pages : 24 No. of Claims : 20

(12) PATENT APPLICATION PUBLICATION
(21) Application No.202517094643 A
(19) INDIA
(22) Date of filing of Application :01/10/2025
(43) Publication Date : 07/11/2025

(54) Title of the invention : METHOD AND APPARATUS FOR ADJUSTING AI/ML MODEL

(51) International classification :H04W 16/22
(31) Priority Document No :202310388666.8
(32) Priority Date :03/04/2023
(33) Name of priority country :China
(86) International Application No :PCT/CN2024/084694
Filing Date :29/03/2024
(87) International Publication No :WO 2024/208094
(61) Patent of Addition to Application Number :NA
Filing Date :NA
(62) Divisional to Application Number :NA
Filing Date :NA

(71)**Name of Applicant :**
1)HUAWEI TECHNOLOGIES CO., LTD.
Address of Applicant :Huawei Administration Building, Bantian, Longgang District Shenzhen, Guangdong 518129 China
(72)**Name of Inventor :**
1)WANG, Sihai
2)QIN, Cheng
3)YANG, Rui

(57) Abstract :
The present application relates to a method and apparatus for adjusting an AI/ML model. The method comprises: a first device sending first information to a second device, wherein the first information comprises information for requesting the adjustment of a first AI/ML model, and/or capability information of a third device; the second device adjusting the first AI/ML model according to the first information, and sending second information, wherein the second information is information of the adjusted first AI/ML model; and the third device receiving the second information, and operating the adjusted first AI/ML model according to the second information. In the embodiments of the present application, when a second device adjusts a first AI/ML model, the actual condition of a device that deploys the first AI/ML model can be taken into consideration, such that an adjustment result can be fitted to software and hardware environments of a third device, and thus the degree of fitting between the AI/ML model and the device that deploys the AI/ML model is raised, and the execution performance of the AI/ML model can be improved.

No. of Pages : 51 No. of Claims : 46

(12) PATENT APPLICATION PUBLICATION
(21) Application No.202517094644 A
(19) INDIA
(22) Date of filing of Application :01/10/2025
(43) Publication Date : 07/11/2025

(54) Title of the invention : PPDU-BASED COMMUNICATION METHOD AND APPARATUS

(51) International classification	:H04L 69/323
(31) Priority Document No	:202310320503.6
(32) Priority Date	:23/03/2023
(33) Name of priority country	:China
(86) International Application No	:PCT/CN2024/081581
Filing Date	:14/03/2024
(87) International Publication No	:WO 2024/193425
(61) Patent of Addition to Application Number	:NA
Filing Date	:NA
(62) Divisional to Application Number	:NA
Filing Date	:NA

(71)**Name of Applicant :**
1)HUAWEI TECHNOLOGIES CO., LTD.
Address of Applicant :Huawei Administration Building, Bantian, Longgang District Shenzhen, Guangdong 518129 China
(72)**Name of Inventor :**
1)GONG, Bo
2)GAN, Ming
3)LIU, Chenchen
4)HUA, Meng
5)LI, Feng

(57) Abstract :
A PPDU-based communication method and apparatus, which are applied to a wireless local area network system that supports 802.11 series protocols such as next-generation WiFi protocols of IEEE 802.11ax, e.g. 802.11be, Wi-Fi 7or EHT, and the next generation of 802.11be, e.g. Wi-Fi 8, and can also be applied to a UWB-based wireless personal local area network system, a sensing system, etc. The method comprises: a first communication apparatus generating a PPDU, and sending the PPDU; and correspondingly, a second communication apparatus receiving the PPDU, and processing the PPDU on the basis of an index value of a pilot sub-carrier, wherein the PPDU comprises a pilot sub-carrier and a data sub-carrier, and a signal modulus of the pilot sub-carrier is greater than a signal modulus of the data sub-carrier. By means of the method, the accuracy of demodulation performed by a second communication apparatus is effectively improved.

No. of Pages : 33 No. of Claims : 19

(12) PATENT APPLICATION PUBLICATION
(21) Application No.202517094645 A
(19) INDIA
(22) Date of filing of Application :01/10/2025
(43) Publication Date : 07/11/2025

(54) Title of the invention : METHOD OF CONTROLLING A WIND TURBINE

(51) International classification :F03D 7/02
(31) Priority Document No :23166685.0
(32) Priority Date :05/04/2023
(33) Name of priority country :EPO
(86) International Application No :PCT/EP2023/083268
Filing Date :28/11/2023
(87) International Publication No :WO 2024/208442
(61) Patent of Addition to Application Number :NA
Filing Date :NA
(62) Divisional to Application Number :NA
Filing Date :NA

(71)**Name of Applicant :**
1)SIEMENS GAMESA RENEWABLE ENERGY A/S
Address of Applicant :Borupvej 16 7330 Brande Denmark
(72)**Name of Inventor :**
1)ENEVOLDSEN, Peder Bay
2)GONZALEZ, Alejandro Gomez
3)POULSEN, Steffen Frydendal

(57) Abstract :
The invention describes a method of controlling a wind turbine (1) with a rotor comprising a plurality of rotor blades (10), each equipped with an active flap arrangement (2) at its trailing edge (10TE), which method comprises the steps of determining a set (S10) of rotor blade flutter conditions, wherein each rotor blade flutter condition comprises a combination of rotor blade parameters (?, ?) at which rotor blade flutter would develop; and, during operation of the wind turbine (1), monitoring the rotor blade parameters (?, ?) and, when the parameters (?, ?) of a rotor blade (10) approach a rotor blade flutter condition, controlling the active flap arrangement (2) of that rotor blade (10) to increase aerodynamic damping of the rotor blade (10). The invention further describes a wind turbine (1) comprising a means (12, 14) of controlling the active flap arrangements (2) using the inventive method.

No. of Pages : 16 No. of Claims : 15

(12) PATENT APPLICATION PUBLICATION
(21) Application No.202517094657 A
(19) INDIA
(22) Date of filing of Application :01/10/2025
(43) Publication Date : 07/11/2025

(54) Title of the invention : INFORMATION PROCESSING DEVICE, INFORMATION PROCESSING METHOD, AND PROGRAM

(51) International classification	:G16C 20/30, G16C 20/80
(31) Priority Document No	:2023-059424
(32) Priority Date	:31/03/2023
(33) Name of priority country	:Japan
(86) International Application No	:PCT/JP2024/001438
Filing Date	:19/01/2024
(87) International Publication No	:WO 2024/202433
(61) Patent of Addition to Application Number	:NA
Filing Date	:NA
(62) Divisional to Application Number	:NA
Filing Date	:NA

(71)**Name of Applicant :**
1)FUJIFILM CORPORATION
Address of Applicant :26-30, Nishiazabu 2-chome, Minato-ku, Tokyo 1068620 Japan
(72)**Name of Inventor :**
1)TATESHITA, Masakazu
2)YARIMIZU, Hirokazu
3)HIKIDA, Yasushi
4)MURAKAMI, Ryoichi
5)SUGIYAMA, Satoshi

(57) Abstract :
An information processing device comprising a processor. The processor outputs, to a display unit, an inquiry image that is capable of displaying an evaluation result of a toxicity evaluation pertaining to a compound, the inquiry image including an operation part that receives an operation for transmitting an inquiry notification about the evaluation result to a destination designated in advance. When the operation part is operated, the processor executes control for incorporating information enabling at least part of the evaluation result to be shared with the destination into the inquiry notification and transmitting the inquiry notification to the destination.

No. of Pages : 32 No. of Claims : 10

(12) PATENT APPLICATION PUBLICATION
(21) Application No.202517094660 A
(19) INDIA
(22) Date of filing of Application :01/10/2025
(43) Publication Date : 07/11/2025

(54) Title of the invention : SYSTEMS AND METHODS FOR PROVISIONING TRANSACTION CARDS TO MULTIPLE MERCHANTS

(51) International classification	:G06Q 20/34, G06Q 20/40
(31) Priority Document No	:18/136497
(32) Priority Date	:19/04/2023
(33) Name of priority country	:U.S.A.
(86) International Application No	:PCT/US2024/023689
Filing Date	:09/04/2024
(87) International Publication No	:WO 2024/220277
(61) Patent of Addition to Application Number	:NA
Filing Date	:NA
(62) Divisional to Application Number	:NA
Filing Date	:NA

(71)**Name of Applicant :**
1)CAPITAL ONE SERVICES, LLC
Address of Applicant :1680 Capital One Drive McLean, Virginia 22102 U.S.A.
(72)**Name of Inventor :**
1)KUMAR, Kaush
2)RULE, Jeffrey
3)WANG, Jinlian

(57) Abstract :
Systems, methods, apparatuses, and computer-readable media for provisioning transaction cards to multiple merchants from a single access point are described. For example, a method may include receiving a payment card number request, sending a contactless payment card step-up authentication request to the user device, receiving, from the user device, encrypted authentication information obtained from the contactless payment card in response to the contactless payment card step-up request, authenticating the encrypted authentication information received from the user device, granting a token to identify a communication session established with the merchant, which may enable a continued exchange of data with the merchant, and using the token to identify the respective communication session established with the merchant, providing account information to the merchant to associate a respective merchant account with a user of the contactless payment card.

No. of Pages : 49 No. of Claims : 20

(12) PATENT APPLICATION PUBLICATION
(21) Application No.202517059171 A
(19) INDIA
(22) Date of filing of Application :20/06/2025
(43) Publication Date : 07/11/2025

(54) Title of the invention : DEVICE

(51) International classification :F15B 1/04
(31) Priority Document No :10 2023 002 019.2
(32) Priority Date :17/05/2023
(33) Name of priority country :Germany
(86) International Application No :PCT/EP2024/060281
Filing Date :16/04/2024
(87) International Publication No :WO 2024/235546
(61) Patent of Addition to Application Number :NA
Filing Date :NA
(62) Divisional to Application Number :NA
Filing Date :NA

(71)**Name of Applicant :**
1)HYDAC TECHNOLOGY GMBH
Address of Applicant :Industriestraße 66280 Sulzbach/Saar Germany
(72)**Name of Inventor :**
1)WEBER, Norbert
2)ZIMMER, Yannik
3)MANN, Sven Daniel Günter

(57) Abstract :
The invention relates to a device, in particular for volume compensation in fluid circuits, at least consisting of a device housing (10) and a compensating element (12) which is movably guided therein, that can be acted on by a fluid pressure (p) and is supported on an energy storage device (14), characterised in that the device housing (10) has at least two housing parts (16, 18), which are arranged one behind the other when viewed along the longitudinal axis (20) of the device housing (10), in that the adjacent housing parts (16, 18) differ in their free cross-sectional areas, and in that the transition from one housing part (16) to the subsequent, adjacent housing part (18) is in the form of a step (22).

No. of Pages : 12 No. of Claims : 16

(12) PATENT APPLICATION PUBLICATION
(21) Application No.202517062220 A
(19) INDIA
(22) Date of filing of Application :30/06/2025
(43) Publication Date : 07/11/2025

(54) Title of the invention : MODIFIED MADARIAGA VIRUSES, SELF-REPLICATING RNA CONSTRUCTS, AND USES THEREOF

(51) International classification	:C12N 7/00, C12N 15/86, C12N 15/85, A61P 35/00, A61K 39/00
(31) Priority Document No	:63/385556
(32) Priority Date	:30/11/2022
(33) Name of priority country	:U.S.A.
(86) International Application No	:PCT/US2023/081434
Filing Date	:28/11/2023
(87) International Publication No	:WO 2024/118659
(61) Patent of Addition to Application Number	:NA
Filing Date	:NA
(62) Divisional to Application Number	:NA
Filing Date	:NA

(71)**Name of Applicant :**
1)REPLICATE BIOSCIENCE, INC.
Address of Applicant :11558 Sorrento Valley Road, Suite 6 San Diego, California 92121 U.S.A.
(72)**Name of Inventor :**
1)WANG, Nathaniel Stephen
2)MIYAKE-STONER, Shigeki Joseph

(57) Abstract :
The present disclosure relates to the field of molecular virology, including nucleic acid molecules comprising modified viral genomes or self-replicating RNAs, pharmaceutical compositions containing the same, and the use of such nucleic acid molecules and compositions for production of desired products in cell cultures or in a living body. Also provided are methods for eliciting a pharmacodynamic effect in a subject in need thereof, as well as methods for preventing and/or treating various health conditions.

No. of Pages : 70 No. of Claims : 48

(12) PATENT APPLICATION PUBLICATION
(21) Application No.202517064827 A
(19) INDIA
(22) Date of filing of Application :08/07/2025
(43) Publication Date : 07/11/2025

(54) Title of the invention : DISPLAY DEVICE

(51) International classification	:H10K 59/80, C08L 67/02, C08L 79/08, C08L 77/00, C08L 75/04
(31) Priority Document No	:10-2023-0094289
(32) Priority Date	:20/07/2023
(33) Name of priority country	:Republic of Korea
(86) International Application No	:PCT/KR2024/004232
Filing Date	:02/04/2024
(87) International Publication No	:WO 2025/018503
(61) Patent of Addition to Application Number	:NA
Filing Date	:NA
(62) Divisional to Application Number	:NA
Filing Date	:NA

(71)**Name of Applicant :**
1)SAMSUNG DISPLAY CO., LTD.
Address of Applicant :1, Samsung-ro, Giheung-Gu Yongin-Si Gyeonggi-do 17113 Republic of Korea
(72)**Name of Inventor :**
1)SEONG, Ju Yeop
2)KIM, Jong Hyuck
3)MYUNG, Man Sik
4)PARK, Sung June
5)LEE, Hee Kwon
6)JANG, Jae Soo
7)JEONG, Jae Won
8)CHOI, Sung Chul

(57) Abstract :
A display device is provided. The display device comprises: a display panel including first and second surfaces facing each other; an elastic member disposed on the first surface; a first rigid member disposed on the elastic member; and a panel support member disposed on the second surface, wherein the first rigid member includes at least one from among polyethyleneterephthalate (PET), polyimide, and ultra-thin glass (UTG), and the elastic member includes at least one from among a dilatant, polyether block amide (PEBA), and thermoplastic polyurethane (TPU).

No. of Pages : 40 No. of Claims : 25

(12) PATENT APPLICATION PUBLICATION
(21) Application No.202517064973 A
(19) INDIA
(22) Date of filing of Application :08/07/2025
(43) Publication Date : 07/11/2025

(54) Title of the invention : METHOD AND APPARATUS USED IN COMMUNICATION NODE FOR WIRELESS COMMUNICATION

(51) International classification	:H04W 24/08
(31) Priority Document No	:202211586774.8
(32) Priority Date	:10/12/2022
(33) Name of priority country	:China
(86) International Application No	:PCT/CN2023/133157
Filing Date	:22/11/2023
(87) International Publication No	:WO 2024/120191
(61) Patent of Addition to Application Number	:NA
Filing Date	:NA
(62) Divisional to Application Number	:NA
Filing Date	:NA

(71)**Name of Applicant :**
1)SHANGHAI LANGBO COMMUNICATION TECHNOLOGY COMPANY LIMITED
Address of Applicant :Room A2117, Building B, No.555, DongChuan Road Minhang District, Shanghai 200240 China
(72)**Name of Inventor :**
1)YU, Qiaoling
2)ZHANG, Xiaobo

(57) Abstract :
Disclosed in the present application are a method and apparatus used in a communication node for wireless communication. As a response to each condition in a first set of conditions being satisfied, a communication node transmitting a first wireless signal; together with the transmission of the first wireless signal, the communication node detecting a first information block on a second cell; the first information block comprising at least one of SS, MIB, and SIB1; the first set of conditions comprising at least one of a first condition or a second condition, the first condition being related to the link quality of at least a first cell, and the second condition comprising that the second cell is a network energy-saving cell; and of the first cell and the second cell, at least the latter does not have a legitimate SIB1 or a legitimate SSB. The present application reduces signaling overhead and network energy consumption.

No. of Pages : 53 No. of Claims : 10

(12) PATENT APPLICATION PUBLICATION
(21) Application No.202517057647 A
(19) INDIA
(22) Date of filing of Application :16/06/2025
(43) Publication Date : 07/11/2025

(54) Title of the invention : DISTORTION INFORMATION FOR EACH ITERATION OF VERTICES RECONSTRUCTION

(51) International classification	:H04N 19/597, H04N 19/184, H04N 19/119, H04N 19/70
(31) Priority Document No	:63/460220
(32) Priority Date	:18/04/2023
(33) Name of priority country	:U.S.A.
(86) International Application No	:PCT/KR2024/005167
Filing Date	:17/04/2024
(87) International Publication No	:WO 2024/219825
(61) Patent of Addition to Application Number	:NA
Filing Date	:NA
(62) Divisional to Application Number	:NA
Filing Date	:NA

(71)**Name of Applicant :**
1)SAMSUNG ELECTRONICS CO., LTD.
Address of Applicant :129, Samsung-ro, Yeongtong-gu, Suwon-si, Gyeonggi-do 16677 Republic of Korea
(72)**Name of Inventor :**
1)LIM, Youngkwon
2)JOSHI, Rajan Laxman
3)BUDAGAVI, Madhukar

(57) Abstract :
An apparatus includes a communication interface configured to receive a compressed bitstream including a base mesh sub-bitstream and a processor operably coupled to the communication interface. The processor is configured to decode a plurality of submeshes from the base mesh sub-bitstream. The processor is also configured to subdivide a submesh of the plurality of submeshes according to a subdivision iteration count to generate at least one subdivided submesh, including determine a number of vertex positions for the at least one subdivided submesh by use of a number of vertices associated with an original submesh and by use of distortion information between the original submesh and a base mesh at each subdivision iteration associated with the subdivision iteration count. The processor is also configured to reconstruct at least a portion of a mesh-frame using the vertex positions corresponding to the at least one subdivided submesh.

No. of Pages : 34 No. of Claims : 15

(12) PATENT APPLICATION PUBLICATION
(21) Application No.202517065111 A
(19) INDIA
(22) Date of filing of Application :08/07/2025
(43) Publication Date : 07/11/2025

(54) Title of the invention : PROTEINS, METHODS, AND SYSTEMS FOR SUBCELLULAR LOCALIZATION OF PROTEINS FOR POST-TRANSLATION MODIFICATIONS

(51) International classification	:C12N 9/12, C12P 21/02, C12R 1/645
(31) Priority Document No	:63/436041
(32) Priority Date	:29/12/2022
(33) Name of priority country	:U.S.A.
(86) International Application No	:PCT/EP2023/088026
Filing Date	:29/12/2023
(87) International Publication No	:WO 2024/141661
(61) Patent of Addition to Application Number	:NA
Filing Date	:NA
(62) Divisional to Application Number	:NA
Filing Date	:NA

(71)**Name of Applicant :**
1)BETTER DAIRY LIMITED
Address of Applicant :24 White Post Lane London E9 5SZ U.K.
(72)**Name of Inventor :**
1)GERHARTZ, Bernd Alfons
2)ROYLE, Kate
3)LÓPEZ, Christian Arenas
4)COTRIM, Camila Aparecida
5)GIARDINA, Agata

(57) Abstract :
The present disclosure provides for proteins, methods, systems for directing enzymes for generating post-translational modifications on proteins to a particular subcellular location. Specifically, kinases for phosphorylation of proteins containing one or more sites susceptible to phosphorylation are disclosed, also with methods and systems for phosphorylating proteins of interest, such as proteins having nutritional and therapeutic uses.

No. of Pages : 207 No. of Claims : 107

(12) PATENT APPLICATION PUBLICATION
(21) Application No.202517065209 A
(19) INDIA
(22) Date of filing of Application :09/07/2025
(43) Publication Date : 07/11/2025

(54) Title of the invention : GRID ADAPTER SYSTEMS AND METHODS

(51) International classification	:H02J 15/00, B60L 53/50, B60L 53/60
(31) Priority Document No	:63/431472
(32) Priority Date	:09/12/2022
(33) Name of priority country	:U.S.A.
(86) International Application No	:PCT/CA2023/051625
Filing Date	:07/12/2023
(87) International Publication No	:WO 2024/119273
(61) Patent of Addition to Application Number	:NA
Filing Date	:NA
(62) Divisional to Application Number	:NA
Filing Date	:NA

(71)**Name of Applicant :**
1)ADAPTR, INC.
Address of Applicant :70 ALEXANDER STREET TORONTO, Ontario M4Y 3B6 Canada
(72)**Name of Inventor :**
1)SHAHRIAR, Hassan
2)EL-DEIB, Amgad

(57) Abstract :
Embodiments described herein include systems and methods for managing electrical power among various energy generation, storage, and consumption systems, including micro-grids or nano-grids. Computing systems and electrical hardware send and receive electrical power, to or from various energy storage, transfer, and consumption sites, particularly where certain nano-grids are not electrically wired to the energy generation and storage subsystems. A grid adapter receives energy from various sources, reduces noise in the electrical waveform (e.g., harmonics), and determines an amount of power to deliver to nano-grids via electrical connections or delivery vehicles to achieve acceptable operation according to grid codes or other operational configurations. A storage system may include a flow battery that exchanges electricity, based on required power or surplus power, with delivery vehicles according to an electrolyte swap for the flow battery.

No. of Pages : 38 No. of Claims : 20

(12) PATENT APPLICATION PUBLICATION
(21) Application No.202517065544 A
(19) INDIA
(22) Date of filing of Application :09/07/2025
(43) Publication Date : 07/11/2025

(54) Title of the invention : SULFUR-CONTAINING IONIZABLE LIPIDS FOR THE DELIVERY OF NUCLEIC ACIDS AND OTHER THERAPEUTIC AGENTS

(51) International classification	:C07C 323/25, A61K 9/51, A61K 47/20, A61K 47/22, C07C 323/12
(31) Priority Document No	:63/434506
(32) Priority Date	:22/12/2022
(33) Name of priority country	:U.S.A.
(86) International Application No	:PCT/CA2023/051727
Filing Date	:21/12/2023
(87) International Publication No	:WO 2024/130421
(61) Patent of Addition to Application Number	:NA
Filing Date	:NA
(62) Divisional to Application Number	:NA
Filing Date	:NA

(71)**Name of Applicant :**
1)NANOVATION THERAPEUTICS INC.
Address of Applicant :2665 East Mall, 2nd Floor Vancouver, British Columbia V6T 1Z4 Canada
(72)**Name of Inventor :**
1)ARNOLD, Deaglan
2)ATMURI, N. D. Prasad
3)SAADATI, Fariba
4)TRAN, Huy
5)CIUFOLINI, Marco A

(57) Abstract :
Provided herein is an ionizable, cationic amino lipid or a pharmaceutically acceptable salt thereof. The ionizable, cationic amino lipid has: a protonatable amino head group; two lipophilic chains, wherein the protonatable amino head group has a central carbon atom to which each of the two lipophilic chains are directly bonded; at least one of the two lipophilic chains has a structure of Formula C: Formula C wherein E is an ester in either orientation. The compounds may be formulated in a lipid nanoparticle for use in the delivery of charged cargo such as nucleic acid.

No. of Pages : 117 No. of Claims : 10

(12) PATENT APPLICATION PUBLICATION
(21) Application No.202517065610 A
(19) INDIA
(22) Date of filing of Application :09/07/2025
(43) Publication Date : 07/11/2025

(54) Title of the invention : SYSTEM AND METHOD FOR EVENT DETECTION AND TRACKING USING OPTICAL AND ACOUSTIC SIGNALS

(51) International classification	:G01S 11/16, F41G 3/14
(31) Priority Document No	:299059
(32) Priority Date	:12/12/2022
(33) Name of priority country	:Israel
(86) International Application No	:PCT/IL2023/051258
Filing Date	:11/12/2023
(87) International Publication No	:WO 2024/127392
(61) Patent of Addition to Application Number	:NA
Filing Date	:NA
(62) Divisional to Application Number	:NA
Filing Date	:NA

(71)**Name of Applicant :**
1)ELTA SYSTEMS LTD.
Address of Applicant :100 Yitzchak Hanassi Blvd. P.O.B. 330 7710201 Ashdod Israel
(72)**Name of Inventor :**
1)NISSIM, Sasson
2)ROVINSKY, Jacob
3)FRENKEL, Noam
4)SHARON, Erez

(57) Abstract :
A method and respective system are described, suitable for detecting location and/or path of event. The method comprises obtaining input data comprising optical input data from at least one optical sensor arrangement and acoustic input data from an acoustic sensor arrangement. Processing the input data to detect a first signal indicative of selected events in at least one of the optical input data and acoustic input data, and in response to detecting an event registering a time of collection of the first signal and determining an estimated location of the event. Processing input data of other one of the optical and acoustic input data to determine input signal indicative of a second signal associated with the event. Determining time of collection of the second signal and determining a time difference between time of collection of the event. Utilizing the time difference to determine event location.

No. of Pages : 25 No. of Claims : 42

(12) PATENT APPLICATION PUBLICATION
(21) Application No.202517094412 A
(19) INDIA
(22) Date of filing of Application :01/10/2025
(43) Publication Date : 07/11/2025

(54) Title of the invention : METHOD AND APPARATUS FOR MULTIPLE TIMING ADVANCE GROUPS FOR MULTI-TRANSMISSION/RECEPTION POINT IN A WIRELESS COMMUNICATION SYSTEM

(51) International classification	:H04W 56/00, H04L 1/18, H04W 72/231, H04W 72/21, H04W 74/00
(31) Priority Document No	:63/454873
(32) Priority Date	:27/03/2023
(33) Name of priority country	:U.S.A.
(86) International Application No	:PCT/KR2024/095637
Filing Date	:27/03/2024
(87) International Publication No	:WO 2024/205380
(61) Patent of Addition to Application Number	:NA
Filing Date	:NA
(62) Divisional to Application Number	:NA
Filing Date	:NA

(71)**Name of Applicant :**
1)SAMSUNG ELECTRONICS CO., LTD.
Address of Applicant :129, Samsung-ro, Yeongtong-gu Suwon-si Gyeonggi-do 16677 Republic of Korea
(72)**Name of Inventor :**
1)LENG, Shiyang
2)AGIWAL, Anil

(57) Abstract :
The disclosure relates to a 5G or 6G communication system for supporting a higher data transmission rate. Specifically, the disclosure related to methods and apparatuses for a multiple timing advance groups for a multi-TRP operation in a wireless communication system. A method of a UE comprises: determining whether a serving cell is configured with more than one TAG and a timer of a TAG associated with a TCI state stops or expires for a first HARQ feedback in a first HARQ process on the serving cell or a second HARQ feedback in a second HARQ process on the serving cell; determining to not generate a first indication indicating a lower layer to generate an ACK corresponding to a data transmission in a TB in the first HARQ process; and determining to not generate a second indication indicating the lower layer to generate an ACK corresponding to a data transmission in a TB in the second HARQ process when the serving cell is configured with a sl-PUCCH-Config.

No. of Pages : 46 No. of Claims : 15

(12) PATENT APPLICATION PUBLICATION
(21) Application No.202517060304 A
(19) INDIA
(22) Date of filing of Application :24/06/2025
(43) Publication Date : 07/11/2025

(54) Title of the invention : GEMSTONE HOLDER

(51) International classification :G01N 21/87
(31) Priority Document No :2219220.7
(32) Priority Date :20/12/2022
(33) Name of priority country :U.K.
(86) International Application No :PCT/EP2023/085562
Filing Date :13/12/2023
(87) International Publication No :WO 2024/132765
(61) Patent of Addition to Application Number :NA
Filing Date :NA
(62) Divisional to Application Number :NA
Filing Date :NA

(71)**Name of Applicant :**
1)DE BEERS UK LTD
Address of Applicant :17 Charterhouse Street London EC1N 6RA U.K.
(72)**Name of Inventor :**
1)SUGANTHAN, Shan
2)BODHINAYAKE, Sud
3)FELIX, James
4)NIKIFOROV, Ivan

(57) Abstract :
A reorientation assembly comprises at least two gripping members, wherein the at least two gripping members are moveable with respect to each other. The at least two gripping members, when abutting each other, define an opening, the opening comprising a tapered constriction portion and a gripping portion, the tapered constriction portion defining an opening tapered towards the gripping portion.

No. of Pages : 16 No. of Claims : 18

(12) PATENT APPLICATION PUBLICATION
(21) Application No.202517060310 A
(19) INDIA
(22) Date of filing of Application :24/06/2025
(43) Publication Date : 07/11/2025

(54) Title of the invention : OPTICAL CHARACTERISATION OF A GEMSTONE

(51) International classification	:G01N 21/87, G01N 21/23, G01N 21/88
(31) Priority Document No	:2219219.9
(32) Priority Date	:20/12/2022
(33) Name of priority country	:U.K.
(86) International Application No	:PCT/EP2023/085549
Filing Date	:13/12/2023
(87) International Publication No	:WO 2024/132761
(61) Patent of Addition to Application Number	:NA
Filing Date	:NA
(62) Divisional to Application Number	:NA
Filing Date	:NA

(71)**Name of Applicant :**
1)DE BEERS UK LTD
Address of Applicant :17 Charterhouse Street London EC1N 6RA U.K.
(72)**Name of Inventor :**
1)SUGANTHAN, Shan
2)BODHINAYAKE, Sud
3)FELIX, James
4)POWELL, Graham
5)LANIGAN, Peter
6)NIKIFOROV, Ivan

(57) Abstract :
An optical characterisation method of a gemstone is provided, the gemstone being at least partially transparent at a first wavelength of light and at a second wavelength of light. A first step of the method comprises illuminating the gemstone with diffused light at the first wavelength, detecting transmission of light through the gemstone at the first wavelength with a first optical detector, and generating a bright field digital image. The presence of inclusions in the gemstone is determined from the bright field image. A second step of the of the method comprises illuminating the gemstone with collimated light along an optical axis at the second wavelength, detecting light propagating at a non-zero angle with respect to the optical axis after interaction with the gemstone, and generating a second digital image. The presence of inclusions in the gemstone is determined from bright field image and the presence of cracks from the dark field image.

No. of Pages : 22 No. of Claims : 24

(12) PATENT APPLICATION PUBLICATION

(21) Application No.202517063667 A

(19) INDIA

(22) Date of filing of Application :03/07/2025

(43) Publication Date : 07/11/2025

(54) Title of the invention : SIDELINK LOGICAL CHANNEL PRIORITIZATION (LCP) PROCEDURE BASED ON A SHARED CHANNEL OCCUPANCY TIME (COT)

(51) International classification	:H04W 74/0808, H04W 74/00
(31) Priority Document No	:63/494103
(32) Priority Date	:04/04/2023
(33) Name of priority country	:U.S.A.
(86) International Application No	:PCT/IB2024/053252
Filing Date	:03/04/2024
(87) International Publication No	:WO 2024/166084
(61) Patent of Addition to Application Number	:NA
Filing Date	:NA
(62) Divisional to Application Number	:NA
Filing Date	:NA

(71)**Name of Applicant :**

1)LENOVO (SINGAPORE) PTE. LTD.

Address of Applicant :151, Lorong Chuan #02-01, New Tech Park Singapore 556741 Singapore

(72)**Name of Inventor :**

1)LÖHR, Joachim

2)GOLITSCHEK EDLER VON ELBWART, Alexander Johann Maria

3)GANESAN, Karthikeyan

4)BASU MALLICK, Prateek

(57) Abstract :

Various aspects of the present disclosure relate to channel occupancy time (COT) sharing for sidelink communications over unlicensed channels. For example, the systems and methods described herein enable an efficient sidelink LCP procedure by implementing an LCP procedure for sidelink communications that is based on received COT sharing indications. The LCP procedure may identify and utilize sidelink logical channels of a shared COT based on a received indication of the shared COT and transmit data via the shared COT using the sidelink logical channels that satisfy the LCP procedure conditions. Further, by receiving the indication of the shared COT, the UE may perform a type 2 LBT procedure when accessing the shared channel.

No. of Pages : 31 No. of Claims : 20

(12) PATENT APPLICATION PUBLICATION
(21) Application No.202517094751 A
(19) INDIA
(22) Date of filing of Application :01/10/2025
(43) Publication Date : 07/11/2025

(54) Title of the invention : GROWTH HORMONE CONTAINING FORMULATION AND METHOD OF USE

(51) International classification	:A01P 21/00, A01H 4/00, A01N 37/10, C12N 5/04
(31) Priority Document No	:63/456913
(32) Priority Date	:04/04/2023
(33) Name of priority country	:U.S.A.
(86) International Application No	:PCT/US2024/022747
Filing Date	:03/04/2024
(87) International Publication No	:WO 2024/211350
(61) Patent of Addition to Application Number	:NA
Filing Date	:NA
(62) Divisional to Application Number	:NA
Filing Date	:NA

(71)**Name of Applicant :**
1)AGRITEIN, LLC
Address of Applicant :2018 Jefferson St. Mandeville, LA 70448 U.S.A.
(72)**Name of Inventor :**
1)JOHNSON, Louis, B.

(57) Abstract :
A growth hormone formulation includes an enzyme inactivating component as creatine and a preservative. The formulation can also include a fertilizing additive, and a surfactant. The growth hormone can be a natural one such as that found in kelp or a synthetic one or a combination of both.

No. of Pages : 15 No. of Claims : 23

(12) PATENT APPLICATION PUBLICATION
(21) Application No.202517094752 A
(19) INDIA
(22) Date of filing of Application :01/10/2025
(43) Publication Date : 07/11/2025

(54) Title of the invention : HYDROENTANGLED NONWOVEN COMPRISING CELLULOSIC FILAMENTS

(51) International classification	:D04H 1/26, D04H 1/4258, D04H 1/4382, D04H 1/732, D04H 3/013
(31) Priority Document No	:NA
(32) Priority Date	:NA
(33) Name of priority country	:NA
(86) International Application No	:PCT/EP2023/061025
Filing Date	:26/04/2023
(87) International Publication No	:WO 2024/223041
(61) Patent of Addition to Application Number	:NA
Filing Date	:NA
(62) Divisional to Application Number	:NA
Filing Date	:NA

(71)**Name of Applicant :**
1)ESSITY HYGIENE AND HEALTH AKTIEBOLAG
Address of Applicant :405 03 GÖTEBORG Sweden
(72)**Name of Inventor :**
1)NIHLSTRAND, Anna
2)STRANDQVIST, Mikael
3)PHAN, Binh

(57) Abstract :
A hydroentangled nonwoven comprising manmade cellulosic filaments, natural cellulosic fibres, and manmade staple fibres. The manmade staple fibres have a length of 10 to 20 mm. A wipe comprising a hydroentangled nonwoven. A method of producing a nonwoven, wherein a web of manmade cellulosic filaments is provided and natural cellulosic fibres and manmade staple fibres are wet-formed on top of said web of manmade cellulosic filaments, thus forming a fibrous web comprising said manmade cellulosic filaments, natural cellulosic fibres and manmade staple fibres. The fibrous web is subsequently hydroentangled to form a nonwoven. A method of producing a wipe.

No. of Pages : 12 No. of Claims : 15

(12) PATENT APPLICATION PUBLICATION
(21) Application No.202517064563 A
(19) INDIA
(22) Date of filing of Application :07/07/2025
(43) Publication Date : 07/11/2025

(54) Title of the invention : PROCESS FOR PRODUCING A FILM, PROCESS FOR PRODUCING A GRANULATE, A FILM AND A PLASTIC-FORMING LINE

(51) International classification	:B29C 48/00, B29C 48/05, B29C 48/08
(31) Priority Document No	:10 2022 132 893.7
(32) Priority Date	:10/12/2022
(33) Name of priority country	:Germany
(86) International Application No	:PCT/EP2023/085175
Filing Date	:11/12/2023
(87) International Publication No	:WO 2024/121435
(61) Patent of Addition to Application Number	:NA
Filing Date	:NA
(62) Divisional to Application Number	:NA
Filing Date	:NA

(71)**Name of Applicant :**
1)REIFENHÄUSER GMBH & CO. KG MASCHINENFABRIK
Address of Applicant :Spicher Str. 46 53844 Troisdorf Germany
(72)**Name of Inventor :**
1)LETTOWSKY, Dr. Christoph

(57) Abstract :
The invention relates to a process for producing a film having at least one layer that has a polymer blend comprising at least a first polymer and a second polymer, characterised in that at least two of the polymers involved are incompatible with one another, and in that the polymer blend is processed in an extruder. The invention also relates to a film comprising at least one layer that has a polymer blend comprising at least a first polymer and a second polymer, characterised in that at least two of the polymers involved are incompatible with one another. The invention also relates to a plastic-forming line, in particular a blown-film line or flat-film extrusion line, for producing a film having at least one layer that has a polymer blend comprising at least a first polymer and a second polymer, characterised in that at least two of the polymers involved are incompatible with one another.

No. of Pages : 65 No. of Claims : 61

(12) PATENT APPLICATION PUBLICATION
(21) Application No.202517064689 A
(19) INDIA
(22) Date of filing of Application :07/07/2025
(43) Publication Date : 07/11/2025

(54) Title of the invention : METHOD AND APPARATUS USED IN COMMUNICATION NODE FOR WIRELESS COMMUNICATION

(51) International classification	:H04L 5/00, H04W 48/10
(31) Priority Document No	:202211568827.3
(32) Priority Date	:08/12/2022
(33) Name of priority country	:China
(86) International Application No	:PCT/CN2023/131680
Filing Date	:15/11/2023
(87) International Publication No	:WO 2024/120139
(61) Patent of Addition to Application Number	:NA
Filing Date	:NA
(62) Divisional to Application Number	:NA
Filing Date	:NA

(71)**Name of Applicant :**
1)SHANGHAI LANGBO COMMUNICATION TECHNOLOGY COMPANY LIMITED
Address of Applicant :Room A2117, Building B No. 555, DongChuan Road Minhang District Shanghai 200240 China
(72)**Name of Inventor :**
1)YU, Qiaoling
2)ZHANG, Xiaobo

(57) Abstract :
A method and apparatus used in a communication node for wireless communication. The communication node receiving first broadcast information on a PBCH of a first cell, wherein the first broadcast information comprises a first bit group, and at least one bit comprised in the first bit group does not belong to a cellBarred domain and does not belong to an intraFreqReselection domain; and obtaining an SIB of the first cell, wherein the SIB of the first cell comprises at least SIB1. The obtaining an SIB of the first cell relies on the first bit group. The first broadcast information comprises at least the cellBarred domain in the cellBarred domain and the intraFreqReselection domain. A first node is not a RedCap user equipment. The first node cannot support a NTN or access of the first node is not for the NTN. By means of the method, the cell access performance can be optimized.

No. of Pages : 60 No. of Claims : 12

(12) PATENT APPLICATION PUBLICATION
(21) Application No.202517064694 A
(19) INDIA
(22) Date of filing of Application :07/07/2025
(43) Publication Date : 07/11/2025

(54) Title of the invention : METHODS AND APPARATUS TO MONITOR AND MANAGE LOADING DOCKS AND FACILITY OPERATIONS

(51) International classification	:G06Q 10/08, G08B 21/02
(31) Priority Document No	:63/386620
(32) Priority Date	:08/12/2022
(33) Name of priority country	:U.S.A.
(86) International Application No	:PCT/US2023/083071
Filing Date	:08/12/2023
(87) International Publication No	:WO 2024/124101
(61) Patent of Addition to Application Number	:NA
Filing Date	:NA
(62) Divisional to Application Number	:NA
Filing Date	:NA

(71)**Name of Applicant :**
1)RITE HITE HOLDING CORPORATION
Address of Applicant :195 S. Rite-Hite Way Milwaukee, Wisconsin 53204 U.S.A.
(72)**Name of Inventor :**
1)BOERGER, James
2)BOMHACK, Micaela
3)KUBLY, Timothy
4)MEWS, Richard
5)NEEMUCHWALA, Moiz

(57) Abstract :
Methods, apparatus, systems, and articles of manufacture to monitor and manage loading docks and facility operations are disclosed. An example apparatus includes processor circuitry to: identify a first occurrence of a safety event based on outputs of sensors associated with at least one of doors or docks, the event associated with a first event type of a plurality of event types; determine a time of day different instances of the event occurred within a given period of time; determine a number of at least one of different doors or different docks associated with the different instances of the event; select a particular corrective action based on the time of day of the different instances of the event and based on the number of the at least one of the different doors or the different docks; and cause an output device to output an indication of the particular corrective action.

No. of Pages : 62 No. of Claims : 33

(12) PATENT APPLICATION PUBLICATION

(21) Application No.202517094665 A

(19) INDIA

(22) Date of filing of Application :01/10/2025

(43) Publication Date : 07/11/2025

(54) Title of the invention : SYSTEMS AND METHODS OF SECURE MERCHANT PAYMENT OVER MESSAGING PLATFORM USING A CONTACTLESS CARD

(51) International classification	:G06Q 20/40, G06F 21/31, G06F 21/35
(31) Priority Document No	:18/120513
(32) Priority Date	:13/03/2023
(33) Name of priority country	:U.S.A.
(86) International Application No	:PCT/US2024/019523
Filing Date	:12/03/2024
(87) International Publication No	:WO 2024/191995
(61) Patent of Addition to Application Number	:NA
Filing Date	:NA
(62) Divisional to Application Number	:NA
Filing Date	:NA

(71)**Name of Applicant :**

1)CAPITAL ONE SERVICES LLC

Address of Applicant :1680 Capital One Drive McLean, Virginia 22102 U.S.A.

(72)**Name of Inventor :**

1)OSBORN, Kevin

2)RULE, Jeffrey

3)ILINCIC, Rajko

(57) Abstract :

A method is provided including: receiving, by a server from a user device, a cryptogram of a contactless card, wherein the user device receives a payment request message from a merchant device, and the user device receives the cryptogram from a contactless card upon taping the contactless card to the user device by a user prompted by the payment request message; validating and decrypting, by the server, the cryptogram; extracting, by the server, from the decrypted cryptogram a unique customer identifier associated with the user; verifying, by the server, the unique customer identifier; retrieving, by the server from a database, account information of the user; and calling, by the sever, one or more application programming interfaces (APIs) of the merchant device to make a payment in response to the payment request message; and provisioning, by the server, the account information to the merchant device via the APIs.

No. of Pages : 56 No. of Claims : 20

(12) PATENT APPLICATION PUBLICATION
(21) Application No.202514032550 A
(19) INDIA
(22) Date of filing of Application :02/04/2025
(43) Publication Date : 07/11/2025

(54) Title of the invention : IMAGE PROCESSING SYSTEM FOR DETERMINING SATELLITE CONFIGURATION AND PROPERTIES

(51) International classification	:H04H0040900000, B64G0001100000, H04N0001000000, B64G0001220000, H04B0007185000
(31) Priority Document No	:18/632,048
(32) Priority Date	:10/04/2024
(33) Name of priority country	:U.S.A.
(86) International Application No	:NA
Filing Date	:NA
(87) International Publication No	: NA
(61) Patent of Addition to Application Number	:NA
Filing Date	:NA
(62) Divisional to Application Number	:NA
Filing Date	:NA

(71)**Name of Applicant :**
1)The Boeing Company
Address of Applicant :929 Long Bridge Drive, Arlington, VA 22202, U.S.A. U.S.A.
(72)**Name of Inventor :**
1)GERWE, David Roderick
2)OKKELBERG, Klaus Zhang

(57) Abstract :
A method (600) for satellite component classification includes, at a satellite classification system (100), receiving a test image (104) depicting a satellite (108), the satellite (108) having a hardware component configuration (110) that is unknown to the satellite classification system (100). The test image (104) is input to a satellite classification model (102) trained, based at least in part on a plurality of training satellite images (402), to generate output image segmentation maps for input satellite images. The satellite classification model (102) outputs an output image segmentation map (112) for the test image (104), one or more position parameters (118) for the satellite (108), and one or more attitude parameters (116) for the satellite (108). The output segmentation map (112) includes a plurality of map pixels (114) corresponding to a plurality of image pixels (106) in the test image (104), wherein pixel values of the plurality of map pixels(114) classify corresponding image pixels (106) of the test image (104) as depicting different hardware components of the satellite (108).

No. of Pages : 48 No. of Claims : 20

(12) PATENT APPLICATION PUBLICATION
(19) INDIA
(22) Date of filing of Application :02/04/2025
(21) Application No.202514032557 A
(43) Publication Date : 07/11/2025

(54) Title of the invention : DISPLAY DEVICE AND ELECTRONIC DEVICE INCLUDING THE SAME

(51) International classification	:G06F0001160000, G02F0001133500, G06F0003041000, H10K0050110000, G02F0001133570
(31) Priority Document No	:10-2024-0045365
(32) Priority Date	:03/04/2024
(33) Name of priority country	:Republic of Korea
(86) International Application No	:NA
Filing Date	:NA
(87) International Publication No	: NA
(61) Patent of Addition to Application Number	:NA
Filing Date	:NA
(62) Divisional to Application Number	:NA
Filing Date	:NA

(71)**Name of Applicant :**
1)SAMSUNG DISPLAY CO., LTD.
Address of Applicant :1, Samsung-Ro, Giheung-Gu, Yongin-si, Gyeonggi-Do, Republic of Korea Republic of Korea
(72)**Name of Inventor :**
1)CHANG-YEOL LEE
2)JAEWON KIM
3)JOONG-SOO MOON
4)YOUNGJIN CHO
5)HANSOL KIM

(57) Abstract :
A display device includes: a substrate (SUB) having a display area (DA) and a non-display area (NDA) adjacent to the display area (DA); a plurality of pixels (PX) on the substrate (SUB), and each of which comprises a transistor (TR1, TR2, TR3) and a light emitting element (OLED) connected to the transistor (TR1, TR2, TR3); an encapsulating layer (TFE) covering the pixels (PX) and having an end (TFE_E) defined in the non-display area (NDA); a crack detecting circuit (PCD) in the non-display area (NDA) along at least a portion of an edge of the display area (DA), and comprising one end and the other end; and an antistatic circuit (ESCa, ESCb) in the non-display area (NDA) and connected to the crack detecting circuit (PCD), wherein the antistatic circuit (ESCa, ESCb) is spaced apart from the end (TFE_E) of the encapsulating layer (TFE) in a plan view.

No. of Pages : 63 No. of Claims : 20

(12) PATENT APPLICATION PUBLICATION
(21) Application No.202517062975 A
(19) INDIA
(22) Date of filing of Application :01/07/2025
(43) Publication Date : 07/11/2025

(54) Title of the invention : SYSTEM FOR MONITORING A RAILWAY VEHICLE

(51) International classification	:B61L 3/00, B61L 27/57
(31) Priority Document No	:2022131481
(32) Priority Date	:02/12/2022
(33) Name of priority country	:Russia
(86) International Application No	:PCT/RU2023/050216
Filing Date	:12/09/2023
(87) International Publication No	:WO 2024/117935
(61) Patent of Addition to Application Number	:NA
Filing Date	:NA
(62) Divisional to Application Number	:NA
Filing Date	:NA

(71)**Name of Applicant :**
1)AKTSIONERNOE OBSHCHESTVO "RUZAEVSKII ZAVOD KHIMICHESKOGO MASHINOSTROENIIA" (AO "RUZKHIMMASH")
Address of Applicant :ulitsa Titova, dom 16., stroyeniye 1 Ruzayevka, 431445 Russia
(72)**Name of Inventor :**
1)DANILENKO, Denis Viktorovich
2)STRELCHENKO, Aleksei Nikolaevich
3)GRIGOREV, Aleksei Vladimirovich

(57) Abstract :
The present system comprises an on-board GSM modem, external fixed signal receivers that are GSM cellular receivers, and measuring sensors/transducers, the signals from which are evaluated taking into account the coordinates of the location at which a change has taken place in the output signals from said sensors/transducers, wherein the system is equipped with a module for storing data obtained from the measuring sensors/transducers and from an on-board satellite communication and navigation module, said data storage module being configured to be capable of saving incoming data, including during the absence of a connection between the on-board satellite communication and navigation module and an external fixed signal receiver until the connection is restored, wherein the signals from the sensors/transducers and the signals from the on-board satellite communication and navigation module are synchronized, as well as to be capable of transmitting information via the GSM modem to an external fixed signal receiver when a connection is available, and wherein the system further comprises an autonomous power supply for the GSM module, for a microprocessor, for the on-board satellite communication and navigation module and for the data storage module.

No. of Pages : 15 No. of Claims : 5

(12) PATENT APPLICATION PUBLICATION
(19) INDIA
(22) Date of filing of Application :01/05/2024
(21) Application No.202421034531 A
(43) Publication Date : 07/11/2025

(54) Title of the invention : METHOD AND SYSTEM FOR MANAGING NETWORK COVERAGE HOLES IN A NETWORK

(51) International classification	:H04W0024020000, H04B0007060000, H04W0024080000, G01V0001280000, H04L0001180000	(71)**Name of Applicant :** **1)JIO PLATFORMS LIMITED** Address of Applicant :Office-101, Saffron, Nr. Centre Point, Panchwati 5 Rasta, Ambawadi, Ahmedabad - 380006, Gujarat, India Gujarat India
(31) Priority Document No	:NA	(72)**Name of Inventor :**
(32) Priority Date	:NA	**1)BHATNAGAR, Pradeep Kumar**
(33) Name of priority country	:NA	**2)BHATNAGAR, Aayush**
(86) International Application No	:NA	**3)SHETTY, Manoj**
Filing Date	:NA	**4)CHITALIYA, Dharmesh**
(87) International Publication No	: NA	**5)KADAM, Hanumant**
(61) Patent of Addition to Application Number	:NA	**6)VIRKAR, Sneha**
Filing Date	:NA	**7)KRISHNA, Neelabh**
(62) Divisional to Application Number	:NA	
Filing Date	:NA	

(57) Abstract :
A method (600) for managing network coverage holes in a network is disclosed. The method (600) includes identifying (602) a plurality of network coverage holes within a pre-defined coverage area associated with a first network and a second network. The method includes processing (604) the plurality of network coverage holes to assign a polygon boundary to each of the plurality of network coverage holes. The method includes performing (606) a check to identify an intersection between at least two polygon boundaries associated with at least two network coverage holes. The method includes performing (608) a check to determine whether the intersection between the at least two polygon boundaries is above a pre-defined threshold; and assigning (610) a unique polygon Identifier (ID) to the at least two network coverage holes based on the intersection of the at least two polygon boundaries, upon identifying the intersection to be above the pre-defined threshold. FIGURE.6

FIG. 6

No. of Pages : 57 No. of Claims : 14

(12) PATENT APPLICATION PUBLICATION
(21) Application No.202421034543 A
(19) INDIA
(22) Date of filing of Application :01/05/2024
(43) Publication Date : 07/11/2025

(54) Title of the invention : A SEAT FOR VEHICLE REPAIRING AND METHOD THEREOF

(51) International classification	:B25H0005000000, B60R0007040000, A61P0043000000, H04W0004800000, H04M0003510000	(71)**Name of Applicant :** **1)Trishlaa Nandan Jain** Address of Applicant :C/O Trishla Nandan Jain, Ward No. 14, Dr. Colony, Shajapur, Po. Shajapur Dist. Shajapur, Madhya Pardesh - 465001 Shajapur Madhya Pradesh India
(31) Priority Document No	:NA	(72)**Name of Inventor :**
(32) Priority Date	:NA	**1)Brahmi Jain**
(33) Name of priority country	:NA	
(86) International Application No	:NA	
Filing Date	:NA	
(87) International Publication No	: NA	
(61) Patent of Addition to Application Number	:NA	
Filing Date	:NA	
(62) Divisional to Application Number	:NA	
Filing Date	:NA	

(57) Abstract :
ABSTRACT A SEAT FOR VEHICLE REPAIRING AND METHOD THEREOF The present invention provides a seat for vehicle that features a tool tray with storage space, allowing the mechanic to keep essential tools and equipment within easy reach. This improves efficiency by reducing the need to constantly climb in and out from under the vehicle to fetch tools.

No. of Pages : 14 No. of Claims : 9

(12) PATENT APPLICATION PUBLICATION
(21) Application No.202421034552 A
(19) INDIA
(22) Date of filing of Application :01/05/2024
(43) Publication Date : 07/11/2025

(54) Title of the invention : INSTANT GUMMY PRE-MIX

(51) International classification	:A23L21/10, A23L29/20, A23L29/30, A23G3/34
(31) Priority Document No	:NA
(32) Priority Date	:NA
(33) Name of priority country	:NA
(86) International Application No	:NA
Filing Date	:NA
(87) International Publication No	: NA
(61) Patent of Addition to Application Number	:NA
Filing Date	:NA
(62) Divisional to Application Number	:NA
Filing Date	:NA

(71)**Name of Applicant :**
1)Swapnil Mandage.
Address of Applicant :Tirthabhumi Apt. Flat No. 3, 2nd Floor, at Mansi Circle, Vastrapur, Ahmedabad. -380015, India Ahmedabad Gujarat India
(72)**Name of Inventor :**
1)Swapnil Mandage.

(57) Abstract :
Instant Gummy Pre-Mix The present invention provides a composition of Mixture powder with active agents for making instant gummy candy and a method to prepare gummy candies in a simple and easy manner that are cost effective. The gummy pre-Mixture can be composed into different formulations either as nutritional supplement or to improve specific organ functioning or body functioning. The active agent in the gummy can be multivitamins or for bone strength as calcium with vitamin D or Biotin for goodness of hair, nail and skin, or protein Mixture, or vitamin C, for enhancing endurance, or for brain and nervous system development, or protein supplement, or supplement for men, or supplement for women, or for managing UTI, or for enhancing endurance, or for promoting sleep, or for sexual wellness, or for stress management, or for boosting immunity, or for providing lactose a digestive enzyme, or for providing supplement for pre-workout and post-workout and or other similar supplemental actives.

No. of Pages : 14 No. of Claims : 9

(12) PATENT APPLICATION PUBLICATION
(21) Application No.202421034577 A
(19) INDIA
(22) Date of filing of Application :01/05/2024
(43) Publication Date : 07/11/2025

(54) Title of the invention : SYSTEM AND METHOD FOR IDENTIFYING SERVING CELL BASED ON UNIQUE IDENTIFIERS IN COMMUNICATION NETWORKS

(51) International classification	:H04W0088080000, G06F0016250000, H04W0076110000, H04J0011000000, H04W0074080000	(71)**Name of Applicant :** **1)JIO PLATFORMS LIMITED** Address of Applicant :Office-101, Saffron, Nr. Centre Point, Panchwati 5 Rasta, Ambawadi, Ahmedabad - 380006, Gujarat, India Gujarat India
(31) Priority Document No	:NA	(72)**Name of Inventor :**
(32) Priority Date	:NA	**1)BHATNAGAR, Pradeep Kumar**
(33) Name of priority country	:NA	**2)BHATNAGAR, Aayush**
(86) International Application No	:NA	**3)AMBALIYA, Haresh**
Filing Date	:NA	**4)SHARMA, Asha**
(87) International Publication No	: NA	**5)GOYAL, Rahul**
(61) Patent of Addition to Application Number	:NA	**6)TRIPATHI, Anjali**
Filing Date	:NA	**7)BHAKHAR, Premprakash**
(62) Divisional to Application Number	:NA	
Filing Date	:NA	

(57) Abstract :
The present disclosure relates to a system (102) and a method (500) for identifying a serving cell from a unique identifier in a communication network (104). Initially, a value representing the unique identifier associated with the serving cell is captured. The captured value, which is in a first format, is then converted into a second format to generate a formatted number. Once converted, a bit length of the formatted number is checked against a predetermined bit length. If the bit length is determined to be shorter than the predetermined bit length, then additional bits are appended to the formatted number to ensure that the formatted number matches the predetermined bit length. After adjusting the bit length, specific bits from the formatted number are used to determine at least one network parameter, which is then used to identify the corresponding serving cell to which a User Equipment (UE) (106) is connected. Figure.5

No. of Pages : 56 No. of Claims : 15

(12) PATENT APPLICATION PUBLICATION
(21) Application No.202421034731 A
(19) INDIA
(22) Date of filing of Application :01/05/2024
(43) Publication Date : 07/11/2025

(54) Title of the invention : SYSTEM AND METHOD FOR MANAGING QUALITY OF SERVICE PARAMETERS IN A COMMUNICATION NETWORK

(51) International classification	:H04W0028240000, G06F0021570000, H04W0028020000, H04W0072120000, G06F0009380000	(71)**Name of Applicant :** **1)Jio Platforms Limited** Address of Applicant :Office - 101, Saffron, Nr. Centre Point, Panchwati 5 Rasta, Ambawadi, Ahmedabad 380006, Gujarat India Ahmedabad Gujarat India
(31) Priority Document No	:NA	(72)**Name of Inventor :** **1)Bhatnagar, Aayush**
(32) Priority Date	:NA	**2)Bhaskar Shetty, Mukta**
(33) Name of priority country	:NA	**3)Bhaskar, Alok**
(86) International Application No	:NA	**4)Singh, Sanjeev**
Filing Date	:NA	**5)Gupta, Aditya Kumar**
(87) International Publication No	: NA	**6)Khamesra, Apoorva**
(61) Patent of Addition to Application Number	:NA	
Filing Date	:NA	
(62) Divisional to Application Number	:NA	
Filing Date	:NA	

(57) Abstract :
The present disclosure relates to a system (100) and a method (400) for managing QoS parameters in a communication network (106). The method (400) includes receiving a request to update a QoS parameter in a QoS reference from a consumer NF (212), authenticating the request, generating a tagged QoS parameter the QoS reference stored in a database (218), and updating the QoS reference using the tagged QoS parameter. The method (400) further includes determining whether the consumer NF (212) and the data processing NF (206) have subscribed to access information from the database (218). Furthermore, the method (400) includes receiving a QoS reference update notification from the database (218) based on subscription and transmitting the QoS reference update notification to the consumer NF (212).
FIG. 4

No. of Pages : 54 No. of Claims : 16

(12) PATENT APPLICATION PUBLICATION
(21) Application No.202421034732 A
(19) INDIA
(22) Date of filing of Application :01/05/2024
(43) Publication Date : 07/11/2025

(54) Title of the invention : SYSTEM AND METHOD FOR SYNCHRONIZING DATA ACROSS MULITPLE DATABASES

(51) International classification	:G06F0016250000, G06F0016270000, G06F0016280000, G06F0016230000, G06F0016245800	(71)**Name of Applicant :** **1)Jio Platforms Limited** Address of Applicant :Office - 101, Saffron, Nr. Centre Point, Panchwati 5 Rasta, Ambawadi, Ahmedabad 380006, Gujarat India Ahmedabad Gujarat India
(31) Priority Document No	:NA	(72)**Name of Inventor :**
(32) Priority Date	:NA	**1)Bhatnagar, Pradeep Kumar**
(33) Name of priority country	:NA	**2)Bhatnagar, Aayush**
(86) International Application No	:NA	**3)Reddy Polsoni, Chaitanya**
Filing Date	:NA	**4)Bhate, Hardika**
(87) International Publication No	: NA	**5)Jadon, Harendra**
(61) Patent of Addition to Application Number	:NA	
Filing Date	:NA	
(62) Divisional to Application Number	:NA	
Filing Date	:NA	

(57) Abstract :
Disclosed herein is a method (400) for synchronizing data across a plurality of databases. The method includes establishing a connection between the plurality of databases which includes at least one source database and at least one target database by configuring a set of communication protocols. Upon establishing the connection between the plurality of databases, the method includes performing one or more data transformation operations on data in the at least one source database to align structure of the data with the at least one target database. Further, after performing the one or more data transformation operations, the method includes synchronizing the data between the at least one source database and at least one target database. FIG. 4

FIG. 4

No. of Pages : 39 No. of Claims : 14

(12) PATENT APPLICATION PUBLICATION
(21) Application No.202421034784 A
(19) INDIA
(22) Date of filing of Application :02/05/2024
(43) Publication Date : 07/11/2025

(54) Title of the invention : Method for quantifying avian nutrition extracted from Ficus benghalensis

(51) International classification	:A61K0036600000, A61Q0019080000, G16H0020600000, G06Q0030060000, A23L0002040000	(71)**Name of Applicant :** **1)Dr. Snehal Niraj Dapke** Address of Applicant :Plot No 22, Puranik Layout, Bharat Nagar, Amaravati Road, Nagpur, Maharashtra, India, 440033 Nagpur Maharashtra India (72)**Name of Inventor :** **1)Dr. Snehal Niraj Dapke**
(31) Priority Document No	:NA	
(32) Priority Date	:NA	
(33) Name of priority country	:NA	
(86) International Application No	:NA	
Filing Date	:NA	
(87) International Publication No	: NA	
(61) Patent of Addition to Application Number	:NA	
Filing Date	:NA	
(62) Divisional to Application Number	:NA	
Filing Date	:NA	

(57) Abstract :
Abstract: Method for quantifying avian nutrition extracted from Ficus benghalensis A method for quantifying avian nutrition extracted from Ficus benghalensis is the present invention. In particular the nutrients are extracted from the fruits of Ficus Benghalensis. The anticipated nutrients are confirmed by the chemical reaction tests and after it is being confirmed are further quantified with respect to content of the respective nutrients. The invention is achieving the object to provide the essential nutrients to the birds which can’t migrate or kept in zoo.

No. of Pages : 23 No. of Claims : 8

(12) PATENT APPLICATION PUBLICATION
(19) INDIA
(22) Date of filing of Application :02/05/2024
(21) Application No.202421034816 A
(43) Publication Date : 07/11/2025

(54) Title of the invention : METHOD AND SYSTEM FOR COMPLIANCE MANAGEMENT IN COMMUNICATION NETWORK

(51) International classification	:G06Q0010060000, G06Q0010100000, G06Q0030000000, G06F0016215000, G06F0016300000
(31) Priority Document No	:NA
(32) Priority Date	:NA
(33) Name of priority country	:NA
(86) International Application No	:NA
Filing Date	:NA
(87) International Publication No	: NA
(61) Patent of Addition to Application Number	:NA
Filing Date	:NA
(62) Divisional to Application Number	:NA
Filing Date	:NA

(71)**Name of Applicant :**
1)JIO PLATFORMS LIMITED
Address of Applicant :Office-101, Saffron, Nr. Centre Point, Panchwati 5 Rasta, Ambawadi, Ahmedabad - 380006, Gujarat, India Gujarat India
(72)**Name of Inventor :**
1)BHATNAGAR, Pradeep Kumar
2)BHATNAGAR, Aayush
3)AMBALIYA, Haresh
4)GUPTA, Anil
5)DERE, Makarand
6)Kumar, Kamal

(57) Abstract :
Compliance management in a communication network is disclosed. The compliance management enables a real-time processing of a regulatory data to enforce service restrictions based on geographic location and service type. The compliance management involves receiving the regulatory data, extracting the relevant regulatory data, classifying the service barring information, and creating a rule repository for enforcement and auditing. The compliance management enhances regulatory adherence, improves operational efficiency, and enables timely and transparent communication with users regarding a service availability. This helps businesses to reduce a legal risk, maintain a service integrity, and build a trust with customers and regulatory bodies. Figure.3

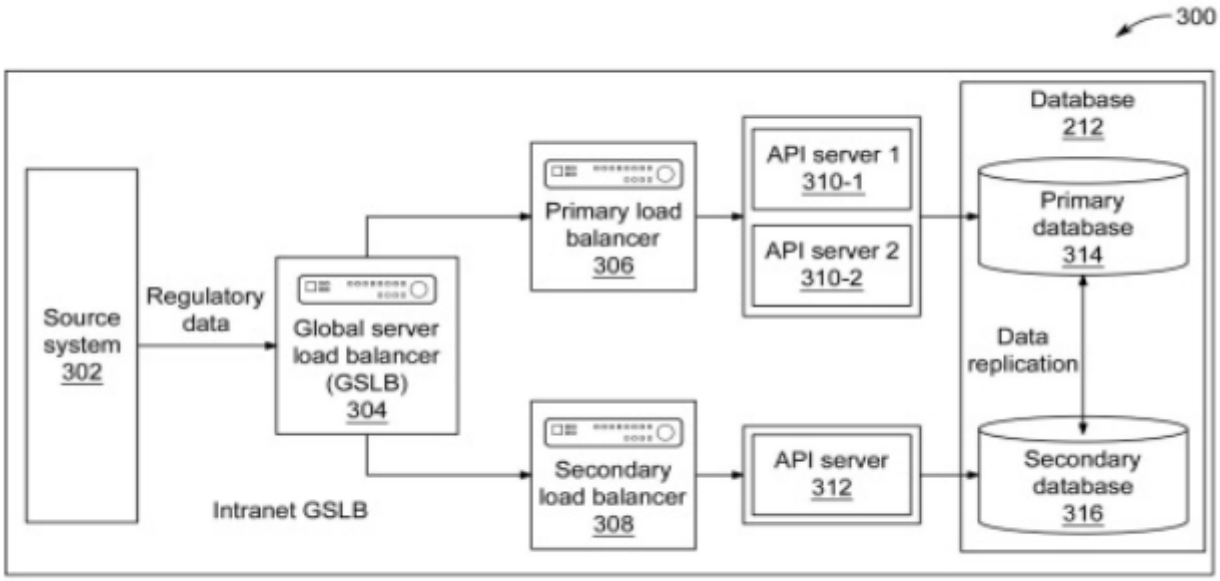

FIG. 3

No. of Pages : 59 No. of Claims : 15

(12) PATENT APPLICATION PUBLICATION
(21) Application No.202421034826 A
(19) INDIA
(22) Date of filing of Application :02/05/2024
(43) Publication Date : 07/11/2025

(54) Title of the invention : A REAR STRUCTURE OF A TWO-WHEELED VEHICLE AND A METHOD OF ASSEMBLY THEREOF

(51) International classification	:B62D0025080000, B62K0013000000, B62B0007140000, B62K0015000000, B62K0023060000	(71)**Name of Applicant :** **1)BAJAJ AUTO LIMITED** Address of Applicant :Bajaj Auto Limited, Mumbai-Pune Road, Akurdi, Pune-411035 Pune Maharashtra India (72)**Name of Inventor :** **1)Arunkumar Francis** **2)Gianandrea Fabbro** **3)Rahul P Adhikari** **4)Akshay Prakash**
(31) Priority Document No	:NA	
(32) Priority Date	:NA	
(33) Name of priority country	:NA	
(86) International Application No	:NA	
Filing Date	:NA	
(87) International Publication No	: NA	
(61) Patent of Addition to Application Number	:NA	
Filing Date	:NA	
(62) Divisional to Application Number	:NA	
Filing Date	:NA	

(57) Abstract :
The present invention provides a rear structure (200) of a two wheeled vehicle. The rear structure (200) comprises a vehicle's frame (100) having a head tube, a front frame portion extending rearwardly from the head tube, a rear frame portion (106) connected to the front frame portion, and a sub-frame assembly (202) comprising at least a rear handle (204). Further, the rear handle (204) is having a provision for mounting a plurality of sub-frame components. Moreover, the rear handle (204) is configured to be mounted on the rear frame portion (106) along with sub-frame components. Fig. 2

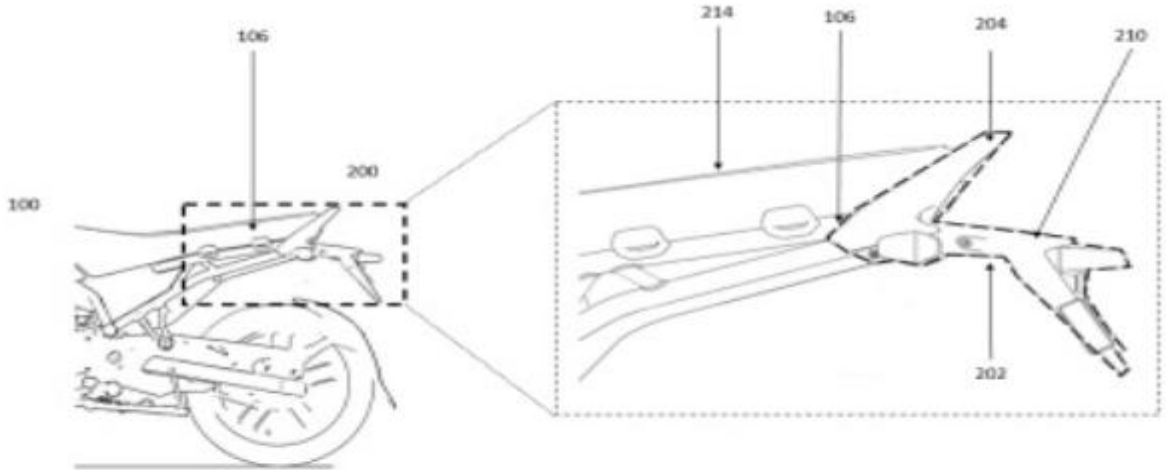

Figure 2

No. of Pages : 29 No. of Claims : 16

(12) PATENT APPLICATION PUBLICATION
(21) Application No.202421034842 A
(19) INDIA
(22) Date of filing of Application :02/05/2024
(43) Publication Date : 07/11/2025

(54) Title of the invention : METHOD AND SYSTEM FOR DEVELOPING MULTI-PLATFORM APPLICATIONS

(51) International classification	:G06F0008650000, G06F0008410000, G06F0008300000, G06F0008600000, G06F0009540000	(71)**Name of Applicant :** **1)JIO PLATFORMS LIMITED** Address of Applicant :Office-101, Saffron, Nr. Centre Point, Panchwati 5 Rasta, Ambawadi, Ahmedabad - 380006, Gujarat, India Gujarat India
(31) Priority Document No	:NA	(72)**Name of Inventor :** **1)BHATNAGAR, Pradeep Kumar**
(32) Priority Date	:NA	**2)BHATNAGAR, Aayush**
(33) Name of priority country	:NA	**3)AMBALIYA, Haresh**
(86) International Application No	:NA	**4)SINGH, Priyamvada**
Filing Date	:NA	**5)TRIPATHI, Anjali**
(87) International Publication No	: NA	**6)NEEMA, Anmol**
(61) Patent of Addition to Application Number	:NA	**7)CHUNDAWAT, Surya Narayan Singh**
Filing Date	:NA	**8)BHAKHAR, Premprakash**
(62) Divisional to Application Number	:NA	
Filing Date	:NA	

(57) Abstract :
An application development framework supporting the creation of an application for multiple platforms is identified. A unified codebase comprising a unified set of source code is created using the identified application development framework to build applications that can run on multiple platforms. The created unified codebase is transformed into a platform-supported codebase for each platform to address differences in user interface (UI) design, device features, or other platform-specific requirements. The application compiled with the transformed platform-supported codebase is deployed to distribution channels for each platform. The application's functionality is exposed through a standardized interface with which other applications or services interact. The authentication method is also implemented as a security measure. FIG.4

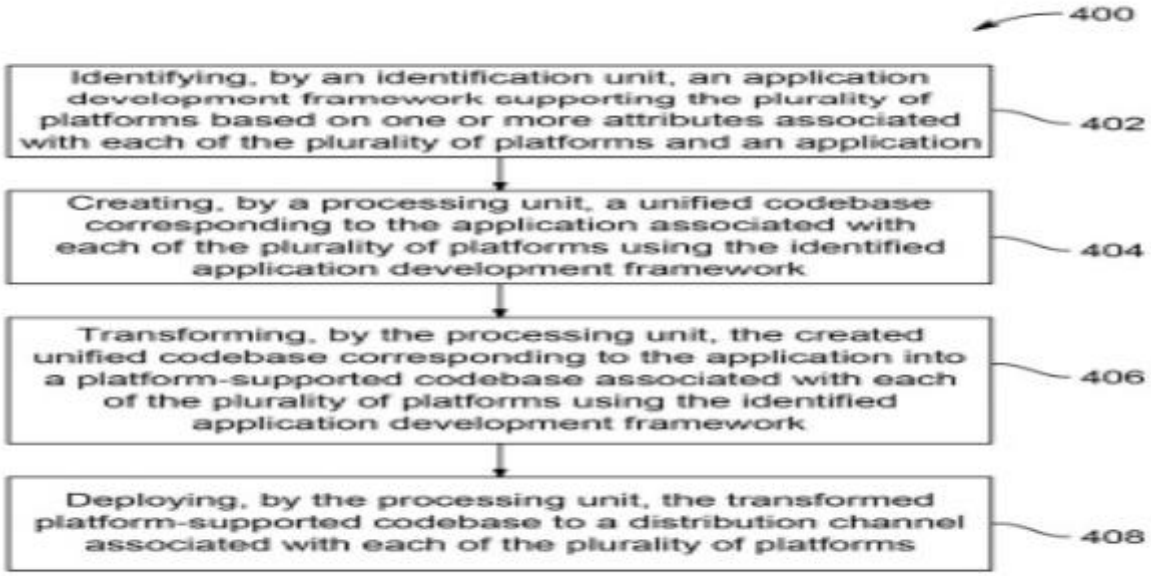

FIG. 4

No. of Pages : 56 No. of Claims : 11

(12) PATENT APPLICATION PUBLICATION
(21) Application No.202421034937 A
(19) INDIA
(22) Date of filing of Application :02/05/2024
(43) Publication Date : 07/11/2025

(54) Title of the invention : A WIRE HARNESS ROUTING STRUCTURE FOR AN ELECTRIC VEHICLE

(51) International classification	:B60R16/02, B60R16/033, B60R16/02, B60R16/033	(71)**Name of Applicant :** **1)TORK MOTORS PVT. LTD.** Address of Applicant :HQ, C9-10, MIDC Rd, T Block, MIDC Bhosari, Pune - 411026 Bhosari Maharashtra India
(31) Priority Document No	:NA	(72)**Name of Inventor :**
(32) Priority Date	:NA	**1)MAHATEKAR, Anup**
(33) Name of priority country	:NA	**2)CHAURASIA, Dhiraj**
(86) International Application No	:NA	**3)KHADE, Sushant**
Filing Date	:NA	
(87) International Publication No	: NA	
(61) Patent of Addition to Application Number	:NA	
Filing Date	:NA	
(62) Divisional to Application Number	:NA	
Filing Date	:NA	

(57) Abstract :
Disclosed herein a wire harness routing structure for electric vehicle, comprises of a plurality of wire insertion hooks (17) provided on rear side of a plurality of battery units (14) housed adjacent to each other within a battery mounting assembly (7) and a wire harness (1) comprising a main wire (5) extending substantially through the plurality of wire insertion hooks (17) along rear length and width of the battery assembly (7) for connecting an electronic control unit (ECU) (2) directly mounted on to the top of a battery mounting assembly (7) with said plurality of battery units (14), a battery junction box (10) integrated with the battery mounting assembly (7) on its rear side and various equipment of the vehicle. The wire harness routing structure is for three-wheeler or cars or trucks or buses and provides easy serviceability and maintenance.

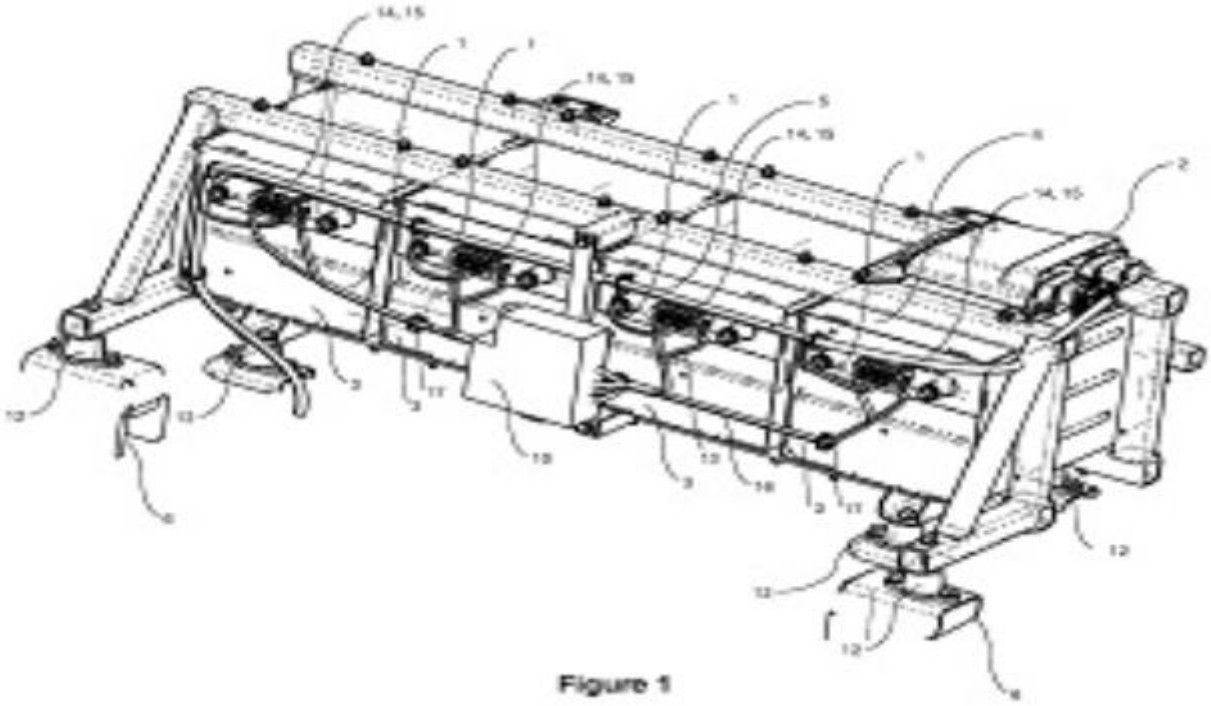

Figure 1

No. of Pages : 11 No. of Claims : 6

(12) PATENT APPLICATION PUBLICATION
(19) INDIA
(22) Date of filing of Application :02/05/2024
(21) Application No.202421034980 A
(43) Publication Date : 07/11/2025

(54) Title of the invention : A MULTIFACETED 'T-SHAPED' GASKET

(51) International classification	:F16B0005020000, B65D0039080000, F16L0023160000, G01M0003040000, G02B0005090000	(71)**Name of Applicant :** **1)HARESH K. SIPPY** Address of Applicant :BUNGLOW NO. 10, ATUR PARK, S T ROAD, NEAR DIAMOND GARDEN, CHEMBUR EAST, MUMBAI – 400071, MAHARASHTRA, INDIA MUMBAI Maharashtra India
(31) Priority Document No	:NA	(72)**Name of Inventor :** **1)HARESH K. SIPPY**
(32) Priority Date	:NA	
(33) Name of priority country	:NA	
(86) International Application No	:NA	
Filing Date	:NA	
(87) International Publication No	: NA	
(61) Patent of Addition to Application Number	:NA	
Filing Date	:NA	
(62) Divisional to Application Number	:NA	
Filing Date	:NA	

(57) Abstract :
ABSTRACT A MULTIFACETED 'T-SHAPED' GASKET A multifaceted gasket assembly for sealing a joint between a tubesheet (200) and a shell (300) in a heat exchanger (1000), comprising: a T-shaped gasket (100) including: a radially extending horizontal portion (111) to be seated, radially, between tubesheet (200) and shell (300); an axially extending vertical portion (112) integrally formed with the horizontal portion (111) and abutting the tubesheet (200); T-shaped gasket (100) provides dual-stage sealing mechanism: i) a first stage seal (S1) wherein fluid pressure on the shell side (301) acts upon the horizontal portions and vertical portions, of the T-shaped gasket (100), thereby enhancing gasket contact pressure through self-energization, and a second stage seal (S2) wherein mechanical clamping force is applied via an internal flange (400) through an internal cylinder (500), compressing an outer portion of the vertical portion (112), of the T-shaped gasket (100), against the tubesheet (200) and the shell (300), ensuring a leak-tight joint. [[FIGURE 5]]

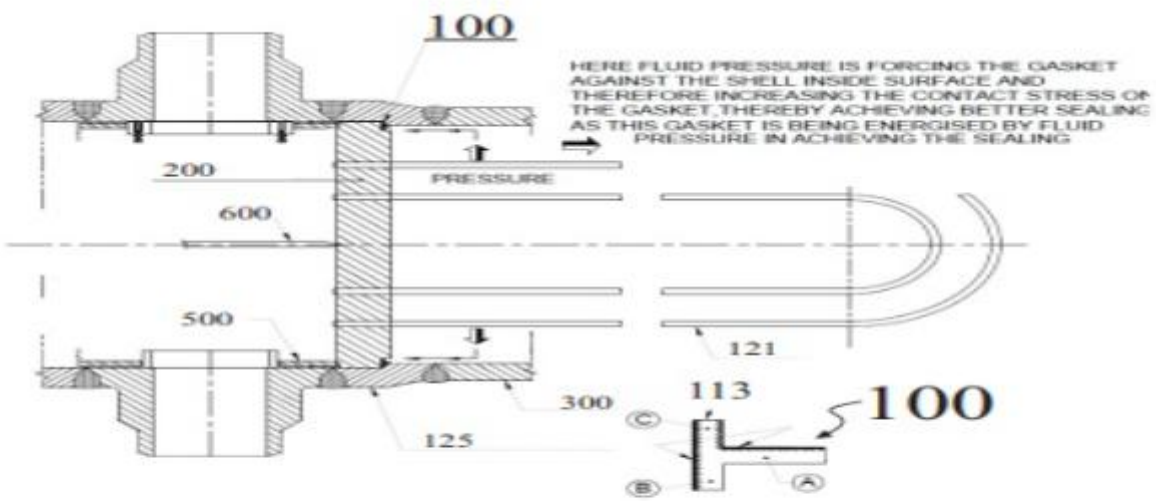

FIGURE 5

No. of Pages : 29 No. of Claims : 8

(12) PATENT APPLICATION PUBLICATION

(21) Application No.202421035003 A

(19) INDIA

(22) Date of filing of Application :02/05/2024

(43) Publication Date : 07/11/2025

(54) Title of the invention : THERMAL OPTIMIZATION AND CONTROL IN OPEN-PLAN SPACES USING PHYSICS-INFORMED GRAPH NEURAL NETWORK BASED OPTIMAL CONTROLLER

(51) International classification	:G06N0003040000, F24F0011300000, F24F0011620000, G06N0003080000, B60H0001000000	(71)**Name of Applicant :** **1)Tata Consultancy Services Limited** Address of Applicant :Nirmal Building, 9th Floor, Nariman Point, Mumbai 400021, Maharashtra, India Mumbai Maharashtra India
(31) Priority Document No	:NA	(72)**Name of Inventor :** **1)NAGARATHINAM, Srinarayana** **2)VASAN, Arunchandar**
(32) Priority Date	:NA	
(33) Name of priority country	:NA	
(86) International Application No	:NA	
Filing Date	:NA	
(87) International Publication No	: NA	
(61) Patent of Addition to Application Number	:NA	
Filing Date	:NA	
(62) Divisional to Application Number	:NA	
Filing Date	:NA	

(57) Abstract :

Optimal control of multiple heating, ventilation, and air-conditioning units in an open-plan space demands fast and accurate thermodynamic modeling. Prior methods lack scalability required for effective control in large open-plan offices primarily due to air-mixing interactions. The present disclosure describes a physics-informed graph neural network (PI-GNN) to overcome these challenges. Specifically, thermodynamic interactions are modeled as edges between nodes that represent cells. Further, a modeling approach is used that allows explicit modeling of wall and window surface temperatures which are commonly ignored. The method of present disclosure utilizes PI-GNN as a state-estimator that employs a receding-horizon approach for optimal HVAC control. PI-GNNs are adapted for building HVAC control by incorporating a time-resetting strategy to handle time-dependent ambient conditions and therefore set-points. The method of the present disclosure outperforms a regular PINN model and other baseline control strategies on thermal model accuracy, computation time, energy consumption, and user comfort.

FIG. 2A

No. of Pages : 63 No. of Claims : 10

(12) PATENT APPLICATION PUBLICATION
(19) INDIA
(22) Date of filing of Application :01/05/2024
(21) Application No.202421034578 A
(43) Publication Date : 07/11/2025

(54) Title of the invention : SYSTEM AND METHOD FOR VISUALIZING SERVICE AVAILABILITY BASED ON PERFORMANCE OF A NETWORK

(51) International classification	:H04W0024100000, H04W0028240000, H04W0028020000, H04L0041142000, H04M0015000000
(31) Priority Document No	:NA
(32) Priority Date	:NA
(33) Name of priority country	:NA
(86) International Application No	:NA
Filing Date	:NA
(87) International Publication No	: NA
(61) Patent of Addition to Application Number	:NA
Filing Date	:NA
(62) Divisional to Application Number	:NA
Filing Date	:NA

(71)**Name of Applicant :**
1)JIO PLATFORMS LIMITED
Address of Applicant :Office-101, Saffron, Nr. Centre Point, Panchwati 5 Rasta, Ambawadi, Ahmedabad - 380006, Gujarat, India Gujarat India
(72)**Name of Inventor :**
1)BHATNAGAR, Pradeep Kumar
2)BHATNAGAR, Aayush
3)SHETTY, Manoj
4)CHITALIYA, Dharmesh
5)KADAM, Hanumant
6)VIRKAR, Sneha
7)KRISHNA, Neelabh

(57) Abstract :
The present disclosure relates to a system (108) and a method (400) for visualizing service availability based on a performance of a network (106). The method (400) comprises of receiving network performance data from a plurality of network nodes by a receiving unit (202). The method (400) further includes segmenting a geographical area by a grid generation module (210) into multiple grid cells, each corresponding to a defined location. An aggregation module aggregates the network performance data for each grid cell (212). A mapping module (214) creates a mapping table that links services with required network performance thresholds. A determining module (216) evaluates whether the aggregated data in each grid meets the service-specific thresholds and assigns service availability indicators. A visualization module (218) then generates a visual representation of a service layer on a map based on the assigned indicators. Fig. 2B

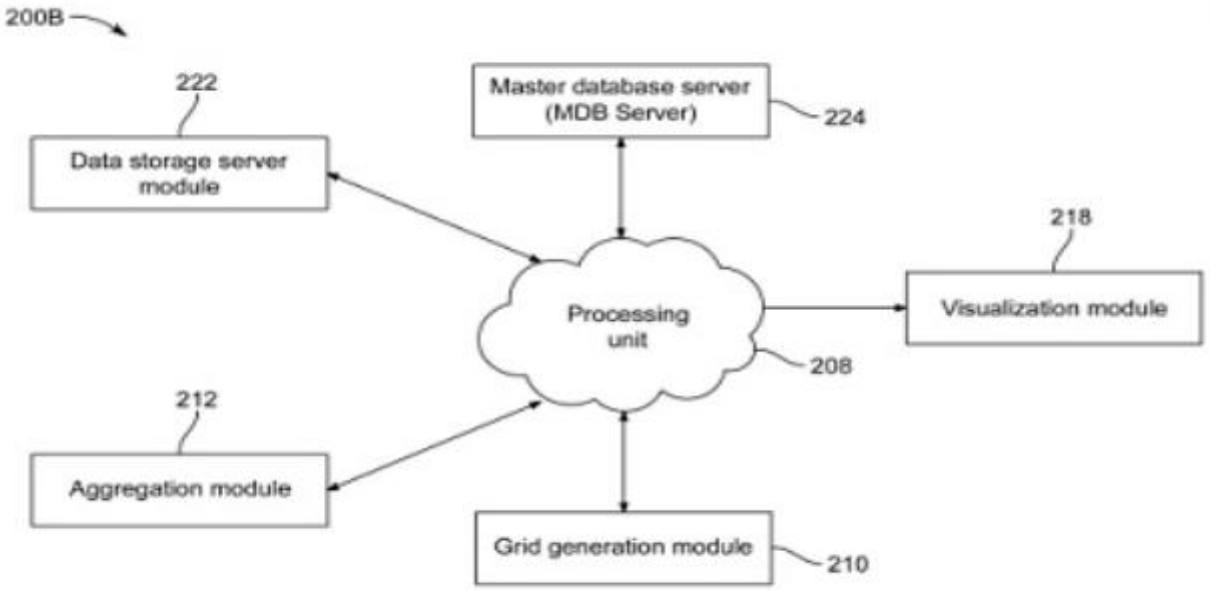

FIG. 2B

No. of Pages : 52 No. of Claims : 14

(12) PATENT APPLICATION PUBLICATION
(21) Application No.202421034596 A
(19) INDIA
(22) Date of filing of Application :01/05/2024
(43) Publication Date : 07/11/2025

(54) Title of the invention : TENOFOVIR ALAFENAMIDE COMPOSITIONS

(51) International classification	: A61K9/20, A61K31/675
(31) Priority Document No	:NA
(32) Priority Date	:NA
(33) Name of priority country	:NA
(86) International Application No	:NA
Filing Date	:NA
(87) International Publication No	: NA
(61) Patent of Addition to Application Number	:NA
Filing Date	:NA
(62) Divisional to Application Number	:NA
Filing Date	:NA

(71)**Name of Applicant :**
1)LUPIN LIMITED
Address of Applicant :Kalpataru Inspire, 3rd Floor, Off Western Express Highway, Santacruz (East), Mumbai – 400 055, Maharashtra, India Mumbai Maharashtra India
(72)**Name of Inventor :**
1)MAHAJAN, Pratik Shivram
2)KHURANA, Rajiv Kumar
3)CHANDRAN, Sajeev
4)AVACHAT, Makarand Krishnakumar

(57) Abstract :
ABSTRACT TENOFOVIR ALAFENAMIDE COMPOSITIONS The present invention provides oral pharmaceutical compositions of tenofovir alafenamide succinate, polymorph, cocrystal thereof, alone or in combination with one or more anti-viral drug and one or more pharmaceutically acceptable excipients. The present invention provides oral pharmaceutical compositions of tenofovir alafenamide succinate in combination with one or more anti-viral drug and one or more pharmaceutically acceptable excipients.

No. of Pages : 35 No. of Claims : 17

(12) PATENT APPLICATION PUBLICATION
(21) Application No.202421034601 A
(19) INDIA
(22) Date of filing of Application :01/05/2024
(43) Publication Date : 07/11/2025

(54) Title of the invention : ENVIRONMENTALLY-FRIENDLY ELECTRIC CABLE

(51) International classification	:H01B 3/44, H02G 11/00, H02G 1/06, C08L 29/04	(71)**Name of Applicant :** **1)KEC INTERNATIONAL LIMITED** Address of Applicant :30, SPENCER BUILDING, FORJETT STREET, NEAR BHATIA HOSPITAL, GRANT ROAD WEST, Maharashtra, Maharashtra India (72)**Name of Inventor :** **1)Anjan Banerjee** **2)Sachin Nalawade** **3)Pranoy Mondal** **4)Kaibalya Khuntia** **5)Prince Jain**
(31) Priority Document No	:NA	
(32) Priority Date	:NA	
(33) Name of priority country	:NA	
(86) International Application No	:NA	
Filing Date	:NA	
(87) International Publication No	: NA	
(61) Patent of Addition to Application Number	:NA	
Filing Date	:NA	
(62) Divisional to Application Number	:NA	
Filing Date	:NA	

(57) Abstract :
ABSTRACT ENVIRONMENTALLY-FRIENDLY ELECTRIC CABLE 5 Embodiments herein provide an environmentally-friendly electric cable (1) including a conductor layer (2), an insulation layer (3) surrounded over the conductor layer (2), a protective layer (4) surrounded over the insulation layer (3), an inner sheath layer (5) surrounded over the insulation layer (3), an armor layer (6) surrounded over the inner sheath layer (5), and an outer sheath layer (7) 10 surrounded over the inner sheath layer (5). The insulation layer (3) is made of an environment-friendly Polyvinyl chloride (PVC) insulation material. The inner sheath layer (5) is made of an environment-friendly PVC sheathing material. The outer sheath layer (7) is made of the environment-friendly PVC sheathing material, and wherein the environment-friendly PVC sheathing material is a RoHS and 15 REACH complaint. FIG. 1

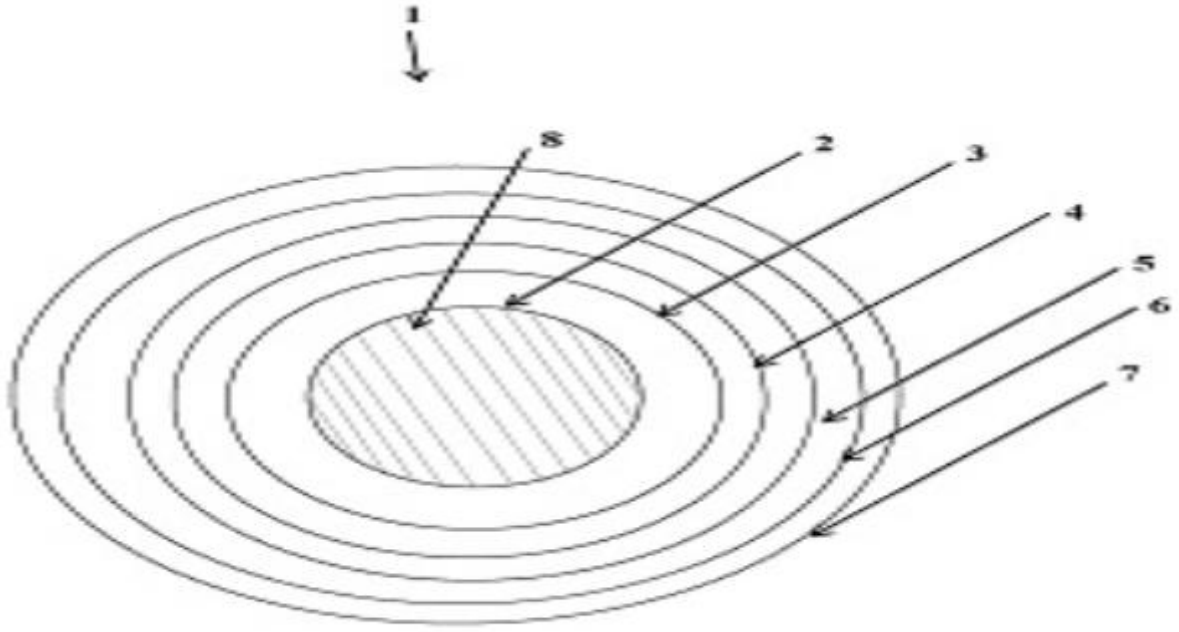

FIG. 1

No. of Pages : 34 No. of Claims : 11

(12) PATENT APPLICATION PUBLICATION
(21) Application No.202421034646 A
(19) INDIA
(22) Date of filing of Application :01/05/2024
(43) Publication Date : 07/11/2025

(54) Title of the invention : A PHARMACEUTICAL COMPOSITION IN POWDER FORM, PHARMACEUTICAL PREPARATION CONTAINING IT, AND PROCESS FOR PREPARATION THEREOF

(51) International classification	:A61K9/20, A61K9/28, A61K31/4439, A61K9/48, A61K9/20, A61K9/28, A61K31/4439, A61K9/48	(71)**Name of Applicant :** **1)Syri Research Private Limited** Address of Applicant :House No.: Survey No.384 - BP Estate, Opp. Sitaram Super Market Street National Highway No. 8, Chhani, City: Vadodara, State: Gujarat, Country: India, Pin code: 391740. Vadodara Gujarat India (72)**Name of Inventor :** **1)Achliya Girish Shantilal** **2)Mundada Piyush Kishor** **3)Poptani Sanjaykumar D** **4)Bhavsar Shreyaskumar V**
(31) Priority Document No	:NA	
(32) Priority Date	:NA	
(33) Name of priority country	:NA	
(86) International Application No	:NA	
Filing Date	:NA	
(87) International Publication No	: NA	
(61) Patent of Addition to Application Number	:NA	
Filing Date	:NA	
(62) Divisional to Application Number	:NA	
Filing Date	:NA	

(57) Abstract :
A PHARMACEUTICAL COMPOSITION IN POWDER FORM, PHARMACEUTICAL PREPARATION CONTAINING IT, AND PROCESS FOR PREPARATION THEREOF The present invention relates to a pharmaceutical composition in powder form, which is obtained by mixing two powder mixes together to obtain the pharmaceutical composition in powder form, wherein the first powder mix comprises a therapeutically effective amount of lansoprazole or a free base, free acids, salt, hydrate, ester, amide, enantiomer, isomer, tautomer, or polymorph thereof; at least one soothing agent; and at least one first buffering agent, and wherein the second powder mix comprises at least one suspending agent; and at least one excipient. The present invention also relates to a process for preparing the pharmaceutical composition in powder form. The present invention further relates to a pharmaceutical suspension, comprising a pharmaceutically effective amount of the pharmaceutical composition in powder form as defined above; and water.

No. of Pages : 31 No. of Claims : 12

(12) PATENT APPLICATION PUBLICATION
(21) Application No.202421034679 A
(19) INDIA
(22) Date of filing of Application :01/05/2024
(43) Publication Date : 07/11/2025

(54) Title of the invention : METHOD AND SYSTEM FOR DECENTRALIZED SAFE NAVIGATION IN MULTI-ROBOTIC AGENT SYSTEMS

(51) International classification	:C08F0222100000, G05D0001020000, H04L0067107400, G06F0009500000, G06F0040000000	(71)**Name of Applicant :** **1)Tata Consultancy Services Limited** Address of Applicant :Nirmal Building, 9th Floor, Nariman Point, Mumbai 400021, Maharashtra, India Mumbai Maharashtra India
(31) Priority Document No	:NA	(72)**Name of Inventor :** **1)BARANWAL, Mayank**
(32) Priority Date	:NA	**2)SUKUMAR, Srikant**
(33) Name of priority country	:NA	
(86) International Application No	:NA	
Filing Date	:NA	
(87) International Publication No	: NA	
(61) Patent of Addition to Application Number	:NA	
Filing Date	:NA	
(62) Divisional to Application Number	:NA	
Filing Date	:NA	

(57) Abstract :
The embodiment of present disclosure herein addresses unresolved problem of safe and collision free navigation among multiple mobile robotic agents using a decentralized control within a dynamic environment unlike the prior arts which uses a combination of Control Lyapunov Functions or Control Barrier Functions for a single robotic agent navigation. The embodiment of the present disclosure simultaneously prioritizes achieving controllability i.e., convergence to a set of goal position and safety, ensuring collision avoidance with both static and dynamic obstacles among multiple mobile robotic agents by incorporating Sequential Convex programming. The embodiment of the present disclosure results in a computationally efficient Control Lyapunov Functions- Sequential Convex programming (CLF-SCP) based Quadratic Programming (QP) solution, which holds the potential to scale seamlessly to accommodate an arbitrary number of agents.

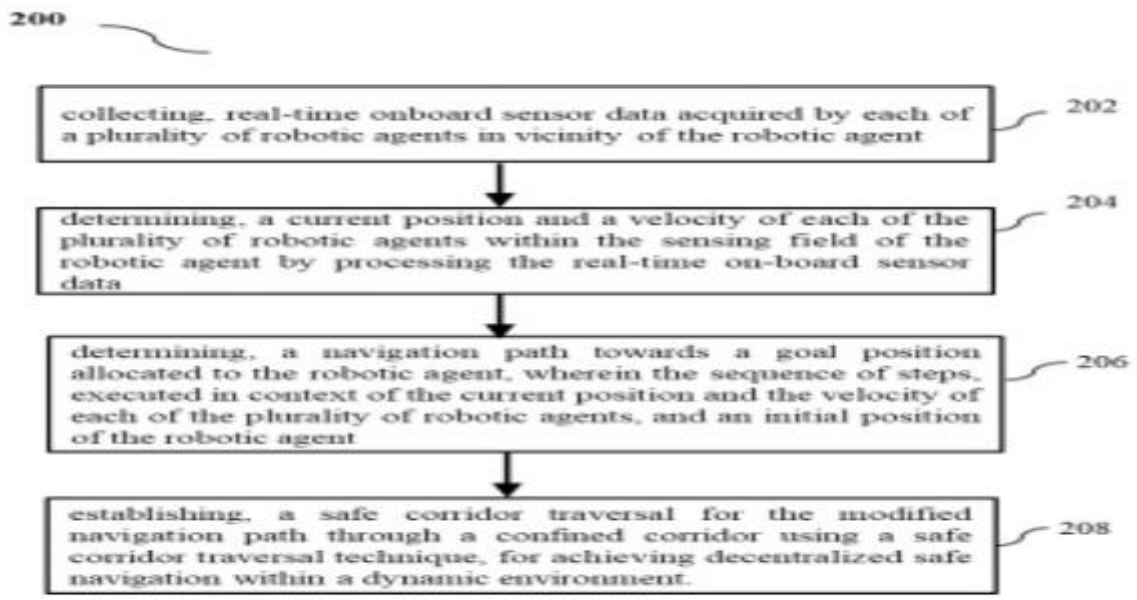

FIG. 2A

No. of Pages : 39 No. of Claims : 8

(12) PATENT APPLICATION PUBLICATION
(21) Application No.202421034693 A
(19) INDIA
(22) Date of filing of Application :01/05/2024
(43) Publication Date : 07/11/2025

(54) Title of the invention : BATTERY FOR PRODUCTION OF HYDROGEN AND OXYGEN AND IN-SITU SEPARATION OF BOTH

(51) International classification	:C25B0001040000, C25B0009730000, H01M0008065600, F02B0043100000, C25B0015020000
(31) Priority Document No	:NA
(32) Priority Date	:NA
(33) Name of priority country	:NA
(86) International Application No	:NA
Filing Date	:NA
(87) International Publication No	: NA
(61) Patent of Addition to Application Number	:NA
Filing Date	:NA
(62) Divisional to Application Number	:NA
Filing Date	:NA

(71)**Name of Applicant :**
1)Indian Oil Corporation Limited
Address of Applicant :IndianOil Bhavan, G-9, Ali Yavar Jung Marg, Bandra (East), Mumbai-400 051, Maharashtra, India Mumbai Maharashtra India
(72)**Name of Inventor :**
1)SAMALA, Bhanumurthy
2)BANSAL, Abhishek
3)MOHANASUNDARAM, Palvannan
4)SESHUBABU, Narayanam
5)BADHE, Rajesh M
6)SRIVASTAVA, Umish

(57) Abstract :
The present invention relates to a lead-acid battery for producing high purity hydrogen and oxygen gases through water splitting reactions. The lead-acid battery of the present invention produces high purity ~99.9 vol% hydrogen and ~99.9 vol% oxygen. The invention provides an economic alternative to electrolyzer based green hydrogen production.

No. of Pages : 30 No. of Claims : 16

(12) PATENT APPLICATION PUBLICATION
(21) Application No.202421034728 A
(19) INDIA
(22) Date of filing of Application :01/05/2024
(43) Publication Date : 07/11/2025

(54) Title of the invention : SYSTEM AND METHOD FOR IDENTIFYING DOMINANCE AREA IN A WIRELESS COMMUNICATION NETWORK

(51) International classification	:H04W0024100000, H04W0072040000, H04W0024020000, H04W0064000000, G05D0001020000	(71)**Name of Applicant :** **1)Jio Platforms Limited** Address of Applicant :Office - 101, Saffron, Nr. Centre Point, Panchwati 5 Rasta, Ambawadi, Ahmedabad 380006, Gujarat India Ahmedabad Gujarat India
(31) Priority Document No	:NA	(72)**Name of Inventor :**
(32) Priority Date	:NA	**1)Bhatnagar, Pradeep Kumar**
(33) Name of priority country	:NA	**2)Bhatnagar, Aayush**
(86) International Application No	:NA	**3)Shetty, Manoj**
Filing Date	:NA	**4)Chitaliya, Dharmesh**
(87) International Publication No	: NA	**5)Hanumant, Kadam**
(61) Patent of Addition to Application Number	:NA	**6)Virkar, Sneha**
Filing Date	:NA	**7)Krishna, Neelabh**
(62) Divisional to Application Number	:NA	
Filing Date	:NA	

(57) Abstract :
Disclosed is a method (500) for identifying dominance area in a wireless communication network (100). The method includes partitioning a coverage map of a coverage region associated with a plurality of cells (102) into a plurality of grids. The method further includes determining a number of User Equipment (UEs) served by each cell in each grid based on mapping of trace data associated with a plurality of UEs (104) on the plurality of grids. Further, the method includes calculating a dominance percentage of each cell in each grid of the plurality of grids based on the number of the UEs served by each cell of the plurality of cells in each grid of the plurality of grids. Furthermore, the method includes identifying the dominance area in the coverage region based on the dominance percentage of each cell of the plurality of cells in each grid of the plurality of grids. FIG. 5

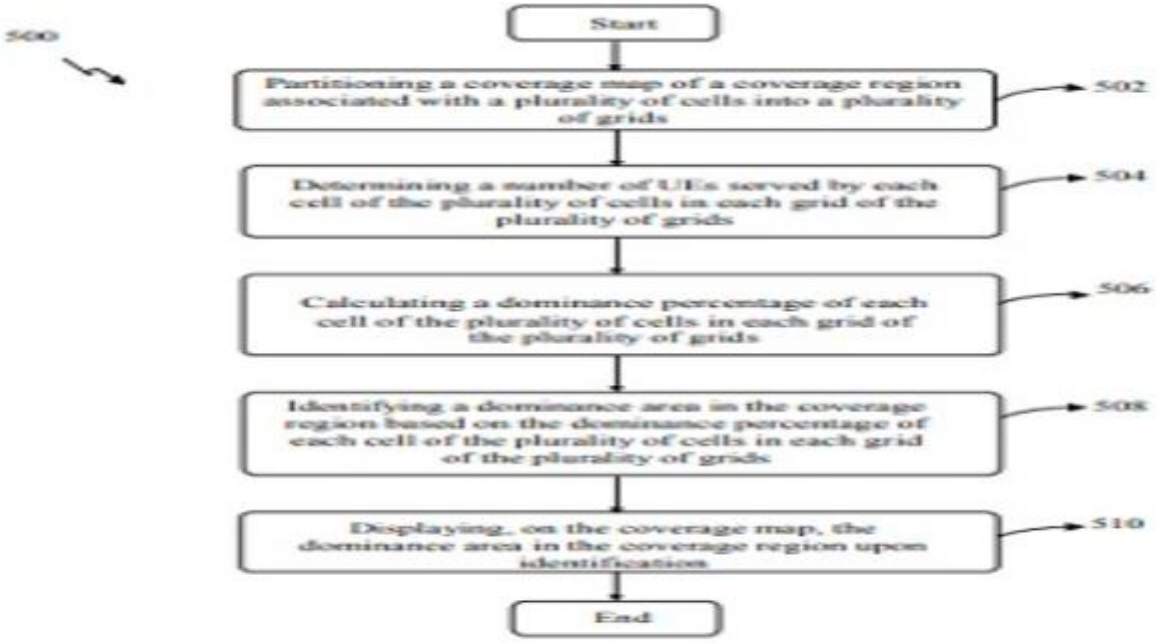

FIG. 5

No. of Pages : 44 No. of Claims : 10

(12) PATENT APPLICATION PUBLICATION
(21) Application No.202421034729 A
(19) INDIA
(22) Date of filing of Application :01/05/2024
(43) Publication Date : 07/11/2025

(54) Title of the invention : SYSTEM AND METHOD FOR IDENTIFYING LOCATIONS OF A USER ASSOCIATED WITH A USER EQUIPMENT

(51) International classification	:G06Q0050300000, G06F0016280000, H04L0067306000, G06F0016350000, G06Q0010060000
(31) Priority Document No	:NA
(32) Priority Date	:NA
(33) Name of priority country	:NA
(86) International Application No	:NA
Filing Date	:NA
(87) International Publication No	: NA
(61) Patent of Addition to Application Number	:NA
Filing Date	:NA
(62) Divisional to Application Number	:NA
Filing Date	:NA

(71)**Name of Applicant :**
1)Jio Platforms Limited
Address of Applicant :Office - 101, Saffron, Nr. Centre Point, Panchwati 5 Rasta, Ambawadi, Ahmedabad 380006, Gujarat India Ahmedabad Gujarat India
(72)**Name of Inventor :**
1)Bhatnagar, Pradeep Kumar
2)Bhatnagar, Aayush
3)Shetty, Manoj
4)Chitaliya, Dharmesh
5)Kadam, Hanumant
6)Virkar, Sneha
7)Krishna, Neelabh

(57) Abstract :
Disclosed is method (600) for identifying one or more locations of a user associated with a User Equipment (UE). The method includes identifying location clusters for the UE based on location information of UE included in trace data. Further, the method includes calculating, for each location cluster based on the trace data, an average session end time of sessions within a corresponding location cluster to classify the location clusters in one of work location clusters or home location clusters. Furthermore, the method includes determining an amount of the network usage by the UE at each location cluster and identifying at least one of a first cluster among the work location clusters as the work location of the user and a second cluster among the home location clusters as the home location of the user based on the determined amount of the network usage by the UE at the location clusters. FIG. 6

No. of Pages : 47 No. of Claims : 12

(12) PATENT APPLICATION PUBLICATION
(19) INDIA
(22) Date of filing of Application :02/05/2024
(21) Application No.202421035042 A
(43) Publication Date : 07/11/2025

(54) Title of the invention : COMPREHENSIVE METHODOLOGY FOR WASTE MANAGEMENT OPTIMIZATION

(51) International classification	:B65F0001140000, B65F0001000000, G06Q0050260000, G06Q0010060000, B65F0003000000	(71)**Name of Applicant :** **1)SOLANKI, Gulab Singh** Address of Applicant :House No. 869, Near Kargil Chowk, Sundar Nagar, Raipur - 492013, Chhattisgarh, India. Raipur Chattisgarh India
(31) Priority Document No	:NA	(72)**Name of Inventor :** **1)SOLANKI, Gulab Singh**
(32) Priority Date	:NA	
(33) Name of priority country	:NA	
(86) International Application No	:NA	
Filing Date	:NA	
(87) International Publication No	: NA	
(61) Patent of Addition to Application Number	:NA	
Filing Date	:NA	
(62) Divisional to Application Number	:NA	
Filing Date	:NA	

(57) Abstract :
The present disclosure pertains to the field of waste management and sanitation technologies, specifically focusing on methods (100) for efficient collection, processing, and disposal of various types of garbage, with an emphasis on optimizing space utilization, reducing transportation costs, and mitigating environmental impacts. The waste collection vehicle described herein is equipped with technology to crush wet-dry garbage using its engine or additional extra engine. Upon collection, wet garbage is processed into a paste, allowing for immediate separation of juice from the organic matter. The resulting powder residue effectively mitigates foul odors in the waste. The organic powder can be directed to recycling or composting facilities. Additionally, grinding all garbage reduces volume by 40% to 50%, optimizing space within the vehicle and reducing transport costs. Crushed waste is easily stored, offering flexibility in disposal methods (100). This integrated approach enhances waste management efficiency, minimizes environmental impact, and offers cost-saving benefits.

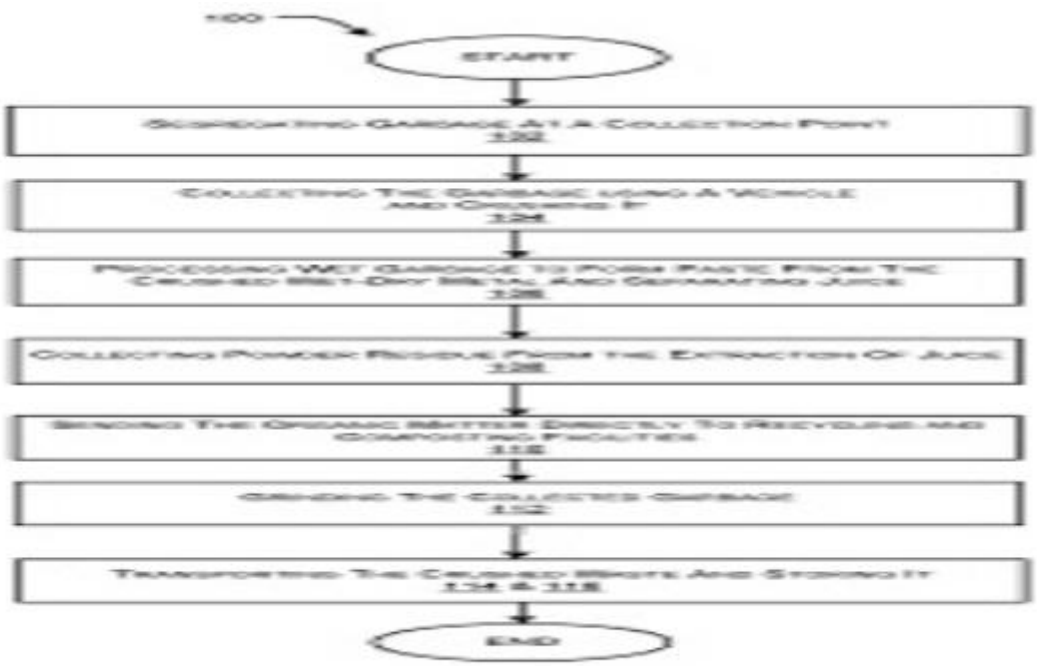

FIG. 1

No. of Pages : 19 No. of Claims : 10

(12) PATENT APPLICATION PUBLICATION
(21) Application No.202421035062 A
(19) INDIA
(22) Date of filing of Application :03/05/2024
(43) Publication Date : 07/11/2025

(54) Title of the invention : A TERNARY HERBICIDAL COMPOSITION AND FORMULATION THEREOF

(51) International classification	: A01N57/20, A01N37/38, A01N43/40, A01N43/50, A01N43/54, A01P13/00	(71)**Name of Applicant :** **1)RAJDHANI PETROCHEMICALS PRIVATE LIMITED** Address of Applicant :6, Lalita Complex, Rasala road, Navrangpura, Ahmedabad-380009, Gujarat, India Ahmedabad Gujarat India (72)**Name of Inventor :** **1)PATEL DIPAKKUMAR** **2)SHAH KENAL V.** **3)SHAH BHAVESH V.**
(31) Priority Document No	:NA	
(32) Priority Date	:NA	
(33) Name of priority country	:NA	
(86) International Application No	:NA	
Filing Date	:NA	
(87) International Publication No	: NA	
(61) Patent of Addition to Application Number	:NA	
Filing Date	:NA	
(62) Divisional to Application Number	:NA	
Filing Date	:NA	

(57) Abstract :
TITLE: A TERNARY HERBICIDAL COMPOSITION AND FORMULATION THEREOF ABSTRACT: The present invention relates to a Ternary herbicidal composition comprising of (A) Glufosinate, salts, esters and derivative or L-glufosinate, salts, esters and derivative; (B) at least one herbicide selected from class of sulfonylureas; (C) at least one more herbicide or combination thereof. The present invention further relates to process for preparing the said compositions in specific amount. The present invention further relates to the process for preparing the said composition along with inactive excipient; and formulations thereof.

No. of Pages : 40 No. of Claims : 17

(12) PATENT APPLICATION PUBLICATION
(19) INDIA
(22) Date of filing of Application :03/05/2024
(21) Application No.202421035202 A
(43) Publication Date : 07/11/2025

(54) Title of the invention : AUTOMATIC AQUA CONTROLLER

(51) International classification	:G05D0009120000, A47L0011400000, B65D0090040000, A47L0015000000, G01F0023240000
(31) Priority Document No	:NA
(32) Priority Date	:NA
(33) Name of priority country	:NA
(86) International Application No	:NA
Filing Date	:NA
(87) International Publication No	: NA
(61) Patent of Addition to Application Number	:NA
Filing Date	:NA
(62) Divisional to Application Number	:NA
Filing Date	:NA

(71)**Name of Applicant :**
1)Mayur Vishnuji Bansod
Address of Applicant :at Lonara post Uparwahi th Kalmeshwar dist Nagpur kalmeshwar Maharashtra India
2)Prajwal Siddhart Meshram
3)Parekh Vinod Nagdeote
4)Aditya Ravindra Somkuwar
5)Harshal Ganesh Rangare
6)Rameshwari Arun Patil
(72)**Name of Inventor :**
1)Mayur Vishnuji Bansod
2)Prajwal Siddhart Meshram
3)Parekh Vinod Nagdeote
4)Aditya Ravindra Somkuwar
5)Harshal Ganesh Rangare
6)Rameshwari Arun Patil

(57) Abstract :
Internet is now applied in almost all communication. Today, objects also can communicate with each other, that communication between the objects is knows as Internet Of Things. Things can be anything that we use every day. Now in over project the thing is water container i.e. water tank. Almost in everyone's house the water is stored in the water tank, but the method that we are using for the water tank filling and monitoring is very traditional and careless. Due to the older method plenty of water wasted down, also there is wastage of time if monitor the water tank to fill out, also the pump which are filling the water tank is not having any systematic method to control. In this project we successfully overcome the problem of water wastage due to the overflow of water container. We also improve time efficiency i.e. large amount of time is being wasted for monitoring the water tank. Our project provides an efficient, efficient and systematic method of water level monitoring by automation in the process of water level monitoring. Keywords—water level, Automatic, IOT, Internet, applications, monitoring

No. of Pages : 13 No. of Claims : 2

(12) PATENT APPLICATION PUBLICATION
(21) Application No.202421035246 A
(19) INDIA
(22) Date of filing of Application :03/05/2024
(43) Publication Date : 07/11/2025

(54) Title of the invention : AN ADVANCED REINFORCED SCAFFOLDING SYSTEM WITH COMPOSITE RESIN AND DEODAR WOOD CORE

(51) International classification	:B32B0027320000, B32B0007120000, C08G0018100000, B32B0027080000, E04G0007300000
(31) Priority Document No	:NA
(32) Priority Date	:NA
(33) Name of priority country	:NA
(86) International Application No	:NA
Filing Date	:NA
(87) International Publication No	: NA
(61) Patent of Addition to Application Number	:NA
Filing Date	:NA
(62) Divisional to Application Number	:NA
Filing Date	:NA

(71)**Name of Applicant :**
1)Patel Rameshbhai Virjeebhai
Address of Applicant :1, Shree Hari Om Saw Mill, Avni Party Plot, Sola, Ahmedabad Ahmedabad Gujarat India
(72)**Name of Inventor :**
1)Patel Rameshbhai Virjeebhai

(57) Abstract :
The invention introduces a reinforced scaffolding system engineered for unparalleled strength and durability in construction and industrial settings. The scaffolding's core features a C-shaped channel structure molded from a blend of PPA Resin and GP Resin, delivering exceptional resistance to environmental factors and mechanical stresses. Central to its design is a wooden core composed of deodar wood, meticulously selected and treated to achieve a remarkable load-bearing capacity of 1223.65 kg. This wooden core not only enhances structural integrity but also maintains a lightweight profile for ease of handling and transport. Manufacturing involves precise injection molding of the resin blend to form the C-shaped channel, followed by insertion and secure attachment of the wooden core. Additionally, reinforcing elements may be integrated into the resin blend to further bolster structural strength. The innovative scaffolding system sets a new standard for reliability and performance, offering contractors and workers a versatile and durable solution for their scaffolding needs.

No. of Pages : 16 No. of Claims : 10

(12) PATENT APPLICATION PUBLICATION
(21) Application No.202421034730 A
(19) INDIA
(22) Date of filing of Application :01/05/2024
(43) Publication Date : 07/11/2025

(54) Title of the invention : SYSTEM AND METHOD FOR ESTIMATING POPULATION COVERAGE IN A WIRELESS COMMUNICATION NETWORK

(51) International classification	:G06F0011340000, G06Q0050300000, G06N0003040000, G06F0011360000, G16B0040300000	(71)**Name of Applicant :** **1)Jio Platforms Limited** Address of Applicant :Office - 101, Saffron, Nr. Centre Point, Panchwati 5 Rasta, Ambawadi, Ahmedabad 380006, Gujarat India Ahmedabad Gujarat India
(31) Priority Document No	:NA	(72)**Name of Inventor :** **1)Bhatnagar, Pradeep Kumar**
(32) Priority Date	:NA	**2)Bhatnagar, Aayush**
(33) Name of priority country	:NA	**3)Shetty, Manoj**
(86) International Application No	:NA	**4)Chitaliya, Dharmesh**
Filing Date	:NA	**5)Hanumant, Kadam**
(87) International Publication No	: NA	**6)Virkar, Sneha**
(61) Patent of Addition to Application Number	:NA	**7)Krishna, Neelabh**
Filing Date	:NA	
(62) Divisional to Application Number	:NA	
Filing Date	:NA	

(57) Abstract :
Disclosed is a system (300) and a method (400) for estimating population coverage in a wireless communication network (100). The method includes partitioning (402) a coverage map of a coverage area (106) associated with a plurality of cells (102) into a plurality of grids. The method further includes determining (404), based on a mapping of trace data associated with User Equipment (UEs) on the plurality of grids, a count of the UEs in each grid of the plurality of grids. Further, the method includes tagging (406) each grid with a corresponding coverage bucket among a plurality of coverage buckets. Furthermore, the method includes estimating (408) the population coverage in a specific area within the coverage area based on a total count of the UEs in a specific coverage bucket among the plurality of coverage buckets in the specific area and a total count of the UEs in the specific area. FIG. 4

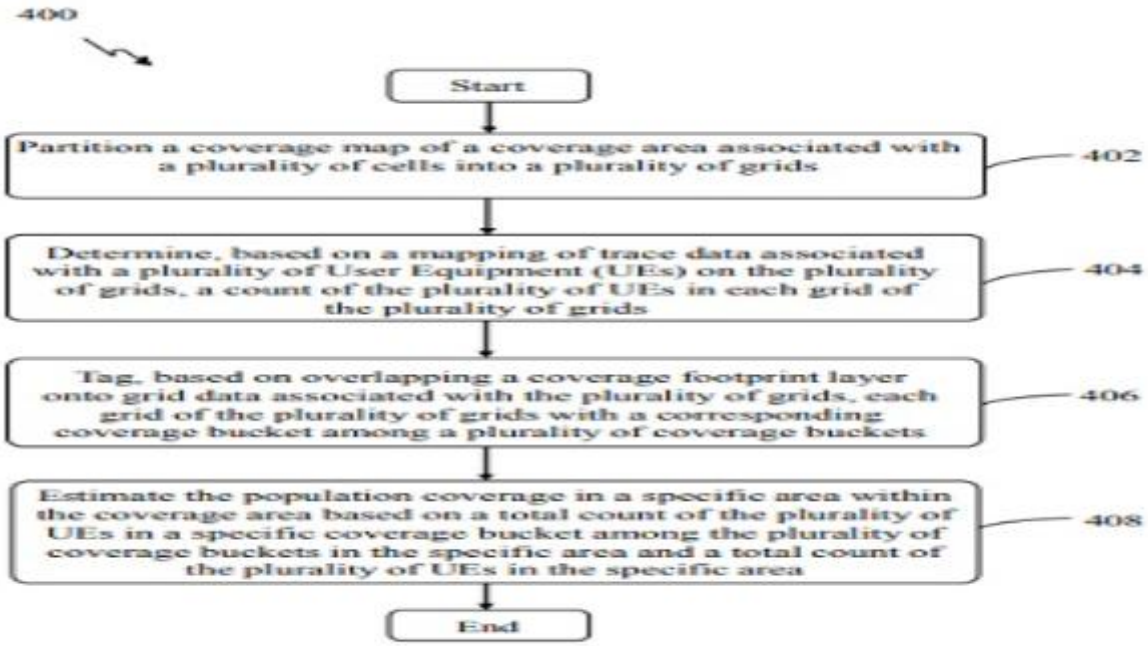

FIG. 4

No. of Pages : 41 No. of Claims : 14

(12) PATENT APPLICATION PUBLICATION
(21) Application No.202421035256 A
(19) INDIA
(22) Date of filing of Application :03/05/2024
(43) Publication Date : 07/11/2025

(54) Title of the invention : A METHOD AND A SYSTEM FOR MANAGING POWER TO AN ELECTRIC LOAD

(51) International classification	:G01R19/165, G01R31/34, G05F5/00, G05B19/02, G08B21/18, H02H3/06	(71)**Name of Applicant :** **1)Atomberg Technologies Private Limited** Address of Applicant :Office No. 1205, 12th Floor, Rupa Solitaire, Millennium Business Park, Thane-Belapur Road, Mahape, Navi Mumbai 400710, Maharashtra, India Navi Mumbai Maharashtra India (72)**Name of Inventor :**
(31) Priority Document No	:NA	**1)NARINGREKAR, Vaibhav Vishnu**
(32) Priority Date	:NA	**2)DHAKAR, Sunil**
(33) Name of priority country	:NA	
(86) International Application No	:NA	
Filing Date	:NA	
(87) International Publication No	: NA	
(61) Patent of Addition to Application Number	:NA	
Filing Date	:NA	
(62) Divisional to Application Number	:NA	
Filing Date	:NA	

(57) Abstract :
Methods (100A, 100B) and systems (200A, 200B) for managing power to an electric load (260). The system (200A) includes a monitoring module (242) configured for monitoring, continuously, an input voltage to the load (260). Further, the system (200A) includes a microcontroller (244) configured to compare the monitored voltage to a predefined threshold voltage value (Vth) and disconnect the load 260 and start a time counter when the monitored voltage falls below Vth. The microcontroller (244) is configured to increase an error count when the timer count is not greater than the predefined threshold timer value (Tth). Furthermore, the microcontroller (244) is configured to compare the error count to a predefined threshold count value (Cth). The system (200A) includes an interface (250) configured to alert a user of the electric load when the error count is not less than the predefined threshold count value (Cth).

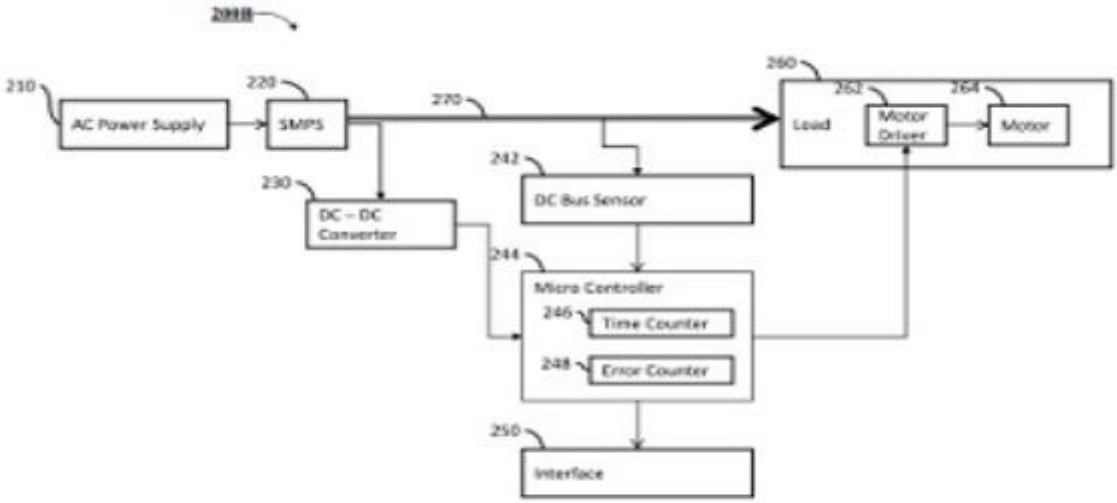

FIGURE 2B

No. of Pages : 31 No. of Claims : 13

(12) PATENT APPLICATION PUBLICATION
(21) Application No.202421035257 A
(19) INDIA
(22) Date of filing of Application :03/05/2024
(43) Publication Date : 07/11/2025

(54) Title of the invention : CHEMICAL SYNTHESIS PROCESS FOR NICKEL OXIDE THIN FILM AND USED FOR OXYGEN EVOLUTION REACTION.

(51) International classification	:C25B0001040000, B01J0035000000, H01L0029786000, C23C0016520000, B01J0035020000	(71)**Name of Applicant :** **1)DR. DEOKATE RAMESH JIVARAM** Address of Applicant :A-16, BLOSSOM CITY, TANMBENAGAR, BARAMATI-413 133, DIST. PUNE, MAHARASHTRA, INDIA. Maharashtra India **2)MR. BULAKHE SURAJ CHANDRABHAN**
(31) Priority Document No	:NA	
(32) Priority Date	:NA	(72)**Name of Inventor :**
(33) Name of priority country	:NA	**1)DR. DEOKATE RAMESH JIVARAM**
(86) International Application No	:NA	**2)MR. BULAKHE SURAJ CHANDRABHAN**
Filing Date	:NA	
(87) International Publication No	: NA	
(61) Patent of Addition to Application Number	:NA	
Filing Date	:NA	
(62) Divisional to Application Number	:NA	
Filing Date	:NA	

(57) Abstract :
Abstract: The present work describes the chemical synthesis process for the deposition of crystalline Nickel oxide (NiO) thin film on Nickel foam (Ni-foam) substrates placed in contact with aqueous solutions. The deposition of NiO thin film over Ni-foam substrates carried out using aqueous precursor solutions of Nickel nitrate with varying deposition time and precursor's concentration at constant potential of-0.9 V. The effects of the preparative parameters on the electrochemical performance were studied. The XRD and SEM analyses of NiO thin film confirmed a cubic nature and interconnected porous nanoflakes morphology useful or water splitting application. The prepared material is used for oxygen evaluation reaction (OER) application with significant Faradic efficiency.

No. of Pages : 14 No. of Claims : 3

(12) PATENT APPLICATION PUBLICATION
(21) Application No.202421035285 A
(19) INDIA
(22) Date of filing of Application :03/05/2024
(43) Publication Date : 07/11/2025

(54) Title of the invention : NOVEL RP-HPLC METHOD FOR ESTIMATION OF DONEPEZIL HYDROCHLORIDE: DEVELOPMENT AND VALIDATION

(51) International classification	:G01N0030020000, A61K0031445000, A61P0025280000, C07D0211320000, G01N0030860000
(31) Priority Document No	:NA
(32) Priority Date	:NA
(33) Name of priority country	:NA
(86) International Application No	:NA
Filing Date	:NA
(87) International Publication No	: NA
(61) Patent of Addition to Application Number	:NA
Filing Date	:NA
(62) Divisional to Application Number	:NA
Filing Date	:NA

(71)**Name of Applicant :**
1)LNCT University
Address of Applicant :LNCT University, J K Town, Kolar Road, Bhopal, Madhya Pradesh 462042 Bhopal Madhya Pradesh India
(72)**Name of Inventor :**
1)Sunayana kesharwani
2)Shubham Gautam
3)Parul Mehta

(57) Abstract :
This invention presents a modest and cost-effective stability-indicating method for quantitatively determining Donepezil Hydrochloride (DPH) using Reverse-Phase High-Performance Liquid Chromatography (RP-HPLC). Employing a Thermo C18 column (250mm x 4.60mm, 5µ particle size) bonded with Octadecylsilane (C18), the method utilizes a mobile phase consisting of 50% Methanol and 50% Acetonitrile for efficient separation. Analysis is conducted at ambient temperature with a flow rate of 1.0 ml/min, and a 20 µl sample is injected into the system, with detection occurring at a wavelength of 268nm. The retention time for Donepezil Hydrochloride is determined to be 5.680±0.01 minutes. This method offers a dependable and sensitive approach for determining Donepezil Hydrochloride, rendering it suitable for stability-indicating assays in pharmaceutical formulations.

No. of Pages : 14 No. of Claims : 2

(12) PATENT APPLICATION PUBLICATION
(21) Application No.202421035337 A
(19) INDIA
(22) Date of filing of Application :03/05/2024
(43) Publication Date : 07/11/2025

(54) Title of the invention : SYNERGISTIC PESTICIDE COMPOSITIONS AND FORMULATIONS THEREOF

(51) International classification	:A01N65/22, A01N25/04, A01N65/06, A01N65/44, A01P7/00	(71)**Name of Applicant :** **1)Ross Lifescience USA Inc.** Address of Applicant :8623 Rocky Gap Ct., Lorton, Virginia 22079, United States of America. U.S.A. (72)**Name of Inventor :** **1)NAIR, Pavana** **2)POTDAR, Amol** **3)SRIDHAR, S.** **4)KSHIRSAGAR, Rajendra Dattu**
(31) Priority Document No	:NA	
(32) Priority Date	:NA	
(33) Name of priority country	:NA	
(86) International Application No	:NA	
Filing Date	:NA	
(87) International Publication No	: NA	
(61) Patent of Addition to Application Number	:NA	
Filing Date	:NA	
(62) Divisional to Application Number	:NA	
Filing Date	:NA	

(57) Abstract :
The present disclosure provides a pesticide composition for controlling various indoor and outdoor pests, said composition including: Pogostemon cablin in an amount ranging from 1% to 25% by weight of the composition; Citral in an amount ranging from 1% to 30% by weight of the composition; Anethum graveolens in an amount ranging from 1% to 25% by weight of the composition; p-Cymene in an amount ranging from 1% to 30% by weight of the composition; Pimpinella anisum in an amount ranging from 1% to 25% by weight of the composition; and rest being an excipient. The ingredients of the composition of the present disclosure exhibit functional reciprocity there between, and accordingly aid in repelling, reducing, preventing, killing and/or controlling the population of indoor as well as outdoor pests.

No. of Pages : 24 No. of Claims : 10

(12) PATENT APPLICATION PUBLICATION
(21) Application No.202421035353 A
(19) INDIA
(22) Date of filing of Application :03/05/2024
(43) Publication Date : 07/11/2025

(54) Title of the invention : PREPARATION OF GRAPHENE-RUBBER MASTERBATCH

(51) International classification	:C08L33/04, C08J3/22, C08K3/04, C08K5/098, C08K9/06, C08K13/06, C08L9/06, C08L23/16	(71)**Name of Applicant :** **1)CEAT LIMITED** Address of Applicant :RPG HOUSE, 463, Dr. Annie Besant Road, Worli, Mumbai, Maharashtra 400 030, India Maharashtra India (72)**Name of Inventor :** **1)NAIR, Sujith** **2)BHADRA, Sambhu** **3)ARYA, Vaibhav Kumar**
(31) Priority Document No	:NA	
(32) Priority Date	:NA	
(33) Name of priority country	:NA	
(86) International Application No	:NA	
Filing Date	:NA	
(87) International Publication No	: NA	
(61) Patent of Addition to Application Number	:NA	
Filing Date	:NA	
(62) Divisional to Application Number	:NA	
Filing Date	:NA	

(57) Abstract :
ABSTRACT PREPARATION OF GRAPHENE-RUBBER MASTERBATCH The present disclosure provides a method of preparing graphene-rubber masterbatch, said method comprising: (a) mixing graphite and at least one rubber in a two-roll mill to obtain a mixture; and (b) passing the mixture through the two-roll mill to 5 obtain the graphene-rubber masterbatch, wherein the two-roll mill is maintained in a friction ratio in a range of 1:2 to 1:6. The present disclosure also provides a tyre composition comprising the graphene-rubber masterbatch and the tyre composition exhibits improved tensile strength and modulus at elongation.

No. of Pages : 28 No. of Claims : 16

(12) PATENT APPLICATION PUBLICATION
(19) INDIA
(22) Date of filing of Application :03/05/2024
(21) Application No.202421035358 A
(43) Publication Date : 07/11/2025

(54) Title of the invention : A Hub Assembly for a Fan

(51) International classification	:F04D0029340000, F16D0027112000, B60B0027000000, F04D0029640000, B60B0027020000	(71)**Name of Applicant :** **1)ATOMBERG TECHNOLOGIES PRIVATE LIMITED** Address of Applicant :Office No. 1205, Millennium Business Park, MIDC Industrial Area, Sector 1, Kopar Khairane, Navi Mumbai- 400710, India Navi Mumbai Maharashtra India
(31) Priority Document No	:NA	(72)**Name of Inventor :**
(32) Priority Date	:NA	**1)Rahul Pal**
(33) Name of priority country	:NA	**2)Ajay Anirudh Sahani**
(86) International Application No	:NA	**3)Vaibhav Vishnu Naringrekar**
Filing Date	:NA	**4)Pratik Sadanand Patil**
(87) International Publication No	: NA	**5)Manoj Meena**
(61) Patent of Addition to Application Number	:NA	**6)Manish Kumar**
Filing Date	:NA	**7)Parimi Sai Madhu Pavan Kumar**
(62) Divisional to Application Number	:NA	**8)Zulqarnain Najar**
Filing Date	:NA	

(57) Abstract :
ABSTRACT A Hub Assembly for a Fan The present invention relates to a hub assembly (100) for a fan. The hub assembly (100) comprises a rotor (120) disposed in a housing (106). The hub assembly (100) further has a stator assembly (130) radially inside the rotor (120) in the housing (106). The stator assembly (130) comprises a top insulator (134) and a bottom insulator (140) for insulating a plurality of stator windings (138) from a stator core (136). The bottom insulator (140) comprises one or more protrusions (152a) adapted to receive at least one electrical component (108) and one or more fastening provisions (150a) for receiving a cover member (110) that is adapted to cover at least one electrical component (108). Reference Figure 1

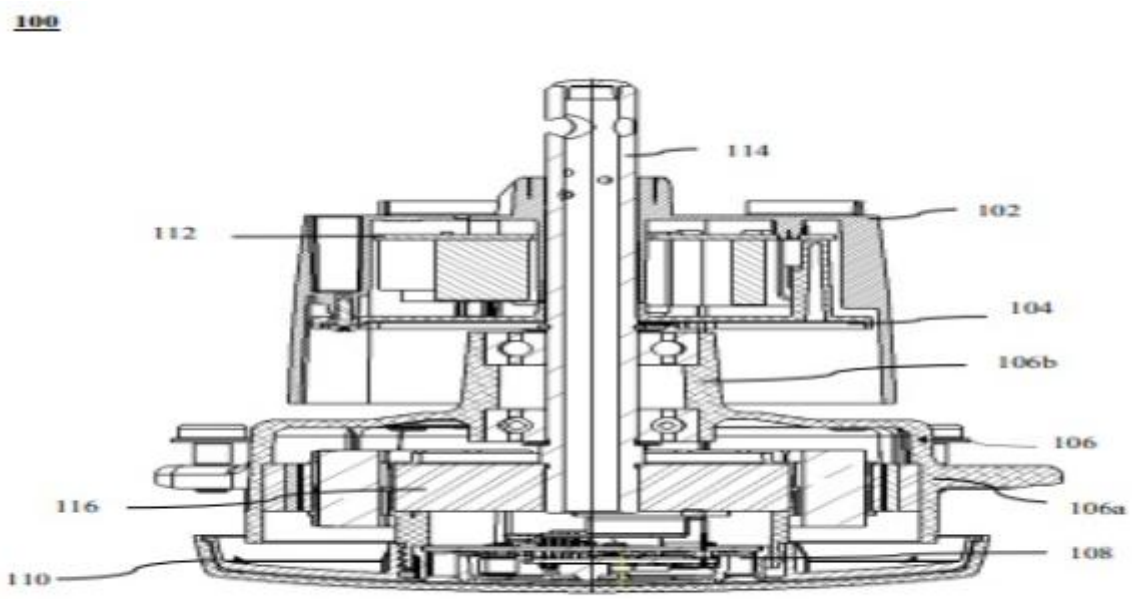

Figure 1

No. of Pages : 24 No. of Claims : 11

(12) PATENT APPLICATION PUBLICATION
(21) Application No.202421035382 A
(19) INDIA
(22) Date of filing of Application :03/05/2024
(43) Publication Date : 07/11/2025

(54) Title of the invention : METHOD AND SYSTEM FOR TASK ANTICIPATION BY INTEGRATING LARGE LANGUAGE MODELS AND CLASSICAL PLANNING

(51) International classification	:G10L0015183000, G06F0040274000, G06F0040400000, F02D0031000000, G06F0003048100	(71)**Name of Applicant :** **1)Tata Consultancy Services Limited** Address of Applicant :Nirmal Building, 9th Floor, Nariman Point, Mumbai 400021, Maharashtra, India Mumbai Maharashtra India
(31) Priority Document No	:NA	(72)**Name of Inventor :**
(32) Priority Date	:NA	**1)BANERJEE, Snehasis**
(33) Name of priority country	:NA	**2)BHOWMICK, Brojeshwar**
(86) International Application No	:NA	**3)ARORA, Raghav**
Filing Date	:NA	**4)DATTA, Ahana**
(87) International Publication No	: NA	**5)SINGH, Shivam**
(61) Patent of Addition to Application Number	:NA	**6)SWAMINATHAN, Karthik**
Filing Date	:NA	**7)KRISHNA, Madhava**
(62) Divisional to Application Number	:NA	**8)SRIDHARAN, Mohan**
Filing Date	:NA	**9)JATAVALLABHULA, Krishna Murthy**

(57) Abstract :
The present invention generally relates to the field of robotics, and, more particularly, to a method and system for task anticipation by integrating large language models and classical planning. Conventional methods for task anticipating use data-driven deep network architectures and Large Language Models (LLMs) for task estimation but they do so at the level of high-level tasks and require a large number of training examples. Thus, embodiments of present disclosure provide a method and system for task anticipation by integrating large language models and classical planning. The disclosed method and system leverages the generic knowledge of LLMs through a small number of prompts to perform high-level task anticipation, using the anticipated tasks as joint goals in a classical planning system to compute a sequence of finer granularity actions that jointly achieve these goals.

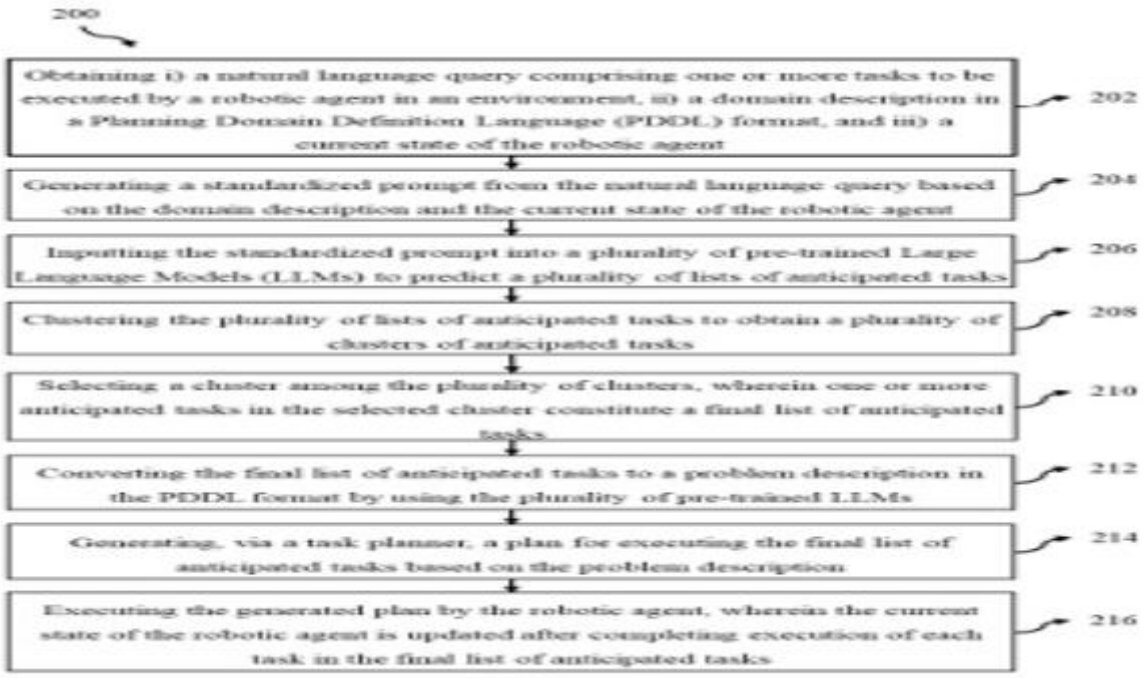

FIG. 2

No. of Pages : 47 No. of Claims : 12

(12) PATENT APPLICATION PUBLICATION
(21) Application No.202421035396 A
(19) INDIA
(22) Date of filing of Application :03/05/2024
(43) Publication Date : 07/11/2025

(54) Title of the invention : A PROCESS OF PREPARATION OF IMPURITIES IN DRUG TENELIGLIPTIN AND VILDAGLIPTIN

(51) International classification	:C07D207/16, C07D403/14, C07D487/04, C07D417/14, A61K9/20, A61P31/00	(71)**Name of Applicant :** **1)BVDU's Poona College of Pharmacy** Address of Applicant :Bharati Vidyapeeth (Deemed to be) University, Paud Road, Erandwane, Pune 411038, Maharashtra, India Pune Maharashtra India (72)**Name of Inventor :** **1)Rajesh Rane** **2)Dileep Kumar** **3)Bapu Gawade** **4)Anil Gawade** **5)L Sathiyanarayanan** **6)Sneha Ketkale**
(31) Priority Document No	:NA	
(32) Priority Date	:NA	
(33) Name of priority country	:NA	
(86) International Application No	:NA	
Filing Date	:NA	
(87) International Publication No	: NA	
(61) Patent of Addition to Application Number	:NA	
Filing Date	:NA	
(62) Divisional to Application Number	:NA	
Filing Date	:NA	

(57) Abstract :
Disclosed is a process of preparation of N-nitrosamine Impurities of Teneligliptin and Vildagliptin in standard drug. The impurity synthesized is useful as standard reference during the quality control of the drug Teneligliptin and Vildagliptin. The process of preparation of N-nitrosamin impurities of Teneligliptin and Vildagliptin in standard drug comprises of synthesis of compound 2 in scheme a and scheme b. In an embodiment, the compound 2 inn scheme a is (4-(4-(3-methyl-1-phenyl-1H-pyrazol-5-yl)piperazin-1-yl)-1-nitrosopyrrolidin-2-yl)(thiazolidin-3-yl)methanone while the compound 2 in scheme b is N-(2-((S)-2-Cyanopyrrolidin-1-yl)-2-oxoethyl)-N-((1r, 3R, 5R, 7S)-3-hydroxyadamantan-1-yl) nitrous amide.

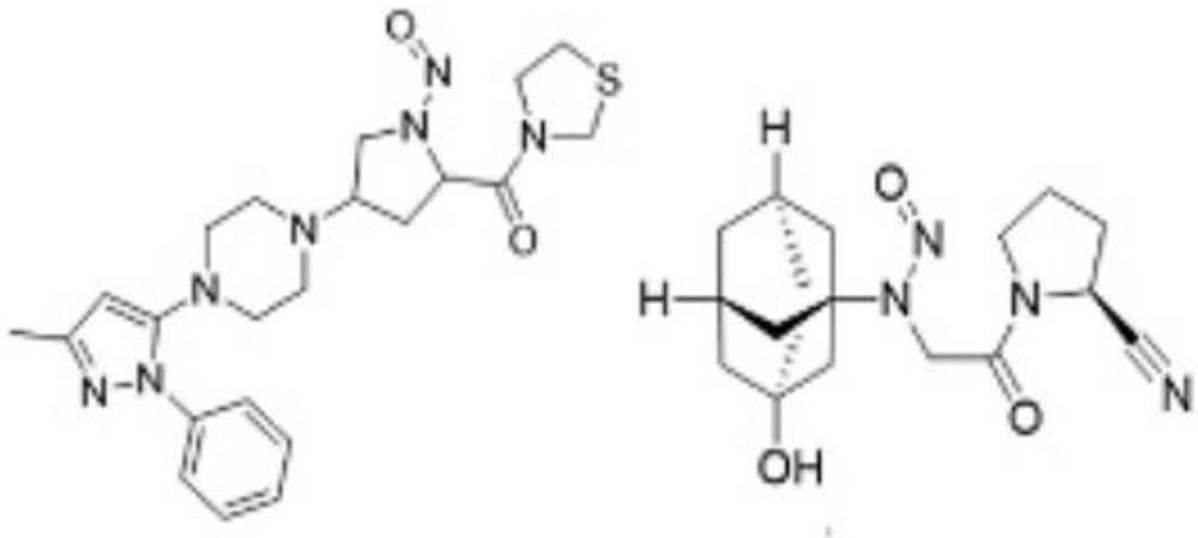

Formula II (A&B)

No. of Pages : 18 No. of Claims : 3

(12) PATENT APPLICATION PUBLICATION
(21) Application No.202524029296 A
(19) INDIA
(22) Date of filing of Application :27/03/2025
(43) Publication Date : 07/11/2025

(54) Title of the invention : A BATTERY CHARGER DEVICE PROVIDING SUPPRESSION OF RIPPLE CURRENTS

(51) International classification :H02J7/00, H02M1/14
(31) Priority Document No :24173765.9
(32) Priority Date :02/05/2024
(33) Name of priority country :EPO
(86) International Application No :NA
Filing Date :NA
(87) International Publication No : NA
(61) Patent of Addition to Application Number :NA
Filing Date :NA
(62) Divisional to Application Number :NA
Filing Date :NA

(71)**Name of Applicant :**
1)ALSTOM HOLDINGS
Address of Applicant :48, rue Albert Dhalenne FR-93400 SAINT-OUEN-SUR-SEINE, FRANCE France
(72)**Name of Inventor :**
1)Olle TROLLBERG
2)Henrik MOSSKULL
3)Kanani ASHOK

(57) Abstract :
ABSTRACT A BATTERY CHARGER DEVICE PROVIDING SUPPRESSION OF RIPPLE CURRENTS Battery charger (2) for charging battery module (4) batteries comprising: diode rectifier (6), for rectifying three-phase supply voltage US, to DC voltage(8), battery chopper (10) for generating charging DC voltage (12) from the DC voltage for charging the batteries, dependant on control ratio (CR) data of a control signal (14), battery charger control unit (16) comprising a main control module(18) for calculating and generating main control signal comprising main CR data (19) for a step-up chopper (10) controlled to generate charging DC voltage. Battery charger control unit (16) comprises estimation calculation module (24) for estimating values (26) of DC voltage (8) ripple on amplitude/phase/frequency based upon supply voltage US frequency/amplitude for determining ripple CR data and ripple suppression CR data (30) having the opposite phase of ripple CR data and determining a control signal (14) to chopper (10) where ripple suppression CR data (30) is superimposed on main CR data.

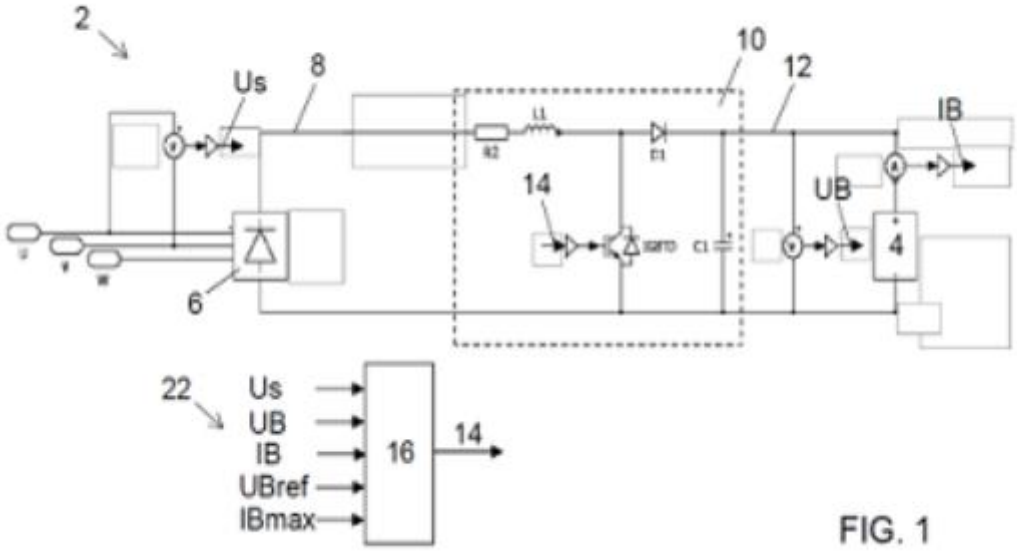

FIG. 1

No. of Pages : 19 No. of Claims : 6

(12) PATENT APPLICATION PUBLICATION
(21) Application No.202524032530 A
(19) INDIA
(22) Date of filing of Application :02/04/2025
(43) Publication Date : 07/11/2025

(54) Title of the invention : IDLE-AVOIDANCE SYSTEM FOR WORK VEHICLE AND ENGINE SYSTEM USING SAME

(51) International classification	:H02J0007140000, B60W0010080000, B60W0010060000, B60L0001000000, B60L0058120000
(31) Priority Document No	:18/655746
(32) Priority Date	:06/05/2024
(33) Name of priority country	:U.S.A.
(86) International Application No	:NA
Filing Date	:NA
(87) International Publication No	: NA
(61) Patent of Addition to Application Number	:NA
Filing Date	:NA
(62) Divisional to Application Number	:NA
Filing Date	:NA

(71)**Name of Applicant :**
1)Deere & Company
Address of Applicant :One John Deere Place, Moline, Illinois, 61265 USA U.S.A.
(72)**Name of Inventor :**
1)KHADIYA, NAVIN

(57) Abstract :
An idle-avoidance system for a work vehicle having an engine and one or more work components includes an electric machine coupled to and driven by the engine and a battery coupled to the engine, the electric machine, and the one or more work components. The idle-avoidance system further includes a controller having a processing and memory architecture. The controller is configured to execute instructions to determine whether the engine is in an idling state and in response estimate a power demand associated with energizing at least one of the one or more work components to an operational state, monitor a state of charge of the battery, terminate operation of the engine when the state of charge of the battery is sufficient to meet the estimated power demand, and activate ignition of the engine and operation of the electric machine in a power generation mode to charge the battery when the state of charge of the battery is not sufficient to meet the estimated power demand.

No. of Pages : 45 No. of Claims : 12

(12) PATENT APPLICATION PUBLICATION
(21) Application No.202527070535 A
(19) INDIA
(22) Date of filing of Application :24/07/2025
(43) Publication Date : 07/11/2025

(54) Title of the invention : PHARMACEUTICAL PREPARATION COMPRISING ANTI TIGIT ANTIBODY

(51) International classification	:A61K 39/395, A61K 9/08, A61K 47/18, A61K 47/26, C07K 16/28
(31) Priority Document No	:202211713441.7
(32) Priority Date	:27/12/2022
(33) Name of priority country	:China
(86) International Application No	:PCT/CN2023/141838
Filing Date	:26/12/2023
(87) International Publication No	:WO 2024/140651
(61) Patent of Addition to Application Number	:NA
Filing Date	:NA
(62) Divisional to Application Number	:NA
Filing Date	:NA

(71)**Name of Applicant :**
1)SHANGHAI HENLIUS BIOTECH INC.
Address of Applicant :Room 330 Complex Building No. 222 Kangnan Road China (Shanghai) Pilot Free Trade Zone Pudong New Area Shanghai 201210 China
2)SHANGHAI HENLIUS BIOPHARMACEUTICAL CO. LTD.
3)SHANGHAI HENLIUS BIOLOGICS CO. LTD.
(72)**Name of Inventor :**
1)PU Tianning
2)FANG Yuan
3)HAN Dongmei

(57) Abstract :
A pharmaceutical preparation comprising an anti TIGIT antibody comprising an anti TIGIT antibody a stabilizer a buffer solution and a surfactant.

No. of Pages : 55 No. of Claims : 13

(12) PATENT APPLICATION PUBLICATION
(21) Application No.202527070993 A
(19) INDIA
(22) Date of filing of Application :25/07/2025
(43) Publication Date : 07/11/2025

(54) Title of the invention : ANTI PDL1 ANTIBODIES AND METHODS OF USE

(51) International classification	:C07K 16/28, C07K 16/46, C07K 19/00, C12N 15/13, C12N 15/63
(31) Priority Document No	:PCT/CN2022/143510
(32) Priority Date	:29/12/2022
(33) Name of priority country	:China
(86) International Application No	:PCT/CN2023/143108
Filing Date	:29/12/2023
(87) International Publication No	:WO 2024/140997
(61) Patent of Addition to Application Number	:NA
Filing Date	:NA
(62) Divisional to Application Number	:NA
Filing Date	:NA

(71)**Name of Applicant :**
1)SHANGHAI HENLIUS BIOTECH INC.
Address of Applicant :Room 330 Complex Building No. 222 Kangnan Road China (Shanghai) Pilot Free Trade Zone Pudong New Area Shanghai 201210 China
2)SHANGHAI HENLIUS BIOPHARMACEUTICAL CO. LTD.
3)SHANGHAI HENLIUS BIOLOGICS CO. LTD.
(72)**Name of Inventor :**
1)XUE Jie
2)XU Wenfeng
3)JIANG Wei Dong
4)LIN Pei Hua
5)ISSAFRAS Hassan

(57) Abstract :
Provided are antibodies and antibody derivatives that bind to PDL1 and methods of using the same. The antibody or antibody derivative comprises a single domain antibody that binds to PDL1.

No. of Pages : 82 No. of Claims : 37

(12) PATENT APPLICATION PUBLICATION
(21) Application No.202527071560 A
(19) INDIA
(22) Date of filing of Application :28/07/2025
(43) Publication Date : 07/11/2025

(54) Title of the invention : ANTI PDL1/VEGF ANTIBODIES AND METHODS OF USE

(51) International classification	:C07K 16/46, C12N 15/13, C12N 15/63, C12N 5/00, A61P 35/00
(31) Priority Document No	:PCT/CN2022/143506
(32) Priority Date	:29/12/2022
(33) Name of priority country	:China
(86) International Application No	:PCT/CN2023/143107
Filing Date	:29/12/2023
(87) International Publication No	:WO 2024/140996
(61) Patent of Addition to Application Number	:NA
Filing Date	:NA
(62) Divisional to Application Number	:NA
Filing Date	:NA

(71)**Name of Applicant :**
1)SHANGHAI HENLIUS BIOTECH INC.
Address of Applicant :Room 330 Complex Building No. 222 Kangnan Road China (Shanghai) Pilot Free Trade Zone Pudong New Area Shanghai 201210 China
2)SHANGHAI HENLIUS BIOPHARMACEUTICAL CO. LTD.
3)SHANGHAI HENLIUS BIOLOGICS CO. LTD.
(72)**Name of Inventor :**
1)CHEN Yu Syaun
2)XIONG Shengen
3)SONG Ge
4)SHAN Yongqiang
5)XUE Jie
6)XU Wenfeng
7)JIANG Wei Dong
8)LIN Pei Hua
9)ISSAFRAS Hassan

(57) Abstract :
Provided is an antibody or an antibody derivative that bind to PDL1 and methods of using the same. The antibody or antibody derivative disclosed herein comprises a single domain antibody that binds to PDL1. Also the antibody derivative can be a multispecific antibody that binds to PDL1 and VEGF.

No. of Pages : 95 No. of Claims : 37

(12) PATENT APPLICATION PUBLICATION
(21) Application No.202527071564 A
(19) INDIA
(22) Date of filing of Application :28/07/2025
(43) Publication Date : 07/11/2025

(54) Title of the invention : ANTI CD47 ANTIBODIES AND METHODS OF USE

(51) International classification	:C07K 16/28, C07K 16/46, C07K 19/00, C12N 5/10, C12N 15/13
(31) Priority Document No	:PCT/CN2022/143504
(32) Priority Date	:29/12/2022
(33) Name of priority country	:China
(86) International Application No	:PCT/CN2023/143103
Filing Date	:29/12/2023
(87) International Publication No	:WO 2024/140993
(61) Patent of Addition to Application Number	:NA
Filing Date	:NA
(62) Divisional to Application Number	:NA
Filing Date	:NA

(71)**Name of Applicant :**
1)SHANGHAI HENLIUS BIOTECH INC.
Address of Applicant :Room 330 Complex Building No. 222 Kangnan Road China (Shanghai) Pilot Free Trade Zone Pudong New Area Shanghai 201210 China
2)SHANGHAI HENLIUS BIOPHARMACEUTICAL CO. LTD.
3)SHANGHAI HENLIUS BIOLOGICS CO. LTD.
(72)**Name of Inventor :**
1)BARAL Toya
2)XU Wenfeng

(57) Abstract :
Provided are antibodies and antibody derivatives that bind to CD47(also known as IAP MER6 and OA3) and methods of using the same. In certain embodiments an anti CD47 antibody or antibody derivate disclosed herein exhibits reduced binding to a red blood cell.

No. of Pages : 79 No. of Claims : 32

(12) PATENT APPLICATION PUBLICATION
(19) INDIA
(22) Date of filing of Application :06/05/2024
(21) Application No.202421035757 A
(43) Publication Date : 07/11/2025

(54) Title of the invention : SYSTEM AND METHOD FOR IDENTIFYING LOCATION OF A UE SESSION IN A COMMUNICATION NETWORK

(51) International classification	:H04W0056000000, G06F0011360000, H04W0028020000, H01L0029423000, H03M0001740000
(31) Priority Document No	:NA
(32) Priority Date	:NA
(33) Name of priority country	:NA
(86) International Application No	:NA
Filing Date	:NA
(87) International Publication No	: NA
(61) Patent of Addition to Application Number	:NA
Filing Date	:NA
(62) Divisional to Application Number	:NA
Filing Date	:NA

(71)**Name of Applicant :**
1)Jio Platforms Limited
Address of Applicant :Office - 101, Saffron, Nr. Centre Point, Panchwati 5 Rasta, Ambawadi, Ahmedabad 380006, Gujarat India Ahmedabad Gujarat India
(72)**Name of Inventor :**
1)Bhatnagar, Pradeep Kumar
2)Bhatnagar, Aayush
3)Shetty, Manoj
4)Chitaliya, Dharmesh
5)Kadam, Hanumant
6)Virkar, Sneha
7)Krishna, Neelabh

(57) Abstract :
Disclosed herein is a method (500) for identifying a location of a session of a User Equipment (UE) (104) in trace data. The method includes receiving the trace data including information of a Timing Advance (TA) value of a source cell and TA values of neighboring cells. The method further includes generating, based on the trace data, a first coverage arc on the source cell and a second coverage arc for each of the neighboring cells. Furthermore, the method includes mapping a Best Server Plot on an intersection area of the first coverage arc with the second coverage arc and identifying grids where a serving cell of the BSP is similar to the source cell and a difference between RSRP values is within a threshold limit. Thereafter, the method includes identifying the location of the session of the UE in the trace data based on the identified grids. FIG. 5

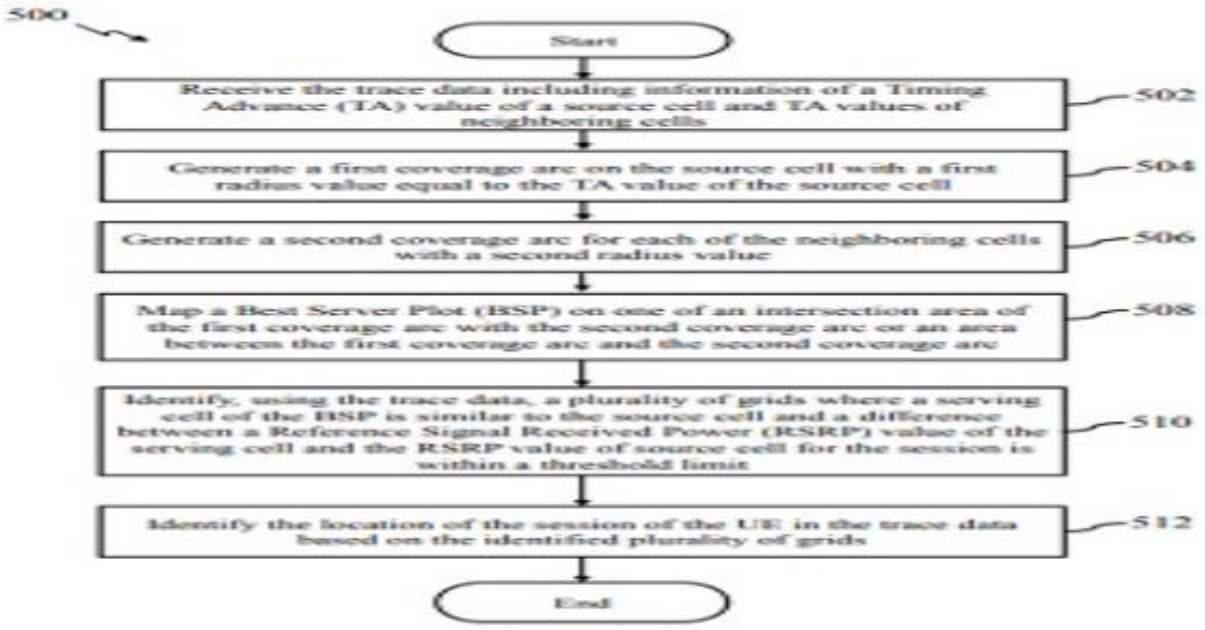

FIG. 5

No. of Pages : 44 No. of Claims : 16

(12) PATENT APPLICATION PUBLICATION
(19) INDIA
(22) Date of filing of Application :06/05/2024
(21) Application No.202421035824 A
(43) Publication Date : 07/11/2025

(54) Title of the invention : AN IMPROVED MICROWAVE DEVICE

(51) International classification :H05B6/72, H05B6/70
(31) Priority Document No :NA
(32) Priority Date :NA
(33) Name of priority country :NA
(86) International Application No :NA
Filing Date :NA
(87) International Publication No : NA
(61) Patent of Addition to Application Number :NA
Filing Date :NA
(62) Divisional to Application Number :NA
Filing Date :NA

(71)**Name of Applicant :**
1)SP3 TECHNOLOGIES LLP
Address of Applicant :Plot No. C1/B-6219, Road No. 62, Nr. Telephone Exchange, G.I.D.C., Sachin, Surat - 394230, Gujarat, India. Surat Gujarat India
(72)**Name of Inventor :**
1)KUMAR, Pramod
2)VIRANI, Kishor
3)VADODARIYA, Praful
4)NAKRANEE, Alpesh
5)VIRANI, Kewal K
6)VADODARIYA, Nevil
7)YADAV, Ajay Kumar S.

(57) Abstract :
A present disclosure pertains to an improved microwave device (200). The microwave device (200) comprises a microwave applicator cavity (102) to facilitate exposure of a target object to microwave energy. The microwave device (200) comprises a microwave source (104) coupled to the microwave applicator cavity (102). The microwave source (104) is configured to generate the microwave energy to be exposed over the target object. Further, the microwave device (200) comprises a launcher (106) that couples the microwave source (104) with the microwave applicator cavity (102). The launcher (106) is configured to transmit the microwave energy radiated from the microwave source (104) to the microwave applicator cavity (102) in form of microwaves. Furthermore, the launcher (106) comprises a cooling means (202, 204) configured to facilitate thermal flow from inside of the launcher (106) to an outside environment without electromagnetic (EM) leakage from the microwaves.

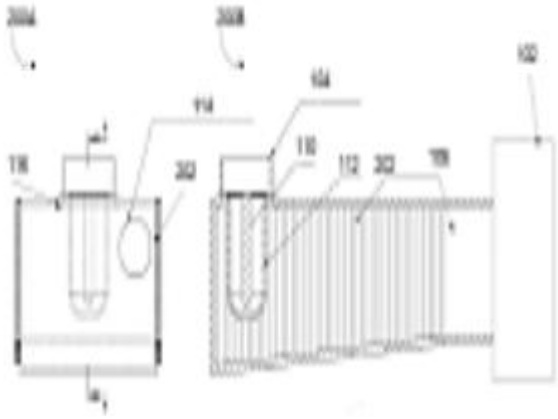

FIG. 2A FIG. 2B

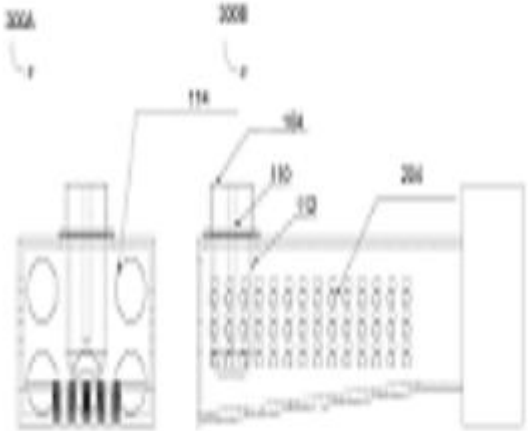

FIG. 3A FIG. 3B

No. of Pages : 18 No. of Claims : 10

(12) PATENT APPLICATION PUBLICATION
(21) Application No.202421035893 A
(19) INDIA
(22) Date of filing of Application :06/05/2024
(43) Publication Date : 07/11/2025

(54) Title of the invention : A FUMIGATION SYSTEM FOR A COMPRESSION IGNITION (CI) ENGINE AND METHOD THEREOF

(51) International classification	:F02D0019060000, F02D0019080000, F02D0041000000, F02M0035100000, F02M0021020000	(71)**Name of Applicant :** **1)The Automotive Research Association of India (ARAI)** Address of Applicant :Survey No. 102, Vetal Hill, Off Paud Road, Kothrud, Pune - 411038, Maharashtra, India Pune Maharashtra India
(31) Priority Document No	:NA	(72)**Name of Inventor :** **1)SONAWANE, Shailesh Balkrishna**
(32) Priority Date	:NA	
(33) Name of priority country	:NA	
(86) International Application No	:NA	
Filing Date	:NA	
(87) International Publication No	: NA	
(61) Patent of Addition to Application Number	:NA	
Filing Date	:NA	
(62) Divisional to Application Number	:NA	
Filing Date	:NA	

(57) Abstract :
The present invention discloses a fumigation system (100) for a compression ignition (CI) engine (102) and method (300) comprising a CI engine (102), a second fuel tank (104) for storing and supplying a pre-mixed alcohol based fuel (132) to a fumigation injector (130) through at least one secondary fuel line (114). The fumigation injector (130) is located on the air intake manifold (116) of the CI engine (102) before an inlet valve (124) to spray the pre-mixed alcohol based high octane fuel (132) into an inlet air.

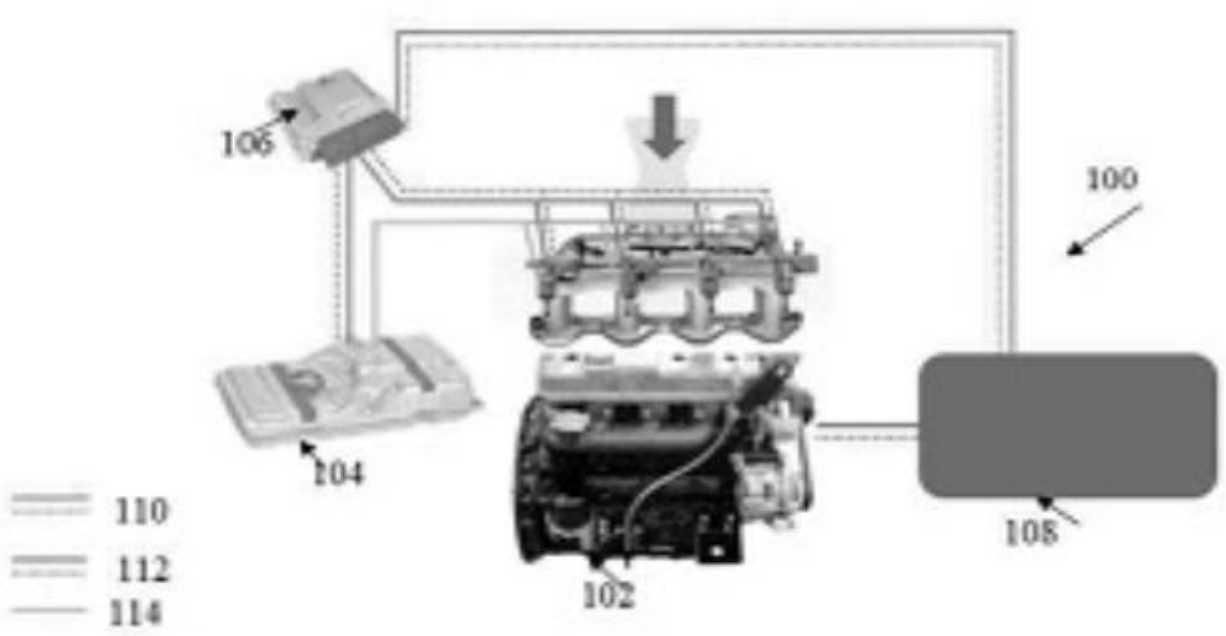

Figure 1 (a)

No. of Pages : 26 No. of Claims : 14

(12) PATENT APPLICATION PUBLICATION
(21) Application No.202527082300 A
(19) INDIA
(22) Date of filing of Application :29/08/2025
(43) Publication Date : 07/11/2025

(54) Title of the invention : TRANSMISSION ASSEMBLY OF HANDLE DEVICE, HANDLE DEVICE, VEHICLE DOOR AND VEHICLE

(51) International classification	:E05B 85/10, E05B 79/22, E05B 77/38, E05B 85/00
(31) Priority Document No	:202320262304.X
(32) Priority Date	:10/02/2023
(33) Name of priority country	:China
(86) International Application No	:PCT/CN2024/074393
Filing Date	:29/01/2024
(87) International Publication No	:WO 2024/164861
(61) Patent of Addition to Application Number	:NA
Filing Date	:NA
(62) Divisional to Application Number	:NA
Filing Date	:NA

(71)**Name of Applicant :**
1)BYD COMPANY LIMITED
Address of Applicant :No. 3009, BYD Road, Pingshan Shenzhen, Guangdong 518118 China
(72)**Name of Inventor :**
1)ZHANG, Xiaoqiang
2)QI, Kun
3)JIANG, Xuyao
4)LIU, Yiming
5)LI, Ming
6)XIE, Lianghua

(57) Abstract :
A transmission assembly (100) of a handle device, a handle device, a vehicle door, and a vehicle. The transmission assembly (100) comprises: a base (1); a crankshaft (3), an output end of the crankshaft (3) being adapted to connect to a door lock push bar (9) and drive the door lock push bar (9) to move; a first fitting member (31), provided at an input end of the crankshaft (3); a second fitting member (41), the second fitting member (41) being configured to rotate under the action of an external force, the second fitting member (41) being adapted to fit with the first fitting member (31) so as to drive the first fitting member (31) to rotate, and the first fitting member (31) driving the door lock push bar (9) to move by means of the crankshaft (3) so as to achieve unlocking.

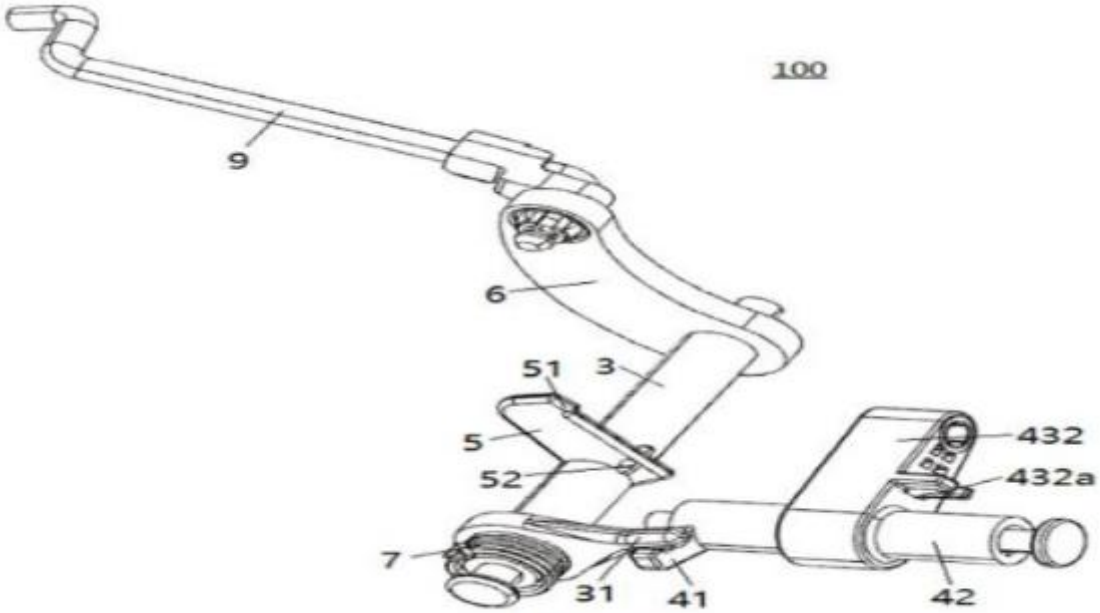

FIG. 6

No. of Pages : 27 No. of Claims : 24

(12) PATENT APPLICATION PUBLICATION
(19) INDIA
(22) Date of filing of Application :25/09/2025
(21) Application No.202522092086 A
(43) Publication Date : 07/11/2025

(54) Title of the invention : ATTENUATION OF CYTOKINE RELEASE SYNDROME IN IMMUNOTHERAPY

(51) International classification	:C12N0015113000, C07K0014535000, A61K0039000000, C07K0016280000, C12N0015850000
(31) Priority Document No	:NA
(32) Priority Date	:NA
(33) Name of priority country	:NA
(86) International Application No	:NA
Filing Date	:NA
(87) International Publication No	: NA
(61) Patent of Addition to Application Number	:NA
Filing Date	:NA
(62) Divisional to Application Number	:202221053836
Filed on	:20/10/2022

(71)**Name of Applicant :**
1)MICRO CRISPR Pvt. Ltd.
Address of Applicant :Survey No: 1574, Muktanand Marg, Chala, Vapi-396191, Gujarat, India Gujarat India
(72)**Name of Inventor :**
1)BILAKHIA, Aaman Anjum
2)LAD, Nilay Mohanlal
3)KEDARIA, Dhaval Ashvinbhai
4)PANWAR, Urvi Hrishiraj
5)AICH, Jyotirmoi
6)VYAS, Jitendra Devendra
7)AKHTAR, Areej

(57) Abstract :
TITLE OF THE INVENTION: ATTENUATION OF CYTOKINE RELEASE SYNDROME IN IMMUNOTHERAPY The present invention discloses a recombinant nucleic acid molecule encoded at least by an ORF (100, 100a, 100b) to lower a cytokine storm during immunotherapy. The recombinant nucleic acid molecule includes at least one hairpin loop structure and a first promoter (120). The hairpin loop structure regulates an amount of Granulocyte monocyte colony stimulating factor (GMCSF) cytokine during immunotherapy. The hairpin loop structure is formed by one or more short hairpin RNA (130) sequences. The first promoter (120) is disposed upstream of the at least one hairpin loop structure. Fig. 2b

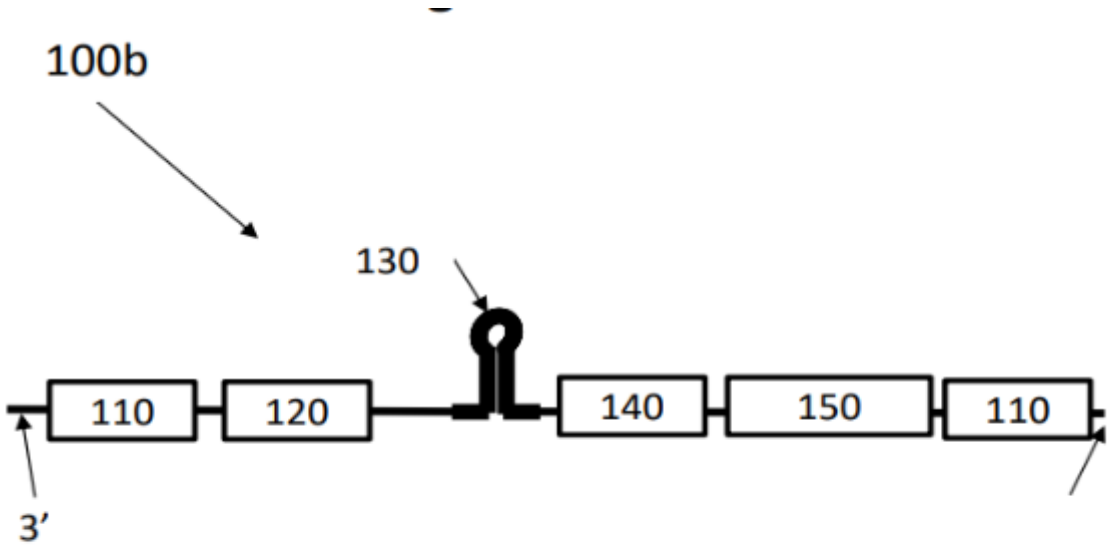

Fig. 2b

No. of Pages : 87 No. of Claims : 21

(12) PATENT APPLICATION PUBLICATION
(19) INDIA
(22) Date of filing of Application :07/10/2025

(21) Application No.202522096480 A
(43) Publication Date : 07/11/2025

(54) Title of the invention : SYSTEM AND METHOD OF NETWORK SWITCHING

(51) International classification	:H04W0036000000, H04W0008080000, H04W0008040000, H04W0036080000, H04W0088060000
(31) Priority Document No	:NA
(32) Priority Date	:NA
(33) Name of priority country	:NA
(86) International Application No	:NA
Filing Date	:NA
(87) International Publication No	: NA
(61) Patent of Addition to Application Number	:NA
Filing Date	:NA
(62) Divisional to Application Number	:202321023228
Filed on	:29/03/2023

(71)**Name of Applicant :**
1)JIO PLATFORMS LIMITED
Address of Applicant :Office-101, Saffron, Nr. Centre Point, Panchwati 5 Rasta, Ambawadi, Ahmedabad - 380006, Gujarat, India Gujarat India
(72)**Name of Inventor :**
1)JHA, Adityakar
2)BHATNAGAR, Aayush
3)AMBANI, Akash Mukesh
4)BAVISHI, Hardik Navinbhai
5)KULKARNI, Veerat Sunil

(57) Abstract :
The present disclosure relates to a system (100) and a method for switching user equipment(s) (UEs) between communication networks (4G, 5G, and 6G). The method includes detecting an outage (service failure or interruption in service) in a network based on a reference signal received power (RSRP), a reference signal received quality (RSRQ), and a signal-to-interference-plus-noise ratio (SINR) and switching the UE from a first network to a second network. On detecting the outage, a mobility management entity (MME) queries a home subscriber server (HSS) for the UE usage type. If the user is 4G-only, the MME selects 4G network and if the user is migrated to 4G/5G combination core, then the MME selects the 5G network. A circle-wise global flag in the HSS return “4G” for the MME query regarding the UE usage type, so the MME selects the 4G core and the user will move to the 4G network.

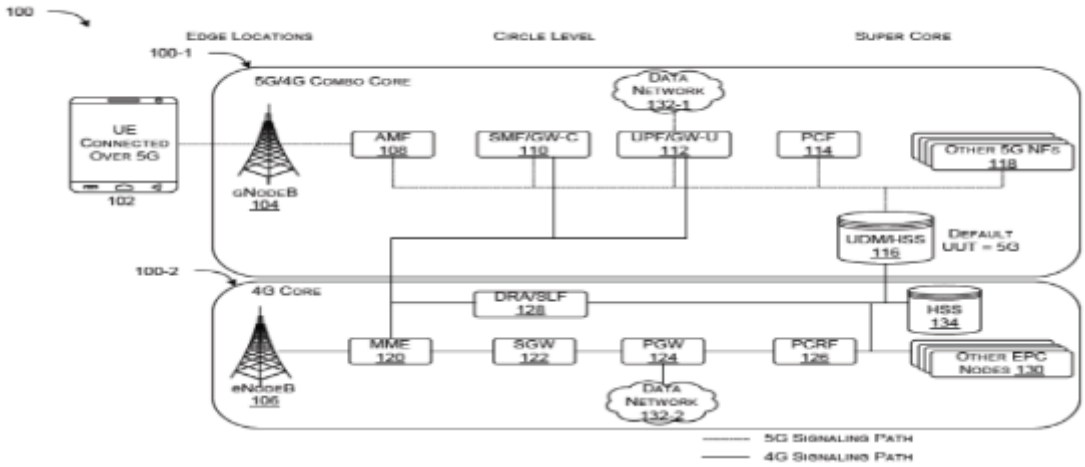

FIG. 1

No. of Pages : 62 No. of Claims : 19

(12) PATENT APPLICATION PUBLICATION
(19) INDIA
(22) Date of filing of Application :24/09/2025
(21) Application No.202528091619 A
(43) Publication Date : 07/11/2025

(54) Title of the invention : SYSTEMS AND METHODS FOR PROGRESSIVE LEARNING FOR MACHINE-LEARNED MODELS TO OPTIMIZE TRAINING SPEED

(51) International classification	:G06N 3/04, G06N 3/063, G06N 3/08
(31) Priority Document No	:63/145,830
(32) Priority Date	:04/02/2021
(33) Name of priority country	:U.S.A.
(86) International Application No	:PCT/US2021/065448
Filing Date	:29/12/2021
(87) International Publication No	: NA
(61) Patent of Addition to Application Number	:NA
Filing Date	:NA
(62) Divisional to Application Number	:202327038824
Filed on	:06/06/2023

(71)**Name of Applicant :**
1)GOOGLE LLC
Address of Applicant :1600 Amphitheatre Parkway, Mountain View, California 94043, United States of America. U.S.A.
(72)**Name of Inventor :**
1)TAN, Mingxing
2)LE, Quoc V.

(57) Abstract :
Systems and methods of the present disclosure can include a computer-implemented method for efficient machine-learned model training. The method can include obtaining a plurality of training samples for a machine-learned model. The method can include, for one or more first training iterations, training, based at least in part on a first regularization magnitude configured to control a relative effect of one or more regularization techniques, the machine-learned model using one or more respective first training samples of the plurality of training samples. The method can include, for one or more second training iterations, training, based at least in part on a second regularization magnitude greater than the first regularization magnitude, the machine-learned model using one or more respective second training samples of the plurality of training samples. Figure 1A is the representative figure.

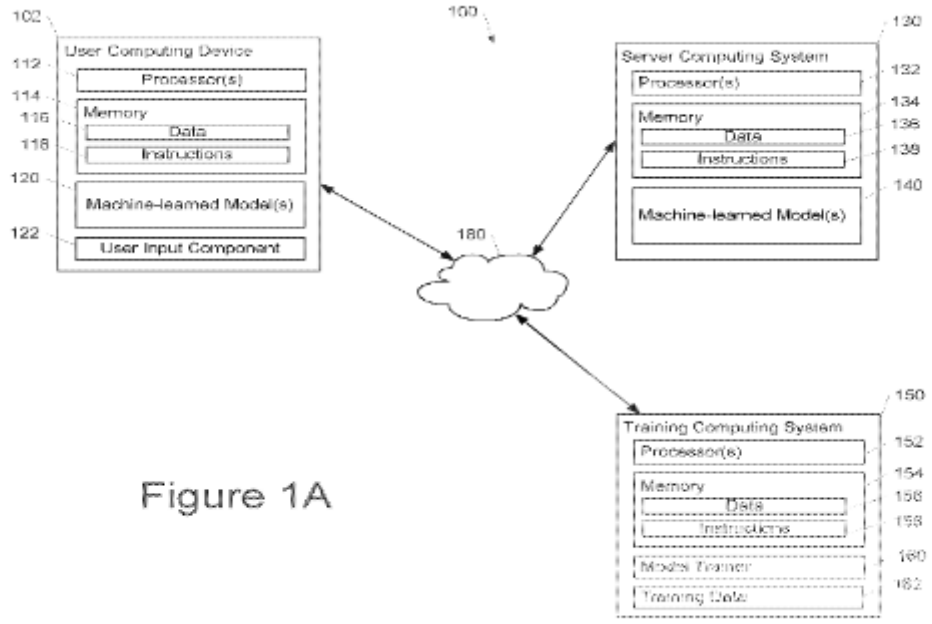

Figure 1A

No. of Pages : 38 No. of Claims : 13

(12) PATENT APPLICATION PUBLICATION
(21) Application No.202528096475 A
(19) INDIA
(22) Date of filing of Application :07/10/2025
(43) Publication Date : 07/11/2025

(54) Title of the invention : CPU, RESOURCE, AND PORT OCCUPATION FOR MULTI-TRP CSI

(51) International classification	:H04W 24/10, H04L 5/00
(31) Priority Document No	:NA
(32) Priority Date	:NA
(33) Name of priority country	:NA
(86) International Application No	:PCT/CN2020/074182
Filing Date	:03/02/2020
(87) International Publication No	: NA
(61) Patent of Addition to Application Number	:NA
Filing Date	:NA
(62) Divisional to Application Number	:202227039789
Filed on	:11/07/2022

(71)**Name of Applicant :**
1)QUALCOMM INCORPORATED
Address of Applicant :ATTN: International IP Administration 5775 Morehouse Drive San Diego California United States of America 92121-1714 U.S.A.
(72)**Name of Inventor :**
1)HAO, Chenxi
2)ZHANG, Yu
3)WEI, Chao
4)WU, Liangming
5)LI, Qiaoyu
6)XU, Hao
7)CHERAGHI, Parisa
8)XIAO, Lei
9)KHOSHNEVISAN, Mostafa
10)ZHANG, Xiaoxia

(57) Abstract :
ABSTRACT "CPU, RESOURCE, AND PORT OCCUPATION FOR MULTI-TRP CSI" Certain aspects of the present disclosure provide techniques for channel state information (CSI) processing occupation determination that can be used even in multiple transmission reception point (mTRP) scenarios. A method that may be performed by a user equipment (UE) includes receiving a channel state information (CSI) reporting configuration configuring the UE with a plurality of CSI reference signal (CSI-RS) resources for channel measurement (CMRs). The method includes determining a number of occupied CSI processing units, a number of occupied active CSI resources, and/or a number of occupied active CSI-RS ports based on an actual number of CSI measurements. The method includes performing CSI measurement based on the determination. [FIG. 12]

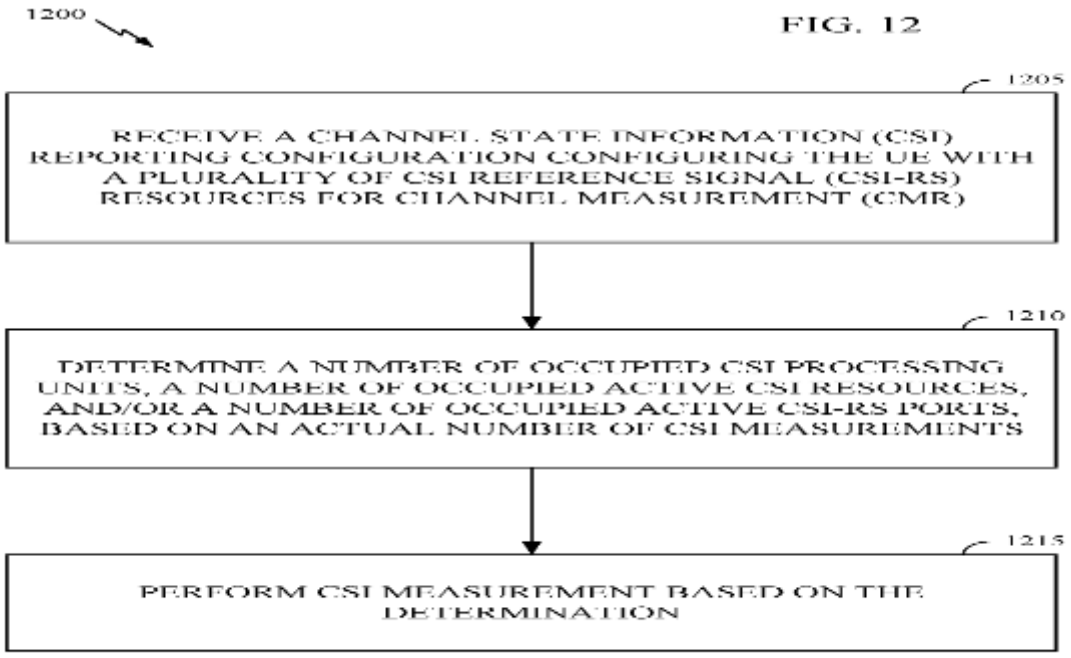

No. of Pages : 53 No. of Claims : 16

(12) PATENT APPLICATION PUBLICATION
(19) INDIA
(22) Date of filing of Application :28/10/2025
(21) Application No.202528103944 A
(43) Publication Date : 07/11/2025

(54) Title of the invention : AUTO-PAIRING ROTATION VECTOR

(51) International classification	:G01C 21/20, G06F 3/0346, G06F 3/01, G02B 27/01, G06V 20/20
(31) Priority Document No	:17/643,360
(32) Priority Date	:08/12/2021
(33) Name of priority country	:U.S.A.
(86) International Application No	:PCT/US2022/080009
Filing Date	:17/11/2022
(87) International Publication No	: NA
(61) Patent of Addition to Application Number	:NA
Filing Date	:NA
(62) Divisional to Application Number	:202427031343
Filed on	:19/04/2024

(71)**Name of Applicant :**
1)QUALCOMM INCORPORATED
Address of Applicant :Attn: International IP Administration, 5775 Morehouse Drive, San Diego, California 92121-1714, United States of America U.S.A.
(72)**Name of Inventor :**
1)TENG, Diyan
2)SOMAN, Mehul

(57) Abstract :
ABSTRACT “AUTO-PAIRING ROTATION VECTOR” Innovative techniques utilize rotation vectors (RV) and game rotation vectors (GRV) for authentication are proposed. The proposed techniques enable auto-pairing of devices when the RVs/GRVs of the devices are aligned with each other. The proposed techniques also enable authentication of a user utilizing RVs/GRVs to a device. FIG. 5

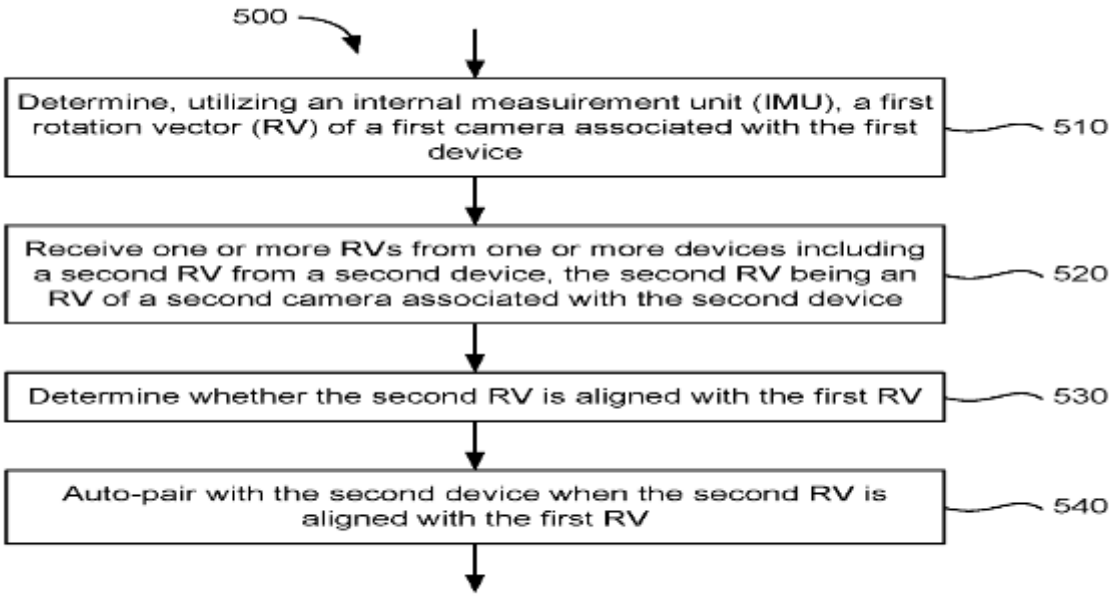

FIG. 5

No. of Pages : 59 No. of Claims : 15

(12) PATENT APPLICATION PUBLICATION
(21) Application No.202528104087 A
(19) INDIA
(22) Date of filing of Application :29/10/2025
(43) Publication Date : 07/11/2025

(54) Title of the invention : MULTI-CHANNEL SIGNAL ENCODING AND DECODING METHOD AND CODEC

(51) International classification	:G10L 19/04, H04S 5/00
(31) Priority Document No	:201710205821.2
(32) Priority Date	:31/03/2017
(33) Name of priority country	:China
(86) International Application No	:PCT/CN2018/077782
Filing Date	:01/03/2018
(87) International Publication No	: NA
(61) Patent of Addition to Application Number	:NA
Filing Date	:NA
(62) Divisional to Application Number	:201927038102
Filed on	:01/03/2018

(71)**Name of Applicant :**
1)HUAWEI TECHNOLOGIES CO., LTD.
Address of Applicant :Huawei Administration Building, Bantian, Longgang, Shenzhen, Guangdong 518129, China China
(72)**Name of Inventor :**
1)LIU, Zexin
2)MIAO, Lei

(57) Abstract :
A multi-channel signal encoding method, a multi-channel signal decoding method, an encoder, and a decoder are provided. The encoding method includes: determining (310) a downmixed signal of a first channel signal and a second channel signal in a multi-channel signal, an initial reverberation gain parameter of the first channel signal and the second channel signal; determining (320) a target reverberation gain parameter of the first channel signal and the second channel signal based on a correlation between the first channel signal and the downmixed signal, a correlation between the second channel signal and the downmixed signal, and the initial reverberation gain parameter; and quantizing (330) the first channel signal and the second channel signal based on the downmixed signal and the target reverberation gain parameter, and writing a quantized first channel signal and a quantized second channel signal into a bitstream. Quality of a channel signal obtained after reverberation processing can be improved according to the encoding method, the decoding method, the encoder, and the decoder. Fig. 3

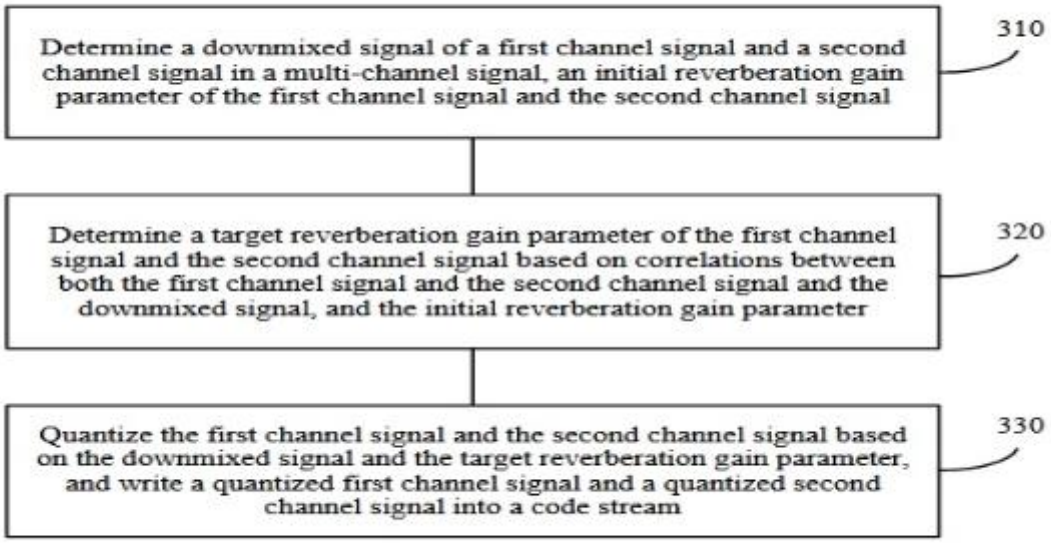

FIG. 3

No. of Pages : 79 No. of Claims : 2

(12) PATENT APPLICATION PUBLICATION
(21) Application No.202528104274 A
(19) INDIA
(22) Date of filing of Application :29/10/2025
(43) Publication Date : 07/11/2025

(54) Title of the invention : MULTI-CHANNEL SIGNAL ENCODING AND DECODING METHOD AND CODEC

(51) International classification	:G10L 19/04, H04S 5/00
(31) Priority Document No	:201710205821.2
(32) Priority Date	:31/03/2017
(33) Name of priority country	:China
(86) International Application No	:PCT/CN2018/077782
Filing Date	:01/03/2018
(87) International Publication No	: NA
(61) Patent of Addition to Application Number	:NA
Filing Date	:NA
(62) Divisional to Application Number	:201927038102
Filed on	:01/03/2018

(71)**Name of Applicant :**
1)HUAWEI TECHNOLOGIES CO., LTD.
Address of Applicant :Huawei Administration Building, Bantian, Longgang, Shenzhen, Guangdong Province 518129, China China
(72)**Name of Inventor :**
1)LIU, Zexin
2)MIAO, Lei

(57) Abstract :
A multi-channel signal encoding method, a multi-channel signal decoding method, an encoder, and a decoder are provided. The encoding method includes: determining (310) a downmixed signal of a first channel signal and a second channel signal in a multi-channel signal, an initial reverberation gain parameter of the first channel signal and the second channel signal; determining (320) a target reverberation gain parameter of the first channel signal and the second channel signal based on a correlation between the first channel signal and the downmixed signal, a correlation between the second channel signal and the downmixed signal, and the initial reverberation gain parameter; and quantizing (330) the first channel signal and the second channel signal based on the downmixed signal and the target reverberation gain parameter, and writing a quantized first channel signal and a quantized second channel signal into a bitstream. Quality of a channel signal obtained after reverberation processing can be improved according to the encoding method, the decoding method, the encoder, and the decoder. FIG. 3

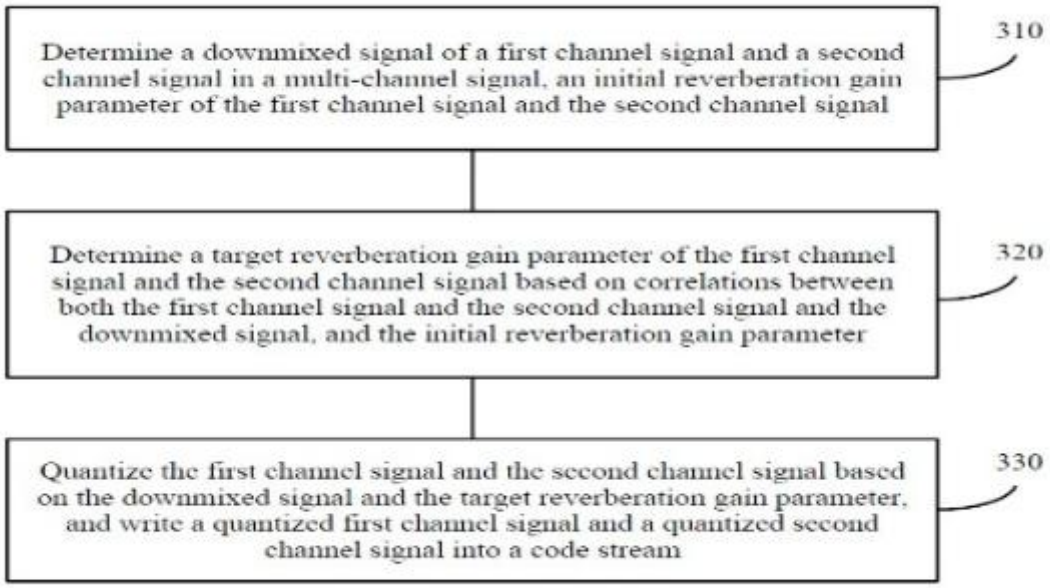

FIG. 3

No. of Pages : 74 No. of Claims : 3

(12) PATENT APPLICATION PUBLICATION
(21) Application No.202528104311 A
(19) INDIA
(22) Date of filing of Application :29/10/2025
(43) Publication Date : 07/11/2025

(54) Title of the invention : MULTI-CHANNEL SIGNAL ENCODING AND DECODING METHOD AND CODEC

(51) International classification	:G10L 19/04, H04S 5/00
(31) Priority Document No	:201710205821.2
(32) Priority Date	:31/03/2017
(33) Name of priority country	:China
(86) International Application No	:PCT/CN2018/077782
Filing Date	:01/03/2018
(87) International Publication No	: NA
(61) Patent of Addition to Application Number	:NA
Filing Date	:NA
(62) Divisional to Application Number	:201927038102
Filed on	:01/03/2018

(71)**Name of Applicant :**
1)HUAWEI TECHNOLOGIES CO., LTD.
Address of Applicant :Huawei Administration Building, Bantian, Longgang, Shenzhen, Guangdong Province 518129, China China
(72)**Name of Inventor :**
1)LIU, Zexin
2)MIAO, Lei

(57) Abstract :
A multi-channel signal encoding method, a multi-channel signal decoding method, an encoder, and a decoder are provided. The encoding method includes: determining (310) a downmixed signal of a first channel signal and a second channel signal in a multi-channel signal, an initial reverberation gain parameter of the first channel signal and the second channel signal; determining (320) a target reverberation gain parameter of the first channel signal and the second channel signal based on a correlation between the first channel signal and the downmixed signal, a correlation between the second channel signal and the downmixed signal, and the initial reverberation gain parameter; and quantizing (330) the first channel signal and the second channel signal based on the downmixed signal and the target reverberation gain parameter, and writing a quantized first channel signal and a quantized second channel signal into a bitstream. Quality of a channel signal obtained after reverberation processing can be improved according to the encoding method, the decoding method, the encoder, and the decoder. FIG. 3

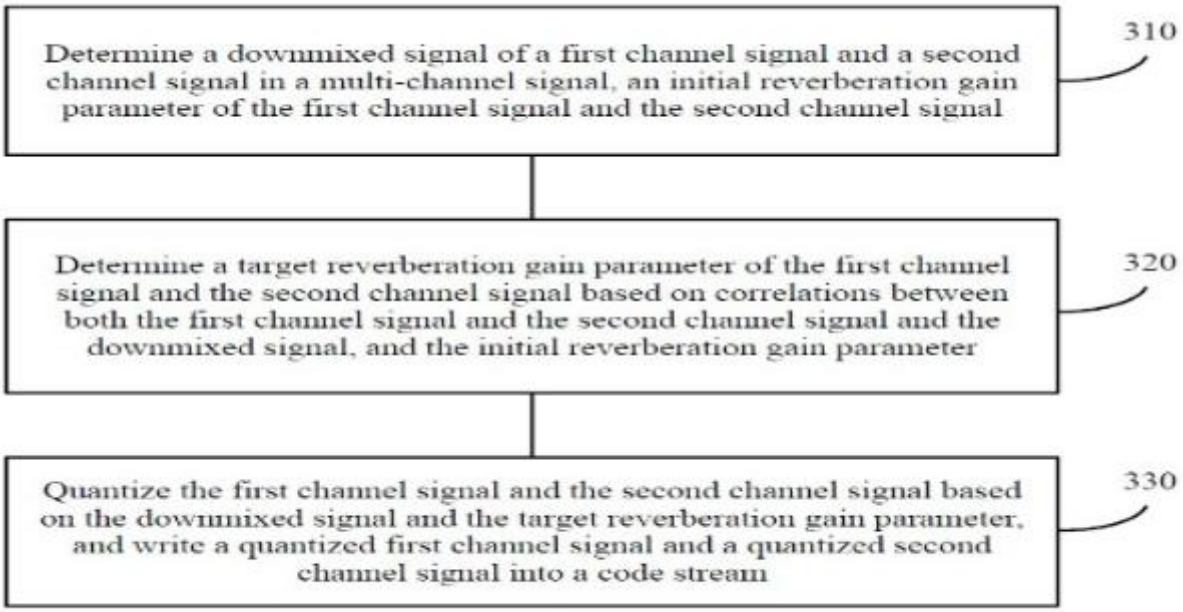

FIG. 3

No. of Pages : 74 No. of Claims : 2

(12) PATENT APPLICATION PUBLICATION
(19) INDIA
(22) Date of filing of Application :04/05/2024
(21) Application No.202421035407 A
(43) Publication Date : 07/11/2025

(54) Title of the invention : AN EXHAUST SYSTEM FOR A VEHICLE

(51) International classification	:F01N0013180000, F01N0003280000, F01N0003200000, F01N0013000000, F01N0013080000	(71)**Name of Applicant :** **1)BAJAJ AUTO LIMITED** Address of Applicant :Bajaj Auto Limited, Mumbai-Pune Road, Akurdi, Pune-411035 Pune Maharashtra India
(31) Priority Document No	:NA	(72)**Name of Inventor :** **1)Jatin Kumar Mangal**
(32) Priority Date	:NA	**2)Chandrashekhar Bhalerao**
(33) Name of priority country	:NA	**3)Deepak Deshmukh**
(86) International Application No	:NA	**4)Shrikant Utpat**
Filing Date	:NA	**5)Sivakumar G.**
(87) International Publication No	: NA	
(61) Patent of Addition to Application Number	:NA	
Filing Date	:NA	
(62) Divisional to Application Number	:NA	
Filing Date	:NA	

(57) Abstract :
The present invention discloses an exhaust system for a vehicle. The exhaust system comprising an engine as a drive source for the vehicle and an exhaust pipe (102) connected to the engine to carry gases into the atmosphere. Further, the exhaust pipe (102) comprising at least a first pipe portion (108) extending from an exhaust port of the engine, a second pipe portion (110) connected to a muffler (104) and a catalytic converter (CAT) (106) for purifying the exhaust gases and configured to carry exhaust gases from the first pipe portion (108) to the second pipe portion (110). Further, the CAT (106) is connected to the first pipe portion (108) using at least a connecting member (112). The connecting member (112) overlapping at least an inner portion of catalytic converter (122). Figures 2B and 3

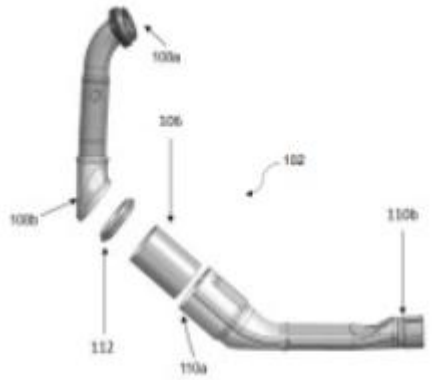

Figure 2b

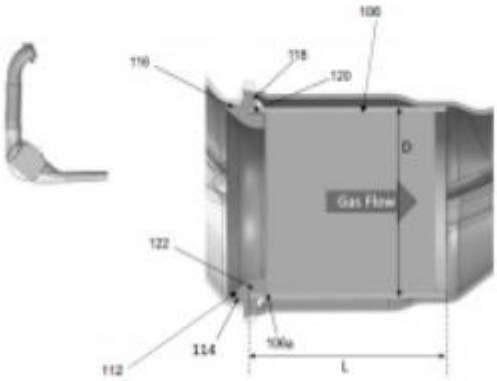

Figure 3

No. of Pages : 19 No. of Claims : 15

(12) PATENT APPLICATION PUBLICATION
(19) INDIA
(22) Date of filing of Application :05/05/2024
(21) Application No.202421035511 A
(43) Publication Date : 07/11/2025

(54) Title of the invention : METHOD AND SYSTEM FOR PERFORMING END-TO-END EVALUATION OF A LARGE LANGUAGE MODEL (LLM)

(51) International classification	:G16H0050300000, A61B0005000000, G06F0011340000, G16C0020300000, G16C0020700000
(31) Priority Document No	:NA
(32) Priority Date	:NA
(33) Name of priority country	:NA
(86) International Application No	:NA
Filing Date	:NA
(87) International Publication No	: NA
(61) Patent of Addition to Application Number	:NA
Filing Date	:NA
(62) Divisional to Application Number	:NA
Filing Date	:NA

(71)**Name of Applicant :**
1)LTI Mindtree Ltd.
Address of Applicant :L&T Technology Center, Saki Vihar Road, Powai, Mumbai Mumbai Maharashtra India
(72)**Name of Inventor :**
1)Ashish Varerkar
2)Vishwanathan Raman
3)Anindita Desarkar
4)Sateesh Gottumukkala
5)Ruchita Motwani
6)Raj Shah

(57) Abstract :
A method and a Large Language Model (LLM) evaluation system (106) provides an end-to-end evaluation of LLM, which includes evaluating both input prompts and output prompt responses, wherein the evaluation includes assessing a plurality of input and output characteristics that encompasses both quality and quantity. Each of the plurality of input characteristics are assigned with a corresponding normalized score by employing one or more statistical techniques to derive a composite health score for the input prompts. Evaluation further comprises evaluating output prompt responses in both absence and presence of the ground truth. Upon evaluating both input prompts and output prompt responses, a final aggregated health score for the LLM is computed by a scorer module (214) employing threshold based statistical techniques that considers input prompt health and output prompt response health, wherein the aggregated health score is generated based on the granular scores of each characteristic.

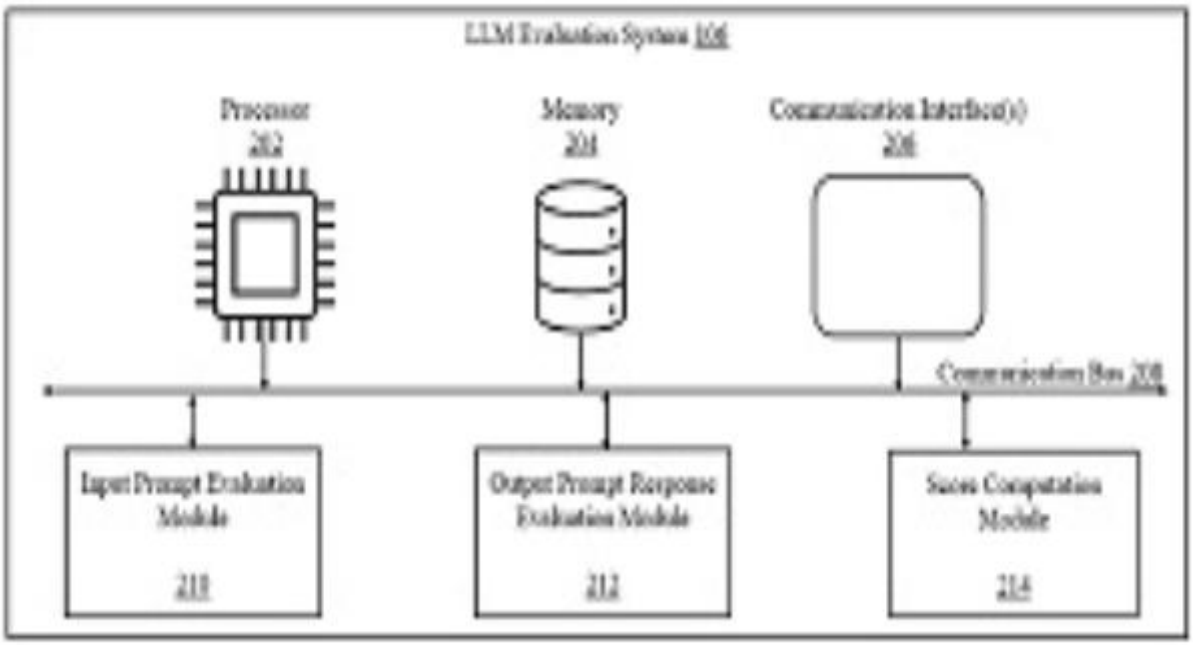

No. of Pages : 48 No. of Claims : 22

(12) PATENT APPLICATION PUBLICATION
(21) Application No.202524040058 A
(19) INDIA
(22) Date of filing of Application :25/04/2025
(43) Publication Date : 07/11/2025

(54) Title of the invention : MACHINE AND METHOD FOR BELLING PVC-O PIPES

(51) International classification	:B29C0057020000, B29C0057040000, B21D0041020000, A61B0017068000, B21D0019040000	(71)**Name of Applicant :** **1)SICA S.P.A.** Address of Applicant :VIA STROPPATA 28 48011 ALFONSINE RA, ITALY Italy
(31) Priority Document No	:102024000009877	(72)**Name of Inventor :** **1)TABANELLI GIORGIO** **2)FILIPPI ELISA**
(32) Priority Date	:02/05/2024	
(33) Name of priority country	:Italy	
(86) International Application No	:NA	
Filing Date	:NA	
(87) International Publication No	: NA	
(61) Patent of Addition to Application Number	:NA	
Filing Date	:NA	
(62) Divisional to Application Number	:NA	
Filing Date	:NA	

(57) Abstract :
ABSTRACT MACHINE AND METHOD FOR BELLING PVC-O PIPES A belling machine comprising a forming station (600), the PVC-O pipes (1) each have an integral bell socket (3) formed on it and provided with a seat (6) for receiving a gasket (100); the forming station (600) comprises a belling apparatus (40) for belling the end of the PVC-O pipe (1a) to be processed; the apparatus (40) comprises forming means (59) for forming the end of the pipe (1a) into a bell socket and which comprise a mechanical mandrel (15), intended to be inserted into one end of the pipe (1a) and a shaping flange (14) for shaping at least part of the end of the pipe (1a); the shaping flange (14) comprises an annular body (26) whose inside surface (27) defines, with the outside surface (36) of the mandrel (15), a shaping chamber (35) for shaping a portion of the bell socket (3a) being formed.

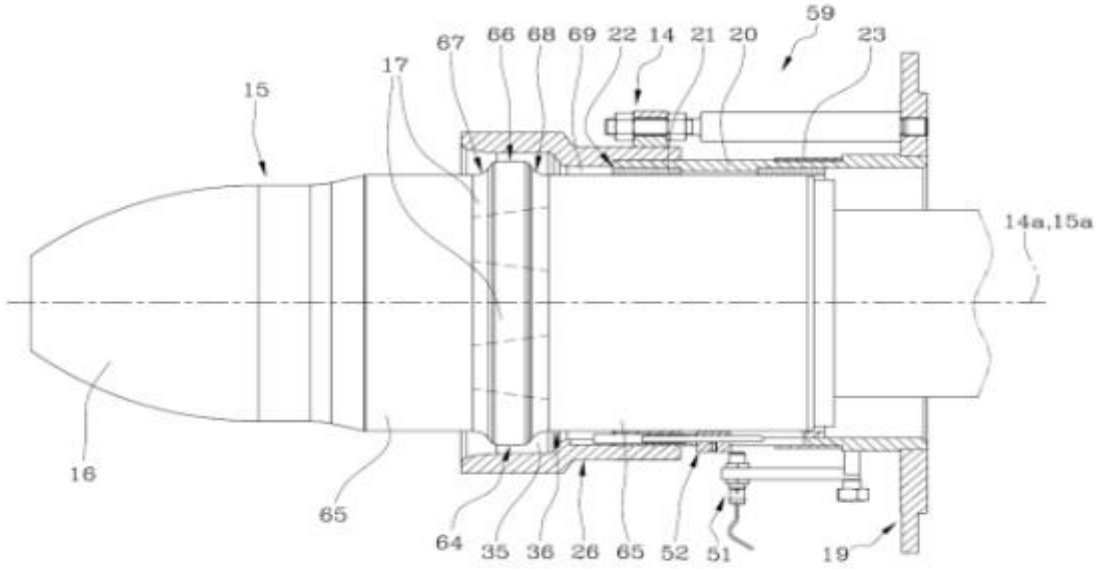

Fig.6

No. of Pages : 56 No. of Claims : 13

(12) PATENT APPLICATION PUBLICATION
(19) INDIA
(22) Date of filing of Application :22/08/2025
(21) Application No.202527079872 A
(43) Publication Date : 07/11/2025

(54) Title of the invention : A METHOD OF MODELLING A PRODUCTION SYSTEM

(51) International classification	:G06N 3/08, G01V 1/28
(31) Priority Document No	:2303112.3
(32) Priority Date	:02/03/2023
(33) Name of priority country	:U.K.
(86) International Application No	:PCT/NO2024/050053
Filing Date	:29/02/2024
(87) International Publication No	:WO 2024/181870
(61) Patent of Addition to Application Number	:NA
Filing Date	:NA
(62) Divisional to Application Number	:NA
Filing Date	:NA

(71)**Name of Applicant :**
1)SOLUTION SEEKER AS
Address of Applicant :Radhusgata 24 0151 Oslo Norway
(72)**Name of Inventor :**
1)GUNNERUD, Vidar
2)GRIMSTAD, Bjarne

(57) Abstract :
A method of modelling a production system comprises using a parametric generative model to generate synthetic production data relating to the production system, wherein the parametric generative model is adapted to simulate how production data associated with the production system is generated.

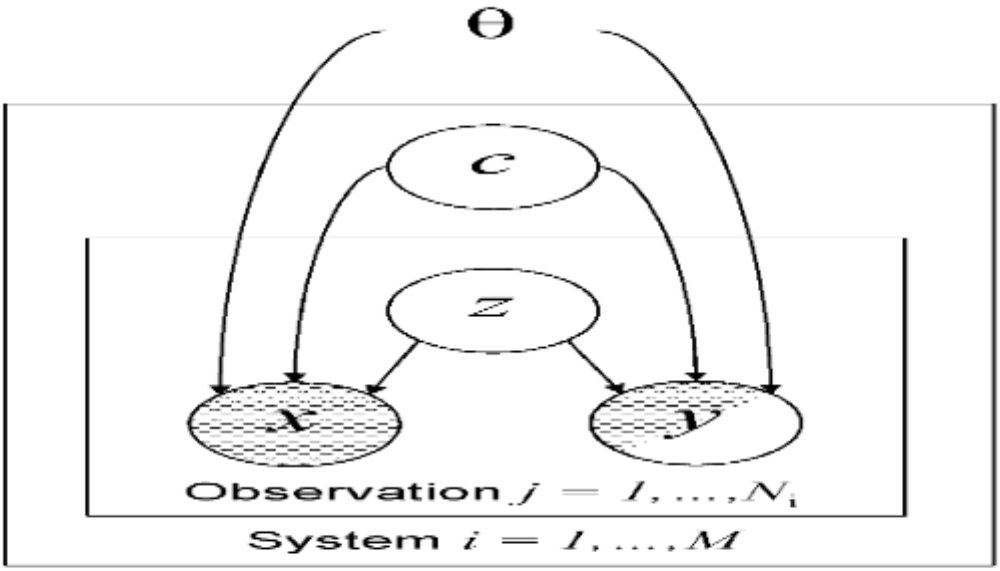

FIG. 2

No. of Pages : 45 No. of Claims : 37

(12) PATENT APPLICATION PUBLICATION
(19) INDIA
(22) Date of filing of Application :25/08/2025
(21) Application No.202527080561 A
(43) Publication Date : 07/11/2025

(54) Title of the invention : REGENERATIVE BRAKING ANTI-LOCK CONTROL METHOD, DEVICE AND SYSTEM FOR VEHICLE, AND VEHICLE

(51) International classification	:B60L 7/10, B60T 8/176
(31) Priority Document No	:202310222777.1
(32) Priority Date	:27/02/2023
(33) Name of priority country	:China
(86) International Application No	:PCT/CN2023/124886
Filing Date	:17/10/2023
(87) International Publication No	:WO 2024/178993
(61) Patent of Addition to Application Number	:NA
Filing Date	:NA
(62) Divisional to Application Number	:NA
Filing Date	:NA

(71)**Name of Applicant :**
1)BYD COMPANY LIMITED
Address of Applicant :No. 3009, BYD Road, Pingshan Shenzhen, Guangdong 518118 China
(72)**Name of Inventor :**
1)LIU, Che
2)LU, Guoxiang
3)ZHOU, Caifeng

(57) Abstract :
A regenerative braking anti-lock control method for a vehicle. The method comprises: if the required regenerative torque of a plurality of wheels, a braking state of a hydraulic braking module and the locking tendency of at least one wheel meet a first preset condition, activating a regenerative braking anti-locking mode, wherein the braking state of the hydraulic braking module comprises a state of a hydraulic braking anti-locking unit, and the first preset condition comprises that the state of the hydraulic braking anti-locking unit is a fault state; and when the regenerative braking anti-lock mode is in an activated state, adjusting, according to the locking tendency and the required regenerative torque of the wheel, the actual regenerative torque outputted by a motor. Also provided are a regenerative braking anti-lock control device and system for a vehicle, and the vehicle.

Start
Yes
No
Yes
No
Yes
No

(12) PATENT APPLICATION PUBLICATION
(19) INDIA
(22) Date of filing of Application :10/01/2025
(21) Application No.202527002502 A
(43) Publication Date : 07/11/2025

(54) Title of the invention : FLUID DRAIN CONTROL APPARATUS, SYSTEMS, AND METHODS

(51) International classification	:A61M 27/00, A61B 5/03, G16H 20/40, A61M 39/10
(31) Priority Document No	:17/840572
(32) Priority Date	:14/06/2022
(33) Name of priority country	:U.S.A.
(86) International Application No	:PCT/US2023/068467
Filing Date	:14/06/2023
(87) International Publication No	:WO 2024/163019
(61) Patent of Addition to Application Number	:NA
Filing Date	:NA
(62) Divisional to Application Number	:NA
Filing Date	:NA

(71)**Name of Applicant :**
1)MARSHAL, Fryman
Address of Applicant :626 Dowing Rd. Libertyville, IL 60048 U.S.A.
(72)**Name of Inventor :**
1)MARSHAL, Fryman

(57) Abstract :
Described herein is a safety system that works collectively with an automated fluid drain control apparatus and systems and clinical experts to establish protocols and methods forgiven patient populations to ensure that the drainage of fluid from patients is both safe and effective. It further enables the transportation of drain orders from systems external to the drain system and returns to them the drainage data on a periodic basis for inclusion into the patient chart.

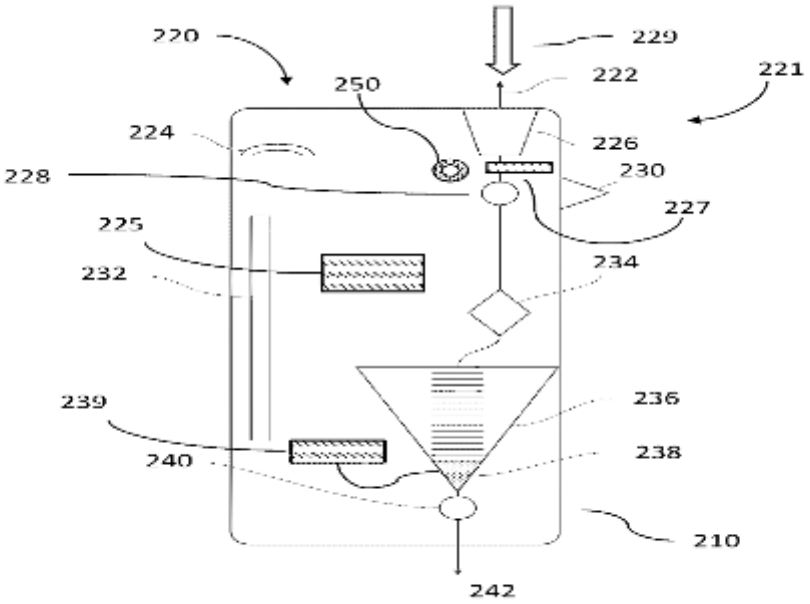

FIG. 7

No. of Pages : 47 No. of Claims : 25

(12) PATENT APPLICATION PUBLICATION
(21) Application No.202528060370 A
(19) INDIA
(22) Date of filing of Application :24/06/2025
(43) Publication Date : 07/11/2025

(54) Title of the invention : ISOLATED POLYSACCHARIDE COMPOUND AND METHOD OF USE AND MANUFACTURE

(51) International classification	:A61K 8/9728, A61K 9/00, A61Q 19/08, C08B 37/00, A61K 36/064	(71)**Name of Applicant :** **1)TISSUE REPAIR LTD** Address of Applicant :Level 10, 255 Pitt Street Sydney, New South Wales 2000, Australia Australia
(31) Priority Document No	:17/390,809	(72)**Name of Inventor :** **1)CHARARA, Anthony** **2)SHAW, Mark Deacon**
(32) Priority Date	:30/07/2021	
(33) Name of priority country	:U.S.A.	
(86) International Application No	:PCT/AU2022/050788	
Filing Date	:27/07/2022	
(87) International Publication No	: NA	
(61) Patent of Addition to Application Number	:NA	
Filing Date	:NA	
(62) Divisional to Application Number	:202427006532	
Filed on	:31/01/2024	

(57) Abstract :
ABSTRACT ISOLATED POLYSACCHARIDE COMPOUND AND METHOD OF USE AND MANUFACTURE Described herein is an isolated biological polysaccharide compound. The biological polysaccharide compound may be characterised by being isolated and having: glycosyl linkages comprising 1:3 linked glucopyranosyl residue of 65-95%wt and 1:6 linked glucopyranosyl residue of 5-25%wt; and a purity of 85- 100% β-glucan; and a molecular weight of 0.5 to 2.2MDa; and a TNF-alpha cytokine response in a human bioassay that is at least 1.5 times greater than a negative control TNF-alpha cytokine response in a human bioassay; and being essentially insoluble in aqueous solutions. In at least one embodiment, methods are described of treating skin by topical application of a vehicle containing the isolated biological polysaccharide to a skin site such as a wound or burn. A method of manufacture is also described.

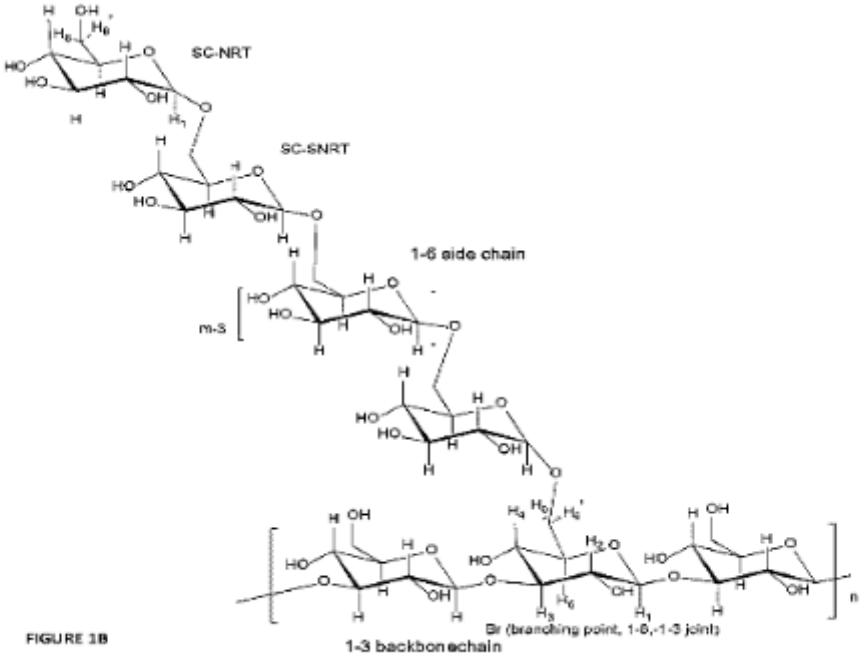

FIGURE 1B

No. of Pages : 78 No. of Claims : 17

(12) PATENT APPLICATION PUBLICATION
(19) INDIA
(22) Date of filing of Application :26/06/2025
(21) Application No.202528061304 A
(43) Publication Date : 07/11/2025

(54) Title of the invention : CHAIN OF AUTHENTICATION USING PUBLIC KEY INFRASTRUCTURE

(51) International classification	:H04L 9/32, H04L 9/08, H04L 9/00
(31) Priority Document No	:63/089,857
(32) Priority Date	:09/10/2020
(33) Name of priority country	:U.S.A.
(86) International Application No	:PCT/IB2021/000615
Filing Date	:10/09/2021
(87) International Publication No	: NA
(61) Patent of Addition to Application Number	:NA
Filing Date	:NA
(62) Divisional to Application Number	:202327026793
Filed on	:11/04/2023

(71)**Name of Applicant :**
1)CHOI, Unho
Address of Applicant :Kyonyoung APT 6-1104 Sombat-ro 229 Nowon-gu, Seoul 01776, Republic of Korea Republic of Korea
(72)**Name of Inventor :**
1)CHOI, Unho

(57) Abstract :
ABSTRACT CHAIN OF AUTHENTICATION USING PUBLIC KEY INFRASTRUCTURE A method for sequential authentication based on chain of authentication using public key infrastructure (PKI) is provided. The method includes receiving, by an nth party, an (n-1)th modified public key from an (n-1)th party; generating, by the nth party, an nth private key and an nth public key corresponding to each other; generating, by the nth party, an nth modified public key by concatenating the (n-1)th modified public key and the nth public key signed with the nth private key; and transmitting, by the #th party, the nth modified public key, where n is a natural number greater than 1, and when n=2, the first modified public key is the first public key signed with the first private key.

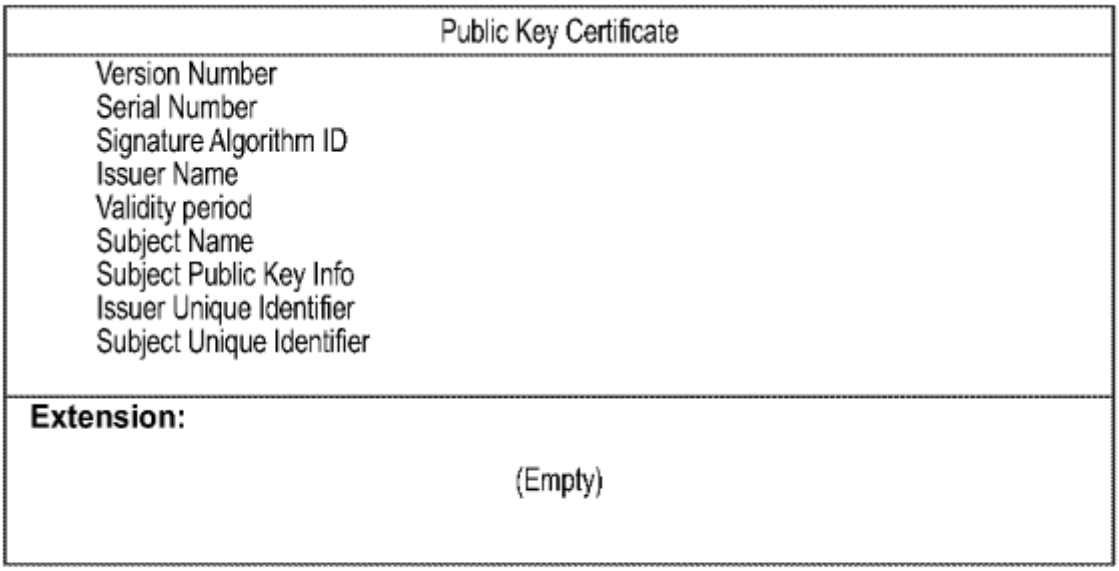

FIG. 1A

No. of Pages : 86 No. of Claims : 22

(12) PATENT APPLICATION PUBLICATION
(19) INDIA
(22) Date of filing of Application :23/07/2025
(21) Application No.202528070068 A
(43) Publication Date : 07/11/2025

(54) Title of the invention : COMMUNICATION APPARATUS AND COMMUNICATION METHOD FOR CONTROL SIGNALING

(51) International classification	:H04L 5/00, H04L 27/26, H04W 84/12
(31) Priority Document No	:10202000228Q
(32) Priority Date	:09/01/2020
(33) Name of priority country	:Singapore
(86) International Application No	:PCT/SG2020/050624
Filing Date	:30/10/2020
(87) International Publication No	: NA
(61) Patent of Addition to Application Number	:NA
Filing Date	:NA
(62) Divisional to Application Number	:202227039188
Filed on	:07/07/2022

(71)**Name of Applicant :**
1)PANASONIC INTELLECTUAL PROPERTY CORPORATION OF AMERICA
Address of Applicant :20000 Mariner Avenue, Suite 200 Torrance, California 90503, U.S.A. U.S.A.
(72)**Name of Inventor :**
1)Lei HUANG
2)Yoshio URABE
3)Rojan CHITRAKAR

(57) Abstract :
The present disclosure provides communication apparatus and communication method for control signaling. The communication apparatus comprises circuitry, which, in operation, generates a transmission signal comprising a first signal field which comprises a first part and a second part, each comprising an equal number of data bits, wherein the data bits of the second part of the first signal field does not comprise version independent bits; and a transmitter, which, in operation, transmit the generated transmission signal. Reference Fig. 3B

Figure of Abstract

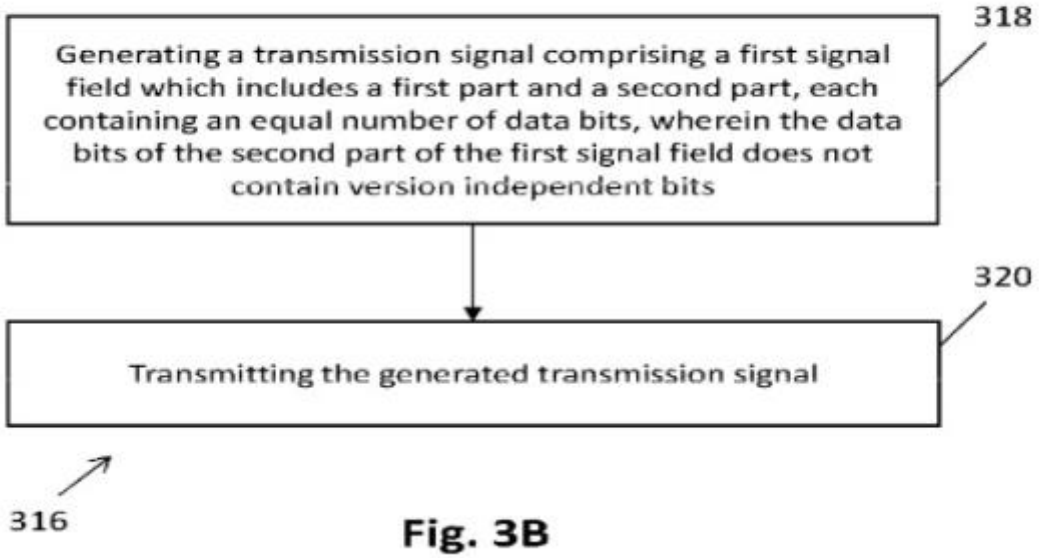

Fig. 3B

No. of Pages : 77 No. of Claims : 14

(12) PATENT APPLICATION PUBLICATION
(21) Application No.202527071576 A
(19) INDIA
(22) Date of filing of Application :28/07/2025
(43) Publication Date : 07/11/2025

(54) Title of the invention : ANTI PDL1 ANTIBODIES MULTISPECIFIC ANTIBODIES AND METHODS OF USE

(51) International classification	:C07K 16/46, C12N 15/13, A61K 39/395, A61P 35/00
(31) Priority Document No	:PCT/CN2022/143518
(32) Priority Date	:29/12/2022
(33) Name of priority country	:China
(86) International Application No	:PCT/CN2023/143112
Filing Date	:29/12/2023
(87) International Publication No	:WO 2024/140998
(61) Patent of Addition to Application Number	:NA
Filing Date	:NA
(62) Divisional to Application Number	:NA
Filing Date	:NA

(71)**Name of Applicant :**
1)SHANGHAI HENLIUS BIOTECH INC.
Address of Applicant :Room 330 Complex Building No. 222 Kangnan Road China (Shanghai) Pilot Free Trade Zone Pudong New Area Shanghai 201210 China
2)SHANGHAI HENLIUS BIOPHARMACEUTICAL CO. LTD.
3)SHANGHAI HENLIUS BIOLOGICS CO. LTD.
(72)**Name of Inventor :**
1)BARAL Toya
2)CHANG Jen Kuan
3)MUDA Marco
4)XU Wenfeng
5)JIANG Wei Dong
6)XUE Jie
7)LIN Pei Hua
8)ISSAFRAS Hassan

(57) Abstract :
Provided is a multispecific antibody that binds to PDL1 and CD47 useful for treating or preventing cancer. The multispecific antibody comprises a first antigen binding moiety comprising a single domain anti PDLI antibody and a second antigen binding moiety comprising an anti CD47 antibody.

No. of Pages : 99 No. of Claims : 36

(12) PATENT APPLICATION PUBLICATION
(21) Application No.202527072217 A
(19) INDIA
(22) Date of filing of Application :29/07/2025
(43) Publication Date : 07/11/2025

(54) Title of the invention : GUARD PLATE AND VEHICLE

(51) International classification	:B60R 13/08, B60L 3/00, B32B 27/20, B32B 15/00, B32B 15/08
(31) Priority Document No	:202211729452.4
(32) Priority Date	:30/12/2022
(33) Name of priority country	:China
(86) International Application No	:PCT/CN2023/143162
Filing Date	:29/12/2023
(87) International Publication No	:WO 2024/141006
(61) Patent of Addition to Application Number	:NA
Filing Date	:NA
(62) Divisional to Application Number	:NA
Filing Date	:NA

(71)**Name of Applicant :**
1)BYD COMPANY LIMITED
Address of Applicant :No. 3009 BYD Road Pingshan Shenzhen Guangdong 518118 China
(72)**Name of Inventor :**
1)WAN Long
2)LI Peng
3)PENG Qingbo
4)LU Zhipei
5)ZHU Yan

(57) Abstract :
A guard plate comprising: a metal plate; a glass fiber reinforced resin layer which comprises a first glass fiber reinforced resin layer and a second glass fiber reinforced resin layer the first glass fiber reinforced resin layer being located on one side of the metal plate and the second glass fiber reinforced resin layer being located on the side of the metal plate facing away from the first glass fiber reinforced resin layer; and a carbon fiber reinforced resin layer which comprises a first carbon fiber reinforced resin layer and a second carbon fiber reinforced resin layer the first carbon fiber reinforced resin layer being located on the side of the first glass fiber reinforced resin layer away from the metal plate and the second carbon fiber reinforced resin layer being located on the side of the second glass fiber reinforced resin layer away from the metal plate. The metal plate is sealed by the glass fiber reinforced resin layer and the carbon fiber reinforced resin layer; and the metal plate the glass fiber reinforced resin layer and the carbon fiber reinforced resin layer satisfy the following condition: Formula (1).

$$\frac{d_2}{d_0+d_1+d_2} * \frac{\rho_2}{\rho_0+\rho_1+\rho_2} * \frac{\sigma_2}{\sigma_0+\sigma_1+\sigma_2} > 0.046 \quad (1)$$

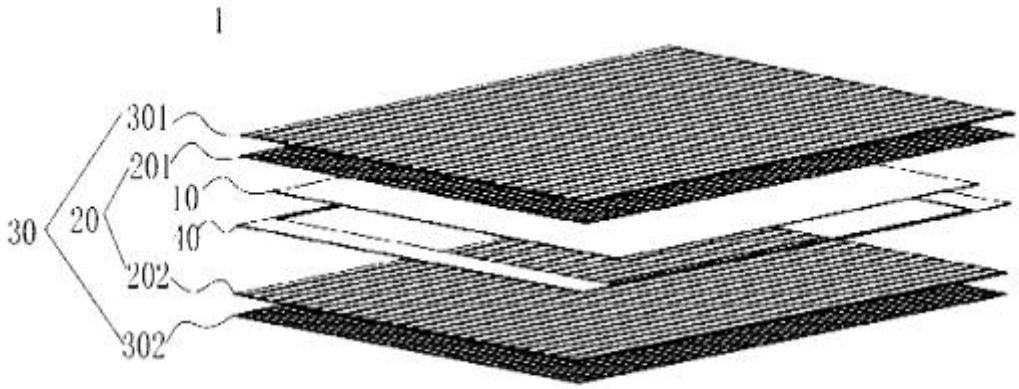

图 1

No. of Pages : 20 No. of Claims : 12

(12) PATENT APPLICATION PUBLICATION
(21) Application No.202527072312 A
(19) INDIA
(22) Date of filing of Application :30/07/2025
(43) Publication Date : 07/11/2025

(54) Title of the invention : SOLID ELECTROLYTE SOLID STATE BATTERY AND ELECTRICAL APPARATUS

(51) International classification :H01M 10/0562
(31) Priority Document No :202211742332.8
(32) Priority Date :30/12/2022
(33) Name of priority country :China
(86) International Application No :PCT/CN2023/143106
Filing Date :29/12/2023
(87) International Publication No :WO 2024/140995
(61) Patent of Addition to Application Number :NA
Filing Date :NA
(62) Divisional to Application Number :NA
Filing Date :NA

(71)**Name of Applicant :**
1)BYD COMPANY LIMITED
Address of Applicant :No. 3009 BYD Road Pingshan Shenzhen Guangdong 518118 China
(72)**Name of Inventor :**
1)SHI Zhuo
2)WANG Guoshuai
3)FU Haoyu
4)GUO Zizhu

(57) Abstract :
A solid electrolyte comprising a first solid electrolyte layer and a second solid electrolyte layer. The first solid electrolyte layer comprises a first sulfide solid electrolyte and the second solid electrolyte layer comprises a phosphide solid electrolyte.

No. of Pages : 25 No. of Claims : 20

(12) PATENT APPLICATION PUBLICATION
(21) Application No.202527074286 A
(19) INDIA
(22) Date of filing of Application :05/08/2025
(43) Publication Date : 07/11/2025

(54) Title of the invention : POWER ASSEMBLY AND VEHICLE HAVING SAME

(51) International classification :B60K 1/02
(31) Priority Document No :202310020332.5
(32) Priority Date :05/01/2023
(33) Name of priority country :China
(86) International Application No :PCT/CN2023/142786
Filing Date :28/12/2023
(87) International Publication No :WO 2024/146441
(61) Patent of Addition to Application Number :NA
Filing Date :NA
(62) Divisional to Application Number :NA
Filing Date :NA

(71)**Name of Applicant :**
1)BYD COMPANY LIMITED
Address of Applicant :No. 3009, BYD Road, Pingshan Shenzhen, Guangdong 518118 China
(72)**Name of Inventor :**
1)YANG, Shenglin
2)CHEN, Yong
3)GAO, Yuan
4)ZHANG, Hongming
5)WANG, Kuncheng
6)LU, Guoxiang

(57) Abstract :
A power assembly and a vehicle having same. The power assembly comprises a middle box (1), a motor controller (2), and a system functional member. Two first electric control mounting bases (12) extending outwards are arranged on the middle box (1), the two first electric control mounting bases (12) are connected to the bottom surface of the motor controller (2), and an accommodating space is defined between the outer wall surface of the middle box (1), the bottom surface of the motor controller (2) and the two first electric control mounting bases (12). At least part of the system functional part is arranged in the accommodating space.

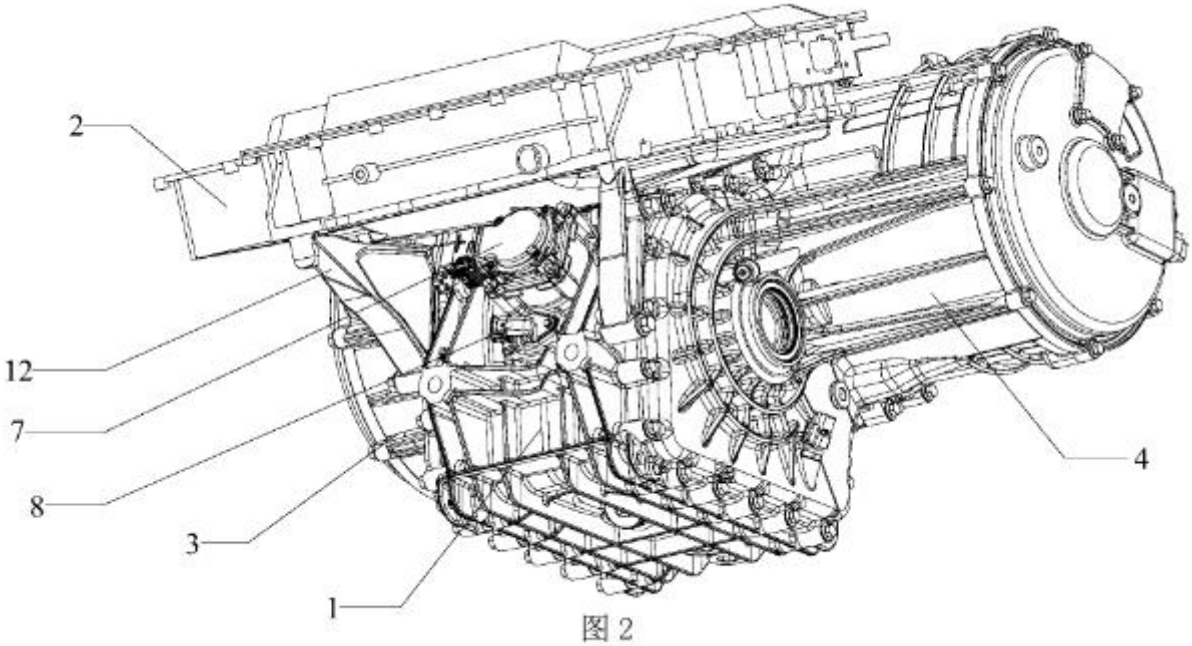

图 2

No. of Pages : 20 No. of Claims : 32

(12) PATENT APPLICATION PUBLICATION
(19) INDIA
(22) Date of filing of Application :16/07/2025
(21) Application No.202527067674 A
(43) Publication Date : 07/11/2025

(54) Title of the invention : POWER COUPLING DEVICE, POWER ASSEMBLY AND VEHICLE

(51) International classification	:F16D 23/12, F16D 11/04
(31) Priority Document No	:202310013984.6
(32) Priority Date	:05/01/2023
(33) Name of priority country	:China
(86) International Application No	:PCT/CN2023/124970
Filing Date	:17/10/2023
(87) International Publication No	:WO 2024/146205
(61) Patent of Addition to Application Number	:NA
Filing Date	:NA
(62) Divisional to Application Number	:NA
Filing Date	:NA

(71)**Name of Applicant :**
1)BYD COMPANY LIMITED
Address of Applicant :No. 3009, BYD Road, Pingshan Shenzhen, Guangdong 518118 China
(72)**Name of Inventor :**
1)YANG, Shenglin
2)GAO, Yuan
3)CHEN, Yong
4)ZHANG, Hongming
5)XIE, Lihua

(57) Abstract :
A power coupling device (1000), a power assembly (2000) and a vehicle (3000). The power coupling device comprises a driving assembly (200), a coupling member (400), an elastic member (300), a first power assembly (110), and a second power assembly (120). Two ends of the elastic member (300) are respectively fitted with the driving assembly (200) and the coupling member (400), and the first power assembly (110) is in normal transmission connection with the coupling member (400). When the power coupling device is in a coupled state, the second power assembly (120) and the coupling member (400) are in transmission connection. When the power coupling device is in a decoupled state, the second power assembly (120) and the coupling member (400) are disconnected from each other. The driving assembly drives the elastic member (300) so as to drive the coupling member (400), such that the power coupling device switches from the decoupled state to the coupled state.

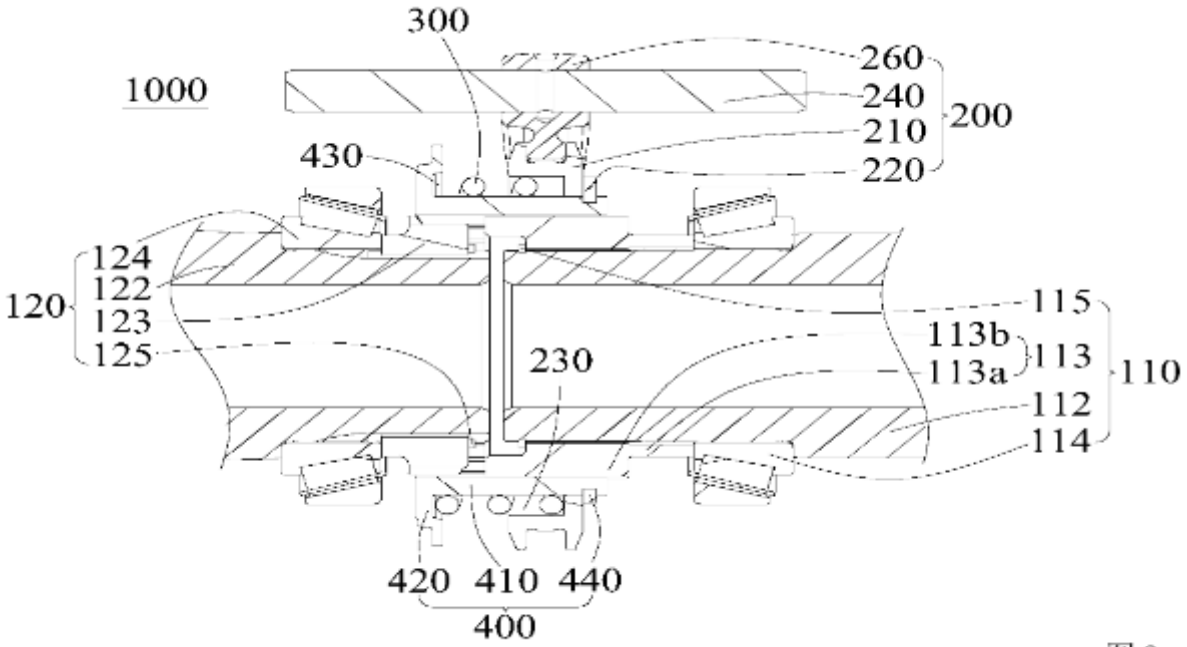

图 3

No. of Pages : 13 No. of Claims : 10

(12) PATENT APPLICATION PUBLICATION
(21) Application No.202527083036 A
(19) INDIA
(22) Date of filing of Application :01/09/2025
(43) Publication Date : 07/11/2025

(54) Title of the invention : STABLE PROTEIN COMPOSITIONS OF ANTI-PD1 ANTIBODY

(51) International classification	:C07K 16/28, A61K 39/395, A61K 47/00
(31) Priority Document No	:202321010367
(32) Priority Date	:16/02/2023
(33) Name of priority country	:India
(86) International Application No	:PCT/IB2024/051388
Filing Date	:14/02/2024
(87) International Publication No	:WO 2024/171082
(61) Patent of Addition to Application Number	:NA
Filing Date	:NA
(62) Divisional to Application Number	:NA
Filing Date	:NA

(71)**Name of Applicant :**
1)SUN PHARMACEUTICAL INDUSTRIES LIMITED
Address of Applicant :Sun House, Plot No. 201 B/1, Western Express Highway, Goregaon (E) Mumbai, Maharashtra 400 063 India
(72)**Name of Inventor :**
1)SHAH, Bhavik Kumar
2)SHARMA, Manish
3)JOGANI, Viralkumar Vinodlal
4)KHOPADE, Ajay Jaysingh
5)NAGARAJA, Ravishankara Madavati
6)CHOUHAN, Pankaj Singh

(57) Abstract :
The invention relates to stable compositions of an antibody against human programmed death receptor PD-1, or antigen binding fragments thereof. The invention further provides methods for treating various cancers with stable formulations of the invention. The present invention relates to pharmaceutical compositions of an anti-PD1 antibody comprising a buffer, a sugar or sugar alcohol and a surfactant. In some embodiments of the invention, the formulations may be administered to a subject by intravenous or subcutaneous administration.

No. of Pages : 35 No. of Claims : 34

(12) PATENT APPLICATION PUBLICATION
(21) Application No.202528104315 A
(19) INDIA
(22) Date of filing of Application :29/10/2025
(43) Publication Date : 07/11/2025

(54) Title of the invention : MULTI-CHANNEL SIGNAL ENCODING AND DECODING METHOD AND CODEC

(51) International classification	:G10L 19/04, H04S 5/00
(31) Priority Document No	:201710205821.2
(32) Priority Date	:31/03/2017
(33) Name of priority country	:China
(86) International Application No	:PCT/CN2018/077782
Filing Date	:01/03/2018
(87) International Publication No	: NA
(61) Patent of Addition to Application Number	:NA
Filing Date	:NA
(62) Divisional to Application Number	:201927038102
Filed on	:01/03/2018

(71)**Name of Applicant :**
1)HUAWEI TECHNOLOGIES CO., LTD.
Address of Applicant :Huawei Administration Building, Bantian, Longgang, Shenzhen, Guangdong Province 518129, China China
(72)**Name of Inventor :**
1)LIU, Zexin
2)MIAO, Lei

(57) Abstract :
A multi-channel signal encoding method, a multi-channel signal decoding method, an encoder, and a decoder are provided. The encoding method includes: determining (310) a downmixed signal of a first channel signal and a second channel signal in a multi-channel signal, an initial reverberation gain parameter of the first channel signal and the second channel signal; determining (320) a target reverberation gain parameter of the first channel signal and the second channel signal based on a correlation between the first channel signal and the downmixed signal, a correlation between the second channel signal and the downmixed signal, and the initial reverberation gain parameter; and quantizing (330) the first channel signal and the second channel signal based on the downmixed signal and the target reverberation gain parameter, and writing a quantized first channel signal and a quantized second channel signal into a bitstream. Quality of a channel signal obtained after reverberation processing can be improved according to the encoding method, the decoding method, the encoder, and the decoder. FIG. 3

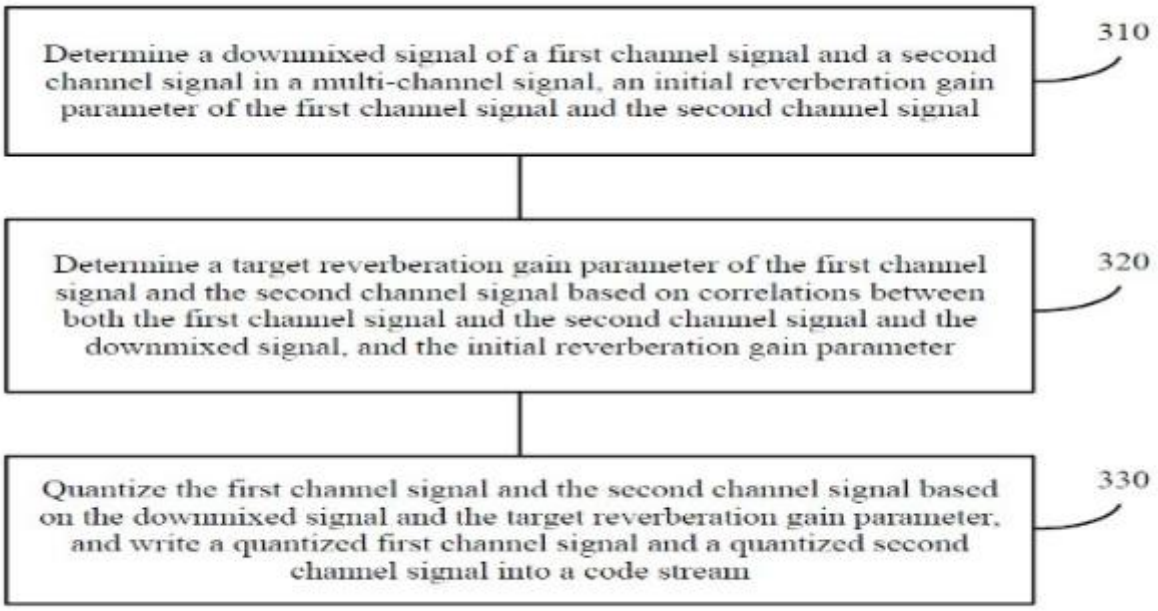

FIG. 3

No. of Pages : 74 No. of Claims : 3

(12) PATENT APPLICATION PUBLICATION
(21) Application No.202441034562 A
(19) INDIA
(22) Date of filing of Application :01/05/2024
(43) Publication Date : 07/11/2025

(54) Title of the invention : METHOD AND SYSTEM FOR IMPROVING BOOT PROCESS OF A MEMORY USING ENHANCED DFE TRAINING TECHNIQUE

(51) International classification	:H04L0025030000, G06F0009440100, H04W0024020000, G06F0016280000, H04B0001120000
(31) Priority Document No	:NA
(32) Priority Date	:NA
(33) Name of priority country	:NA
(86) International Application No	:NA
Filing Date	:NA
(87) International Publication No	: NA
(61) Patent of Addition to Application Number	:NA
Filing Date	:NA
(62) Divisional to Application Number	:NA
Filing Date	:NA

(71)**Name of Applicant :**
1)SAMSUNG ELECTRONICS CO., LTD.
Address of Applicant :129, Samsung-ro, Yeongtong-gu, Suwon-si, Gyeonggi-do, 443-742, Republic of Korea Republic of Korea
(72)**Name of Inventor :**
1)Abhinav Arora
2)Aayushi Chauhan
3)Afreen Shaik
4)Gabriel Cho

(57) Abstract :
METHOD AND SYSTEM FOR IMPROVING BOOT PROCESS OF A MEMORY USING ENHANCED DFE TRAINING TECHNIQUE In the present disclosure, techniques for improving a boot process of a memory (122) using an enhanced Decision Feedback Equalizer (DFE) training technique are described. The method (200) comprises step (a) of predicting (202) DFE tap values based on memory configuration parameters. The method (200) further comprises step (b) of determining (204) accuracy level of predicted DFE tap values by comparing predicted DFE tap values with optimal DFE tap values. Furter, the method comprises step (c) of determining when accuracy level exceeds an accuracy threshold value, then setting a prediction flag as TRUE, storing predicted DFE tap values after validating a plurality of eye margins; and performing subsequent boot process of the memory using the predicted DFE tap values. The method further comprises step (c) of determining when accuracy level is below the accuracy threshold value, setting the prediction flag as FALSE, and repeating the above steps until the prediction flag is set as TRUE. [Fig 2]

No. of Pages : 22 No. of Claims : 10

(12) PATENT APPLICATION PUBLICATION
(21) Application No.202441034604 A
(19) INDIA
(22) Date of filing of Application :01/05/2024
(43) Publication Date : 07/11/2025

(54) Title of the invention : FIBRE OPTICS INTEGRATED COMPACT SOLAR ENERGY HARVESTING SYSTEM

(51) International classification	:H02S40/22, H02J7/35
(31) Priority Document No	:NA
(32) Priority Date	:NA
(33) Name of priority country	:NA
(86) International Application No	:NA
Filing Date	:NA
(87) International Publication No	: NA
(61) Patent of Addition to Application Number	:NA
Filing Date	:NA
(62) Divisional to Application Number	:NA
Filing Date	:NA

(71)**Name of Applicant :**
1)Vidyastee
Address of Applicant :No. 533, RWD Elysium Appartment, Madha Kovil Street, Kelambakkam, Chennai Tamil Nadu India
(72)**Name of Inventor :**
1)Vidyastee

(57) Abstract :
The proposed compact solar power harvesting system integrates PV panels, optical fibers, and a converging mechanism to enhance efficiency without requiring outer transparent protection cover and also to reduce the overall space requirement. Converging unit focus solar rays into smaller areas of focus plane connector, which eliminating the need for larger surface area and solar source tracking systems. The optical fibres are connected with this focus plane connector through which focused solar rays are transmitted to the PV array through Array panel terminal connectors, where transmitted rays are flashed onto PV panels. These fibres connect to the closed structure at angular intervals, ensuring uniform distribution of concentrated light on PV panels thereby significantly reducing surface requirements compared to conventional solar panels. The array of PV panels with gap separator acts like a closed airtight structure, which prevents dust or dirt infiltration and leak of incoming solar rays. With this proposed structure, advantages include improved watt per square meter due to the layered arrangement of PV Panels, reduced internal reflection, and decreased maintenance costs by limiting dust deposition. Overall, this system represents a holistic approach to solar power harvesting, providing both structural and functional improvements over traditional PV panel systems in terms of decreasing surface area requirement, minimizing the loss due to internal reflections in the PV panel, controlling the PV panel temperature by elimination thermal source at root and ultimately reduce the overall maintenance cost of the system by eliminating the cleaning requirements.

No. of Pages : 17 No. of Claims : 9

(12) PATENT APPLICATION PUBLICATION
(21) Application No.202441034669 A
(19) INDIA
(22) Date of filing of Application :01/05/2024
(43) Publication Date : 07/11/2025

(54) Title of the invention : A TWO WHEELED VEHICLE

(51) International classification	:B62J11/00, B62J11/24, B62J9/00, B62J9/14, B62K19/46	(71)**Name of Applicant :** **1)TVS Motor Company Limited,** Address of Applicant :TVS Motor Company Limited, “Chaitanya”, No.12 Khader Nawaz Khan Road, Nungambakkam, Chennai Chennai Tamil Nadu India
(31) Priority Document No	:NA	(72)**Name of Inventor :** **1)AMIT DILIP RAJWADE**
(32) Priority Date	:NA	**2)KIRAN PAYANGAPPADAN**
(33) Name of priority country	:NA	**3)CLYDE BOSCO DSILVA**
(86) International Application No	:NA	**4)SELVARAJ PRADEEP**
Filing Date	:NA	**5)APPANNA NADAGERAPPA PUJARI**
(87) International Publication No	: NA	
(61) Patent of Addition to Application Number	:NA	
Filing Date	:NA	
(62) Divisional to Application Number	:NA	
Filing Date	:NA	

(57) Abstract :
The present invention introduces a versatile storage solution designed to address the challenges faced by users of two-wheeled vehicles in securely transporting belongings. The invention comprises an additional storage box positioned beneath the hingedly openable seat of the vehicle, offering ample space to accommodate helmets and other essential items. The storage box features a two-piece construction, including a bottom compartment and a hinged lid equipped with a lockable mechanism to ensure the safety of stored belongings. Furthermore, the innovative design allows for easy docking of the storage box on the vehicle's floorboard using a coiling steel cable, providing added security during parking. With its practical features and adaptable design, the invention offers users a comprehensive storage solution that enhances convenience, security, and peace of mind while traveling on two-wheeled vehicles.

No. of Pages : 32 No. of Claims : 22

(12) PATENT APPLICATION PUBLICATION
(21) Application No.202441034771 A
(19) INDIA
(22) Date of filing of Application :02/05/2024
(43) Publication Date : 07/11/2025

(54) Title of the invention : BIOANALYTICAL METHOD AND SYSTEM FOR QUANTIFYING MOLNUPIRAVIR IN BIOLOGICAL SAMPLE

(51) International classification	:G01N0033680000, G01N0030020000, G01N0030720000, G01N0030880000, G01N0030340000
(31) Priority Document No	:NA
(32) Priority Date	:NA
(33) Name of priority country	:NA
(86) International Application No	:NA
Filing Date	:NA
(87) International Publication No	: NA
(61) Patent of Addition to Application Number	:NA
Filing Date	:NA
(62) Divisional to Application Number	:NA
Filing Date	:NA

(71)**Name of Applicant :**
1)Dr. K. Bhavyasri
Address of Applicant :Associate Professor and Head Department of Pharmaceutical Analysis, RBVRR women's college of Pharmacy, barkatpura, Hyderabad Hyderabad Telangana India
2)Sanjeeva Reddy Chinnakadoori
3)Sudha Divya Madhuri Kallam
4)Anoop Bodapati
5)Phanikumar Reddy Satti
6)Bhaskar vallamkonda
7)Mylsamy Palanisamy
8)Venkata Lakshamana Sagar Dantinapalli
9)Selvaraj Elumalai
(72)**Name of Inventor :**
1)Dr. K. Bhavyasri
2)Sanjeeva Reddy Chinnakadoori
3)Sudha Divya Madhuri Kallam
4)Anoop Bodapati
5)Phanikumar Reddy Satti
6)Bhaskar vallamkonda
7)Mylsamy Palanisamy
8)Venkata Lakshamana Sagar Dantinapalli
9)Selvaraj Elumalai

(57) Abstract :
ABSTRACT BIOANALYTICAL METHOD AND SYSTEM FOR QUANTIFYING MOLNUPIRAVIR IN BIOLOGICAL SAMPLE The present invention related to a bioanalytical method and system for quantifying Molnupiravir in biological samples, particularly rat plasma, using liquid chromatography coupled with tandem mass spectrometry (LC-MS/MS). The method involves liquid-liquid extraction (LLE) of Molnupiravir and utilization of D7-Molnupiravir as an internal standard (IS). A Phenyl column with a specific mobile phase composition is employed for drug separation. Positive mode multiple reaction monitoring (MRM) enables simultaneous detection of Molnupiravir and D7-Molnupiravir. The method demonstrates high selectivity, specificity, linearity, precision, accuracy, and stability under various conditions, meeting regulatory standards. This novel approach offers a rapid, efficient, and reliable means for quantifying Molnupiravir in biological samples, facilitating pharmacokinetic studies and therapeutic monitoring.

No. of Pages : 20 No. of Claims : 7

(12) PATENT APPLICATION PUBLICATION
(21) Application No.202441034804 A
(19) INDIA
(22) Date of filing of Application :02/05/2024
(43) Publication Date : 07/11/2025

(54) Title of the invention : INCORPORATING DIGITAL CERTIFICATES IN SMART WEARABLE DEVICES

(51) International classification	:H04L0009320000, G06Q0020360000, G06Q0020320000, G06F0001320600, G06F0003010000
(31) Priority Document No	:NA
(32) Priority Date	:NA
(33) Name of priority country	:NA
(86) International Application No	:NA
Filing Date	:NA
(87) International Publication No	: NA
(61) Patent of Addition to Application Number	:NA
Filing Date	:NA
(62) Divisional to Application Number	:NA
Filing Date	:NA

(71)**Name of Applicant :**
1)DIGICERT, INC.
Address of Applicant :2801 North Thanksgiving Way, Suite 500, Lehi, UT 84043, USA U.S.A.
(72)**Name of Inventor :**
1)Supratik Mondal
2)Avesta Hojjati

(57) Abstract :
Systems and methods are provided for establishing a trust framework with respect to smart wearable devices. In one implementation, a smart wearable device (16) includes memory (74) configured to store one or more certificates (84) issued by a Certificate Authority (CA) (14), wherein the one or more certificates (84) enable a user of the smart wearable device (16) to digitally verify his or her identity for performing a security-based action. The smart wearable device (16) further includes a Near Field Communication (NFC) device (76) configured to wirelessly link with a security terminal (24, 26) to perform the security-based action when the identity of the user is verified. FIG. 1

No. of Pages : 46 No. of Claims : 10

(12) PATENT APPLICATION PUBLICATION

(21) Application No.202441034806 A

(19) INDIA

(22) Date of filing of Application :02/05/2024

(43) Publication Date : 07/11/2025

(54) Title of the invention : SMOOTH SAILING WITH IONIC PLASMA THRUSTER

(51) International classification	:B64G0001260000, F03H0001000000, B63H0021170000, B63B0025000000, B63H0021140000	(71)**Name of Applicant :**
(31) Priority Document No	:NA	**1)J.RAMADOSS**
(32) Priority Date	:NA	Address of Applicant :32 APJ HOMES ALAGESAN NAGER KOLAPAKAM, KOLAPAKKAM, Chennai, Tamilnadu, India. Pin code-500043. Tamil Nadu India
(33) Name of priority country	:NA	**2)Arokiadoss prabhakaran L**
(86) International Application No	:NA	**3)Nilhish Kannan**
Filing Date	:NA	**4)Selvakumar**
(87) International Publication No	: NA	**5)Vipulson AJ**
(61) Patent of Addition to Application Number	:NA	(72)**Name of Inventor :**
Filing Date	:NA	**1)J.RAMADOSS**
(62) Divisional to Application Number	:NA	**2)Arokiadoss prabhakaran L**
Filing Date	:NA	**3)Nilhish Kannan**
		4)Selvakumar
		5)Vipulson AJ

(57) Abstract :

Abstract:- This explores the application of ionic thrusters in the context of recreational boating. Ionic thrusters, known for their efficiency in space exploration, are adapted for use in small boats, providing an coo—friendly alternative to conventional firopulsion systems. The study outlines the basic principles of ionic thrusters and their potential benefits for boating enthusiasts, including reduced environmental impact, enhanced energy efficiency, and a quieter: smoother ride. By introducing this innovative technology to the boating community, the paper aims to spark interest and discussion around sustainable propulsion options for small watercraft. Keywords:- propulsion systems,boating community,enhanced energy efficiency

No. of Pages : 12 No. of Claims : 3

(12) PATENT APPLICATION PUBLICATION
(21) Application No.202441034829 A
(19) INDIA
(22) Date of filing of Application :02/05/2024
(43) Publication Date : 07/11/2025

(54) Title of the invention : A PROCESS OF RAPID, INNOVATIVE AND HIGH YIELD GRAPHENE QUANTUM DOTS SYNTHESIS BY MICROWAVE PYROLYSIS

(51) International classification	:B82Y30/00, C01B32/184, C01B32/196, B82Y40/00, C09K11/65
(31) Priority Document No	:NA
(32) Priority Date	:NA
(33) Name of priority country	:NA
(86) International Application No	:NA
Filing Date	:NA
(87) International Publication No	: NA
(61) Patent of Addition to Application Number	:NA
Filing Date	:NA
(62) Divisional to Application Number	:NA
Filing Date	:NA

(71)**Name of Applicant :**
1)KOTHARI SUGARS AND CHEMICALS LTD
Address of Applicant :KOTHARI BUILDINGS, 115 MAHATMA GANDHI ROAD, NUNGAMBAKKAM, CHENNAI CHENNAI TAMIL NADU INDIA 600034 Chennai Tamil Nadu India
(72)**Name of Inventor :**
1)MR. MOHAMED KILLEBBAI MEERAN
2)MR. AKASH KUMAR
3)DR. ALBIN JOHN PUTHUSSERY PAUL WINSTON
4)MR. ARJUN BHADRASHYAM KOTHARI
5)MR. SILVESTER GOLDWIN MARIATHANGAM
6)DR. JOHN JUDITH VIJAYA
7)DR. PAPPU SAGAYARAJ
8)DR. RAMALINGAM RAVINDHRAN
9)DR. JOSEPH MADHAVAN
10)DR. SAVARIAPPAN AMALA JAYANTHI

(57) Abstract :
TITLE: A PROCESS OF RAPID, INNOVATIVE AND HIGH YIELD GRAPHENE QUANTUM DOTS SYNTHESIS BY MICROWAVE PYROLYSIS
APPLICANT: KOTHARI SUGARS AND CHEMICALS LTD ABSTRACT The present invention discloses a process of synthesis of graphene quantum dots from sugarcane bagasse or sugarcane bagasse pith comprises of following steps; a. carbonizing dried and powdered sugarcane bagasse or sugarcane bagasse pith to form carbonized substance; b. dissolving citric acid in deionized water followed by adding the carbonized substance to form a solution; c. sonicating the solution to form a mixture; d. subjecting the mixture to microwave pyrolysis followed by filtration and dialysis to obtain graphene quantum dots. The present invention also a graphene quantum dots prepared by the process as described above.

No. of Pages : 26 No. of Claims : 4

(12) PATENT APPLICATION PUBLICATION
(21) Application No.202441034876 A
(19) INDIA
(22) Date of filing of Application :02/05/2024
(43) Publication Date : 07/11/2025

(54) Title of the invention : KALAKSHETRA MUTTUKATTAM SILK SAREE

(51) International classification	:A41D 1/22
(31) Priority Document No	:NA
(32) Priority Date	:NA
(33) Name of priority country	:NA
(86) International Application No	:NA
Filing Date	:NA
(87) International Publication No	: NA
(61) Patent of Addition to Application Number	:NA
Filing Date	:NA
(62) Divisional to Application Number	:NA
Filing Date	:NA

(71)**Name of Applicant :**
1)KALAKSHETRA FOUNDATION
Address of Applicant :THIRUVANMIYUR, CHENNAI Chennai Tamil Nadu India
(72)**Name of Inventor :**
1)KALAKSHETRA FOUNDATION

(57) Abstract :
The silk saree produced by Kalakshetra Foundation, popularly known as Kalakshetra Muttukattam Silk Saree with golden orange and zari muttukattam, and olive green checks with Killu mundi which indicates that the body designs are not continued in the Thalappu (pallu). The 6-meter silk saree has a one inch zari muttukattam with green checks in the body. The saree has warp of golden orange and green for checks, and arakku weft for muttukattam with zari. The Thalappu has designs of set seer, a row of horse with a rider, muttu kamalam, row of elephants, tiger paws design with a kodi in centre and zari reeku. Border: 10 inches The border has orange warp, with green seer line and arakku back ground. The border is self-border with kamalam, vanki and neli with pagudi designs. The Zari design on the border are woven with extra redsilk in the weft, to outline pattern Thalappu: 39 inches The thalappu has warp orange and arakku weft will killu pallu. The designs are horse and rider – 3.5 inches, Muttu seer kamalam – 1.5 inches, Elephant - 2.5 inch, Kamalam kodi – 2.5, and Reku – 6 inches

No. of Pages : 13 No. of Claims : 1

(12) PATENT APPLICATION PUBLICATION
(21) Application No.202441034878 A
(19) INDIA
(22) Date of filing of Application :02/05/2024
(43) Publication Date : 07/11/2025

(54) Title of the invention : OXYBENZONE ANALOGS AND PREPARATION THEREOF

(51) International classification	: A61K8/35, A61K8/02, A61K8/22, A61K8/26, A61K8/27, A61K8/29, A61K49/18, B82Y5/00	
(31) Priority Document No	:NA	
(32) Priority Date	:NA	
(33) Name of priority country	:NA	
(86) International Application No	:NA	
Filing Date	:NA	
(87) International Publication No	: NA	
(61) Patent of Addition to Application Number	:NA	
Filing Date	:NA	
(62) Divisional to Application Number	:NA	
Filing Date	:NA	

(71)**Name of Applicant :**
1)Goreti Rajendar
Address of Applicant :2204, School of Chemistry Kerala India
2)Indian Institute of Science Education and Research, Thiruvananthapuram
(72)**Name of Inventor :**
1)Goreti Rajendar
2)Keerthana
3)Sowbarnika Senthil

(57) Abstract :
The present invention relates to the preparation of photoprotective oxybenzone analogs namely 4-alkoxy/aryloxy/acyloxy-2-hydroxy arylketones and 4-thioalkoxy/thioaryloxy-2-hydroxy arylketones and development of a novel process for preparation thereof. More particularly, present invention relates to a series of new analogs of oxybenzone prepared from 1,3-cyclohexadione using a novel process. The Process consisting of a vinylogous ester derived from 1,3-cyclohexadione, underwent sequential acylation and oxidative aromatization in a one-pot, resulting in variously protected 6-acyl resorcinols/phenols. Additionally, the process has been adopted for vinylogous thioesters, yielding 6-acyl 3-thio phenol derivatives.

No. of Pages : 23 No. of Claims : 8

(12) PATENT APPLICATION PUBLICATION
(21) Application No.202441034930 A
(19) INDIA
(22) Date of filing of Application :02/05/2024
(43) Publication Date : 07/11/2025

(54) Title of the invention : AN IMPROVED PROCESS FOR THE PREPARATION OF RESMETIROM FORM I

(51) International classification	:C07D403/12, A61K31/501, A61P1/16, A61P3/00
(31) Priority Document No	:NA
(32) Priority Date	:NA
(33) Name of priority country	:NA
(86) International Application No	:NA
Filing Date	:NA
(87) International Publication No	: NA
(61) Patent of Addition to Application Number	:NA
Filing Date	:NA
(62) Divisional to Application Number	:NA
Filing Date	:NA

(71)**Name of Applicant :**
1)LEE PHARMA LIMITED
Address of Applicant :Sy. No: 257 & 258/1; Door No: 11-6/56-C; Opp: IDPL Factory; Moosapet; Balanagar (Post), Hyderabad, Telangana, India 500037 patfiling@ipropat.com padmaja@ipropat.com + 91 8978561329 Telangana India
(72)**Name of Inventor :**
1)Raghu Mitra ALLA
2)Nagulu Meera SHAIK
3)Sampath Kumar SANKINENI
4)Govinda Reddy EDA

(57) Abstract :
ABSTRACT AN IMPROVED PROCESS FOR THE PREPARATION OF RESMETIROM FORM I The present invention relates to an improved process for the preparation of Resmetirom Crystalline Form I. The present invention relates to an improved process for the preparation of Resmetirom Crystalline Form I free from other solid state forms and stable over shelf life and does not convert into any other solid state forms.

No. of Pages : 26 No. of Claims : 4

(12) PATENT APPLICATION PUBLICATION
(21) Application No.202441034976 A
(19) INDIA
(22) Date of filing of Application :02/05/2024
(43) Publication Date : 07/11/2025

(54) Title of the invention : LUBRICANT COMPOSITION AND A PROCESS FOR ITS PREPARATION

(51) International classification	:C10M105/34, C10M111/04, C10M105/34, C10M107/30, C10M155/02, C10M169/04
(31) Priority Document No	:NA
(32) Priority Date	:NA
(33) Name of priority country	:NA
(86) International Application No	:NA
Filing Date	:NA
(87) International Publication No	: NA
(61) Patent of Addition to Application Number	:NA
Filing Date	:NA
(62) Divisional to Application Number	:NA
Filing Date	:NA

(71)**Name of Applicant :**
1)KLÜBER LUBRICATION INDIA PVT. LTD.
Address of Applicant :3rd Floor, Silver Jubilee Block 3rd Cross, Mission Rd, Bangalore-560027, Karnataka, India Bangalore Karnataka India
(72)**Name of Inventor :**
1)SATHEESH KUMAR MADDUR NAGARAJU
2)POOJA JYOTI CHANDRASHEKAR
3)AGUINALDO JOSÉ SIBINEL

(57) Abstract :
ABSTRACT LUBRICANT COMPOSITION AND A PROCESS FOR ITS PREPARATION The present disclosure relates to a lubricant composition and a process for its preparation. The lubricant composition provides improved shear viscosity, VKA weld load, wear scar property, and FZG ((Forschungsstelle fur Zahnrader und Getriebebau) test. The process of the present disclosure is simple and economical.

No. of Pages : 26 No. of Claims : 18

(12) PATENT APPLICATION PUBLICATION
(21) Application No.202441034988 A
(19) INDIA
(22) Date of filing of Application :02/05/2024
(43) Publication Date : 07/11/2025

(54) Title of the invention : METHODS AND SYSTEMS FOR DISCOVERING ONE OR MORE EDGE APPLICATION SERVERS

(51) International classification	:G06F0009500000, H04W0004000000, H04W0008000000, H04L0067550000, H04L0067510000
(31) Priority Document No	:NA
(32) Priority Date	:NA
(33) Name of priority country	:NA
(86) International Application No	:NA
Filing Date	:NA
(87) International Publication No	: NA
(61) Patent of Addition to Application Number	:NA
Filing Date	:NA
(62) Divisional to Application Number	:NA
Filing Date	:NA

(71)**Name of Applicant :**
1)Samsung Electronics Co., Ltd.
Address of Applicant :129, Samsung-ro, Yeongtong-gu, Suwon-si, Gyeonggi-do, 16677, Republic of Korea Republic of Korea
(72)**Name of Inventor :**
1)SHAH, Sapan Pramodkumar
2)RAMAMOORTHY, Arunprasath
3)TANGUDU, Narendranath Durga
4)PATTAN, Basavaraj Jayawant

(57) Abstract :
The present disclosure discloses techniques for discovering one or more Edge Application Servers (EASs). The method includes receiving a discovery request for discovering the one or more EASs corresponding to an application. The discovery request includes an Application Client (AC) profile indicating a list of associated devices. The AC and the at least one EEC are associated with a user device. The method further includes identifying the one or more EASs based on the list of associated devices received in the discovery request and one or more AS profiles associated with the one or more EASs. Each of the one or more AS profiles indicates a list of required associated devices for corresponding EAS. The method also includes providing information associated with the one or more identified EASs in a list of discovered EASs to the at least one EEC. [FIG. 6]

No. of Pages : 43 No. of Claims : 22

(12) PATENT APPLICATION PUBLICATION
(21) Application No.202441035009 A
(19) INDIA
(22) Date of filing of Application :02/05/2024
(43) Publication Date : 07/11/2025

(54) Title of the invention : "AN OPTICAL DEVICE FOR DETERMINING OPTICAL POWER OF A HUMAN EYE"

(51) International classification	:H04B0010079000, G01M0011000000, G02B0027480000, A61B0003103000, G02B0027010000	(71)**Name of Applicant :** **1)TITAN COMPANY LIMITED** Address of Applicant :Integrity No.193, Veerasandra, Electronics City P.O., Off Hosur Main Road, Bangalore – 560100, Karnataka, India Bangalore Karnataka India
(31) Priority Document No	:NA	(72)**Name of Inventor :**
(32) Priority Date	:NA	**1)Krishnan Venkateswaran**
(33) Name of priority country	:NA	**2)Sivaramakrishnan P**
(86) International Application No	:NA	
Filing Date	:NA	
(87) International Publication No	: NA	
(61) Patent of Addition to Application Number	:NA	
Filing Date	:NA	
(62) Divisional to Application Number	:NA	
Filing Date	:NA	

(57) Abstract :
An optical device (100) for determining optical power of a human eye is disclosed. The device (100) includes a holder (110) defined with a recess (114) and a hole (112). A plurality of discs (120) is integrated in the recess (114) of the holder (110) and are with a plurality of apertures 10 (122a) being capable of aligning with the hole (112) of the holder (100). A lens (122) is positioned in each of the plurality of apertures (122a) of each the plurality of discs (120), where each lens (122) in the holder (110) are of non-identical optical power, and the lens (122) in each of the plurality of discs (120) are indexable to be selectively aligned with the hole (112) of the holder (110) to determine the optical power of the human eye. 15 Figure 1 is a representative figure.

No. of Pages : 19 No. of Claims : 9

(12) PATENT APPLICATION PUBLICATION
(21) Application No.202441035015 A
(19) INDIA
(22) Date of filing of Application :02/05/2024
(43) Publication Date : 07/11/2025

(54) Title of the invention : SYSTEM FOR FASTENING OF BACK CHAINS IN JEWELRY

(51) International classification	:G06Q0030060000, G06Q0030020000, H02J0007000000, G06F0011340000, G06Q0020380000	(71)**Name of Applicant :** **1)K. SRINIVASAN** Address of Applicant :S.F.NO.1/2,1/3,414/1,414/2,415/2, ALANKAR THOTTAM ROAD, G.N. MILLS POST, NEAR VCS NAGAR STREET, COIMBATORE – 641029, TAMIL NADU, INDIA. COIMBATORE Tamil Nadu India
(31) Priority Document No	:NA	(72)**Name of Inventor :**
(32) Priority Date	:NA	**1)K. SRINIVASAN**
(33) Name of priority country	:NA	
(86) International Application No	:NA	
Filing Date	:NA	
(87) International Publication No	: NA	
(61) Patent of Addition to Application Number	:NA	
Filing Date	:NA	
(62) Divisional to Application Number	:NA	
Filing Date	:NA	

(57) Abstract :
ABSTRACT SYSTEM FOR FASTENING OF BACK CHAINS IN JEWELRY The various embodiments of the present invention provide a system for fastening the back chain in jewelry. The system comprises insert element, metal bead, chain links and hook, wherein, the metal bead is designed to be attached to the main jewelry, the insert element is designed to securely lock with metal bead, the chain links are designed to enable length adjustments of the back chain to obtain the necessary length of the back chain as per customer's measurements and the hook is provided to attach one end of the back chain to the main jewelry. FIG. 1

No. of Pages : 12 No. of Claims : 10

(12) PATENT APPLICATION PUBLICATION
(21) Application No.202441035040 A
(19) INDIA
(22) Date of filing of Application :03/05/2024
(43) Publication Date : 07/11/2025

(54) Title of the invention : SYSTEM FOR SPRING LOADED LOCKING MECHANISM FOR JEWELRY

(51) International classification	:A44B0011250000, E05B0065520000, A45C0013100000, E05B0083300000, H01R0013629000
(31) Priority Document No	:NA
(32) Priority Date	:NA
(33) Name of priority country	:NA
(86) International Application No	:NA
Filing Date	:NA
(87) International Publication No	: NA
(61) Patent of Addition to Application Number	:NA
Filing Date	:NA
(62) Divisional to Application Number	:NA
Filing Date	:NA

(71)**Name of Applicant :**
1)K. SRINIVASAN
Address of Applicant :S.F.NO.1/2,1/3,414/1,414/2,415/2, ALANKAR THOTTAM ROAD, G.N. MILLS POST, NEAR VCS NAGAR STREET, COIMBATORE – 641029, TAMIL NADU, INDIA. COIMBATORE Tamil Nadu India
(72)**Name of Inventor :**
1)K. SRINIVASAN

(57) Abstract :
ABSTRACT SYSTEM FOR SPRING LOADED LOCKING MECHANISM FOR JEWELRY The various embodiments of the present invention provide a system for spring loaded locking mechanism for jewelry. The system comprises a clasping piece, protrusion element, clasping piece, locking mechanism, push button, spring, locking mechanism and linking unit. The clasping piece and the protrusion element are inserted in through an aperture and interlock with the locking mechanism in the clasping piece. The locking mechanism comprises a locking unit that interlocks with the groove in the protrusion element. The locking mechanism is designed to be operated in a plurality of configurations including a lever back configuration and push button configuration. A loaded spring is designed to interact with the button that disengages the locking unit from the groove of the protrusion element and enables the returning of the locking unit back to its original position after the force on the push button is released. FIG. 1a

No. of Pages : 18 No. of Claims : 8

(12) PATENT APPLICATION PUBLICATION
(21) Application No.202441035068 A
(19) INDIA
(22) Date of filing of Application :03/05/2024
(43) Publication Date : 07/11/2025

(54) Title of the invention : Effective Fungicidal Combination for Crop Protection

(51) International classification	: A01N43/653, A01N47/24	
(31) Priority Document No	:NA	
(32) Priority Date	:NA	
(33) Name of priority country	:NA	
(86) International Application No	:NA	
Filing Date	:NA	
(87) International Publication No	: NA	
(61) Patent of Addition to Application Number	:NA	
Filing Date	:NA	
(62) Divisional to Application Number	:NA	
Filing Date	:NA	

(71)**Name of Applicant :**
1)NACL Industries Ltd
Address of Applicant :NACL Industries Ltd., Plot No 12-A, C Block, Lakshmi Towers, Nagarjuna Hills, Punjagutta, Hyderabad - 500082, Telangana, India. HYDERABAD Telangana India
(72)**Name of Inventor :**
1)Dr. Navya Matcha
2)Venu Gopala Reddy Thummuru
3)Dr. Alagasamy Kuppusamy

(57) Abstract :
Title: Effective Fungicidal Combination for Crop Protection ABSTRACT The present invention relates to a synergistic fungicidal composition comprising a combination of three active ingredients: boscalid, mancozeb, and trifloxystrobin. These actives, belonging respectively to the SDHI, dithiocarbamate, and strobilurin classes of fungicides, are formulated in specific proportions that exhibit enhanced fungicidal efficacy against a wide range of phytopathogenic fungi. The composition provides superior control of diseases such as blight, powdery mildew, and downy mildew and anthracnose in crops including chilli, tomato, grape, and cereals. The synergistic interaction among the components contributes to improved disease management and reduced risk of resistance development.

No. of Pages : 29 No. of Claims : 10

(12) PATENT APPLICATION PUBLICATION
(21) Application No.202441035069 A
(19) INDIA
(22) Date of filing of Application :03/05/2024
(43) Publication Date : 07/11/2025

(54) Title of the invention : Synergistic Fungicidal Composition for Enhanced Crop Yield and Quality

(51) International classification	: A01N37/50, A01N43/02, A01N43/40, A01N43/54, A01N43/653, A01N47/44	(71)**Name of Applicant :** **1)NACL Industries Ltd.,** Address of Applicant :NACL Industries Ltd., Plot No 12-A, C Block, Lakshmi Towers, Nagarjuna Hills, Punjagutta, Hyderabad - 500082, Telangana, India. HYDERABAD Telangana India (72)**Name of Inventor :** **1)Dr. Navya Matcha** **2)Venu Gopala Reddy Thummuru** **3)Dr. Alagasamy Kuppusamy**
(31) Priority Document No	:NA	
(32) Priority Date	:NA	
(33) Name of priority country	:NA	
(86) International Application No	:NA	
Filing Date	:NA	
(87) International Publication No	: NA	
(61) Patent of Addition to Application Number	:NA	
Filing Date	:NA	
(62) Divisional to Application Number	:NA	
Filing Date	:NA	

(57) Abstract :
Title: Synergistic Fungicidal Composition for Enhanced Crop Yield and Quality ABSTRACT The present invention relates to a synergistic fungicidal composition comprising a combination of Myclobutanil and Trifloxystrobin, optionally along with one or more agriculturally acceptable carriers or adjuvants. The composition provides enhanced control of a broad spectrum of fungal pathogens affecting various crops, particularly those causing foliar and systemic infections. The synergistic fungicidal composition of the present invention is in the form of a Suspension Concentrate (SC). The synergistic interaction between Myclobutanil, a systemic triazole fungicide, and Trifloxystrobin, a strobilurin-class fungicide, results in improved efficacy at reduced application rates, leading to better resistance management and reduced environmental impact. The invention further provides methods of controlling fungal diseases using the said composition.

No. of Pages : 29 No. of Claims : 9

(12) PATENT APPLICATION PUBLICATION
(21) Application No.202441035070 A
(19) INDIA
(22) Date of filing of Application :03/05/2024
(43) Publication Date : 07/11/2025

(54) Title of the invention : Novel Fungicidal combination with Improved Persistence in Crop Protection

(51) International classification	: A01N47/10, A01N43/647, A01N59/00, A01P3/00	(71)**Name of Applicant :** **1)NACL Industries Ltd.,** Address of Applicant :NACL Industries Ltd., Plot No 12-A, C Block, Lakshmi Towers, Nagarjuna Hills, Punjagutta, Hyderabad - 500082, Telangana, India. HYDERABAD Telangana India
(31) Priority Document No	:NA	(72)**Name of Inventor :**
(32) Priority Date	:NA	**1)Dr. Navya Matcha**
(33) Name of priority country	:NA	**2)Venu Gopala Reddy Thummuru**
(86) International Application No	:NA	**3)Dr. Alagasamy Kuppusamy**
Filing Date	:NA	
(87) International Publication No	: NA	
(61) Patent of Addition to Application Number	:NA	
Filing Date	:NA	
(62) Divisional to Application Number	:NA	
Filing Date	:NA	

(57) Abstract :
Title: Novel Fungicidal Combination with Improved Persistence in Crop Protection ABSTRACT The present invention relates to a stable synergistic fungicidal suspension concentrate formulation comprising a) dimethomorph, b) at least one triazole fungicide c) at least one dispersing agent; and d) at least one agrochemically acceptable excipient. The combination exhibits enhanced fungicidal efficacy compared to the individual application of each active ingredient. The composition is particularly effective against a wide range of fungal pathogens affecting agricultural crops. The suspension concentrate formulation ensures improved physical stability, superior bio-availability, and ease of application.

No. of Pages : 41 No. of Claims : 10

(12) PATENT APPLICATION PUBLICATION
(21) Application No.202441035075 A
(19) INDIA
(22) Date of filing of Application :03/05/2024
(43) Publication Date : 07/11/2025

(54) Title of the invention : Dosage forms of tafamidis and its pharmaceutically acceptable salt thereof

(51) International classification	:A61K9/48, A61K9/20, A61K31/167, A61K31/423, A61K9/48	(71)**Name of Applicant :** **1)BIOPHORE INDIA PHARMACEUTICALS PVT. LTD** Address of Applicant :Plot No. 92, 1-98/2/92, Phase II, Kavuri Hills, Jubilee Hills Hyderabad Telangana India (72)**Name of Inventor :** **1)Manik Reddy Pullagurla** **2)Srinivas Arutla** **3)Jagadeesh Babu Rangisetty**
(31) Priority Document No	:NA	
(32) Priority Date	:NA	
(33) Name of priority country	:NA	
(86) International Application No	:NA	
Filing Date	:NA	
(87) International Publication No	: NA	
(61) Patent of Addition to Application Number	:NA	
Filing Date	:NA	
(62) Divisional to Application Number	:NA	
Filing Date	:NA	

(57) Abstract :
"Dosage forms of tafamidis and its pharmaceutically acceptable salt thereof" The disclosure relates to a novel liquid dosage form comprising composition containing tafamidis or its pharmaceutically acceptable salt particularly tafamidis meglumine and process of preparation thereof. The disclosure also relates to a novel liquid dosage form which is indicated for the treatment of the cardiomyopathy of wild type or hereditary transthyretin-mediated amyloidosis in adults to reduce cardiovascular mortality and cardiovascular-related hospitalization.

No. of Pages : 15 No. of Claims : 9

(12) PATENT APPLICATION PUBLICATION
(21) Application No.202441035076 A
(19) INDIA
(22) Date of filing of Application :03/05/2024
(43) Publication Date : 07/11/2025

(54) Title of the invention : SOLID DISPERSIONS OF 1-(5-TERT-BUTYL-1,2-OXAZOL-3-YL)-3-(4-{7-[2-(MORPHOLIN-4-YL)ETHOXY]IMIDAZO[2,1-B][1,3]BENZOTHIAZOL-2-YL}PHENYL)UREA DIHYDROCHLORIDE

(51) International classification	:A61K31/4245, A61K9/16, A61K9/20, A61K31/5415, A61P7/10, A61P9/00, A61P9/12
(31) Priority Document No	:NA
(32) Priority Date	:NA
(33) Name of priority country	:NA
(86) International Application No	:NA
Filing Date	:NA
(87) International Publication No	: NA
(61) Patent of Addition to Application Number	:NA
Filing Date	:NA
(62) Divisional to Application Number	:NA
Filing Date	:NA

(71)**Name of Applicant :**
1)BIOPHORE INDIA PHARMACEUTICALS PVT. LTD
Address of Applicant :Plot No. 92, 1-98/2/92, Phase II, Kavuri Hills, Jubilee Hills Hyderabad Telangana India
(72)**Name of Inventor :**
1)Manik Reddy Pullagurla
2)Bhaskar Reddy Pitta
3)Jagadeesh Babu Rangisetty

(57) Abstract :
"SOLID DISPERSIONS OF 1-(5-TERT-BUTYL-1,2-OXAZOL-3-YL)-3-(4- {7-[2-(MORPHOLIN-4-YL) ETHOXY] IMIDAZO [2,1- B] [1,3] BENZOTHIAZOL-2-YL} PHENYL)UREA DIHYDROCHLORIDE" The present invention relates to a solid dispersion of 1-(5-tert-butyl-1,2-oxazol-3- yl)-3-(4-{7-[2-(morpholin-4-yl) ethoxy]imidazo[2,1-b][1,3]benzothiazol-2-yl} phenyl)urea dihydrochloride (1), and process for its preparation thereof.

No. of Pages : 18 No. of Claims : 6

(12) PATENT APPLICATION PUBLICATION
(21) Application No.202441035077 A
(19) INDIA
(22) Date of filing of Application :03/05/2024
(43) Publication Date : 07/11/2025

(54) Title of the invention : SOLID FORMS OF 5-AMINO-3-{4-[(5-FLUORO-2-METHOXYBENZAMIDO)METHYL] PHENYL}-1-[(2S)-1,1,1-TRIFLUOROPROPAN-2-YL]-1H-PYRAZOLE-4-CARBOXAMIDE

(51) International classification	:A01N0043560000, A01N0043780000, A61K0031470900, A61P0035000000, A01N0053000000
(31) Priority Document No	:NA
(32) Priority Date	:NA
(33) Name of priority country	:NA
(86) International Application No	:NA
Filing Date	:NA
(87) International Publication No	: NA
(61) Patent of Addition to Application Number	:NA
Filing Date	:NA
(62) Divisional to Application Number	:NA
Filing Date	:NA

(71)**Name of Applicant :**
1)BIOPHORE INDIA PHARMACEUTICALS PVT. LTD
Address of Applicant :Plot No. 92, 1-98/2/92, Phase II, Kavuri Hills, Jubilee Hills Hyderabad Telangana India
(72)**Name of Inventor :**
1)Manik Reddy Pullagurla
2)Bhaskar Reddy Pitta
3)Jagadeesh Babu Rangisetty

(57) Abstract :
"SOLID DISPERSIONS OF 5-AMINO-3-{4-[(5-FLUORO-2-METHOXYBENZAMIDO) METHYL]PHENYL}-1-[(2S)-1,1,1- TRIFLUOROPROPAN-2-YL]-1H-PYRAZOLE-4-CARBOXAMIDE" The present invention relates to a solid dispersion of 5-amino-3-{4-[(5-fluoro-2- methoxybenzamido)methyl]phenyl}-1-[(2S)-1,1,1-trifluoropropan-2-yl]-1H-pyrazole-4-carboxamide and process for its preparation thereof.

No. of Pages : 17 No. of Claims : 7

(12) PATENT APPLICATION PUBLICATION
(21) Application No.202441035078 A
(19) INDIA
(22) Date of filing of Application :03/05/2024
(43) Publication Date : 07/11/2025

(54) Title of the invention : AMORPHOUS FORM OF FLUORESCEIN SODIUM AND PROCESS FOR ITS PREPARATION THEREOF

(51) International classification	:A61K31/352, A61K49/00, C07D493/10, C09K11/06, C07D311/82
(31) Priority Document No	:NA
(32) Priority Date	:NA
(33) Name of priority country	:NA
(86) International Application No	:NA
Filing Date	:NA
(87) International Publication No	: NA
(61) Patent of Addition to Application Number	:NA
Filing Date	:NA
(62) Divisional to Application Number	:NA
Filing Date	:NA

(71)**Name of Applicant :**
1)BIOPHORE INDIA PHARMACEUTICALS PVT. LTD
Address of Applicant :Plot No. 92, 1-98/2/92, Phase II, Kavuri Hills, Jubilee Hills Hyderabad Telangana India
(72)**Name of Inventor :**
1)Manik Reddy Pullagurla
2)Bhaskar Reddy Pitta
3)Suresh Babu Namana
4)Jagadeesh Babu Rangisetty

(57) Abstract :
"AMORPHOUS FORM OF FLUORESCEIN SODIUM AND PROCESS FOR ITS PREPARATION THEREOF" The present invention relates to amorphous form of Fluorescein sodium (1) and process for its preparation thereof. It further relates to amorphous form of Fluorescein sodium (1) prepared in the present invention is having purity greater than 99% by HPLC.

No. of Pages : 12 No. of Claims : 9

(12) PATENT APPLICATION PUBLICATION

(21) Application No.202441035113 A

(19) INDIA

(22) Date of filing of Application :03/05/2024

(43) Publication Date : 07/11/2025

(54) Title of the invention : AN INDEPENDENTLY STEERABLE DOUBLE-TRAP OPTICAL TWEEZERS WITH BACK-SCATTERED CONFOCAL DETECTION SCHEME

(51) International classification	:G21K1/00	(71)**Name of Applicant :**
(31) Priority Document No	:NA	**1)RAMAN RESEARCH INSTITUTE**
(32) Priority Date	:NA	Address of Applicant :RAMAN RESEARCH INSTITUTE, C. V. RAMAN AVENUE, SADASHIVANAGAR Banglore Karnataka India
(33) Name of priority country	:NA	
(86) International Application No	:NA	(72)**Name of Inventor :**
Filing Date	:NA	**1)ASHRAF, Md Arsalan**
(87) International Publication No	: NA	**2)PULLARKAT, Pramod A**
(61) Patent of Addition to Application Number	:NA	
Filing Date	:NA	
(62) Divisional to Application Number	:NA	
Filing Date	:NA	

(57) Abstract :

The present invention discloses a system and method for dual optical trapping and position detection of particlesthat. The system uses back-scattered light for position detection using a pair of position detectors. The back-scattered detection of the two independently steerable traps requires optical design that combines the trapping optics as well as the optics for detection. The independently steerable dual optical trap is achieved using a confocal scheme which gives the advantage that the back-scattered light from the two independent traps remains centered on their respective detectors irrespective of the trap position. Such independently steerable double-trap optical tweezers is critical for the independent steering of the two traps without any need for changing the alignment of the detectors, avoiding cross-talk between detectors, and for convenient, single-module integration with high-end research microscopes.

No. of Pages : 31 No. of Claims : 17

(12) PATENT APPLICATION PUBLICATION
(21) Application No.202441035129 A
(19) INDIA
(22) Date of filing of Application :03/05/2024
(43) Publication Date : 07/11/2025

(54) Title of the invention : PACKAGING APPARATUS AND A METHOD THEREOF

(51) International classification	:B65D0005180000, B65D0005520000, B65D0005380000, B31B0100000000, F25B0039020000	(71)**Name of Applicant :** **1)FLIPKART INTERNET PRIVATE LIMITED** Address of Applicant :Buildings Alyssa, Begonia & Clover, Embassy Tech Village, Outer Ring Road, Devarabeesanahalli Village, Bengaluru – 560103, Karnataka, India Bengaluru Karnataka India
(31) Priority Document No	:NA	(72)**Name of Inventor :**
(32) Priority Date	:NA	**1)Paras Grewal**
(33) Name of priority country	:NA	**2)Ashish Surve**
(86) International Application No	:NA	**3)Srikrishnan J**
Filing Date	:NA	
(87) International Publication No	: NA	
(61) Patent of Addition to Application Number	:NA	
Filing Date	:NA	
(62) Divisional to Application Number	:NA	
Filing Date	:NA	

(57) Abstract :
The present disclosure relates to a packaging apparatus and method for packaging one or more articles. The packaging comprises a bottom panel of a packaging container (100) to receive the one or more articles; a plurality of blanks (100p, 100q, 100r, 100s) connected by edges to the bottom panel in order to confine the one or more articles; a flute member (100F) being fixedly disposed on at least one inner surface of one of the plurality of blanks (100p, 100q, 100r, 100s) such that the flute member (100F) forming an integral part; and one or more portions (102) of the plurality of panels (100p, 100q, 100r, 100s) are locked together to form a single opening flap of the packaging container (100). [FIG. 1]

No. of Pages : 15 No. of Claims : 11

(12) PATENT APPLICATION PUBLICATION
(21) Application No.202441035130 A
(19) INDIA
(22) Date of filing of Application :03/05/2024
(43) Publication Date : 07/11/2025

(54) Title of the invention : SYSTEMS AND METHODS FOR VIDEO CONTENT MANAGEMENT

(51) International classification	:G10L0015260000, G06F0016330000, G06Q0030020000, G06N0003080000, H04N0021845000
(31) Priority Document No	:NA
(32) Priority Date	:NA
(33) Name of priority country	:NA
(86) International Application No	:NA
Filing Date	:NA
(87) International Publication No	: NA
(61) Patent of Addition to Application Number	:NA
Filing Date	:NA
(62) Divisional to Application Number	:NA
Filing Date	:NA

(71)**Name of Applicant :**
1)HARMAN CONNECTED SERVICES, INC.
Address of Applicant :400 Atlantic Street, 15th Floor, Stamford, Connecticut 06901, USA U.S.A.
(72)**Name of Inventor :**
1)Rajeev Kumar Chauhan
2)Manish Kumar Verma
3)Parag Jain
4)Haijun (Hardy) Zou

(57) Abstract :
A method includes identifying human speech embedded within video content and converting the human speech embedded within the video into text, wherein the conversion uses a transformation model in combination with an embedding vector. The method further includes receiving a word search request and identifying the converted text matching the word search request. The method also includes accessing video corresponding to the identified converted text based on a timestamp and providing as an output a video segment corresponding to the accessed video.

No. of Pages : 40 No. of Claims : 20

(12) PATENT APPLICATION PUBLICATION
(21) Application No.202441035135 A
(19) INDIA
(22) Date of filing of Application :03/05/2024
(43) Publication Date : 07/11/2025

(54) Title of the invention : METHODS AND SYSTEMS FOR REMOTE ATTESTATION IN ZERO-TRUST ARCHITECTURE OF A WIRELESS COMMUNICATION NETWORK

(51) International classification	:H04L0009320000, G06F0021570000, H04L0009080000, H04L0067100000, G06F0021530000
(31) Priority Document No	:NA
(32) Priority Date	:NA
(33) Name of priority country	:NA
(86) International Application No	:NA
Filing Date	:NA
(87) International Publication No	: NA
(61) Patent of Addition to Application Number	:NA
Filing Date	:NA
(62) Divisional to Application Number	:NA
Filing Date	:NA

(71)**Name of Applicant :**
1)Samsung Electronics Co., Ltd.
Address of Applicant :129, Samsung-ro, Yeongtong-gu, Suwon-si, Gyeonggi-do, 16677, Republic of Korea Republic of Korea
(72)**Name of Inventor :**
1)VUPPALA, Ramesh Chandra
2)RUKMANGATHAN, Ramkumar
3)SHARMA, Neha
4)JE, Donghyun

(57) Abstract :
The present disclosure discloses techniques for remote attestation in a zero-trust architecture of a wireless communication network. The method includes receiving, by a trust function, at least one proof of evidence from a first Network Function (NF) consumer. The at least one proof of evidence indicates trustworthiness of the first NF consumer. The method includes determining, by the trust function, an attestation result based on the received at least one proof of evidence. The method also includes transmitting, by the trust function, the attestation result to the first NF consumer. The attestation result allows the first NF consumer to establish communication with another NF consumer.

No. of Pages : 57 No. of Claims : 39

(12) PATENT APPLICATION PUBLICATION
(21) Application No.202441035138 A
(19) INDIA
(22) Date of filing of Application :03/05/2024
(43) Publication Date : 07/11/2025

(54) Title of the invention : METHOD AND DEVICE FOR IMPROVED METADATA MANAGEMENT

(51) International classification	:G06F0012020000, G06F0003060000, G06F0012100900, G06F0012060000, G06F0011140000
(31) Priority Document No	:NA
(32) Priority Date	:NA
(33) Name of priority country	:NA
(86) International Application No	:NA
Filing Date	:NA
(87) International Publication No	: NA
(61) Patent of Addition to Application Number	:NA
Filing Date	:NA
(62) Divisional to Application Number	:NA
Filing Date	:NA

(71)**Name of Applicant :**
1)SAMSUNG ELECTRONICS CO., LTD.
Address of Applicant :129, Samsung-ro, Yeongtong-gu, Suwon-si, Gyeonggi-do, 443-742, Republic of Korea Republic of Korea
(72)**Name of Inventor :**
1)Nishchay Malakar
2)Anantha Sharma
3)Sharath Kumar Kodase
4)Sushma Vishwakarma
5)Gangheyamoorthy Ayyanar Ponnusamy

(57) Abstract :
ABSTRACT METHOD AND DEVICE FOR IMPROVED METADATA MANAGEMENT In the present disclosure, a method for improved metadata management includes receiving a memory write command from a host device, performing the data write operation, storing a mapping of the logical address and the physical address as a first logical-to-physical (L2P) address mapping entry of the volatile memory and as a second L2P address mapping entry of the buffer, determining whether a number of the second set of L2P address mapping entries of the buffer exceeds a predefined number of L2P address mapping entries, upon determining that the number of the second set of L2P address mapping entries of the buffer exceeds the predefined number of L2P address mapping entries, sequentially reading the plurality of L2P address mapping tables of the non-volatile memory, and updating the a first set of L2P address mapping tables based on the first set of L2P address mapping entries of the volatile memory. [Fig 8]

No. of Pages : 36 No. of Claims : 17

(12) PATENT APPLICATION PUBLICATION
(21) Application No.202441035145 A
(19) INDIA
(22) Date of filing of Application :03/05/2024
(43) Publication Date : 07/11/2025

(54) Title of the invention : SYSTEMS AND METHODS FOR IMPLEMENTING A SERVICE IDENTITY PLATFORM WITH CLOUD-BASED PUBLIC KEY INFRASTRUCTURE (PKI)

(51) International classification	:H04L0009320000, A61B0017000000, H04L0067100000, H04W0012060000, H04L0067120000	(71)**Name of Applicant :** **1)ZSCALER, INC.** Address of Applicant :120 Holger Way, San Jose, CA 95134, USA U.S.A.
(31) Priority Document No	:NA	(72)**Name of Inventor :** **1)Lidor Pergament**
(32) Priority Date	:NA	**2)Siva Udupa**
(33) Name of priority country	:NA	**3)Srikanth Devarajan**
(86) International Application No	:NA	**4)Akshat Maheshwari**
Filing Date	:NA	**5)Sujay Kumar**
(87) International Publication No	: NA	**6)Shashidhara M Nanjundaswamy**
(61) Patent of Addition to Application Number	:NA	**7)Loren Weith**
Filing Date	:NA	**8)Sripathy Kayottu**
(62) Divisional to Application Number	:NA	
Filing Date	:NA	

(57) Abstract :
Systems and methods for implementing a service identity platform with cloud-based Public Key Infrastructure (PKI) include providing (902) security as a service via a cloud-based system (100) for a plurality of tenants, wherein the cloud-based system includes a plurality of components communicatively coupled and adapted to communicate with one another based on mutual Transport Layer Security (mTLS) authentication; responsive (904) to a new component requiring deployment within the cloud-based system (100), performing an enrollment process for the new component; and subsequent (906) to the enrollment process, utilizing the new component within the cloud-based system (100) for providing security as a service. FIG. 22

No. of Pages : 74 No. of Claims : 10

(12) PATENT APPLICATION PUBLICATION
(21) Application No.202441035160 A
(19) INDIA
(22) Date of filing of Application :03/05/2024
(43) Publication Date : 07/11/2025

(54) Title of the invention : SYSTEMS AND METHODS FOR EXTENSIBLE, MODULAR, AND HIERARCHICAL STEP-UP AUTHENTICATION

(51) International classification	:G06F0021320000, G06F0021310000, G06F0016270000, G01C0021340000, H04W0048080000
(31) Priority Document No	:NA
(32) Priority Date	:NA
(33) Name of priority country	:NA
(86) International Application No	:NA
Filing Date	:NA
(87) International Publication No	: NA
(61) Patent of Addition to Application Number	:NA
Filing Date	:NA
(62) Divisional to Application Number	:NA
Filing Date	:NA

(71)**Name of Applicant :**
1)ZSCALER, INC.
Address of Applicant :120 Holger Way, San Jose, CA 95134, USA U.S.A.
(72)**Name of Inventor :**
1)Rahul Singh
2)Manish Jasyal
3)Murtuza Attarwala
4)Wei Wang

(57) Abstract :
Systems and methods for a hierarchical step-up authentication mechanism include monitoring (902) access to one or more private applications (402, 404); responsive (904) to a request to access the one or more private applications, determining an Authentication Level (AL) of a user (102) associated with the request, wherein determining the AL of the user comprises referencing one or more AL trees; and responsive (906) to determining an AL of the user, performing one or more actions based thereon, wherein the one or more actions comprises one of allowing access to the one or more private applications (402, 404) and denying access to the one or more private applications (402, 404). FIG. 23

No. of Pages : 73 No. of Claims : 10

(12) PATENT APPLICATION PUBLICATION
(21) Application No.202441035189 A
(19) INDIA
(22) Date of filing of Application :03/05/2024
(43) Publication Date : 07/11/2025

(54) Title of the invention : METHOD FOR MANUFACTURING A CLUB HEAD

(51) International classification	:A63B0053040000, A61K0036110000, A63B0060020000, A63B0060620000, B23P0011000000	(71)**Name of Applicant :** **1)JUNG-HSIEN HUANG** Address of Applicant :11F., No. 63, Yangming Road, Sanmin District, Kaohsiung City 807029, Taiwan (R.O.C.) Taiwan (72)**Name of Inventor :** **1)JUNG-HSIEN HUANG**
(31) Priority Document No	:NA	
(32) Priority Date	:NA	
(33) Name of priority country	:NA	
(86) International Application No	:NA	
Filing Date	:NA	
(87) International Publication No	: NA	
(61) Patent of Addition to Application Number	:NA	
Filing Date	:NA	
(62) Divisional to Application Number	:NA	
Filing Date	:NA	

(57) Abstract :
ABSTRACT METHOD FOR MANUFACTURING A CLUB HEAD A method (3)is adapted to manufacture a club head (4)with a bending 5 portion (45), a hosel (44), and a head face (43). The method (3)includes preparing a metal blank (a) having an engagement segment (a3), a head segment (a2), and a neck segment (a1). The method (3) includes a bending and pressing step (32)for pressing the head segment (a2)and the engagement segment (a3), thereby forming a bending contour 10 serving as the bending portion (45)and forming a face region (43') and a waste unit (c)protruding there from. The method (3)includes a punching step (33) for punching the neck segment (a1), thereby forming a peripheral wall (44b) with a trough (44a) which serves as the hosel (44). The method (3) includes a trimming step (34) for 15 flattening the face region (43') and removing the waste unit (c), thereby achieving the head face (43). The punching step (33)is conducted before or after the bending and pressing step (32).The method (3)is executed in a simplified manner and reduces production costs and defective products.

No. of Pages : 31 No. of Claims : 6

(12) PATENT APPLICATION PUBLICATION
(21) Application No.202441035192 A
(19) INDIA
(22) Date of filing of Application :03/05/2024
(43) Publication Date : 07/11/2025

(54) Title of the invention : SHA3 ACCELERATOR FOR HASH-BASED SIGNATURE SCHEMES

(51) International classification	:H04L0009320000, H04L0009060000, H04L0009300000, H04L0009080000, G06F0016220000	(71)**Name of Applicant :** **1)Bosch Global Software Technologies Private Limited** Address of Applicant :123, Industrial Layout, Hosur Road, Koramangala, Bangalore – 560095, Karnataka, India Bangalore Karnataka India **2)Robert Bosch GmbH**
(31) Priority Document No	:NA	(72)**Name of Inventor :**
(32) Priority Date	:NA	**1)Dr. Vishal Saraswat**
(33) Name of priority country	:NA	**2)Dr. Suyash Kandele**
(86) International Application No	:NA	
Filing Date	:NA	
(87) International Publication No	: NA	
(61) Patent of Addition to Application Number	:NA	
Filing Date	:NA	
(62) Divisional to Application Number	:NA	
Filing Date	:NA	

(57) Abstract :
SHA3 ACCELERATOR FOR HASH-BASED SIGNATURE SCHEMES ABSTRACT Some embodiments are directed to hash-based signature schemes, in particular SHA2 based. Embodiments include private key generation, public key generation, signature generation, and signature verification. For example, a hash function may be applied to form a pseudo-random function (PRF), taking as input various string, wherein the string starts with an opcode, and e.g., a seed. In an embodiment, at least the start of some of the strings have a common start which has at least the length of one input block and/or at least the length of one word of the hash function. Figure 1.

No. of Pages : 56 No. of Claims : 15

(12) PATENT APPLICATION PUBLICATION
(21) Application No.202441035203 A
(19) INDIA
(22) Date of filing of Application :03/05/2024
(43) Publication Date : 07/11/2025

(54) Title of the invention : "ROBUST RETRANSMISSIONS AT MEDIUM ACCESS CONTROL LAYER FOR ULTRA HIGH RELIABILITY"

(51) International classification	:H04L0001180000, H04L0001000000, H04W0028060000, H04W0008240000, C07K0016000000
(31) Priority Document No	:NA
(32) Priority Date	:NA
(33) Name of priority country	:NA
(86) International Application No	:NA
Filing Date	:NA
(87) International Publication No	: NA
(61) Patent of Addition to Application Number	:NA
Filing Date	:NA
(62) Divisional to Application Number	:NA
Filing Date	:NA

(71)**Name of Applicant :**
1)Samsung Electronics Co., Ltd
Address of Applicant :129, Samsung-ro, Yeongtong-gu, Suwon- si,Gyeonggi-do 443-742, Republic of Korea Republic of Korea
(72)**Name of Inventor :**
1)Abhishek Chaturvedi
2)Karthik Srinivasa Gopalan
3)Manasi Ekkundi

(57) Abstract :
ABSTRACT "ROBUST RETRANSMISSIONS AT MEDIUM ACCESS CONTROL LAYER FOR ULTRA HIGH RELIABILITY" Embodiments herein relates to a method and AP MLD for robust retransmissions at MAC layer for ultra-high reliability. The method include transmitting UHR multi-link capability information element to non-AP MLD (301) indicating support for cross-link retransmission. Further, method includes mapping TID to all supported links for retransmissions within the AP MLD. The TTLM is applicable for both the intra-AP MLD and the inter-AP MLD scenarios. Further, the method includes transmitting the control information to the non-AP MLD to facilitate the cross-link retransmission. The control information includes all the supported links for retransmissions. FIG. 10

No. of Pages : 41 No. of Claims : 11

(12) PATENT APPLICATION PUBLICATION

(21) Application No.202441035212 A

(19) INDIA

(22) Date of filing of Application :03/05/2024

(43) Publication Date : 07/11/2025

(54) Title of the invention : DYNAMIC DEICER BOOTS WITH BIOMIMETIC LEADING EDGE FOR ENHANCED AIRCRAFT AERODYNAMICS AND SAFETY

(51) International classification	:B64D15/16, B64D15/20
(31) Priority Document No	:NA
(32) Priority Date	:NA
(33) Name of priority country	:NA
(86) International Application No	:NA
Filing Date	:NA
(87) International Publication No	: NA
(61) Patent of Addition to Application Number	:NA
Filing Date	:NA
(62) Divisional to Application Number	:NA
Filing Date	:NA

(71)**Name of Applicant :**

1)S. P. Sumanth

Address of Applicant :402, Begonia, Sankalpa Central Park, Jawa Main Road, Yadavagiri, Mysore, Karnataka, 570020, India Mysore Karnataka India

2)Raghavendra Surendra

3)Samyak Nagesha

(72)**Name of Inventor :**

1)Raghavendra Surendra

2)Samyak Nagesha

(57) Abstract :

TITLE: DYNAMIC DEICER BOOTS WITH BIOMIMETIC LEADING EDGE FOR ENHANCED AIRCRAFT AERODYNAMICS AND SAFETY ABSTRACT The present invention relates to a dynamic deicing and aerodynamic enhancement system for aircraft. The system comprises a deicer boot (001) mounted on the leading edge of an aerodynamic surface, incorporating inflatable chambers (002) configured to form biomimetic protuberances. A pneumatic supply system (003) controlled via electronically actuated valves (005) and a central control unit (007) dynamically inflates or deflates the chambers (002) based on real-time inputs from a sensor array (006). The system enables active disruption of ice formation and real-time optimization of aerodynamic performance, including reduction of flow separation, improvement of lift-to-drag ratios, and suppression of trailing-edge noise. Redundancy through backup pneumatic distribution (009) and secondary circuits (010) ensures reliability. The invention further extends to wind turbine blades, underwater vehicles, and combustion systems, offering dynamic surface control for performance optimization. Thus, the invention significantly advances deicing efficiency, aerodynamic safety, noise reduction, and multi-domain adaptability. FIG.2 is selected. 15 Claims, 8 Drawing Sheets

No. of Pages : 36 No. of Claims : 15

(12) PATENT APPLICATION PUBLICATION
(21) Application No.202441035213 A
(19) INDIA
(22) Date of filing of Application :03/05/2024
(43) Publication Date : 07/11/2025

(54) Title of the invention : AUTOMATED CLIMBING SPRAYER FOR HIGH TREE CROPS

(51) International classification	:A01M0007000000, B05B0012120000, H02J0007350000, B64G0001100000, A01G0003080000
(31) Priority Document No	:NA
(32) Priority Date	:NA
(33) Name of priority country	:NA
(86) International Application No	:NA
Filing Date	:NA
(87) International Publication No	: NA
(61) Patent of Addition to Application Number	:NA
Filing Date	:NA
(62) Divisional to Application Number	:NA
Filing Date	:NA

(71)**Name of Applicant :**
1)S. P. Sumanth
Address of Applicant :402, Begonia, Sankalpa Central Park, Jawa Main Road, Yadavagiri, Mysore, Karnataka, 570020, India Mysore Karnataka India
2)Samyak Nagesha
3)Raghavendra Surendra
(72)**Name of Inventor :**
1)Samyak Nagesha
2)Raghavendra Surendra

(57) Abstract :
TITLE: AUTOMATED CLIMBING SPRAYER FOR HIGH TREE CROPS ABSTRACT The present invention relates to an automated climbing sprayer apparatus designed for efficient and safe application of pesticides to tall tree crops, such as areca nuts. The apparatus comprises a locomotive body, adjustable gripping arms, a linear actuator-driven vertical climbing mechanism, and a 360-degree spraying unit. The system integrates ultrasonic sensors and optical cameras to perform real-time foliage mapping, enabling dynamic adjustment of spray parameters. Stabilization during climbing and spraying is achieved via propeller assemblies. The modular design permits attachment of alternative tools, such as pruning implements, chimney cleaners, pipeline monitors, and harvesting heads. The apparatus is powered by a hybrid system of batteries and solar panels, extending operational autonomy. Safety features include emergency descent mechanisms and remote monitoring capabilities. The invention significantly improves pesticide application efficiency, reduces chemical wastage, enhances environmental protection, and broadens operational versatility across agricultural and industrial sectors. FIG.2 is selected. 27 Claims, 2 Drawing Sheets

No. of Pages : 31 No. of Claims : 27

(12) PATENT APPLICATION PUBLICATION
(21) Application No.202441035216 A
(19) INDIA
(22) Date of filing of Application :03/05/2024
(43) Publication Date : 07/11/2025

(54) Title of the invention : METHODS AND UE FOR ENABLING UNEQUAL MODULATION IN WIRELESS LOCAL AREA NETWORK (WLAN)

(51) International classification	:H04W0084120000, H04L0001000000, H04L0005000000, H04J0011000000, H04B0007060000	(71)**Name of Applicant :** **1)SAMSUNG ELECTRONICS CO., LTD.** Address of Applicant :129, Samsung-ro, Yeongtong-gu, Suwon-si, Gyeonggi-do 443-742, Republic of Korea Republic of Korea
(31) Priority Document No	:NA	(72)**Name of Inventor :**
(32) Priority Date	:NA	**1)Aniruddh Rao Kabbinale**
(33) Name of priority country	:NA	**2)Anand Jee**
(86) International Application No	:NA	**3)Karthik Srinivasa Gopalan**
Filing Date	:NA	
(87) International Publication No	: NA	
(61) Patent of Addition to Application Number	:NA	
Filing Date	:NA	
(62) Divisional to Application Number	:NA	
Filing Date	:NA	

(57) Abstract :
ABSTRACT “METHODS AND UE FOR ENABLING UNEQUAL MODULATION IN WIRELESS LOCAL AREA NETWORK (WLAN)” Embodiments disclose methods for enabling an unequal modulation in a wireless local area network . The method determines a number of spatial streams (NSS) per UE (102) associated with a user. The method determines a maximum difference in a modulation index allowed across different spatial streams per user. The method determines a type of unequal modulation to be enabled at the UE (102). The method identifies a primary spatial stream, based on the type of unequal modulation to be enabled at the UE (102). The method enables assignment of the at least one unequal modulation index to all the spatial streams based on at least one of the NSS, the maximum difference in the modulation index allowed across different spatial streams per user, the type of unequal modulation to be enabled at the UE (102) and the identification of the primary spatial stream. FIG. 2

No. of Pages : 38 No. of Claims : 14

(12) PATENT APPLICATION PUBLICATION
(21) Application No.202441035323 A
(19) INDIA
(22) Date of filing of Application :03/05/2024
(43) Publication Date : 07/11/2025

(54) Title of the invention : INTELLIGENT BOLT SEALS AND ITS SYSTEM FOR LOGISTIC CONTAINERS OR TRUCK CONTAINERS

(51) International classification	:G09F0003030000, G06Q0010080000, H01L0023000000, E05B0039000000, G08B0013080000
(31) Priority Document No	:NA
(32) Priority Date	:NA
(33) Name of priority country	:NA
(86) International Application No	:NA
Filing Date	:NA
(87) International Publication No	: NA
(61) Patent of Addition to Application Number	:NA
Filing Date	:NA
(62) Divisional to Application Number	:NA
Filing Date	:NA

(71)**Name of Applicant :**
1)ANI ABRAHAM JOY
Address of Applicant :SECTORQUBE TECHNOLABS PVT LTD, 1ST FLOOR, A&A TOWERS, VADAKODE PO, KALAMASSERY Kerala India
(72)**Name of Inventor :**
1)Nibu Alias
2)Midhun Skaria
3)Sabarish Prakash
4)Ani Abraham Joy
5)Arjun Sarath
6)Binyas Valiyaveettil Latheef

(57) Abstract :
The present invention discloses an Intelligent Bolt Seal is designed to enhance the security of logistic containers or truck containers during transportation. The intelligent seal integrates advanced technologies, including sensors, communication modules, and Electronic bolt seal mechanism, providing a comprehensive solution for real-time monitoring and detection of tampering. Also the invention discloses the system behind operations on using the intelligent bolt seal.

No. of Pages : 9 No. of Claims : 20

(12) PATENT APPLICATION PUBLICATION
(21) Application No.202441035341 A
(19) INDIA
(22) Date of filing of Application :03/05/2024
(43) Publication Date : 07/11/2025

(54) Title of the invention : AN INTEGRATED CIRCUIT FOR POWER SUPPLY GLITCH IMMUNE INTERMEDIATE VOLTAGE SUPPLY AND A METHOD THEREOF

(51) International classification	:G05F0001560000, G05F0001575000, H03K0005125200, H03M0001080000, H03K0019003000
(31) Priority Document No	:NA
(32) Priority Date	:NA
(33) Name of priority country	:NA
(86) International Application No	:NA
Filing Date	:NA
(87) International Publication No	: NA
(61) Patent of Addition to Application Number	:NA
Filing Date	:NA
(62) Divisional to Application Number	:NA
Filing Date	:NA

(71)**Name of Applicant :**
1)Samsung Electronics Co., Ltd.
Address of Applicant :129, Samsung-ro, Yeongtong-gu, Suwon-si, Gyeonggi-do, 16677, Republic of Korea Suwon-si Republic of Korea
(72)**Name of Inventor :**
1)RAYABARAPU, Parthavy
2)SIDDAMURTHY, Subba Reddy
3)TADINADA, Aswani Aditya Kumar
4)ISSA, Venkatasuryam Setty

(57) Abstract :
The present disclosure relates to an integrated circuit for generating an intermediate supply voltage which is immune to glitches on power supply voltage. An example integrated circuit comprises a Band Gap Reference (BGR) circuit configured to generate a reference voltage immune to glitches on a power supply. The integrated circuit also comprises a Low Dropout (LDO) circuit which gets the reference voltage from the BGR circuit. The LDO circuit is configured to generate a glitch immune intermediate supply voltage based on the reference voltage and the power supply which is prone to glitch.

No. of Pages : 26 No. of Claims : 10

(12) PATENT APPLICATION PUBLICATION
(21) Application No.202441035495 A
(19) INDIA
(22) Date of filing of Application :04/05/2024
(43) Publication Date : 07/11/2025

(54) Title of the invention : SYSTEM AND METHOD FOR PREDICTING HEALTH STATE OF AN ENTITY

(51) International classification	:G06N0020000000, G06K0009620000, A61B0005000000, G16H0040670000, G16H0050300000	(71)**Name of Applicant :** **1)SKAN Research Trust** Address of Applicant :No 747, 18th Main, 6th Block, Koramangala, Bangalore – 560095, Karnataka, India Bangalore Karnataka India **2)Mindsculpt Analytics Private Limited**
(31) Priority Document No	:NA	(72)**Name of Inventor :**
(32) Priority Date	:NA	**1)Paul Christadas Salins**
(33) Name of priority country	:NA	**2)Ashok Soota**
(86) International Application No	:NA	
Filing Date	:NA	
(87) International Publication No	: NA	
(61) Patent of Addition to Application Number	:NA	
Filing Date	:NA	
(62) Divisional to Application Number	:NA	
Filing Date	:NA	

(57) Abstract :
SYSTEM AND METHOD FOR PREDICTING HEALTH STATE OF AN ENTITY Embodiments herein disclose a system (100) and method (3000) for predicting health state of an entity. The method (3000) comprises generating an n-dimensional dataset from a plurality of raw health data, wherein the n-dimensional dataset comprises a plurality of data points related to health of the entity, and wherein the n-dimensional dataset comprises high dimensional matrix of the plurality of data points. The method (3000) further comprises reducing dimensionality of the n-dimensional dataset to create a lower-dimensional dataset. The method (3000) further comprises generating a topological representation of the lower-dimensional dataset to create a personalized health portrait of the entity and analyzing the personalized health portrait to predict health state of the entity based on the analysis. Refer FIG. 3

No. of Pages : 31 No. of Claims : 12

(12) PATENT APPLICATION PUBLICATION
(21) Application No.202441035506 A
(19) INDIA
(22) Date of filing of Application :04/05/2024
(43) Publication Date : 07/11/2025

(54) Title of the invention : INTEGRATED EDUCATIONAL PLATFORM FOR FOSTERING POSITIVE PERSONAL DEVELOPMENT

(51) International classification	:G09B0019000000, G06Q0010100000, G16H0080000000, G16H0020300000, G06F0021310000
(31) Priority Document No	:NA
(32) Priority Date	:NA
(33) Name of priority country	:NA
(86) International Application No	:NA
Filing Date	:NA
(87) International Publication No	: NA
(61) Patent of Addition to Application Number	:NA
Filing Date	:NA
(62) Divisional to Application Number	:NA
Filing Date	:NA

(71)**Name of Applicant :**
1)Aisshwarya DKS Hegde
Address of Applicant :National Hill View Public School, Unit II Banashankari, Bengaluru, Karnataka 560085, India Bangalore Karnataka India
(72)**Name of Inventor :**
1)Aisshwarya DKS Hegde

(57) Abstract :
This proposal outlines an innovative, integrated educational platform designed to foster positive personal development. The platform utilizes a modular approach, addressing key aspects of holistic growth. It incorporates a Monitoring & Analysis module to track activity and analyse performance data. Furthermore, a Growth Mind-set mechanism leverages data to provide personalized feedback and engaging activities, framing challenges as learning opportunities. Constructive Conflict Resolution employs simulations to hone skills in respectful communication, active listening, and collaboration. The platform also offers a Self-Affirmation module delivering strengths and weaknesses feedback, goal-setting tools, and achievement recognition. Additionally, modules on Gratitude Expression and Forgiveness cultivate appreciation and emotional regulation, respectively. Each module is assessed, and progress is monitored to promote a growth mind-set where failures are seen as stepping stones. Accessible via a secure online platform or dedicated mobile app, this comprehensive system empowers individuals to achieve their full potential.

No. of Pages : 18 No. of Claims : 12

(12) PATENT APPLICATION PUBLICATION
(21) Application No.202441035570 A
(19) INDIA
(22) Date of filing of Application :06/05/2024
(43) Publication Date : 07/11/2025

(54) Title of the invention : METHOD FOR PREPARING A STABLE-LIQUID EMULSION OF BLACK PEPPER OLEORESIN

(51) International classification	:A23L27/10, A23L29/00, A23L29/10, A61K8/92, A61K47/44, A61Q19/00, A61K8/06, A61K8/97
(31) Priority Document No	:NA
(32) Priority Date	:NA
(33) Name of priority country	:NA
(86) International Application No	:NA
Filing Date	:NA
(87) International Publication No	: NA
(61) Patent of Addition to Application Number	:NA
Filing Date	:NA
(62) Divisional to Application Number	:NA
Filing Date	:NA

(71)**Name of Applicant :**
1)INDIAN INSTITUTE OF TECHNOLOGY TIRUPATI
Address of Applicant :Indian Institute of Technology Tirupati Yerpedu – Venkatagiri Road, Yerpedu Post, Tirupati District, Andhra Pradesh. Pincode - 517619 Tirupati Andhra Pradesh India
(72)**Name of Inventor :**
1)Selvakumar M
2)KSMS Raghavarao
3)Dr. Trivikram Reddy Nallamilli
4)Dr. Siva Mahesh Tangutooru
5)Dr. Vishwa Pria Podduturi

(57) Abstract :
The present invention relates to a stable oleoresin emulsion. The present invention more particularly relates to a method of preparation of stable Oil in Water (O/W) emulsion of Black Pepper Oleoresin (BPO) using natural emulsifiers and natural stabilizing agents. BPO is a combination of essential oils and resin, which are responsible for the total flavour profile and pungency of black pepper respectively. These essential oils and resin are not easily dispersible into aqueous food products due to the presence of hydrophobic components and highly viscous resins. BPO in the form of an emulsion-based carrier system is an effective method for enhancing its bioavailability, shelf life and dispersibility for incorporation into Ready to Eat Ready to Cook foods.

No. of Pages : 15 No. of Claims : 6

(12) PATENT APPLICATION PUBLICATION
(21) Application No.202441035600 A
(19) INDIA
(22) Date of filing of Application :03/05/2024
(43) Publication Date : 07/11/2025

(54) Title of the invention : SMART DELIVERY BOX WITH PASSIVE HEATING AND COOLING

(51) International classification	:F25D0017060000, G01R0031280000, A61B0090000000, F24F0011770000, F25D0011020000
(31) Priority Document No	:NA
(32) Priority Date	:NA
(33) Name of priority country	:NA
(86) International Application No	:NA
Filing Date	:NA
(87) International Publication No	: NA
(61) Patent of Addition to Application Number	:NA
Filing Date	:NA
(62) Divisional to Application Number	:NA
Filing Date	:NA

(71)**Name of Applicant :**
1)L&T TECHNOLOGY SERVICES LIMITED
Address of Applicant :DLF IT SEZ Park, 2nd Floor – Block 3, 1/124, Mount Poonamallee Road, Ramapuram, Chennai - 600 089, Tamil Nadu, India Chennai Tamil Nadu India
(72)**Name of Inventor :**
1)SOUGAT KUMAR MANDAL
2)KUNAL GOYAL

(57) Abstract :
The present invention relates generally to food containers, and more particularly to method for controlling temperature in smart delivery box with passive heating and cooling. The method for controlling temperature in smart delivery box with passive heating and cooling, the smart delivery box having main body housing cooling chamber and heating chamber, each designed to maintain specific temperatures suitable for payloads stored therein, the method comprises determining optimal temperatures for cooling and heating chamber, monitoring actual temperatures of the cooling and heating chamber using respective temperature sensors. Further, method discloses comparing actual temperatures of cooling and heating chamber with their respective optimal temperatures. Finally, method discloses selectively activating first blower of cooling chamber to cool cooling chamber when actual temperature of the cooling chamber is greater than optimal temperature of cooling chamber and activating second blower of heating chamber to heat-up the heating chamber when actual temperature of heating chamber is less than optimal temperature of heating chamber.

No. of Pages : 36 No. of Claims : 10

(12) PATENT APPLICATION PUBLICATION
(21) Application No.202441035627 A
(19) INDIA
(22) Date of filing of Application :06/05/2024
(43) Publication Date : 07/11/2025

(54) Title of the invention : SYSTEM FOR MONITORING AND HEATING A GLAZING

(51) International classification :H05B3/84
(31) Priority Document No :NA
(32) Priority Date :NA
(33) Name of priority country :NA
(86) International Application No :NA
Filing Date :NA
(87) International Publication No : NA
(61) Patent of Addition to Application Number :NA
Filing Date :NA
(62) Divisional to Application Number :NA
Filing Date :NA

(71)**Name of Applicant :**
1)SAINT-GOBAIN GLASS FRANCE
Address of Applicant :Tour Saint-Gobain, 12 Place de l'iris, 92400 Courbevoie, France France
(72)**Name of Inventor :**
1)SANKAR, Vetrivel
2)Robin C Jayaram
3)THANGAMANI, Arunvel

(57) Abstract :
The system comprises a laminated glazing (102), a waveguide (104) configured to transmit acoustic or radio waves, a transducer (106) connected to the waveguide, a power unit (108) configured to supply electric power to the transducer (106), and a control unit (110) comprising a microcontroller (202). The transducer (106) is configured to generate acoustic or radio waves and receive reflected acoustic or radio waves. Further, the control unit (110) is connected to the transducer (106) and configured to determine defects or temperature on the laminated glazing (102) by processing the reflected acoustic or radio waves and operate the waveguide (104) to heat at least a portion of the laminated glazing (102) using the waveguide (104).

No. of Pages : 19 No. of Claims : 10

(12) PATENT APPLICATION PUBLICATION
(21) Application No.202441035629 A
(19) INDIA
(22) Date of filing of Application :06/05/2024
(43) Publication Date : 07/11/2025

(54) Title of the invention : "CLUTCH PEDAL OVERIDING INDICATION DEVICE AND OPERATION METHOD THEREOF"

(51) International classification	:B60K0023020000, F16D0048020000, F16D0048040000, B60N0002000000, G05G0001460000	(71)**Name of Applicant :** **1)Tractors and farm Equipment Ltd** Address of Applicant :R&D, Huzur Garden, Sembiyam, Chennai Tamil Nadu India 600011 Sembiyam, Chennai Tamil Nadu India (72)**Name of Inventor :** **1)Mr. Sriraman Sethuraman** **2)Mr. Subbaiah Yegateela** **3)3. Mr. Arunprasad Chandran** **4)Mr. Srinivasan Pandarinathan**
(31) Priority Document No	:NA	
(32) Priority Date	:NA	
(33) Name of priority country	:NA	
(86) International Application No	:NA	
Filing Date	:NA	
(87) International Publication No	: NA	
(61) Patent of Addition to Application Number	:NA	
Filing Date	:NA	
(62) Divisional to Application Number	:NA	
Filing Date	:NA	

(57) Abstract :
CLUTCH PEDAL OVERIDING INDICATION DEVICE AND OPERATION METHOD THEREOF ABSTRACT The present invention discloses an overriding indication device (100), comprising COIS (101), sensor-A (102),sensor-B (103),stopper bolt (104), linkage bracket (105),indicator (3), and clutch pedal (4), the COIS (101) is mounted horizontally between a stopper bolt (104), a linkage bracket (105) and indicator in the clutch pedal (4) within the vehicle clutch system, sensor-a (102) remains in an off state when no external force is applied to the switch's actuator (3), sensor-b (103) remains in an on state when external force is applied to the switch's actuator (3), once the signal from the COIS (101) is disconnected due to the elimination of the gap between the stopper bolt (104) and the linkage bracket (2), the indicator alerts the user. Figure: 1 & 5

No. of Pages : 20 No. of Claims : 7

(12) PATENT APPLICATION PUBLICATION
(21) Application No.202441035672 A
(19) INDIA
(22) Date of filing of Application :06/05/2024
(43) Publication Date : 07/11/2025

(54) Title of the invention : LIGHT ACTIVATING SOUND DETECTING SWITCH

(51) International classification	:A63C0001280000, F24D0019100000, H01L0021762000, A61B0008000000, H04R0019040000
(31) Priority Document No	:NA
(32) Priority Date	:NA
(33) Name of priority country	:NA
(86) International Application No	:NA
Filing Date	:NA
(87) International Publication No	: NA
(61) Patent of Addition to Application Number	:NA
Filing Date	:NA
(62) Divisional to Application Number	:NA
Filing Date	:NA

(71)**Name of Applicant :**
1)B.THARANI
Address of Applicant :ASSISTANT PROFESSOR, DEPARTMENT OF ELECTRICAL AND ELECTRONICS ENGINEERING, SRI SHAKTHI INSTITUTE OF ENGINEERING AND TECHNOLOGY, SRI SHAKTHI NAGAR, L&T BY PASS, CHINNIYAMPALAYAM POST, COIMBATORE-641062. Tamil Nadu India
2)SHRINIDHI.B.S
3)VISHALI.R
4)KEERTHIKA .B
5)PRIYA DHARSHINI.S
(72)**Name of Inventor :**
1)B.THARANI
2)SHRINIDHI.B.S
3)VISHALI.R
4)KEERTHIKA .B
5)PRIYA DHARSHINI.S

(57) Abstract :
This project is of clap switch devices clap switch is a switch which can switch on/off any electrical circuit by the sound of the clap the basic idea of clap switch is that the electric microphone picks up the sound of your clap, cough or by snap the fingers. The sound energy converted into electrical energy this circuit has been constructed using basic electronic components like Arduino uno, sound sensor and relay with the ac supply The circuit will turn on lights for the first two claps for the next two claps the lights turn off. The sound of clap is received by a small microphone the sound sensor changes sound wave in to electrical wave which is further sent to the Arduino uno board and the Arduino works on the basis of the code given by us and transfer it to the relay which turns on and off according to the clap. Clapping hands basically produces 2200hz to 2800hz range and the total time taken for the circuit will be up to 3 seconds .

No. of Pages : 10 No. of Claims : 3

(12) PATENT APPLICATION PUBLICATION
(21) Application No.202441035716 A
(19) INDIA
(22) Date of filing of Application :06/05/2024
(43) Publication Date : 07/11/2025

(54) Title of the invention : ADAPTIVE CRUISE CONTROL SYSTEM, VEHICLE AND METHOD FOR OPERATING A VEHICLE

(51) International classification	:B60W0030160000, B60W0030140000, B60K0031000000, B60W0010060000, B60W0010040000
(31) Priority Document No	:NA
(32) Priority Date	:NA
(33) Name of priority country	:NA
(86) International Application No	:NA
Filing Date	:NA
(87) International Publication No	: NA
(61) Patent of Addition to Application Number	:NA
Filing Date	:NA
(62) Divisional to Application Number	:NA
Filing Date	:NA

(71)**Name of Applicant :**
1)ZF CV Systems Global GmbH
Address of Applicant :Giacomettistr. 1, 3006 Bern, Switzerland Switzerland
(72)**Name of Inventor :**
1)MUTHUKUMARAN, ArunKumar

(57) Abstract :
ABSTRACT ADAPTIVE CRUISE CONTROL SYSTEM, VEHICLE AND METHOD FOR OPERATING A VEHICLE The disclosure relates to an adaptive cruise control system (24) for a vehicle (10), preferably a commercial vehicle (11). The adaptive cruise control system (24) is configured to control (33) a speed (26) of the vehicle (10). The adaptive cruise control system (24) is configured to deter-mine (42) a first target driving speed (44) and to control (34) the vehicle (10) to accelerate (36) if the speed (26) of the vehicle (10) is below the first target driving speed (44). The adaptive cruise control system (24) is configured to determine (48) a distance (30) of the vehicle (10) to a second vehicle (28) driving in front of the vehicle (10) and to control (38) the vehicle (10) to decelerate (40) if the distance (30) is below a predetermined distance (52) even if the speed (26) of the vehicle (10) is below the first target driving speed (44). The adaptive cruise control sys-tem (24) is configured to determine (56) if the vehicle (10) is driving (58) on or changing (60) to a lane (20) of a predetermined lane type (62) and to discontinue (64) controlling (34) the vehicle (10) to accelerate (36) if the speed (26) of the vehicle (10) is below the first target driving speed (44) if the vehicle (10) is driving (58) on or changing (60) to a lane (20) of the predetermined lane type (62). Fig. 1

No. of Pages : 21 No. of Claims : 14

(12) PATENT APPLICATION PUBLICATION
(21) Application No.202441035722 A
(19) INDIA
(22) Date of filing of Application :06/05/2024
(43) Publication Date : 07/11/2025

(54) Title of the invention : DEVELOPMENT OF DOUBLED HAPLOID IN POACEAE PLANTS

(51) International classification	:A01H0004000000, G06Q0030020000, C12N0015820000, A01H0001080000, A61P0043000000	(71)**Name of Applicant :** **1)RASI SEEDS (P) LTD.** Address of Applicant :Rasi Enclave, GreenFields,737 C, Puliyakulam Road, Coimbatore – 641045, Tamil Nadu, India Coimbatore Tamil Nadu India
(31) Priority Document No	:NA	(72)**Name of Inventor :** **1)Prabha Jayaraman**
(32) Priority Date	:NA	**2)Duraikumar Palanisamy**
(33) Name of priority country	:NA	**3)Saravanakumar Marappan**
(86) International Application No	:NA	**4)Bramareswara Rao**
Filing Date	:NA	**5)Vaibhav Pathak**
(87) International Publication No	: NA	**6)Subramanian Vaidyanathan**
(61) Patent of Addition to Application Number	:NA	**7)Muthu Gounder Ramasami**
Filing Date	:NA	
(62) Divisional to Application Number	:NA	
Filing Date	:NA	

(57) Abstract :
DEVELOPMENT OF DOUBLED HAPLOID IN POACEAE PLANTS The present invention provides a protocol for the development of doubled haploids (DH) in plants belonging to the Poaceae family, preferably plants of Pennisetum genus, including but not limited to Pennisetum glaucum, through anther culture. Said protocol comprises use of selective and specific conditions and media composition including hormones for optimal DH plant production in large numbers. Said protocol is short and reliable for DH plant production from spikelet to anther initiation and incubation conditions for high frequency androgenesis in Poaceae plants such as pearl millet, thereby resulting in crop improvement and strengthening the germplasm of the crop. This enables the development of pure lines, i.e., anther to plant, within 65-90 days.

No. of Pages : 24 No. of Claims : 11

(12) PATENT APPLICATION PUBLICATION
(19) INDIA
(22) Date of filing of Application :06/05/2024
(21) Application No.202441035759 A
(43) Publication Date : 07/11/2025

(54) Title of the invention : A HEAT EXCHANGER

(51) International classification	:H01M0008025800, F28F0009020000, F28D0009000000, F28D0021000000, F28D0007160000
(31) Priority Document No	:NA
(32) Priority Date	:NA
(33) Name of priority country	:NA
(86) International Application No	:NA
Filing Date	:NA
(87) International Publication No	: NA
(61) Patent of Addition to Application Number	:NA
Filing Date	:NA
(62) Divisional to Application Number	:NA
Filing Date	:NA

(71)**Name of Applicant :**
1)VALEO SYSTÉMES THERMIQUES
Address of Applicant :8, rue Louis Lormand, 78320 La Verrière, France. La Verrière France
(72)**Name of Inventor :**
1)PUTTA, Srikanth
2)FURSULE, Sagar
3)HOLKAR, Pradeep

(57) Abstract :
ABSTRACT A HEAT EXCHANGER A heat exchanger system (100) includes a base plate (10), a channel plate (20) abutting the base plate (10), an inlet nozzle (24) and an outlet nozzle (26). The channel plate (20) includes first channels protruding in a first direction defining first fluid flow passages between the base plate and the channel plate. The inlet nozzle (24) and the outlet nozzle (26) allow for ingress and egress of fluid respectively into the heat exchanger (100) through the first channels (22). A portion of the base plate (10) comprises one or more second channels (12) protruding in a second direction opposite to the first direction. The second channels (12) define second fluid flow passages between the base plate (10) and the channel plate (20) for configuring fluid communication between at least one first channel (22) and the outlet nozzle (26). FIGURE OF ABSTRACT: FIG. 2

No. of Pages : 23 No. of Claims : 10

(12) PATENT APPLICATION PUBLICATION
(21) Application No.202441035853 A
(19) INDIA
(22) Date of filing of Application :06/05/2024
(43) Publication Date : 07/11/2025

(54) Title of the invention : "CELL SELECTION OPTIMIZATION IN TERRESTRIAL NETWORK -NON-TERRESTRIAL NETWORK"

(51) International classification	:H04B0007185000, H04L0005140000, H04W0048160000, H04W0084060000, H04W0048180000	(71)**Name of Applicant :** **1)SAMSUNG ELECTRONICS CO., LTD** Address of Applicant :129, Samsung-ro Yeongtong-gu, Suwon-si, Gyeonggi-do - Republic of Korea 443-742 Republic of Korea (72)**Name of Inventor :** **1)Amit Anandrao Dange** **2)Nishant** **3)Vivek Murugaiyan** **4)Kailash Kumar Jha**
(31) Priority Document No	:NA	
(32) Priority Date	:NA	
(33) Name of priority country	:NA	
(86) International Application No	:NA	
Filing Date	:NA	
(87) International Publication No	: NA	
(61) Patent of Addition to Application Number	:NA	
Filing Date	:NA	
(62) Divisional to Application Number	:NA	
Filing Date	:NA	

(57) Abstract :
ABSTRACT "CELL SELECTION OPTIMIZATION IN TERRESTRIAL NETWORK -NON-TERRESTRIAL NETWORK" Embodiments disclosed herein provide a method for cell selection optimization in terrestrial network (TN)- Non-terrestrial network (NTN) by a UE (100). The method includes detecting whether the UE (100) is moving from a TN coverage area of the TN to a NTN coverage area. The NTN coverage area has limited coverage or no coverage to the TN. Further, the method includes detecting and camping on to a NTN cell of the NTN. Further, the method includes prioritizing the plurality of Frequency Division Duplexing (FDD) bands over a plurality of Time-division duplexing (TDD) bands supported by a plurality of TN cells for scanning in a subsequent background search. Further, the method includes selecting at least one FDD band from the plurality of the FDD bands supported by the plurality of TN cells. Further, the method includes prioritizing scanning of the plurality of the FDD bands in the subsequent background search. FIG. 10

No. of Pages : 57 No. of Claims : 14

(12) PATENT APPLICATION PUBLICATION
(21) Application No.202441035959 A
(19) INDIA
(22) Date of filing of Application :06/05/2024
(43) Publication Date : 07/11/2025

(54) Title of the invention : SYSTEMS AND METHODS FOR STANDARDIZING DEFINITION OF SOFTWARE ARCHITECTURES

(51) International classification	:G06F0016242000, G06F0008200000, G06F0008100000, G06F0008360000, H04N0005760000
(31) Priority Document No	:NA
(32) Priority Date	:NA
(33) Name of priority country	:NA
(86) International Application No	:NA
Filing Date	:NA
(87) International Publication No	: NA
(61) Patent of Addition to Application Number	:NA
Filing Date	:NA
(62) Divisional to Application Number	:NA
Filing Date	:NA

(71)**Name of Applicant :**
1)Facets Cloud Inc.
Address of Applicant :16192 Coastal Highway, Lewes, Delaware 19958, County of Sussex, USA U.S.A.
(72)**Name of Inventor :**
1)Anshul Sao
2)Pravanjan Choudhury
3)Rohit Raveendran

(57) Abstract :
A system for standardizing the definition of a software architecture is provided. The system includes a customizable domain specific language (DSL) configured to define a structure and one or more architectural components of the software architecture and a catalogue having one or more resources that are customizable based on the defined structure of the software architecture. The system further includes a web interface communicatively coupled to an interpreter. The web interface is configured to translate the domain specific language (DSL) to a visual representation and enable creation of standardized visual representations of the software architecture. Each visual representation includes one or more resources of the catalogue arranged in accordance with the structure of the software architecture. FIG. 2

No. of Pages : 29 No. of Claims : 20

(12) PATENT APPLICATION PUBLICATION
(21) Application No.202441036037 A
(19) INDIA
(22) Date of filing of Application :06/05/2024
(43) Publication Date : 07/11/2025

(54) Title of the invention : AN IMPROVED PROCESS FOR THE PREPARATION OF TAPINAROF AND ITS INTERMEDIATES

(51) International classification	:A61K9/00, A61K9/06, A61K31/05, A61K31/517, A61K31/444, A61P17/04, C07D207/333, C07C45/64	(71)**Name of Applicant :** **1)Optimus Drugs Pvt Ltd** Address of Applicant :Optimus Drugs Pvt Ltd 7th Floor, Maximus Towers, 2A, Raheja Mindspace IT Park, Madhapur, Hitech City, Hyderabad-500081, Telangana, India Hyderabad Telangana India (72)**Name of Inventor :** **1)Dr. N.A. Vekariya** **2)Peketi, Subba Reddy** **3)Vedururi, Madhava Reddy**
(31) Priority Document No	:NA	
(32) Priority Date	:NA	
(33) Name of priority country	:NA	
(86) International Application No	:NA	
Filing Date	:NA	
(87) International Publication No	: NA	
(61) Patent of Addition to Application Number	:NA	
Filing Date	:NA	
(62) Divisional to Application Number	:NA	
Filing Date	:NA	

(57) Abstract :
TITLE: AN IMPROVED PROCESS FOR THE PREPARATION OF TAPINAROF AND ITS INTERMEDIATES The present invention relates to an improved process for the preparation of Tapinarof and a process for the preparation of Tapinarof intermediates.

No. of Pages : 18 No. of Claims : 9

(12) PATENT APPLICATION PUBLICATION
(21) Application No.202441036038 A
(19) INDIA
(22) Date of filing of Application :06/05/2024
(43) Publication Date : 07/11/2025

(54) Title of the invention : PROCESS FOR THE PREPARATION OF MIROGABALIN BESYLATE

(51) International classification	: C07C51/00, C07B57/00, C07C55/30, C07C227/22, C07C229/28, C07D221/20	(71)**Name of Applicant :** **1)Optimus Drugs Pvt Ltd** Address of Applicant :Optimus Drugs Pvt Ltd 7th Floor, Maximus Towers, 2A, Raheja Mindspace IT Park, Madhapur, Hitech City, Hyderabad-500081, Telangana, India Hyderabad Telangana India (72)**Name of Inventor :** **1)Dr. N.A. Vekariya** **2)Peketi, Subba Reddy** **3)Donta, Suresh**
(31) Priority Document No	:NA	
(32) Priority Date	:NA	
(33) Name of priority country	:NA	
(86) International Application No	:NA	
Filing Date	:NA	
(87) International Publication No	: NA	
(61) Patent of Addition to Application Number	:NA	
Filing Date	:NA	
(62) Divisional to Application Number	:NA	
Filing Date	:NA	

(57) Abstract :
Title: PROCESS FOR THE PREPARATION OF MIROGABALIN BESYLATE The present invention relates a process for the preparation of Mirogabalin Besylate with high yield and purity.

No. of Pages : 22 No. of Claims : 8

(12) PATENT APPLICATION PUBLICATION
(21) Application No.202443034749 A
(19) INDIA
(22) Date of filing of Application :01/05/2024
(43) Publication Date : 07/11/2025

(54) Title of the invention : UTILITY BOX FOR A TWO WHEELED VEHICLE

(51) International classification	:F16H0057021000, F16H0001280000, H01L0021677000, F04D0029420000, F16H0003720000
(31) Priority Document No	:NA
(32) Priority Date	:NA
(33) Name of priority country	:NA
(86) International Application No	:NA
Filing Date	:NA
(87) International Publication No	: NA
(61) Patent of Addition to Application Number	:
Filed on	:01/01/1900
(62) Divisional to Application Number	:NA
Filing Date	:NA

(71)**Name of Applicant :**
1)TVS Motor Company Limited,
Address of Applicant :TVS Motor Company Limited, “Chaitanya”, No.12 Khader Nawaz Khan Road, Nungambakkam Tamil Nadu India
(72)**Name of Inventor :**
1)BURRA TIRUMALA SRIKAR
2)AMIT DILIP RAJWADE
3)KIRAN PAYANGAPPADAN
4)CLYDE BOSCO DSILVA
5)SELVARAJ PRADEEP
6)APPANNA NADAGERAPPA PUJARI

(57) Abstract :
A transmission system (100) of a vehicle. The transmission system comprising a transmission casing (104), and a motor casing (102). The transmission casing (104) being configured to secure and cover one or more reduction gears (304) of the transmission system (100). The motor casing (102) being configured to cover an electric motor (300) of the vehicle. The electric motor (300) comprising a motor shaft (302), wherein a motive force being transferred from the motor shaft (302) to the one or more reduction gears (304) for providing a motion to a rear wheel of the vehicle. The transmission casing (104) comprising an inner transmission casing (104) and an outer transmission casing (104b). The motor casing (102) and the outer transmission casing (104b) being configured to form an oil chamber (400).

No. of Pages : 28 No. of Claims : 18

(12) PATENT APPLICATION PUBLICATION
(21) Application No.202444035663 A
(19) INDIA
(22) Date of filing of Application :06/05/2024
(43) Publication Date : 07/11/2025

(54) Title of the invention : LIGHTWEIGHT REACTIVE POWDER CONCRETE

(51) International classification	:C04B0028040000, C04B0028020000, C04B0111000000, C04B0040020000, C04B0018140000
(31) Priority Document No	:US10077210B2
(32) Priority Date	:02/05/2024
(33) Name of priority country	:India
(86) International Application No	:NA
Filing Date	:NA
(87) International Publication No	: NA
(61) Patent of Addition to Application Number	:NA
Filing Date	:NA
(62) Divisional to Application Number	:NA
Filing Date	:NA

(71)**Name of Applicant :**
1)Karpagam College of Engineering
Address of Applicant :Department of Civil Engineering, Karpagam College of Engineering, Coimbatore - 32. Coimbatore Tamil Nadu India
(72)**Name of Inventor :**
1)P. JEGANMURUGAN
2)G. BADMA SRI
3)K. JEEVA MATHIMARAN
4)R. KARTHICKRAJA
5)G. KARTHIGEYAN

(57) Abstract :
Reactive Powder Concrete (RPC) is known as a high strength, high durable concrete made by using fine powder materials, having a particle size less than 0.001mm (1µ). Lightweight reactive powder concrete contains Cement, Silica fume, Quartz sand, super plasticizer, fly ash and Quartz powder with low water cement ratio under special curing condition. Mix proportion of lightweight reactive powder concrete were identified by trial-and-error method, the size of concrete cube is 100mm X 100mm X 100mm were cast for finding compressive strength at 7, 14, and 28 days. By introducing aeration into RPC, the self-weight getting reduced and it is turned into lightweight reactive powder concrete.

No. of Pages : 11 No. of Claims : 5

(12) PATENT APPLICATION PUBLICATION
(21) Application No.202444035664 A
(19) INDIA
(22) Date of filing of Application :06/05/2024
(43) Publication Date : 07/11/2025

(54) Title of the invention : QUARRY DUST AND GGBS IN CONCRETE

(51) International classification	:C04B0028020000, C04B0111000000, C04B0040000000, G01N0033380000, C04B0028000000
(31) Priority Document No	:ES2837559T3
(32) Priority Date	:02/05/2024
(33) Name of priority country	:India
(86) International Application No	:NA
Filing Date	:NA
(87) International Publication No	: NA
(61) Patent of Addition to Application Number	:NA
Filing Date	:NA
(62) Divisional to Application Number	:NA
Filing Date	:NA

(71)**Name of Applicant :**
1)Karpagam College of Engineering
Address of Applicant :Dept. of Civil Engineering, Karpagam College of Engineering, Coimbatore - 32. Coimbatore Tamil Nadu India
(72)**Name of Inventor :**
1)B.T. USHA PRIYA
2)M. PANDIAYYAPPAN
3)A. VASANTHAN
4)S. BOOPATHI
5)K. RISANTH

(57) Abstract :
Concrete is been used for wide varieties of purpose to make it suitable in different conditions. In these conditions ordinary concrete may fails to exhibits the required durability. admixtures are added to modify the properties of concrete. The replacement of cement with admixture such as GGBS will reduce the unit water content necessary to obtain the same slump. The use of GGBS reduces the heat of hydration and reduces the permeabilities to the external agencies. The fine aggregate is been replaced by quarry dust. Quarry dust is often less expensive than natural sand, making it an attractive option for reducing construction costs. Using quarry dust as a replacement for sand reduces the demand for natural resources and helps in the sustainable utilization of quarry waste. Quarry dust can improve the workability of concrete mixtures due to its finer particle size and angular shape, which can enhance the packing density of the concrete mixture. Quarry dust can contribute to the strength and durability of concrete when properly proportioned and mixed. It can fill voids in the concrete matrix and improve the bond between aggregate particles and cement paste. Incorporating quarry dust in concrete mixtures can reduce the shrinkage potential of concrete, leading to improved dimensional stability over time.

No. of Pages : 11 No. of Claims : 3

(12) PATENT APPLICATION PUBLICATION
(21) Application No.202444041912 A
(19) INDIA
(22) Date of filing of Application :30/05/2024
(43) Publication Date : 07/11/2025

(54) Title of the invention : SAFETRACK: SAFE ROUTE RECOMMENDATION SYSTEM

(51) International classification	:G01C0021340000, G06N0020000000, G01C0021360000, G06Q0010040000, G08G0001096700
(31) Priority Document No	:US7290334B2
(32) Priority Date	:02/05/2024
(33) Name of priority country	:India
(86) International Application No	:NA
Filing Date	:NA
(87) International Publication No	: NA
(61) Patent of Addition to Application Number	:NA
Filing Date	:NA
(62) Divisional to Application Number	:NA
Filing Date	:NA

(71)**Name of Applicant :**
1)Karpagam College of engineering
Address of Applicant :Dept. of Artificial Intelligence and Data Science Karpagam College of Engineering, Coimbatore Coimbatore Tamil Nadu India
(72)**Name of Inventor :**
1)SATHYA K
2)BARATHSURYA A S
3)DHINESH E
4)HARIWARSHHAN M

(57) Abstract :
This patent describes a new method for improving individual traveler safety and route optimization in urban settings. By combining the latest analytics and machine learning algorithms to suggest routes that reduce potential safety concerns, SAFETRACK promotes user well-being above standard navigation systems, which place an emphasis on efficiency over safety.To evaluate the safety of possible travel routes, the system makes use of a large dataset that includes past criminal incidences, accident reports, traffic patterns, road conditions, and environmental elements. Through the analysis of this dataset and the application of predictive modeling techniques, SAFETRACK is able to assess the safety hazards associated with various routes and produce customized route recommendations based on the preferences and safety concerns of each individual user.Multi-criteria optimization, which measures safety issues against variables like trip time and distance, and personalized route recommendations, which provide users the power to choose their own routes, are two of SAFETRACK's key features. SAFETRACK is a major navigation technology innovation that provides a proactive approach to address safety concerns related to urban mobility. The purpose of this patent application is to secure the latest methods and technology that reinforce SAFETRACK, assuring its growth and beneficial effects on urban settings

No. of Pages : 18 No. of Claims : 2

(12) PATENT APPLICATION PUBLICATION
(21) Application No.202544033962 A
(19) INDIA
(22) Date of filing of Application :07/04/2025
(43) Publication Date : 07/11/2025

(54) Title of the invention : RECONFIGURABLE INTELLIGENT SURFACE BASED COMMUNICATION

(51) International classification	:H04B0007060000, H04B0007040000, H04B0007041300, H04L0005000000, G06F0011200000
(31) Priority Document No	:2406194.7
(32) Priority Date	:03/05/2024
(33) Name of priority country	:U.K.
(86) International Application No	:NA
Filing Date	:NA
(87) International Publication No	: NA
(61) Patent of Addition to Application Number	:NA
Filing Date	:NA
(62) Divisional to Application Number	:NA
Filing Date	:NA

(71)**Name of Applicant :**
1)Nokia Technologies Oy
Address of Applicant :Karakaari 7, 02610 Espoo, Finland Finland
(72)**Name of Inventor :**
1)Marjo HEIKKILÄ
2)Muhammad TAYYAB

(57) Abstract :
ABSTRACT RECONFIGURABLE INTELLIGENT SURFACE BASED COMMUNICATION Example embodiments of the present disclosure relate to a solution for reconfigurable intelligent surface (RIS)-based communication. A method comprises receiving, from a second apparatus, configuration information indicating at least one of the following: at least one first resource on which the first apparatus is configured to support communications with a first service type, at least one second resource on which the first apparatus is not allowed to support communications with a first service type; and receiving, from a third apparatus, a request for a transmission with the first service type between the third apparatus and a fourth apparatus and via at least the first apparatus; and transmitting, to the third apparatus, a response of the request indicating whether the request is accepted or rejected by the first apparatus.

No. of Pages : 46 No. of Claims : 14

(12) PATENT APPLICATION PUBLICATION
(19) INDIA
(22) Date of filing of Application :10/04/2025
(21) Application No.202544035173 A
(43) Publication Date : 07/11/2025

(54) Title of the invention : FREQUENCY SCALING IN MULTI-TENANT ENVIRONMENTS

(51) International classification :G06F0009480000, G06F0009500000, G06F0013160000, G06F0021550000, G06F0011340000
(31) Priority Document No :63/643,120
(32) Priority Date :06/05/2024
(33) Name of priority country :U.S.A.
(86) International Application No :NA
Filing Date :NA
(87) International Publication No : NA
(61) Patent of Addition to Application Number :NA
Filing Date :NA
(62) Divisional to Application Number :NA
Filing Date :NA

(71)**Name of Applicant :**
1)Intel Corporation
Address of Applicant :2200 Mission College Boulevard, Santa Clara, California 95054, USA U.S.A.
(72)**Name of Inventor :**
1)Chris MACNAMARA
2)John J. BROWNE
3)Nilanjan PALIT
4)Chetan HIREMATH
5)Rory SEXTON
6)Conor WALSH
7)Kevin LAATZ
8)Andriy GLUSTSOV
9)Peter McCARTHY
10)Katelyn DONNELLAN
11)Vishal DEEP AJMERA
12)David HUNT
13)Gordon NOONAN

(57) Abstract :
Examples described herein relate to circuitry to: monitor utilization data for a plurality of processes; determine one or more priority levels associated with at least one of the plurality of processes based on policy parameters; and adjust a frequency of operation of the interface circuitry based on the monitored utilization data and the determined priority levels of the processes. In some examples, adjust the frequency of operation of the interface circuitry is to prioritize frequency of operation requested by a higher priority workload over a frequency of operations requested by a lower priority workload.

No. of Pages : 50 No. of Claims : 20

(12) PATENT APPLICATION PUBLICATION
(21) Application No.202544040296 A
(19) INDIA
(22) Date of filing of Application :25/04/2025
(43) Publication Date : 07/11/2025

(54) Title of the invention : NETWORK ENERGY SAVING

(51) International classification	:H04W0052020000, H04W0072210000, H04W0072230000, H04W0056000000, H04W0072270000
(31) Priority Document No	:2406131.9
(32) Priority Date	:02/05/2024
(33) Name of priority country	:U.K.
(86) International Application No	:NA
Filing Date	:NA
(87) International Publication No	: NA
(61) Patent of Addition to Application Number	:NA
Filing Date	:NA
(62) Divisional to Application Number	:NA
Filing Date	:NA

(71)**Name of Applicant :**
1)Nokia Technologies Oy
Address of Applicant :Karakaari 7, 02610 Espoo, Finland Finland
(72)**Name of Inventor :**
1)Dileep KUMAR
2)Muhammad TAYYAB

(57) Abstract :
ABSTRACT NETWORK ENERGY SAVING A method, apparatus and computer program is described comprising: receiving a network function request; receiving a request from a base station to allow the base station to use an energy saving mode; determining whether to allow the base station to use an energy saving mode of one or more energy saving modes, wherein the one or more energy saving modes comprise at least a first energy saving mode; responsive to determining to not allow the base station to use an energy saving mode of the one or more energy saving modes, rejecting the request to allow the base station to use an energy saving mode; responsive to determining to allow the base station to use the first energy saving mode, providing to the base station an indication of second base station specific duration, wherein the base station is permitted to use the first energy saving mode during the second base station specific duration; and, responsive to providing to the base station an indication of a second base station specific duration, rejecting the network function request for the second base station specific duration. (FIG. 4)

No. of Pages : 43 No. of Claims : 17

(12) PATENT APPLICATION PUBLICATION
(21) Application No.202544040809 A
(19) INDIA
(22) Date of filing of Application :28/04/2025
(43) Publication Date : 07/11/2025

(54) Title of the invention : DESICCANT SHIPPING CAP

(51) International classification	:B01D0053260000, F28F0009020000, B65D0081260000, H10K0050840000, F16M0013020000
(31) Priority Document No	:63/640,994
(32) Priority Date	:01/05/2024
(33) Name of priority country	:U.S.A.
(86) International Application No	:NA
Filing Date	:NA
(87) International Publication No	: NA
(61) Patent of Addition to Application Number	:NA
Filing Date	:NA
(62) Divisional to Application Number	:NA
Filing Date	:NA

(71)**Name of Applicant :**
1)MAHLE INTERNATIONAL GmbH
Address of Applicant :Pragstrasse 26-46, 70376, Stuttgart, Germany Germany
(72)**Name of Inventor :**
1)MORAN, Steven

(57) Abstract :
An apparatus and method for transportation and storage of equipment is disclosed herein. The apparatus consists of a shipping cap that is configured to be inserted into the inlet and outlet portions of the piece of rotating equipment. The shipping cap is configured to accept a desiccant and insert this desiccant into the inlet and outlet portions of the equipment to prevent moisture intrusion.

No. of Pages : 68 No. of Claims : 12

(12) PATENT APPLICATION PUBLICATION
(21) Application No.202544041206 A
(19) INDIA
(22) Date of filing of Application :29/04/2025
(43) Publication Date : 07/11/2025

(54) Title of the invention : ELECTRICALLY CONDUCTIVE CONTACT ASSEMBLY, MODULE CONNECTOR, CONNECTION ASSEMBLY AND METHOD FOR MECHANICAL FASTENING

(51) International classification	:H01R0012710000, H01M0050502000, H01R0004300000, F16B0004000000, H01R0011120000
(31) Priority Document No	:10 2024 112 514.4
(32) Priority Date	:03/05/2024
(33) Name of priority country	:Germany
(86) International Application No	:NA
Filing Date	:NA
(87) International Publication No	: NA
(61) Patent of Addition to Application Number	:NA
Filing Date	:NA
(62) Divisional to Application Number	:NA
Filing Date	:NA

(71)**Name of Applicant :**
1)TE Connectivity Solutions GmbH
Address of Applicant :Mühlenstrasse 26, 8200 Schaffhausen, Switzerland Switzerland
(72)**Name of Inventor :**
1)EHEIM, Manuel
2)STINE, Adrian
3)HELDMANN, Frank
4)WOLF, Marcus
5)HOFFMANN, Bjoern
6)DISTLER, Patrick
7)BUCHHOLZ, Ron
8)SCHAEFER, Maik

(57) Abstract :
The present invention relates to an electrically conductive contact assembly (100, 100', 100"), wherein the contact assembly (100, 100', 100") comprises a contact element (106), a busbar (102) and a fastening element (110, 110', 110") for mechanically fastening the contact element (106) to the busbar (102). The contact element (106) is configured to be affixed to the busbar (102) in a frictionally engaged manner at least on a first friction surface (120) in the receiving opening (104), and the fastening element (110, 110', 110") comprises a knurled section (138) which is longer in the axial direction (A) or of the same length as the receiving opening (104) of the busbar (102). The knurled section (138) is configured such that the knurled section (138) in the assembled state of the contact assembly (100, 100', 100") exerts a contact force (FK) upon the contact element (106) which presses the first friction surface (120) of the contact element (106) flatly against the inner side of the receiving opening (104) of the busbar (102). Furthermore, the present invention relates to a method for mechanically fastening a contact element (106) to a busbar (102). FIGURE 4

No. of Pages : 25 No. of Claims : 15

(12) PATENT APPLICATION PUBLICATION
(21) Application No.202544041334 A
(19) INDIA
(22) Date of filing of Application :29/04/2025
(43) Publication Date : 07/11/2025

(54) Title of the invention : SUBSTRATE PROCESSING METHOD, SUBSTRATE PROCESSING APPARATUS, AND ARTICLE MANUFACTURING METHOD

(51) International classification	:G03F0009000000, H01L0021670000, H01L0021680000, H01L0021020000, G02B0007020000
(31) Priority Document No	:2024-074512
(32) Priority Date	:01/05/2024
(33) Name of priority country	:Japan
(86) International Application No	:NA
Filing Date	:NA
(87) International Publication No	: NA
(61) Patent of Addition to Application Number	:NA
Filing Date	:NA
(62) Divisional to Application Number	:NA
Filing Date	:NA

(71)**Name of Applicant :**
1)CANON KABUSHIKI KAISHA
Address of Applicant :30-2, Shimomaruko 3-chome, Ohta-ku, Tokyo 146-8501, Japan Japan
(72)**Name of Inventor :**
1)Akifumi Komukai

(57) Abstract :
A substrate processing method includes performing prealignment of a substrate, and performing fine alignment of the substrate after the performing the prealignment, wherein the performing the prealignment includes calculating a plurality of amounts of positional deviation of the substrate in parallel by a plurality of methods, and the performing the fine alignment includes deciding a detection range of a mark formed on the substrate based on the plurality of calculated amounts of positional deviation. [Figure 1]

No. of Pages : 41 No. of Claims : 11

(12) PATENT APPLICATION PUBLICATION
(21) Application No.202544042372 A
(19) INDIA
(22) Date of filing of Application :01/05/2025
(43) Publication Date : 07/11/2025

(54) Title of the invention : LIQUID, AIR, AND SURFACE TREATMENT USING HIGH INTENSITY BROAD-SPECTRUM PULSED LIGHT

(51) International classification	:C02F0001320000, A61L0002100000, A61L0002000000, A24F0040485000, F28F0009240000	(71)**Name of Applicant :** **1)Aruna Inovation LLC** Address of Applicant :12 Maritime Way, Bayonne, NJ 07002, US U.S.A. (72)**Name of Inventor :** **1)Ameet CHAUDHURY**
(31) Priority Document No	:18/651794	
(32) Priority Date	:01/05/2024	
(33) Name of priority country	:U.S.A.	
(86) International Application No	:NA	
Filing Date	:NA	
(87) International Publication No	: NA	
(61) Patent of Addition to Application Number	:NA	
Filing Date	:NA	
(62) Divisional to Application Number	:NA	
Filing Date	:NA	

(57) Abstract :
LIQUID, AIR, AND SURFACE TREATMENT USING HIGH INTENSITY BROAD-SPECTRUM PULSED LIGHT ABSTRACT Liquid, air, or surface treatment/sterilization/disinfection method and system that includes a reactor having a shell, a liquid inlet and a liquid outlet on the shell, tube(s), and light source(s); and a power supply to power the light source(s) to strobe pulsed light with a predetermined fluence or spectrum to eliminate, reduce, degrade, render inert, or nullify the physical, chemical, organic, inorganic, biological, or microbiological contaminants. The light source(s) is provided in the shell such that an internal space is formed between the shell and the tube(s) such that liquid passes through the internal space in a circular motion between the shell and the tube(s) and between the tube(s) from the liquid inlet to the liquid outlet and a portion of the shell is configured to create turbulence of liquid flow in the circular motion between the shell and the tube(s).

No. of Pages : 64 No. of Claims : 20

(12) PATENT APPLICATION PUBLICATION
(21) Application No.202544043633 A
(19) INDIA
(22) Date of filing of Application :05/05/2025
(43) Publication Date : 07/11/2025

(54) Title of the invention : METHODS, APPARATUSES, COMPUTER PROGRAMS AND/OR SYSTEMS FOR NODE SELECTION

(51) International classification	:H04L0009400000, H04L0067100000, H04W0088060000, G06Q0020400000, H04L0067141000
(31) Priority Document No	:2406289.5
(32) Priority Date	:06/05/2024
(33) Name of priority country	:U.K.
(86) International Application No	:NA
Filing Date	:NA
(87) International Publication No	: NA
(61) Patent of Addition to Application Number	:NA
Filing Date	:NA
(62) Divisional to Application Number	:NA
Filing Date	:NA

(71)**Name of Applicant :**
1)Nokia Technologies Oy
Address of Applicant :Karakaari 7, Espoo, 02610, Finland Finland
(72)**Name of Inventor :**
1)Ece GOSHI
2)Afsaneh GHAROUNI
3)Srilatha RAMACHANDRAN

(57) Abstract :
ABSTRACT METHODS, APPARATUSES, COMPUTER PROGRAMS AND/OR SYSTEMS FOR NODE SELECTION There are provided methods, apparatuses and computer program products for node selection, such as node selection for federated learning based on for example receiving federated learning, FL, task information, generating a distributed nodes list indicating distributed nodes for contributing to a requested FL training, and transmitting the distributed nodes list, and updating the stored availability information corresponding to the set of distributed nodes indicated in the distributed nodes list, wherein generating the distributed nodes list is based on a comparison of the characteristics of the requested FL training with stored characteristics of the plurality of distributed nodes and on stored availability information corresponding to the plurality of distributed nodes. [Fig. 1]

No. of Pages : 70 No. of Claims : 22

(12) PATENT APPLICATION PUBLICATION
(21) Application No.202547095702 A
(19) INDIA
(22) Date of filing of Application :06/10/2025
(43) Publication Date : 07/11/2025

(54) Title of the invention : SURROUND FOR A LOUDSPEAKER

(51) International classification	:H04R 7/20, H04R 7/04
(31) Priority Document No	:10 2023 109 979.5
(32) Priority Date	:20/04/2023
(33) Name of priority country	:Germany
(86) International Application No	:PCT/EP2024/060158
Filing Date	:15/04/2024
(87) International Publication No	:WO 2024/218039
(61) Patent of Addition to Application Number	:NA
Filing Date	:NA
(62) Divisional to Application Number	:NA
Filing Date	:NA

(71)**Name of Applicant :**
1)GSS-AUDIO GRAWE-SEEBAUER-SCHNEIDER GDBR
Address of Applicant :Am Neugrund 39 83088 Kiefersfelden Germany
(72)**Name of Inventor :**
1)SEEBAUER, Christian

(57) Abstract :
The invention relates to a surround (10) for a loudspeaker, preferably a planar loudspeaker, having a fastening region (14) extending in a fastening surface (12) and an elongate, preferably rectangular or oval, vibration region (16) arranged within the fastening region (14), wherein the contour of the vibration region (16) is designed such that sections of the vibration region (16) extend on different sides of the fastening surface (12).

No. of Pages : 12 No. of Claims : 9

(12) PATENT APPLICATION PUBLICATION
(21) Application No.202547095774 A
(19) INDIA
(22) Date of filing of Application :06/10/2025
(43) Publication Date : 07/11/2025

(54) Title of the invention : MEASUREMENT DEVICE

(51) International classification	:G01B 5/20, G01B 5/28
(31) Priority Document No	:2023-039051
(32) Priority Date	:13/03/2023
(33) Name of priority country	:Japan
(86) International Application No	:PCT/JP2024/008971
Filing Date	:08/03/2024
(87) International Publication No	:WO 2024/190644
(61) Patent of Addition to Application Number	:NA
Filing Date	:NA
(62) Divisional to Application Number	:NA
Filing Date	:NA

(71)**Name of Applicant :**
1)TOKYO SEIMITSU CO., LTD.
Address of Applicant :2968-2, Ishikawa-machi, Hachioji-shi, Tokyo 1928515 Japan
(72)**Name of Inventor :**
1)MAEDA Kunihiro
2)MORII Hideki

(57) Abstract :
A measurement device (1) comprises: a detector (10) that is accommodated in an internal space of a detector housing (30) and includes an arm part attached so as to be able to oscillate about an oscillation center; a stylus part (14) provided with a stylus for performing measurement of a surface of a measurement object, the stylus part being attached to the arm part and being attached so as to be able to oscillate integrally with the arm part in accordance with the shape of the surface of the measurement object; a first temperature sensor that measures the temperature of the internal space, and a temperature correction unit (102) that corrects the result of measurement of the measurement object on the basis of the temperature, measured by the first temperature sensor, of the internal space during measurement.

No. of Pages : 14 No. of Claims : 4

(12) PATENT APPLICATION PUBLICATION
(21) Application No.202547095775 A
(19) INDIA
(22) Date of filing of Application :06/10/2025
(43) Publication Date : 07/11/2025

(54) Title of the invention : UNMANNED STACKING SYSTEM FOR ALUMINUM ANODE CARBON BLOCK WAREHOUSE

(51) International classification :B65G 57/32
(31) Priority Document No :202310231648.9
(32) Priority Date :10/03/2023
(33) Name of priority country :China
(86) International Application No :PCT/CN2023/138300
Filing Date :13/12/2023
(87) International Publication No :WO 2024/187860
(61) Patent of Addition to Application Number :NA
Filing Date :NA
(62) Divisional to Application Number :NA
Filing Date :NA

(71)**Name of Applicant :**
1)CHINA ALUMINUM INTERNATIONAL ENGINEERING CORPORATION LIMITED
Address of Applicant :Building C, No. 99, Xingshikou Road Haidian District, Beijing 100093 China
(72)**Name of Inventor :**
1)LIU, Jun
2)LU, Hui
3)YANG, Yunchuan
4)YAN, Chaoning

(57) Abstract :
The present invention relates to the technical fields of aluminum electrolysis and carbon, and provides an unmanned stacking system for an aluminum anode carbon block warehouse. The system comprises an intelligent stacking crane device, an intelligent ground conveyor line device, an automatic unloading guidance system, the Internet of Things, a crane dispatching and warehouse management system, and an operation and maintenance terminal. The intelligent stacking crane device is electrically connected to the intelligent ground conveyor line device, the automatic unloading guidance system, the Internet of Things, the crane dispatching and warehouse management system, and the operation and maintenance terminal. By means of the unmanned stacking system for an aluminum anode carbon block warehouse, warehouse operation procedures and service processes are integrated and divided, unmanned driving and intelligent dispatching of stacking cranes are achieved, inventory management of carbon blocks is improved, and intelligent warehouse management of a carbon block transfer station is implemented, so that the requirements of unmanned and intelligent development of enterprise production are met, the enterprise production costs are reduced, and the production efficiency is improved.

No. of Pages : 11 No. of Claims : 6

(12) PATENT APPLICATION PUBLICATION
(21) Application No.202547095791 A
(19) INDIA
(22) Date of filing of Application :06/10/2025
(43) Publication Date : 07/11/2025

(54) Title of the invention : COIL FOR A LOUDSPEAKER

(51) International classification	:H04R 9/04, H04R 9/06, H04R 7/04
(31) Priority Document No	:10 2023 109 977.9
(32) Priority Date	:20/04/2023
(33) Name of priority country	:Germany
(86) International Application No	:PCT/EP2024/060801
Filing Date	:19/04/2024
(87) International Publication No	:WO 2024/218342
(61) Patent of Addition to Application Number	:NA
Filing Date	:NA
(62) Divisional to Application Number	:NA
Filing Date	:NA

(71)**Name of Applicant :**
1)GSS-AUDIO GRAWE-SEEBAUER-SCHNEIDER GDBR
Address of Applicant :Am Neugrund 39 83088 Kiefersfelden Germany
(72)**Name of Inventor :**
1)SEEBAUER, Christian

(57) Abstract :
The invention relates to a coil for a loudspeaker, preferably a planar loudspeaker, having at least one winding (10), wherein the winding (10) extends around a coil core (12), and wherein an outer side of the winding (10) opposite to the coil core (12) has an attachment region (16) for attachment to the loudspeaker.

No. of Pages : 7 No. of Claims : 10

(12) PATENT APPLICATION PUBLICATION
(21) Application No.202547095800 A
(19) INDIA
(22) Date of filing of Application :06/10/2025
(43) Publication Date : 07/11/2025

(54) Title of the invention : ? OPIOID RECEPTOR AGONIST AND USE THEREOF

(51) International classification	:C07K 7/06, A61K 38/08
(31) Priority Document No	:202310371594.6
(32) Priority Date	:10/04/2023
(33) Name of priority country	:China
(86) International Application No	:PCT/CN2024/085849
Filing Date	:03/04/2024
(87) International Publication No	:WO 2024/212865
(61) Patent of Addition to Application Number	:NA
Filing Date	:NA
(62) Divisional to Application Number	:NA
Filing Date	:NA

(71)**Name of Applicant :**
1)CHENGDU AODA BIOTECHNOLOGY CO., LTD
Address of Applicant :Building C1-suite 511, Tianfu Life Science Park, No. 88 Keyuan Nan Road High-tech Zone Chengdu, Sichuan 610041 China
(72)**Name of Inventor :**
1)ZHOU, Shuliang
2)WANG, Peng
3)DENG, Lan

(57) Abstract :
A ? opioid receptor agonist and a stereoisomer and pharmaceutically acceptable salt thereof, having the following structural formula and relating to the technical field of biological medicines. The ? opioid receptor agonist has high selectivity to a ? opioid receptor, the activity of the ? opioid receptor agonist is 3-15 times that of Difelikefalin, the drug activity is high, and the ? opioid receptor agonist can be used for treating and/or relieving pruritus and/or analgesia. D-Phe-AA1-AA2-D-Lys-4-aminopiperidine-4-carboxamide-AA3-AA4-AA5 (Formula I).

No. of Pages : 30 No. of Claims : 10

(12) PATENT APPLICATION PUBLICATION
(21) Application No.202547095871 A
(19) INDIA
(22) Date of filing of Application :06/10/2025
(43) Publication Date : 07/11/2025

(54) Title of the invention : PHYSICAL SIDELINK CONTROL CHANNEL MAPPING FOR INTERLACED RESOURCE BLOCK BASED TRANSMISSION

(51) International classification :H04L 5/00
(31) Priority Document No :NA
(32) Priority Date :NA
(33) Name of priority country :NA
(86) International Application No :PCT/CN2023/093478
Filing Date :11/05/2023
(87) International Publication No :WO 2024/229798
(61) Patent of Addition to Application Number :NA
Filing Date :NA
(62) Divisional to Application Number :NA
Filing Date :NA

(71)**Name of Applicant :**
1)QUALCOMM INCORPORATED
Address of Applicant :5775 Morehouse Drive, San Diego California 92121-1714 U.S.A.
(72)**Name of Inventor :**
1)GUO, Shaozhen
2)XU, Changlong
3)YANG, Luanxia
4)CHEN, Siyi
5)SUN, Jing
6)LIU, Chih-Hao
7)ZHANG, Xiaoxia
8)XU, Hao

(57) Abstract :
Various aspects of the present disclosure generally relate to wireless communication. In some aspects, a user equipment (UE) may receive an interlace configuration for a sidelink resource pool. The UE may transmit a physical sidelink control channel (PSCCH) communication scheduling a physical sidelink shared channel (PSSCH) communication for transmission in the sidelink resource pool, wherein the PSCCH communication is mapped to a set of resources based on a mapping rule in accordance with the interlace configuration. Numerous other aspects are described.

No. of Pages : 49 No. of Claims : 24

(12) PATENT APPLICATION PUBLICATION
(21) Application No.202547095872 A
(19) INDIA
(22) Date of filing of Application :06/10/2025
(43) Publication Date : 07/11/2025

(54) Title of the invention : MITIGATING EFFECTS OF A LINE RESET IN A FLASH MEMORY INTERFACE

(51) International classification	:G06F 1/24
(31) Priority Document No	:NA
(32) Priority Date	:NA
(33) Name of priority country	:NA
(86) International Application No	:PCT/CN2023/094731
Filing Date	:17/05/2023
(87) International Publication No	:WO 2024/234331
(61) Patent of Addition to Application Number	:NA
Filing Date	:NA
(62) Divisional to Application Number	:NA
Filing Date	:NA

(71)**Name of Applicant :**
1)QUALCOMM INCORPORATED
Address of Applicant :Attn: International IP Administration, 5775 Morehouse Drive, San Diego California 92121-1714 U.S.A.
(72)**Name of Inventor :**
1)DAS, Asutosh
2)GUO, Can

(57) Abstract :
An effect of a line reset occurring during a power mode change in a UFS memory system may be mitigated. A UFS memory device may receive a low-power mode request from a host device. The UFS memory device may also receive a reset request. The UFS memory device may enter the low-power mode in response to the low-power mode request. The UFS memory device may provide an indication of an exception event to the host device when the reset request is received and the memory device enters the low-power mode.

No. of Pages : 22 No. of Claims : 30

(12) PATENT APPLICATION PUBLICATION
(21) Application No.202547095873 A
(19) INDIA
(22) Date of filing of Application :06/10/2025
(43) Publication Date : 07/11/2025

(54) Title of the invention : DYNAMIC POLARIZATION COMBINATIONS BASED ON BLOCKAGE SCENARIOS

(51) International classification	:H04B 7/0456, H04B 7/06, H04B 7/08, H04B 7/10
(31) Priority Document No	:18/328703
(32) Priority Date	:02/06/2023
(33) Name of priority country	:U.S.A.
(86) International Application No	:PCT/US2024/025408
Filing Date	:19/04/2024
(87) International Publication No	:WO 2024/248976
(61) Patent of Addition to Application Number	:NA
Filing Date	:NA
(62) Divisional to Application Number	:NA
Filing Date	:NA

(71)**Name of Applicant :**
1)QUALCOMM INCORPORATED
Address of Applicant :Attn: International IP Administration 5775 Morehouse Drive San Diego, California 92121-1714 U.S.A.
(72)**Name of Inventor :**
1)RAGHAVAN, Vasanthan
2)ADIBELLI, Sinan
3)TASSOUDJI, Mohammad Ali
4)LI, Junyi

(57) Abstract :
A dual-polarized multiple-input-multiple-output (MIMO) mobile device is provided that includes a first array of antennas and a second array of antennas. Based upon a blockage of at least one of the array of antennas being less than a blockage threshold, the mobile device operates in a default configuration in which a default polarization selection from the second array is used in combination with a fixed polarization selection from the first array to form a first MIMO layer signal and a second MIMO layer signal. Should the blockage exceed the blockage threshold and an optional performance threshold be satisfied, the mobile device may operate in a dynamic configuration in which a dynamic polarization selection from the second array is reversed as compared to the default polarization selection.

No. of Pages : 32 No. of Claims : 30

(12) PATENT APPLICATION PUBLICATION
(21) Application No.202547095874 A
(19) INDIA
(22) Date of filing of Application :06/10/2025
(43) Publication Date : 07/11/2025

(54) Title of the invention : EXTENDED ACTIVE PERIOD OF CELLULAR DISCONTINUOUS TRANSMISSION AND DISCONTINUOUS RECEPTION

(51) International classification	:H04W 76/28, H04W 72/04, H04W 52/02
(31) Priority Document No	:NA
(32) Priority Date	:NA
(33) Name of priority country	:NA
(86) International Application No	:PCT/CN2023/093751
Filing Date	:12/05/2023
(87) International Publication No	:WO 2024/234115
(61) Patent of Addition to Application Number	:NA
Filing Date	:NA
(62) Divisional to Application Number	:NA
Filing Date	:NA

(71)**Name of Applicant :**
1)QUALCOMM INCORPORATED
Address of Applicant :5775 Morehouse Drive, San Diego CA 92121-1714 U.S.A.
(72)**Name of Inventor :**
1)LY, Hung Dinh
2)XIAO, Kexin

(57) Abstract :
Methods, systems, and devices for wireless communications are described. A user equipment (UE) may receive a first indication that a network entity is operating in a discontinuous operation mode, which may be a discontinuous transmission (DTX) mode, a discontinuous reception (DRX) mode, or both, which includes both active and inactive periods. The UE may then receive a second indication that a set of symbols or slots is allocated for synchronization signal block (SSB) reception or random access transmission, where the set of symbols or slots at least partially overlaps with the inactive period. The UE may then extend the active period to overlap the set of symbols or slots based on at least one of the set of symbols or slots being within a threshold quantity of symbols or slots from the active period, and may communicate via SSB reception or random access transmission during the extended active period.

No. of Pages : 96 No. of Claims : 57

(12) PATENT APPLICATION PUBLICATION
(21) Application No.202547095875 A
(19) INDIA
(22) Date of filing of Application :06/10/2025
(43) Publication Date : 07/11/2025

(54) Title of the invention : SELF-ALIGNED CONTACT STRUCTURES AND METHODS FOR MAKING THE SAME

(51) International classification	:H01L 21/768, H01L 29/78
(31) Priority Document No	:18/316862
(32) Priority Date	:12/05/2023
(33) Name of priority country	:U.S.A.
(86) International Application No	:PCT/US2024/024594
Filing Date	:15/04/2024
(87) International Publication No	:WO 2024/238061
(61) Patent of Addition to Application Number	:NA
Filing Date	:NA
(62) Divisional to Application Number	:NA
Filing Date	:NA

(71)**Name of Applicant :**
1)QUALCOMM INCORPORATED
Address of Applicant :ATTN: International IP Administration 5775 Morehouse Drive San Diego, California 92121-1714 U.S.A.
(72)**Name of Inventor :**
1)LI, Xia
2)BAO, Junjing
3)ZHU, John Jianhong

(57) Abstract :
A self-aligned contact (SAC) and method for making the same is disclosed. In an aspect a field effect transistor (FET) structure comprises a channel connecting a first source or drain (S/D) region to a second S/D region, a gate structure, comprising a multi- layer metal gate between gate spacers, disposed above a gate region that at least partially surrounds the channel, a self-alignment structure, also referred to as a "hat", disposed above the gate structure and covering at least the multi-layer metal gate and the gate spacers, and a first S/D contact that is self-aligned to the hat and connected to the first S/D region. During fabrication, a self-assembly monolayer (SAM) is used to precisely align the hat over the multi-layer metal gate. The S/D contacts are then self-aligned to the hat, even if the etch mask has an overlay error. The hat also shields the gate structure during an etch.

No. of Pages : 18 No. of Claims : 25

(12) PATENT APPLICATION PUBLICATION
(21) Application No.202547095884 A
(19) INDIA
(22) Date of filing of Application :06/10/2025
(43) Publication Date : 07/11/2025

(54) Title of the invention : MULTI-HOP CHANNEL SOUNDING FOR RELAY OPERATION

(51) International classification :H04W 84/12
(31) Priority Document No :18/319299
(32) Priority Date :17/05/2023
(33) Name of priority country :U.S.A.
(86) International Application No :PCT/US2024/023111
Filing Date :04/04/2024
(87) International Publication No :WO 2024/238037
(61) Patent of Addition to Application Number :NA
Filing Date :NA
(62) Divisional to Application Number :NA
Filing Date :NA

(71)**Name of Applicant :**
1)QUALCOMM INCORPORATED
Address of Applicant :Attn: International IP Administration 5775 Morehouse Drive San Diego, California 92121-1714 U.S.A.
(72)**Name of Inventor :**
1)CHERIAN, George
2)HO, Sai Yiu Duncan
3)ASTERJADHI, Alfred
4)PATIL, Abhishek Pramod
5)AJAMI, Abdel Karim
6)NAIK, Gaurang
7)SUN, Yanjun

(57) Abstract :
This disclosure provides methods, components, devices and systems for signaling mechanisms for multi-hop channel sounding for relay operation. Some aspects more specifically relate to frame addressing and transmission opportunity (TXOP) or service period (SP) sharing to facilitate a multi-hop channel sounding within a single TXOP or SP. An originating device may transmit a first frame indicating identifying information corresponding to multiple other wireless communication devices to initiate a multi-hop channel sounding involving the multiple other wireless communication devices. For example, the originating device may include, in the first frame, identifying information corresponding to a satellite access point (AP) and identifying information corresponding to an end device with which the originating device may communicate via the satellite AP. In accordance with the multi-hop channel sounding, the originating device may receive, collectively via one or more frames, channel information associated with each hop between the originating device and the end device.

No. of Pages : 174 No. of Claims : 30

(12) PATENT APPLICATION PUBLICATION
(21) Application No.202547095885 A
(19) INDIA
(22) Date of filing of Application :06/10/2025
(43) Publication Date : 07/11/2025

(54) Title of the invention : SOUNDING TECHNIQUES FOR ULTRA-HIGH RELIABILITY COMMUNICATIONS

(51) International classification	:H04L 5/00, H04B 7/06, H04W 8/22, H04W 24/10
(31) Priority Document No	:18/331738
(32) Priority Date	:08/06/2023
(33) Name of priority country	:U.S.A.
(86) International Application No	:PCT/US2024/029645
Filing Date	:16/05/2024
(87) International Publication No	:WO 2024/253819
(61) Patent of Addition to Application Number	:NA
Filing Date	:NA
(62) Divisional to Application Number	:NA
Filing Date	:NA

(71)**Name of Applicant :**
1)QUALCOMM INCORPORATED
Address of Applicant :Attn: International IP Administration 5775 Morehouse Drive San Diego, California 92121-1714 U.S.A.
(72)**Name of Inventor :**
1)ASTERJADHI, Alfred
2)VERMANI, Sameer
3)CHEN, Jialing Li
4)CHERIAN, George
5)TIAN, Bin

(57) Abstract :
This disclosure provides methods, components, devices, and systems that support sounding techniques for ultra-high reliability (UHR) communications. In some implementations, a first communication device may receive a null data packet announcement (NDPA) frame associated with a UHR NDPA variant type. The NDPA frame may include sounding information for communication devices that support UHR communications. The first communication device may receive a null data packet (NDP) in accordance with the sounding information, and may perform UHR communications based on measurements of the NDP. In some other implementations, the first communication device may receive a trigger frame that indicates the NDPA, a sounding mode for transmission of the NDP, and parameters for transmission of a compressed beamforming frame (CBF) associated with the NDP. The first communication device may transmit or receive the NDP in accordance with the sounding mode, and may receive or transmit the CBF using the parameters.

No. of Pages : 72 No. of Claims : 30

(12) PATENT APPLICATION PUBLICATION
(21) Application No.202547095900 A
(19) INDIA
(22) Date of filing of Application :06/10/2025
(43) Publication Date : 07/11/2025

(54) Title of the invention : ETHANOL DETECTION WITH HEATED FUEL INJECTOR IN FLEXIBLE FUEL VEHICLES

(51) International classification	:F02D 19/08, F02D 19/06, F02M 31/125, F02M 53/06
(31) Priority Document No	:18/119395
(32) Priority Date	:09/03/2023
(33) Name of priority country	:U.S.A.
(86) International Application No	:PCT/US2024/017659
Filing Date	:28/02/2024
(87) International Publication No	:WO 2024/186537
(61) Patent of Addition to Application Number	:NA
Filing Date	:NA
(62) Divisional to Application Number	:NA
Filing Date	:NA

(71)**Name of Applicant :**
1)PHINIA JERSEY HOLDINGS LLC
Address of Applicant :1209 Orange Street Wilmington, Delaware 19801 U.S.A.
(72)**Name of Inventor :**
1)KRENUS, Roberto Gothardo

(57) Abstract :
A method (100) of detecting a percentage of ethanol in fuel used by an engine (26) is provided. The method includes obtaining a heater temperature at a first time t1 at which a slope of the heater temperature as a function of time reaches a predetermined threshold value indicative of fuel boiling; obtaining the heater temperature at a subsequent time t2 at which the slope of the heater temperature approaches a value of the slope prior to the time t1 and which is greater than the predetermined threshold value; and determining the percentage of ethanol in the fuel as a function of the first time t1 and a calculated temperature difference ?T between the heater temperature at time t2 and the heater temperature at the first time t1. A fuel delivery system (20) that detects a percentage of ethanol in fuel by the method, and a flexible fuel vehicle including the fuel delivery system, are also provided.

No. of Pages : 14 No. of Claims : 16

(12) PATENT APPLICATION PUBLICATION
(21) Application No.202547095901 A
(19) INDIA
(22) Date of filing of Application :06/10/2025
(43) Publication Date : 07/11/2025

(54) Title of the invention : X-RAY DIFFRACTION APPARATUS AND METHOD FOR ANALYSING PACKAGED SAMPLES

(51) International classification :G01N 23/20008
(31) Priority Document No :23161051.0
(32) Priority Date :09/03/2023
(33) Name of priority country :EPO
(86) International Application No :PCT/EP2024/056238
Filing Date :08/03/2024
(87) International Publication No :WO 2024/184529
(61) Patent of Addition to Application Number :NA
Filing Date :NA
(62) Divisional to Application Number :NA
Filing Date :NA

(71)**Name of Applicant :**
1)MALVERN PANALYTICAL B.V.
Address of Applicant :Lelyweg 1, 7602 EA Almelo Netherlands
(72)**Name of Inventor :**
1)KOGAN, Vladimir
2)BECKERS, Detlef

(57) Abstract :
The present invention relates to a method and an X-ray diffraction apparatus for angular dispersive X-ray diffraction analysis of an analyte (sample) confined in a packaging (a "packaged sample"). The method comprises arranging a first primary X-ray optic between an X-ray source and the packaged sample to focus X-rays from the X-ray source into a focused X-ray beam of convergent or parallel X-rays and to direct the focused X-ray beam towards the packaged sample and arranging a first secondary X-ray optic between the packaged sample and an X-ray detector. The packaged sample is irradiated, by the X-ray source, with the focused X-ray beam of converging or parallel beam of X-rays, the X-rays having an energy greater than about 9 keV, while the analyte is confined in the packaging. The first secondary X-ray optic is configured such that a first portion of diffracted X-rays pass therethrough to be detected by the X-ray detector and a second portion of diffracted X-rays are prevented from being detected by the X-ray detector, wherein the first portion of diffracted X-rays come from a region within the packaging.

No. of Pages : 19 No. of Claims : 15

(12) PATENT APPLICATION PUBLICATION
(21) Application No.202547095902 A
(19) INDIA
(22) Date of filing of Application :06/10/2025
(43) Publication Date : 07/11/2025

(54) Title of the invention : ELECTROLYTE CONCENTRATION MEASURING METHOD

(51) International classification	:G01N 27/28, G01N 27/333, G01N 27/416
(31) Priority Document No	:2023-040808
(32) Priority Date	:15/03/2023
(33) Name of priority country	:Japan
(86) International Application No	:PCT/JP2024/007711
Filing Date	:01/03/2024
(87) International Publication No	:WO 2024/190453
(61) Patent of Addition to Application Number	:NA
Filing Date	:NA
(62) Divisional to Application Number	:NA
Filing Date	:NA

(71)**Name of Applicant :**
1)CANON KABUSHIKI KAISHA
Address of Applicant :30-2, Shimomaruko 3-chome, Ohta-ku, Tokyo 1468501 Japan
(72)**Name of Inventor :**
1)YAMAMOTO Takeshi
2)MIYAZAKI Keiji
3)MIURA Jun
4)ENOKIDO Fuka
5)MAEDA Harunobu
6)TANAKA Masanori
7)FUKATSU Makoto

(57) Abstract :
The present invention relates to an electrolyte concentration measuring method that has a simple structure, is capable of performing stable measurement without the need for time and effort to perform the measurement, and is capable of performing the measurement using a small amount of a specimen. The present invention relates to an electrolyte concentration measuring method including: a first step for dispensing a standard solution having a known concentration into a flow passage region, and obtaining first potential difference information based on a potential difference between a reference electrode and a working electrode after the standard solution has reached the reference electrode and the working electrode; a second step for dispensing a specimen onto the working electrode or in the vicinity of the working electrode, and obtaining second potential difference information based on the potential difference between the reference electrode and the working electrode; and a step for utilizing the first potential difference information and the second potential difference information to obtain data relating to the electrolyte concentration of the specimen.

No. of Pages : 30 No. of Claims : 4

(12) PATENT APPLICATION PUBLICATION
(21) Application No.202547095903 A
(19) INDIA
(22) Date of filing of Application :06/10/2025
(43) Publication Date : 07/11/2025

(54) Title of the invention : CSI(TL) SCINTILLATOR CRYSTAL INCLUDING CO-DOPANTS ANTIOMY AND BISMUTH TO REDUCE AFTERGLOW, AND A RADIATION DETECTION APPARATUS INCLUDING THE SCINTILLATION CRYSTAL

(51) International classification	:G01T 1/202, C09K 11/75
(31) Priority Document No	:NA
(32) Priority Date	:NA
(33) Name of priority country	:NA
(86) International Application No	:PCT/US2023/063960
Filing Date	:08/03/2023
(87) International Publication No	:WO 2024/186349
(61) Patent of Addition to Application Number	:NA
Filing Date	:NA
(62) Divisional to Application Number	:NA
Filing Date	:NA

(71)**Name of Applicant :**
1)LUXIUM SOLUTIONS, LLC
Address of Applicant :17900 Great Lakes Parkway Hiram, Ohio 44234 U.S.A.
(72)**Name of Inventor :**
1)MENG, Fang
2)MENGE, Peter R.

(57) Abstract :
A scintillation crystal can include a cesium halide that is co-doped with thallium and another element. In an embodiment, the scintillation crystal can include CsI:Tl, Me, where Me represents co-doped Sb and Bi. In a particular embodiment, the scintillation crystal may have a cesium iodide host material, a first dopant including a thallium, a second dopant including an antimony, and a third dopant including a bismuth.

No. of Pages : 14 No. of Claims : 10

(12) PATENT APPLICATION PUBLICATION
(21) Application No.202547095909 A
(19) INDIA
(22) Date of filing of Application :06/10/2025
(43) Publication Date : 07/11/2025

(54) Title of the invention : MULTI-CHAMBERED CHEMICAL SOLID PRECURSOR AMPOULE

(51) International classification	:C23C 16/448, C23C 16/455, H01L 21/67
(31) Priority Document No	:63/489290
(32) Priority Date	:09/03/2023
(33) Name of priority country	:U.S.A.
(86) International Application No	:PCT/US2024/018320
Filing Date	:04/03/2024
(87) International Publication No	:WO 2024/186726
(61) Patent of Addition to Application Number	:NA
Filing Date	:NA
(62) Divisional to Application Number	:NA
Filing Date	:NA

(71)**Name of Applicant :**
1)VERSUM MATERIALS US, LLC
Address of Applicant :8555 South River Parkway Tempe, Arizona 85284 U.S.A.
(72)**Name of Inventor :**
1)BIRTCHER, Charles M.
2)ESCHBACH, Robert

(57) Abstract :
A multi-chamber ampoule having a multi-chamber container and a lid is disclosed. The lid includes conduits for fluidly connecting multiple chambers of the container. The sublimation rate of each chamber is defined by a surface area of each chamber, a temperature of each chamber, and a headspace pressure of each chamber, and the sublimation rate of each chamber is substantially equal.

No. of Pages : 28 No. of Claims : 53

(12) PATENT APPLICATION PUBLICATION
(21) Application No.202547095910 A
(19) INDIA
(22) Date of filing of Application :06/10/2025
(43) Publication Date : 07/11/2025

(54) Title of the invention : A PROCESS AND PLANT FOR THE SYNTHESIS OF UREA AND MELAMINE

(51) International classification	:C07C 273/12, C07D 251/60
(31) Priority Document No	:23161325.8
(32) Priority Date	:10/03/2023
(33) Name of priority country	:EPO
(86) International Application No	:PCT/EP2024/056248
Filing Date	:08/03/2024
(87) International Publication No	:WO 2024/188890
(61) Patent of Addition to Application Number	:NA
Filing Date	:NA
(62) Divisional to Application Number	:NA
Filing Date	:NA

(71)**Name of Applicant :**
1)CASALE SA
Address of Applicant :Via Pocobelli 6 6900 Lugano Switzerland
(72)**Name of Inventor :**
1)MARRONE, Leonardo
2)GAMBA, Simone
3)BENEDETTI, Alberto

(57) Abstract :
An integrated process for the synthesis of urea and melamine, wherein urea synthesized in a urea plant is used to produce melamine in a melamine plant connected to the urea plant, according to a high-pressure non-catalytic melamine synthesis process, wherein melamine is synthesized at a pressure higher than urea synthesis pressure and offgas liberated during the synthesis of melamine are returned, as a gas, to the high-pressure synthesis section of the urea plant.

No. of Pages : 16 No. of Claims : 16

(12) PATENT APPLICATION PUBLICATION
(21) Application No.202547095958 A
(19) INDIA
(22) Date of filing of Application :06/10/2025
(43) Publication Date : 07/11/2025

(54) Title of the invention : COMPOSITE MATERIAL, COMPOSITE MATERIAL PRODUCTION METHOD, TERMINAL, AND TERMINAL PRODUCTION METHOD

(51) International classification	:C25D 7/00, C25D 3/46, C25D 5/16, C25D 15/02, H01R 13/03
(31) Priority Document No	:2023-039015
(32) Priority Date	:13/03/2023
(33) Name of priority country	:Japan
(86) International Application No	:PCT/JP2024/009270
Filing Date	:11/03/2024
(87) International Publication No	:WO 2024/190727
(61) Patent of Addition to Application Number	:NA
Filing Date	:NA
(62) Divisional to Application Number	:NA
Filing Date	:NA

(71)**Name of Applicant :**
1)DOWA METALTECH CO., LTD.
Address of Applicant :14-1, Sotokanda 4-chome, Chiyoda-ku, Tokyo 1010021 Japan
(72)**Name of Inventor :**
1)KIWAKI Kodai
2)SUGAWARA Akira
3)TOMIYA Takao
4)TAKAHASHI Hirotaka

(57) Abstract :
Provided is a composite material in which a composite film that is composed of a silver layer containing metal sulfide particles is formed on a base material, wherein the value X obtained by dividing the arithmetic average roughness Ra of the composite film by the thickness (μm) of the composite film is 0.14 or less.

No. of Pages : 39 No. of Claims : 18

(12) PATENT APPLICATION PUBLICATION
(21) Application No.202547095959 A
(19) INDIA
(22) Date of filing of Application :06/10/2025
(43) Publication Date : 07/11/2025

(54) Title of the invention : BEVERAGE SERVER AND DISPENSING NOZZLE

(51) International classification :B67D 1/14
(31) Priority Document No :2023-056272
(32) Priority Date :30/03/2023
(33) Name of priority country :Japan
(86) International Application No :PCT/JP2024/002710
Filing Date :29/01/2024
(87) International Publication No :WO 2024/202494
(61) Patent of Addition to Application Number :NA
Filing Date :NA
(62) Divisional to Application Number :NA
Filing Date :NA

(71)**Name of Applicant :**
1)ASAHI GROUP HOLDINGS, LTD.
Address of Applicant :23-1, Azumabashi 1-chome, Sumida-ku, Tokyo 1308602 Japan
(72)**Name of Inventor :**
1)MITSUHATA, Shinsuke
2)HAMAURA, Toshikazu
3)TAKAHASHI, Hiroyuki

(57) Abstract :
In order to dispense a carbonated beverage into a beverage container, the present invention comprises: a supply source for supplying a carbonated beverage; and a dispensing nozzle for dispensing the carbonated beverage supplied from the supply source into a beverage container. The dispensing nozzle includes: a cylindrical member; and a guide having a guide surface of which a portion is disposed inside the cylindrical member and another portion protrudes downward from the cylindrical member. The carbonated beverage falls inside the cylindrical member while being guided by the guide surface. The guide surface has an upper end and a lower end and is configured to decrease in slope toward the lower end from a position between the upper end and the lower end.

No. of Pages : 15 No. of Claims : 14

(12) PATENT APPLICATION PUBLICATION
(21) Application No.202547095960 A
(19) INDIA
(22) Date of filing of Application :06/10/2025
(43) Publication Date : 07/11/2025

(54) Title of the invention : DOUBLY ROTATED QAS-TYPE RESONATORS WITH REDUCED SENSITIVITY TO ACCELERATION

(51) International classification	:H03H 9/19, H03H 3/04, H03H 9/02, H03H 9/05, H03H 9/13
(31) Priority Document No	:798048
(32) Priority Date	:10/03/2023
(33) Name of priority country	:New Zealand
(86) International Application No	:PCT/IB2024/052227
Filing Date	:07/03/2024
(87) International Publication No	:WO 2024/189482
(61) Patent of Addition to Application Number	:NA
Filing Date	:NA
(62) Divisional to Application Number	:NA
Filing Date	:NA

(71)**Name of Applicant :**
1)RAKON LIMITED
Address of Applicant :8 Sylvia Park Road Mount Wellington Auckland 1060 New Zealand
(72)**Name of Inventor :**
1)BUNEL, Cyril
2)GUFFLET, Nicolas
3)CANDELIER, Vincent

(57) Abstract :
A quartz crystal resonator comprises an orthogonally mounted doubly rotated QAS-type resonating element having a pair of bridges positioned at a defined angle in relation to the resonating element's ZI or XI axes. The resonator has reduced sensitivity to mechanical acceleration.

No. of Pages : 7 No. of Claims : 8

(12) PATENT APPLICATION PUBLICATION
(21) Application No.202547095961 A
(19) INDIA
(22) Date of filing of Application :06/10/2025
(43) Publication Date : 07/11/2025

(54) Title of the invention : MEASUREMENT DEVICE

(51) International classification	:G01B 5/20, G01B 5/28
(31) Priority Document No	:2023-039048
(32) Priority Date	:13/03/2023
(33) Name of priority country	:Japan
(86) International Application No	:PCT/JP2024/008970
Filing Date	:08/03/2024
(87) International Publication No	:WO 2024/190643
(61) Patent of Addition to Application Number	:NA
Filing Date	:NA
(62) Divisional to Application Number	:NA
Filing Date	:NA

(71)**Name of Applicant :**
1)TOKYO SEIMITSU CO., LTD.
Address of Applicant :2968-2, Ishikawa-machi, Hachioji-shi, Tokyo 1928515 Japan
(72)**Name of Inventor :**
1)MAEDA Kunihiro

(57) Abstract :
A measurement device (1) is provided with a stylus for measuring the surface of an object to be measured, and comprises: a detector (10) including a stylus section (14) attached so as to be swingable around a swing center according to the shape of the surface of the object to be measured; a thermometer (80) that measures the temperature at the time of measurement by the stylus section; a temperature correction parameter storage unit (108) that stores temperature correction parameters corresponding to the type of the stylus section, the temperature at the time of measurement that was measured by the thermometer, and the temperature at the time of calibration; and a temperature correction unit (102) that detects the type of the stylus section used in the measurement, acquires the temperature correction parameter corresponding to the type of the stylus section, the temperature at the time of measurement that was measured by the thermometer, and the temperature at the time of calibration from the temperature correction parameter storage unit and corrects the measurement result on the basis of the temperature correction parameter.

No. of Pages : 15 No. of Claims : 3

(12) PATENT APPLICATION PUBLICATION
(21) Application No.202547095962 A
(19) INDIA
(22) Date of filing of Application :06/10/2025
(43) Publication Date : 07/11/2025

(54) Title of the invention : VEHICLES CAPABLE OF OPERATING ON CANTILEVERED SUPPORTS, GUIDEWAY TRACKS, AND CONVENTIONAL ROADWAYS

(51) International classification	:B61B 13/00, B62D 1/26
(31) Priority Document No	:2303560.3
(32) Priority Date	:10/03/2023
(33) Name of priority country	:U.K.
(86) International Application No	:PCT/EP2024/056284
Filing Date	:08/03/2024
(87) International Publication No	:WO 2024/188904
(61) Patent of Addition to Application Number	:NA
Filing Date	:NA
(62) Divisional to Application Number	:NA
Filing Date	:NA

(71)**Name of Applicant :**
1)URBAN.MASS LTD
Address of Applicant :c/o Canny & Associates 30 Moorgate London EC2R 6PJ U.K.
(72)**Name of Inventor :**
1)EMANUEL, John
2)SANDHU, Harpreet

(57) Abstract :
A vehicle is configured to operate in a first mode in a cantilevered manner from a left side of the vehicle; in a second mode in a cantilevered manner from a right side of the vehicle; in a third mode in which the vehicle is supported from beneath on a guideway track in a non-cantilevered manner; and in a fourth mode in which the vehicle is supported from beneath on a roadway. The vehicle comprises: a left support wheel on the left side of the vehicle configured to engage with a left lower running surface beneath the left support wheel for supporting the vehicle from beneath in the first mode, the third mode and the fourth mode; and a right support wheel on the right side of the vehicle configured to engage with a right lower running surface beneath the right support wheel for supporting the vehicle from beneath in the second mode, the third mode and the fourth mode. The vehicle further comprises: a left upper cantilever wheel assembly on the left side of the vehicle configured to bear against a left upper guide surface located proximate the left side of the vehicle in the first mode; and a right upper cantilever wheel assembly on the right side of the vehicle configured to bear against a right upper guide surface located proximate the right side of the vehicle in the second mode. The vehicle further comprises: a left lower side wheel assembly on the left side of the vehicle configured to bear against a left lower guide surface located proximate the left side of the vehicle in the first mode and the third mode; and a right lower side wheel assembly on the right side of the vehicle configured to bear against a right lower guide surface located proximate the right side of the vehicle in the second mode and the third mode. The left support wheel and the right support wheel are configured to effect steering of the vehicle in the third mode and in the fourth mode.

No. of Pages : 16 No. of Claims : 18

(12) PATENT APPLICATION PUBLICATION
(21) Application No.202547095993 A
(19) INDIA
(22) Date of filing of Application :06/10/2025
(43) Publication Date : 07/11/2025

(54) Title of the invention : DIRECT N/P LOCAL INTERCONNECT

(51) International classification	:H01L 21/768, H01L 21/8238
(31) Priority Document No	:18/327786
(32) Priority Date	:01/06/2023
(33) Name of priority country	:U.S.A.
(86) International Application No	:PCT/US2024/024586
Filing Date	:15/04/2024
(87) International Publication No	:WO 2024/248962
(61) Patent of Addition to Application Number	:NA
Filing Date	:NA
(62) Divisional to Application Number	:NA
Filing Date	:NA

(71)**Name of Applicant :**
1)QUALCOMM INCORPORATED
Address of Applicant :ATTN: International IP Administration 5775 Morehouse Drive San Diego, California 92121-1714 U.S.A.
(72)**Name of Inventor :**
1)BAO, Junjing
2)YANG, Haining
3)LIN, Ming-Huei

(57) Abstract :
Disclosed are devices that include a direct N/P local interconnect with minimal recess on shallow trench isolation (STI) oxide. This reduces undesirable coupling capacitance with active gate, which in turn improves AC performance of the device. Full or even partial replacement of STI oxide with low-k dielectric can further reduce coupling capacitance.

No. of Pages : 18 No. of Claims : 21

(12) PATENT APPLICATION PUBLICATION
(21) Application No.202547095994 A
(19) INDIA
(22) Date of filing of Application :06/10/2025
(43) Publication Date : 07/11/2025

(54) Title of the invention : BOOT CLUSTER INDICATION IN A COMPUTER SYSTEM

(51) International classification	:G06F 1/24, G06F 1/3206, G06F 1/3234, G06F 1/3287, G06F 9/4401
(31) Priority Document No	:18/327654
(32) Priority Date	:01/06/2023
(33) Name of priority country	:U.S.A.
(86) International Application No	:PCT/US2024/023814
Filing Date	:10/04/2024
(87) International Publication No	:WO 2024/248950
(61) Patent of Addition to Application Number	:NA
Filing Date	:NA
(62) Divisional to Application Number	:NA
Filing Date	:NA

(71)**Name of Applicant :**
1)QUALCOMM INCORPORATED
Address of Applicant :Attn: International IP Administration 5775 Morehouse Drive San Diego, California 92121-1714 U.S.A.
(72)**Name of Inventor :**
1)CHUN, Christopher Kong Yee

(57) Abstract :
Aspects of the present disclosure are directed to techniques and apparatuses for implementing a power-on (PON) sequence in a computer system. A power management integrated circuit (PMIC) receives a boot circuit indicator (BCI) signal from a computer system. The BCI signal identifies a circuit of the computer system to be enabled in a power-on (PON) sequence. The PMIC provides power to the boot core or cluster of the SoC based on the BCI signal.

No. of Pages : 21 No. of Claims : 30

(12) PATENT APPLICATION PUBLICATION
(21) Application No.202547096005 A
(19) INDIA
(22) Date of filing of Application :06/10/2025
(43) Publication Date : 07/11/2025

(54) Title of the invention : METHOD PERFORMED BY A DRIVER-IN-THE-LOOP COMPONENT OF A VEHICLE

(51) International classification	:B60W 10/20, B60W 30/12, B60W 50/08, B60W 50/00
(31) Priority Document No	:18/327221
(32) Priority Date	:01/06/2023
(33) Name of priority country	:U.S.A.
(86) International Application No	:PCT/US2024/024034
Filing Date	:11/04/2024
(87) International Publication No	:WO 2024/248957
(61) Patent of Addition to Application Number	:NA
Filing Date	:NA
(62) Divisional to Application Number	:NA
Filing Date	:NA

(71)**Name of Applicant :**
1)QUALCOMM INCORPORATED
Address of Applicant :ATTN: International IP Administration 5775 Morehouse Drive San Diego, California 92121-1714 U.S.A.
(72)**Name of Inventor :**
1)NASSAR, Mazen Medhat Mohamed El-Sayed
2)VEEN, Jan
3)REBER, Sibylle Tanja
4)KAMAL, Ahmed Ehab Sadek Sayed
5)GAUDSZUN, Benjamin

(57) Abstract :
Disclosed are techniques for operating a driver-in-the-loop (DIL) component of a vehicle. In an aspect, the DIL component receives a first input signal generated based on a first interaction of a driver with a component of the vehicle operating in an autonomous driving mode, applies an attack-sustain-release (ASR) envelope to an amplitude of the first input signal to generate a first output signal representing at least a ramp-in of driver control over the component from no driver control to full driver control, and wherein the ramp-in of the driver control is limited by application of the ASR envelope to the amplitude of the first input signal, and transmits the first output signal to a controller module for the component of the vehicle to enable the controller module to reduce control over the component of the vehicle based on the ramp-in of the driver control represented by the first output signal.

No. of Pages : 49 No. of Claims : 30

(12) PATENT APPLICATION PUBLICATION
(21) Application No.202547096007 A
(19) INDIA
(22) Date of filing of Application :06/10/2025
(43) Publication Date : 07/11/2025

(54) Title of the invention : IMPROVEMENTS TO ACTIVE LOCALIZATION IN WIRELESS NETWORKS

(51) International classification	:H04W 4/02, H04W 12/104
(31) Priority Document No	:NA
(32) Priority Date	:NA
(33) Name of priority country	:NA
(86) International Application No	:PCT/IB2023/052169
Filing Date	:07/03/2023
(87) International Publication No	:WO 2024/184674
(61) Patent of Addition to Application Number	:NA
Filing Date	:NA
(62) Divisional to Application Number	:NA
Filing Date	:NA

(71)**Name of Applicant :**
1)NOKIA SOLUTIONS AND NETWORKS OY
Address of Applicant :Karakaari 7 02610 Espoo Finland
(72)**Name of Inventor :**
1)HENNINGER, Marcus Roland
2)MANDELLI, Silvio
3)CHIARELLO, Leonardo
4)WILD, Thorsten

(57) Abstract :
Systems, methods, apparatuses, and computer program products for detecting spoofed and/or untrustworthy active localization measures by sensing and leveraging sensing measurements to enhance overall positioning performance. One method may include a network entity determining an active localization estimate of a target device; defining an area of interest based on the active localization estimate; receiving from a sensing management function, a passive localization estimate based on sensing information associated with the area of interest; and modifying the active localization estimate based on the passive localization estimate derived from the sensing information.

No. of Pages : 23 No. of Claims : 15

(12) PATENT APPLICATION PUBLICATION
(21) Application No.202547096009 A
(19) INDIA
(22) Date of filing of Application :06/10/2025
(43) Publication Date : 07/11/2025

(54) Title of the invention : CAMERA CALIBRATION BASED ON INFORMATION FROM EXTERNAL SOURCES FOR VEHICLE APPLICATIONS

(51) International classification	:G06T 7/73, G06T 7/80, G06T 7/33, G06V 20/52, G06V 10/24
(31) Priority Document No	:20230100460
(32) Priority Date	:09/06/2023
(33) Name of priority country	:Greece
(86) International Application No	:PCT/US2024/022853
Filing Date	:03/04/2024
(87) International Publication No	:WO 2024/253738
(61) Patent of Addition to Application Number	:NA
Filing Date	:NA
(62) Divisional to Application Number	:NA
Filing Date	:NA

(71)**Name of Applicant :**
1)QUALCOMM INCORPORATED
Address of Applicant :ATTN: International IP Administration 5775 Morehouse Drive San Diego, CA 92121-1714 U.S.A.
(72)**Name of Inventor :**
1)BALASUBRAMANIAN, Anantharaman
2)GULATI, Kapil
3)STEFANATOS, Stelios

(57) Abstract :
This disclosure provides systems, methods, and devices for vehicle driving assistance systems that support image processing. In a first aspect, a method of image processing includes receiving, from a camera, first image data, from a first source, second image data and first pose information, and from a second source, third image data and second pose information. A field-of-view of the camera overlaps with a fieldof- view of the first source and with a field-of-view of the second source. Third pose information of the camera is determined based on the first image data, second image data, third image data, the first pose information, and the second pose information. Other aspects and features are also claimed and described.

No. of Pages : 44 No. of Claims : 30

(12) PATENT APPLICATION PUBLICATION
(21) Application No.202547096020 A
(19) INDIA
(22) Date of filing of Application :06/10/2025
(43) Publication Date : 07/11/2025

(54) Title of the invention : RECEIVER ARRAYS FOR PHOTOACOUSTIC DEVICES

(51) International classification	:A61B 5/00, A61B 5/021, A61B 5/0285
(31) Priority Document No	:18/323021
(32) Priority Date	:24/05/2023
(33) Name of priority country	:U.S.A.
(86) International Application No	:PCT/US2024/023914
Filing Date	:10/04/2024
(87) International Publication No	:WO 2024/242779
(61) Patent of Addition to Application Number	:NA
Filing Date	:NA
(62) Divisional to Application Number	:NA
Filing Date	:NA

(71)**Name of Applicant :**
1)QUALCOMM INCORPORATED
Address of Applicant :Attn: International IP Administration 5775 Morehouse Drive San Diego, California 92121-1714 U.S.A.
(72)**Name of Inventor :**
1)PEREZ SAAIBI, Camilo
2)PANCHAWAGH, Hrishikesh Vijaykumar
3)AGRAWAL, Sumit
4)DJORDJEV, Kostadin Dimitrov

(57) Abstract :
Some disclosed examples involve controlling, by a control system, a light source system to provide light to a target object on an outer surface of a platen and receiving, by the control system, ultrasonic receiver signals from each of a plurality of ultrasonic receiver elements in an array of ultrasonic receiver elements. The ultrasonic receiver signals may correspond to ultrasonic waves generated by the target object responsive to the light from the light source system. Some disclosed examples involve applying, by the control system, a receiver-side beamforming process to the ultrasonic receiver signals, to produce a beamformed ultrasonic receiver image and detecting, by the control system, a blood vessel within the targe object based, at least in part, on the beamformed ultrasonic receiver image.

No. of Pages : 51 No. of Claims : 32

(12) PATENT APPLICATION PUBLICATION
(21) Application No.202547096032 A
(19) INDIA
(22) Date of filing of Application :06/10/2025
(43) Publication Date : 07/11/2025

(54) Title of the invention : MONITORING SYSTEM INFORMATION CHANGE INDICATION

(51) International classification	:H04W 48/16, H04L 5/00, H04W 52/02, H04W 68/00
(31) Priority Document No	:63/503878
(32) Priority Date	:23/05/2023
(33) Name of priority country	:U.S.A.
(86) International Application No	:PCT/US2024/023615
Filing Date	:08/04/2024
(87) International Publication No	:WO 2024/242774
(61) Patent of Addition to Application Number	:NA
Filing Date	:NA
(62) Divisional to Application Number	:NA
Filing Date	:NA

(71)**Name of Applicant :**
1)QUALCOMM INCORPORATED
Address of Applicant :Attn: International IP Administration 5775 Morehouse Drive San Diego, California 92121-1714 U.S.A.
(72)**Name of Inventor :**
1)LEI, Jing

(57) Abstract :
Apparatus, methods, and computer program products for monitoring system information change are provided. An example method may include receiving, from a network entity, a configuration for an initial downlink (DL) bandwidth part (BWP) associated with a small data transmission (SDT) procedure, where a synchronization signal block (SSB) is configured to be transmitted in the initial DL BWP associated with the SDT procedure. The example method may further include receiving, from the network entity, a paging early indication (PEI) that indicates no paging physical downlink control channel (PDCCH) is scheduled for a first paging occasion (PO) or a first PO group. The example method may further include skipping monitoring for a system information change indication in the first PO or the first PO group in response to reception of the PEI.

No. of Pages : 48 No. of Claims : 20

(12) PATENT APPLICATION PUBLICATION
(21) Application No.202547096033 A
(19) INDIA
(22) Date of filing of Application :06/10/2025
(43) Publication Date : 07/11/2025

(54) Title of the invention : REFERENCE SIGNALS ASSOCIATED WITH ARTIFICIAL INTELLIGENCE OR MACHINE LEARNING PERFORMANCE MONITORING

(51) International classification :H04B 7/0413
(31) Priority Document No :NA
(32) Priority Date :NA
(33) Name of priority country :NA
(86) International Application No :PCT/CN2023/095677
Filing Date :23/05/2023
(87) International Publication No :WO 2024/239220
(61) Patent of Addition to Application Number :NA
Filing Date :NA
(62) Divisional to Application Number :NA
Filing Date :NA

(71)**Name of Applicant :**
1)QUALCOMM INCORPORATED
Address of Applicant :5775 Morehouse Drive, San Diego California 92121-1714 U.S.A.
(72)**Name of Inventor :**
1)PEZESHKI, Hamed
2)LI, Qiaoyu
3)TAHERZADEH BOROUJENI, Mahmoud

(57) Abstract :
Various aspects of the present disclosure generally relate to wireless communication. In some aspects, a user equipment (UE) may receive first reference signals (RSs), transmitted using a first set of parameters, associated with artificial intelligence or machine learning (AI/ML) performance monitoring. The UE may transmit, based at least in part on detection of a trigger event, an indication to use a second set of parameters for transmission of second RSs associated with AI/ML performance monitoring. The UE may receive, based at least in part on the indication, the second RSs associated with AI/ML performance monitoring. Numerous other aspects are described.

No. of Pages : 53 No. of Claims : 30

(12) PATENT APPLICATION PUBLICATION
(21) Application No.202547096036 A
(19) INDIA
(22) Date of filing of Application :06/10/2025
(43) Publication Date : 07/11/2025

(54) Title of the invention : INTEGRATING LIVE TELEVISION CONTENT FROM MULTIPLE SOURCES IN AN ELECTRONIC PROGRAM GUIDE OF A MEDIA PLATFORM

(51) International classification	:H04N 21/258, H04N 21/262, H04N 21/2665, H04N 21/2668, H04N 21/422	
(31) Priority Document No	:NA	
(32) Priority Date	:NA	
(33) Name of priority country	:NA	
(86) International Application No	:PCT/US2023/017521	
Filing Date	:05/04/2023	
(87) International Publication No	:WO 2024/210893	
(61) Patent of Addition to Application Number	:NA	
Filing Date	:NA	
(62) Divisional to Application Number	:NA	
Filing Date	:NA	

(71)**Name of Applicant :**
1)GOOGLE LLC
Address of Applicant :1600 Amphitheatre Parkway Mountain View, CA 94043 U.S.A.
(72)**Name of Inventor :**
1)JING, Yuan
2)LI, Jingjiang
3)SANDERS, Branden, Harrison
4)LIN, Weijie
5)XIE, Lijuan
6)HUANG, Senhua
7)FENG, Xiaoxue
8)STAUBACH, Nicholas
9)BAGHDASSARIAN, Leo

(57) Abstract :
According to an aspect, a method includes receiving a request for electronic programming guide data from a television device, retrieving a list of television channels associated with a plurality of providers, constructing, using configuration data, a plurality of navigation groups, each of the plurality of navigation groups being a separate group of television channels, retrieving program data that identifies programs broadcasted by the list of television channels, and transmitting electronic programming guide data to the television device. The electronic programming guide data is configured to cause the television device to display a selectable user interface (UI) element corresponding to each of the plurality of navigation groups in a portion of an electronic programming guide.

No. of Pages : 61 No. of Claims : 13

(12) PATENT APPLICATION PUBLICATION
(21) Application No.202547096037 A
(19) INDIA
(22) Date of filing of Application :06/10/2025
(43) Publication Date : 07/11/2025

(54) Title of the invention : DYNAMIC CROSS-LINK INTERFERENCE MEASUREMENTS IN MULTIPLE MEASUREMENT OCCASIONS

(51) International classification	:H04W 72/04
(31) Priority Document No	:NA
(32) Priority Date	:NA
(33) Name of priority country	:NA
(86) International Application No	:PCT/CN2023/094703
Filing Date	:17/05/2023
(87) International Publication No	:WO 2024/234327
(61) Patent of Addition to Application Number	:NA
Filing Date	:NA
(62) Divisional to Application Number	:NA
Filing Date	:NA

(71)**Name of Applicant :**
1)QUALCOMM INCORPORATED
Address of Applicant :5775 Morehouse Drive San Diego, California 92121-1714 U.S.A.
(72)**Name of Inventor :**
1)REN, Yuwei
2)ZHOU, Yan
3)XU, Huilin
4)ZHANG, Qian

(57) Abstract :
Wireless communications systems, apparatuses, and methods are provided. A method of wireless communication performed by a first user equipment (UE) includes receiving, from a network unit, a cross link interference (CLI) measurement resource configuration, wherein the CLI measurement resource configuration indicates a plurality of CLI measurement occasions, measuring CLI associated with a second UE in the plurality of CLI measurement occasions, and transmitting, to the network unit, one or more CLI measurement reports associated with the measured CLI.

No. of Pages : 47 No. of Claims : 30

(12) PATENT APPLICATION PUBLICATION
(21) Application No.202547096038 A
(19) INDIA
(22) Date of filing of Application :06/10/2025
(43) Publication Date : 07/11/2025

(54) Title of the invention : 8TX USER EQUIPMENT PRECODER CODEBOOK FALLBACK

(51) International classification :H04B 7/0456
(31) Priority Document No :PCT/CN2023/093765
(32) Priority Date :12/05/2023
(33) Name of priority country :China
(86) International Application No :PCT/CN2024/084298
Filing Date :28/03/2024
(87) International Publication No :WO 2024/234841
(61) Patent of Addition to Application Number :NA
Filing Date :NA
(62) Divisional to Application Number :NA
Filing Date :NA

(71)**Name of Applicant :**
1)QUALCOMM INCORPORATED
Address of Applicant :Attn: International IP Administration 5775 Morehouse Drive San Diego, California 92121-1714 U.S.A.
(72)**Name of Inventor :**
1)HUANG, Yi
2)XIAO, Kexin

(57) Abstract :
Various aspects of the present disclosure generally relate to wireless communication. In some aspects, a user equipment (UE) may transmit capability information including: first capability information that indicates a minimum supported value for a coherence parameter, where each value for the coherence parameter corresponds to a respective precoder codebook (CB) set, and second capability information that indicates one or more other values, greater than the minimum supported value, for the coherence parameter that correspond to one or more supported fallback precoder CB sets. The UE may receive configuration information indicating a combination from one or more supported combinations of one or more precoder CB sets based at least in part on the first capability information and the second capability information. Numerous other aspects are described.

No. of Pages : 74 No. of Claims : 30

(12) PATENT APPLICATION PUBLICATION
(21) Application No.202547096039 A
(19) INDIA
(22) Date of filing of Application :06/10/2025
(43) Publication Date : 07/11/2025

(54) Title of the invention : UNIFIED TRANSMISSION CONFIGURATION INDICATOR (TCI) STATE INDICATION FOR SINGLE OR MULTIPLE DOWNLINK CONTROL INFORMATION (DCI) BASED MULTIPLE TRANSMISSION RECEPTION POINT (TRP) OPERATION

(51) International classification	:H04W 8/24, H04W 72/04
(31) Priority Document No	:PCT/CN2023/093769
(32) Priority Date	:12/05/2023
(33) Name of priority country	:China
(86) International Application No	:PCT/CN2024/091068
Filing Date	:01/05/2024
(87) International Publication No	:WO 2024/235023
(61) Patent of Addition to Application Number	:NA
Filing Date	:NA
(62) Divisional to Application Number	:NA
Filing Date	:NA

(71)**Name of Applicant :**
1)QUALCOMM INCORPORATED
Address of Applicant :Attn: International IP Administration 5775 Morehouse Drive San Diego, California 92121-1714 U.S.A.
(72)**Name of Inventor :**
1)YUAN, Fang
2)ZHOU, Yan

(57) Abstract :
Methods, systems, and devices for wireless communications are described. In multiple downlink control information (multi-DCI) based multiple transmission reception point (multi-TRP) operations, a user equipment (UE) may receive respective DCIs from each of the multiple TRPs that schedule a shared channel communication to be performed with the corresponding TRP of the multiple TRPs. A UE may be configured with or activated with unified transmission configuration indicator (TCI) states for one or more channels or signals. A UE may transmit capability information to the network that indicates capabilities of the UE associated with application of the unified TCI state framework to multi-DCI based multi-TRP operation. The network may transmit control signaling indicating parameters for the multi-DCI based multi-TRP operation based on the capability information. The UE may receive multiple DCIs from the multiple TRPs that schedule a multi-TRP operation (e.g., a shared channel communication between the UE and the multiple TRPs).

No. of Pages : 153 No. of Claims : 20

(12) PATENT APPLICATION PUBLICATION
(21) Application No.202547096040 A
(19) INDIA
(22) Date of filing of Application :06/10/2025
(43) Publication Date : 07/11/2025

(54) Title of the invention : MODULATION SCHEMES FOR CHIRP-BASED WAKEUP SIGNALS

(51) International classification	:H04W 52/02	(71)**Name of Applicant :**
(31) Priority Document No	:NA	**1)QUALCOMM INCORPORATED**
(32) Priority Date	:NA	Address of Applicant :5775 Morehouse Drive, San Diego California 92121-1714 U.S.A.
(33) Name of priority country	:NA	
(86) International Application No	:PCT/CN2023/093456	(72)**Name of Inventor :**
Filing Date	:11/05/2023	**1)WU, Zhikun**
(87) International Publication No	:WO 2024/229792	**2)YANG, Wei**
(61) Patent of Addition to Application Number	:NA	**3)GAAL, Peter**
Filing Date	:NA	**4)XU, Huilin**
(62) Divisional to Application Number	:NA	**5)KIM, Yuchul**
Filing Date	:NA	

(57) Abstract :
Methods, systems, and devices for wireless communication are described. A device may modulate a set of information bits using on-off keying (OOK), or frequency shift keying (FSK), or both. The device may generate a wakeup signal (WUS) waveform using a chirp signal and the modulated set of information bits. The device may transmit the WUS waveform via at least a portion of a WUS bandwidth and a portion of a WUS time duration. The WUS waveform may occupy at least the portion of the WUS bandwidth and at least the portion of the WUS time duration in accordance with a pattern that is based on the modulated set of information bits.

No. of Pages : 92 No. of Claims : 30

(12) PATENT APPLICATION PUBLICATION
(21) Application No.202547096070 A
(19) INDIA
(22) Date of filing of Application :06/10/2025
(43) Publication Date : 07/11/2025

(54) Title of the invention : SYSTEM AND METHOD FOR CUSTOMIZING A CLOUD CONSOLE FOR USE WITH CLOUD ENVIRONMENTS

(51) International classification	:G06F 9/50, G06F 8/38, G06Q 30/0601
(31) Priority Document No	:63/462868
(32) Priority Date	:28/04/2023
(33) Name of priority country	:U.S.A.
(86) International Application No	:PCT/US2024/026345
Filing Date	:25/04/2024
(87) International Publication No	:WO 2024/226854
(61) Patent of Addition to Application Number	:NA
Filing Date	:NA
(62) Divisional to Application Number	:NA
Filing Date	:NA

(71)**Name of Applicant :**
1)ORACLE INTERNATIONAL CORPORATION
Address of Applicant :500 Oracle Parkway, Mail Stop 5OP7 Redwood Shores, California 94065 U.S.A.
(72)**Name of Inventor :**
1)MOHAN, Abishek Murali
2)SHAKER, Alaa
3)KUMAR, Amit
4)REDDY, Naveen Kumar Narayana
5)LARRICART, Martin Gonzalez
6)NANDWANA, Anuj

(57) Abstract :
Systems and methods described herein provide for a customizable console, for use with providing cloud environments. Cloud computing offerings enable access within the context of a cloud environment by third-party operators acting as resellers of products or services owned or managed by a cloud provider. An operator provides access to their customers via consoles that are customizable by the operators to enable greater control over their cloud-based products and services.

No. of Pages : 45 No. of Claims : 23

(12) PATENT APPLICATION PUBLICATION
(21) Application No.202547096072 A
(19) INDIA
(22) Date of filing of Application :06/10/2025
(43) Publication Date : 07/11/2025

(54) Title of the invention : INDICATING USER INPUT TIMINGS ASSOCIATING WITH GAMING

(51) International classification	:H04W 56/00, A63F 13/44, G06F 1/00, H04W 76/00, H04W 92/00
(31) Priority Document No	:18/321690
(32) Priority Date	:22/05/2023
(33) Name of priority country	:U.S.A.
(86) International Application No	:PCT/US2024/028175
Filing Date	:07/05/2024
(87) International Publication No	:WO 2024/242868
(61) Patent of Addition to Application Number	:NA
Filing Date	:NA
(62) Divisional to Application Number	:NA
Filing Date	:NA

(71)**Name of Applicant :**
1)QUALCOMM INCORPORATED
Address of Applicant :ATTN: International IP Administration 5775 Morehouse Drive San Diego, California 92121-1714 U.S.A.
(72)**Name of Inventor :**
1)GAINEY, Kenneth Marvin
2)ELSHERIF, Ahmed Ragab
3)BANERJEA, Raja
4)HE, Rong

(57) Abstract :
Various aspects of the present disclosure generally relate to wireless communication. In some aspects, a wireless communication device may receive a first beacon signal associated with a wireless access point associated with a gaming console, the first beacon signal indicating a first reference time value. The wireless communication device may obtain, associated with a first input time, a first indication of a first user input to a user input device, wherein the wireless communication device is associated with the user input device. The wireless communication device may transmit a first communication comprising first user input data, associated with the first indication, and a first input timing value indicating the first input time relative to the first reference time value. Numerous other aspects are described.

No. of Pages : 35 No. of Claims : 30

(12) PATENT APPLICATION PUBLICATION
(21) Application No.202547096073 A
(19) INDIA
(22) Date of filing of Application :06/10/2025
(43) Publication Date : 07/11/2025

(54) Title of the invention : SIGNALING SUPPORT FOR MULTIPLE CODING SCHEMES TO A SINGLE USER DEVICE

(51) International classification :H04L 1/00
(31) Priority Document No :18/321624
(32) Priority Date :22/05/2023
(33) Name of priority country :U.S.A.
(86) International Application No :PCT/US2023/082416
Filing Date :05/12/2023
(87) International Publication No :WO 2024/242719
(61) Patent of Addition to Application Number :NA
Filing Date :NA
(62) Divisional to Application Number :NA
Filing Date :NA

(71)**Name of Applicant :**
1)QUALCOMM INCORPORATED
Address of Applicant :Attn: International IP Administration 5775 Morehouse Drive San Diego, California 92121-1714 U.S.A.
(72)**Name of Inventor :**
1)YANG, Lin
2)CHEN, Jialing Li
3)TIAN, Bin
4)AMALLADINNE, Vamsi Krishna
5)VERMANI, Sameer
6)JAIN, Akansh
7)CHANDRASEKARAN, Suresh
8)PALANIVELU, Arul Durai Murugan

(57) Abstract :
Methods, systems, and devices for wireless communications are described. A first device may transmit control signaling to a second device. The control signaling may indicate a set of different modulation and coding schemes (MCSs) to be applied to at least one of a set of spatial streams or a set of resource units (RUs), where the control signaling may indicate that a respective MCS to be applied to a respective spatial stream or to a respective RU. The first device may transmit, one or more first bits of a first service data unit to the second device via a first spatial stream of or via a first RU using a first MCS and transmit one or more second bits, of the first service data unit or of a second service data unit via a second spatial stream or via a second RU using a second MCS.

No. of Pages : 105 No. of Claims : 30

(12) PATENT APPLICATION PUBLICATION
(21) Application No.202547096074 A
(19) INDIA
(22) Date of filing of Application :06/10/2025
(43) Publication Date : 07/11/2025

(54) Title of the invention : PHASE DETECTION DATA ENCODING TECHNIQUES

(51) International classification	:H04N 23/67, H04N 23/80, H04N 25/704
(31) Priority Document No	:18/327682
(32) Priority Date	:01/06/2023
(33) Name of priority country	:U.S.A.
(86) International Application No	:PCT/US2024/022863
Filing Date	:03/04/2024
(87) International Publication No	:WO 2024/248938
(61) Patent of Addition to Application Number	:NA
Filing Date	:NA
(62) Divisional to Application Number	:NA
Filing Date	:NA

(71)**Name of Applicant :**
1)QUALCOMM INCORPORATED
Address of Applicant :ATTN: International IP Administration 5775 Morehouse Drive San Diego, California 92121-1714 U.S.A.
(72)**Name of Inventor :**
1)DEY, Abhijeet
2)GALOR GLUSKIN, Micha
3)ABRAHAM, Joby
4)GADIYA, Shrey Shailesh
5)NERLIGE ONKARAPPA, Raghavendra Prasad
6)PATIL, Shridhar Prakash

(57) Abstract :
This disclosure provides systems, methods, and devices for image signal processing that support compression of phase detection (PD) data. In a first aspect, a method of image processing includes receiving image data and first phase detection data corresponding to the image data; determining a first channel of the first phase detection data and a second channel of the first phase detection data; and coding the first phase detection data to determine second phase detection data by separately coding the first channel and the second channel. Other aspects and features are also claimed and described.

No. of Pages : 37 No. of Claims : 30

(12) PATENT APPLICATION PUBLICATION
(21) Application No.202547096149 A
(19) INDIA
(22) Date of filing of Application :06/10/2025
(43) Publication Date : 07/11/2025

(54) Title of the invention : REDUCING FLUID MIXER

(51) International classification	:B01F 23/213, B01F 25/313, B01F 25/314, F01N 3/24, F01N 3/28
(31) Priority Document No	:FR2302689
(32) Priority Date	:22/03/2023
(33) Name of priority country	:France
(86) International Application No	:PCT/US2024/020901
Filing Date	:21/03/2024
(87) International Publication No	:WO 2024/197141
(61) Patent of Addition to Application Number	:NA
Filing Date	:NA
(62) Divisional to Application Number	:NA
Filing Date	:NA

(71)**Name of Applicant :**
1)CUMMINS EMISSION SOLUTIONS INC.
Address of Applicant :500 Jackson Street Columbus, Indiana 47201 U.S.A.
(72)**Name of Inventor :**
1)GÉANT, Ludovic
2)KULKARNI, Vinayak
3)DEVARA, Deepakkumar

(57) Abstract :
A mixer includes a reducing fluid injector, a disc-shaped injector, an elastic mat, and a hollow mixing chamber. The reducing fluid injector is configured to spray a reducing fluid into an exhaust gas flow. The reducing fluid injector is arranged along an axis. The disc-shaped injector support extends around the axis. The elastic mat is disposed on the disc-shaped injector support. The hollow mixing chamber extends around the axis and disposed on the elastic mat and separated from the disc-shaped injector support by the elastic mat. The hollow mixing chamber is tapered.

No. of Pages : 8 No. of Claims : 19

(12) PATENT APPLICATION PUBLICATION
(19) INDIA
(22) Date of filing of Application :06/10/2025
(21) Application No.202547096152 A
(43) Publication Date : 07/11/2025

(54) Title of the invention : MEASUREMENT PERIOD STARTPOINT FOR POSITION ESTIMATION SESSION OF A USER EQUIPMENT

(51) International classification	:H04W 64/00, H04W 76/28
(31) Priority Document No	:20230100386
(32) Priority Date	:12/05/2023
(33) Name of priority country	:Greece
(86) International Application No	:PCT/US2024/026484
Filing Date	:26/04/2024
(87) International Publication No	:WO 2024/238114
(61) Patent of Addition to Application Number	:NA
Filing Date	:NA
(62) Divisional to Application Number	:NA
Filing Date	:NA

(71)**Name of Applicant :**
1)QUALCOMM INCORPORATED
Address of Applicant :Attn: International IP Administration 5775 Morehouse Drive San Diego, California 92121-1714 U.S.A.
(72)**Name of Inventor :**
1)CABRERA MERCADER, Carlos
2)MANOLAKOS, Alexandros
3)SHARMA, Prashant
4)RYU, Jae Ho
5)KADIRI, Prasada Veera Reddy

(57) Abstract :
In an aspect, a user equipment (UE) determines a startpoint of a measurement period associated with a downlink positioning reference signal (DL-PRS) configuration based on a discontinuous reception (DRX) configuration and one or more extended DRX (eDRX) configuration parameters. In a further aspect, a position estimation entity receives a measurement report based on positioning measurements performed by the UE in accordance with the startpoint of the measurement period.

No. of Pages : 101 No. of Claims : 30

(12) PATENT APPLICATION PUBLICATION
(21) Application No.202547096153 A
(19) INDIA
(22) Date of filing of Application :06/10/2025
(43) Publication Date : 07/11/2025

(54) Title of the invention : MANAGING A GROUP OF WI-FI-ENABLED WEARABLE OR HANDHELD WIRELESS DEVICES USING A SHARED ADDRESS

(51) International classification	:H04L 61/5038, H04L 61/5069, H04W 76/11, H04L 101/622
(31) Priority Document No	:63/504187
(32) Priority Date	:24/05/2023
(33) Name of priority country	:U.S.A.
(86) International Application No	:PCT/US2024/027000
Filing Date	:30/04/2024
(87) International Publication No	:WO 2024/242833
(61) Patent of Addition to Application Number	:NA
Filing Date	:NA
(62) Divisional to Application Number	:NA
Filing Date	:NA

(71)**Name of Applicant :**
1)QUALCOMM INCORPORATED
Address of Applicant :ATTN: International IP Administration 5775 Morehouse Drive San Diego, California 92121-1714 U.S.A.
(72)**Name of Inventor :**
1)KUPPA, Srikant
2)ELSHERIF, Ahmed Ragab
3)LINSKY, Joel
4)JONES, Vincent Knowles

(57) Abstract :
This disclosure provides methods, components, devices and systems for managing a group of Wi-Fi-enabled wearable or handheld wireless devices using a shared address. Some aspects more specifically relate to a negotiation of a shared address that corresponds to a group of Wi-Fi-enabled wearable or handheld devices and use of the shared address during a connection setup procedure for the group. In some implementations, by performing the connection setup procedure using the shared address, one wearable or handheld device may perform the connection setup procedure on behalf of the group. Wearable or handheld devices of the group also may exchange packets to indicate, with respect to the shared address, respective link identifiers (IDs) uniquely corresponding to each respective wearable or handheld device of the group, which the wearable or handheld devices of the group may use to differentiate traffic intended for different wearable or handheld devices of the group.

No. of Pages : 103 No. of Claims : 30

(12) PATENT APPLICATION PUBLICATION
(21) Application No.202547096197 A
(19) INDIA
(22) Date of filing of Application :06/10/2025
(43) Publication Date : 07/11/2025

(54) Title of the invention : METHODS AND SYSTEMS FOR PERFORMING ZOOM OPERATIONS ON COMPUTING DEVICE

(51) International classification	:G06F 3/04845
(31) Priority Document No	:NA
(32) Priority Date	:NA
(33) Name of priority country	:NA
(86) International Application No	:PCT/CN2023/097687
Filing Date	:01/06/2023
(87) International Publication No	:WO 2024/243945
(61) Patent of Addition to Application Number	:NA
Filing Date	:NA
(62) Divisional to Application Number	:NA
Filing Date	:NA

(71)**Name of Applicant :**
1)QUALCOMM INCORPORATED
Address of Applicant :ATTN: International IP Administration 5775 Morehouse Drive San Diego California 92121-1714 U.S.A.
(72)**Name of Inventor :**
1)ZHANG, Nan
2)LI, Zhiguo
3)YAO, Wenkai

(57) Abstract :
Systems and methods for performing a zoom operation on a display of a computing device, which include identifying a region of interest (ROI) of an image presented on the display based on a zoom user input, determining a scaling factor for a final zoomed presentation of the ROI based on an image rendering requirement and/or an inference speed of a frame generation convolutional neural network (CNN), using the CNN to generate the final zoomed presentation of the ROI to the determined scaling factor, down-scaling the final zoomed presentation to generate a sequence of intermediate size image frames each having dimensions smaller than dimensions of the final zoomed presentation of the ROI and greater than dimensions of the ROI, and rendering an animation of changes in a displayed size of the ROI using the sequence of intermediate image frames of the ROI.

No. of Pages : 34 No. of Claims : 28

(12) PATENT APPLICATION PUBLICATION
(21) Application No.202547096215 A
(19) INDIA
(22) Date of filing of Application :06/10/2025
(43) Publication Date : 07/11/2025

(54) Title of the invention : BUILDING ENVELOPE COVERING SYSTEMS AND COMPONENTS

(51) International classification	:E04D 1/08, E04D 1/20, E04D 1/00, E04D 1/30, F24S 25/61
(31) Priority Document No	:2303331.9
(32) Priority Date	:07/03/2023
(33) Name of priority country	:U.K.
(86) International Application No	:PCT/IB2024/052152
Filing Date	:06/03/2024
(87) International Publication No	:WO 2024/184821
(61) Patent of Addition to Application Number	:NA
Filing Date	:NA
(62) Divisional to Application Number	:NA
Filing Date	:NA

(71)**Name of Applicant :**
1)TAKAZURI LIMITED
Address of Applicant :18 Great Queen Street, Covent Garden London WC2B 5AH U.K.
(72)**Name of Inventor :**
1)HORNOR, Christopher
2)SCHLESINGER, Maria
3)KASSEM, Adel

(57) Abstract :
An aspect of the present invention provides a building tile made from a plastic material, having a top surface and a bottom surface and generally comprising a top section and a bottom section, and wherein the top section of the building tile is configured to interlock with the top section of adjacent building tiles in a horizontal row and the bottom section of another building tile positioned above it in a vertical row, and the bottom section of the building tile is configured to interlock with the bottom section of adjacent building tiles in a horizontal row.

No. of Pages : 24 No. of Claims : 24

(12) PATENT APPLICATION PUBLICATION
(19) INDIA
(22) Date of filing of Application :07/10/2025
(21) Application No.202547096386 A
(43) Publication Date : 07/11/2025

(54) Title of the invention : UTILIZING CURVED FOCAL PLANES FOR OPTICAL WIRELESS COMMUNICATION

(51) International classification	:H04B 10/112, H04B 10/114
(31) Priority Document No	:18/327779
(32) Priority Date	:01/06/2023
(33) Name of priority country	:U.S.A.
(86) International Application No	:PCT/US2024/028186
Filing Date	:07/05/2024
(87) International Publication No	:WO 2024/249040
(61) Patent of Addition to Application Number	:NA
Filing Date	:NA
(62) Divisional to Application Number	:NA
Filing Date	:NA

(71)**Name of Applicant :**
1)QUALCOMM INCORPORATED
Address of Applicant :Attn: International IP Administration 5775 Morehouse Drive San Diego, California 92121-1714 U.S.A.
(72)**Name of Inventor :**
1)XUE, Yisheng
2)BECZE, Karoly
3)ZHANG, Xiaoxia
4)LI, Junyi
5)SOLTANI, Morteza
6)LIU, Sam
7)SUN, Jing
8)BUSH, Jason
9)VU, Timothy
10)ALVAREZ, Sergio

(57) Abstract :
Methods, systems, and devices for wireless communications are described. A user equipment (UE) in an optical wireless communications system may utilize a curved focal plane of a condenser lens to communicate an optical wireless signal. An optical front-end (OFE) of the UE may include one or more optical communication components located at varying distances from the condenser lens on a curved focal plane of the condenser lens. Additionally or alternatively, the UE may adjust a position of one or more optical communication components on the curved focal plane. Additionally or alternatively, the OFE may include an array of condenser lenses and optical communication components each optically coupled with one or more condenser lenses. The UE may perform equal gain combination and/or equal ratio power splitting to communicate an optical wireless signal using the array of condenser lenses and optical communication components.

No. of Pages : 78 No. of Claims : 30

(12) PATENT APPLICATION PUBLICATION
(21) Application No.202547096387 A
(19) INDIA
(22) Date of filing of Application :07/10/2025
(43) Publication Date : 07/11/2025

(54) Title of the invention : UNIVERSAL FLASH STORAGE SHARED WRITE BOOSTER BUFFER ENHANCEMENTS

(51) International classification :G06F 12/02
(31) Priority Document No :63/506372
(32) Priority Date :06/06/2023
(33) Name of priority country :U.S.A.
(86) International Application No :PCT/US2024/023399
Filing Date :05/04/2024
(87) International Publication No :WO 2024/253745
(61) Patent of Addition to Application Number :NA
Filing Date :NA
(62) Divisional to Application Number :NA
Filing Date :NA

(71)**Name of Applicant :**
1)QUALCOMM INCORPORATED
Address of Applicant :ATTN: International IP Administration 5775 Morehouse Drive San Diego, California 92121-1714 U.S.A.
(72)**Name of Inventor :**
1)BHARATH SAI VARMA, Chintalapati
2)AKAVARAM, Santhosh Reddy
3)GAJAPAKA, Sai Naresh
4)VUONG, Hung
5)MUGADA, Radhakrishna
6)SRIVASTAVA, Prakhar
7)SAMBANGI, Vamsi Krishna

(57) Abstract :
Methods that may be performed by a universal flash storage (UFS) system of a computing device for optimizing usage of a shared write booster buffer to extend lifetime. The method may include writing data to a flash storage device including a plurality of logical units of memory by receiving a command identifying a logical unit among the plurality of logical units to store data and data for storage in the identified logical unit, obtaining information indicating a memory write type for the identified logical unit, and writing the received data to either a shared write booster buffer before writing to the identified logical unit of device storage or directly to the identified logical unit of device storage based on the obtained memory write type.

No. of Pages : 33 No. of Claims : 28

(12) PATENT APPLICATION PUBLICATION
(21) Application No.202547096388 A
(19) INDIA
(22) Date of filing of Application :07/10/2025
(43) Publication Date : 07/11/2025

(54) Title of the invention : USER EQUIPMENT (UE) COMMUNICATION RESOURCE PREDICTION FOR DETERMINING UPLINK RECEIVE BEAMS

(51) International classification	:H04W 72/044
(31) Priority Document No	:NA
(32) Priority Date	:NA
(33) Name of priority country	:NA
(86) International Application No	:PCT/CN2023/099071
Filing Date	:08/06/2023
(87) International Publication No	:WO 2024/250218
(61) Patent of Addition to Application Number	:NA
Filing Date	:NA
(62) Divisional to Application Number	:NA
Filing Date	:NA

(71)**Name of Applicant :**
1)QUALCOMM INCORPORATED
Address of Applicant :Attn: International IP Administration 5775 Morehouse Drive San Diego California 92121-1714 U.S.A.
(72)**Name of Inventor :**
1)LI, Qiaoyu
2)LUO, Tao
3)TAHERZADEH BOROUJENI, Mahmoud
4)CHALLA, Raghu Narayan

(57) Abstract :
Certain aspects of the present disclosure relate to enhanced signaling designs used to support beam prediction by a user equipment (UE) as part of determining a set of uplink receive beams to be used by a network entity to receive communications from the UE. A method includes receiving one or more signals communicated in a first set of communication resources associated with a first set of beams of a network entity and sending one or more identifiers of a second set of communication resources associated with a second set of beams of the network entity, wherein the second set of communication resources are predicted based on measuring the one or more signals, and wherein the one or more identifiers of the second set of communication resources are associated with a set of uplink receive beams of the network entity.

No. of Pages : 65 No. of Claims : 30

(12) PATENT APPLICATION PUBLICATION
(21) Application No.202547096389 A
(19) INDIA
(22) Date of filing of Application :07/10/2025
(43) Publication Date : 07/11/2025

(54) Title of the invention : HASH FILTER-BASED SELECTIVE-ROW REFRESH IN MEMORY DEVICE

(51) International classification	:G11C 11/406, G06F 13/16
(31) Priority Document No	:18/321535
(32) Priority Date	:22/05/2023
(33) Name of priority country	:U.S.A.
(86) International Application No	:PCT/US2024/023047
Filing Date	:04/04/2024
(87) International Publication No	:WO 2024/242772
(61) Patent of Addition to Application Number	:NA
Filing Date	:NA
(62) Divisional to Application Number	:NA
Filing Date	:NA

(71)**Name of Applicant :**
1)QUALCOMM INCORPORATED
Address of Applicant :ATTN: International IP Administration 5775 Morehouse Drive San Diego, California 92121-1714 U.S.A.
(72)**Name of Inventor :**
1)PANDA, Subham
2)MOHAMMED, Muzaffaruddin
3)JANNABHATLA, Sri Ananda Sai
4)PETNIKOTA, Venkatesh
5)RAMIDI, Jyothi

(57) Abstract :
This disclosure provides systems, methods, and devices for memory systems that support row-selective self-refresh operation while a host processor is in sleep mode. In a first aspect, a method of operating a memory system by a memory controller includes receiving, from the host device through the channel, a hash filter indicating a first subset of rows in a memory array; and refreshing, by the memory controller, a second subset of rows in the memory array based on the hash filter. The hash filter may be a Bloom filter, a Cuckoo filter, a linear probing filter, or a XOR filter. Other aspects and features are also claimed and described.

No. of Pages : 34 No. of Claims : 30

(12) PATENT APPLICATION PUBLICATION
(21) Application No.202547096413 A
(19) INDIA
(22) Date of filing of Application :07/10/2025
(43) Publication Date : 07/11/2025

(54) Title of the invention : IMPROVEMENTS TO ENERGY PERFORMANCE IN CO2 CAPTURE

(51) International classification :B01D 53/14
(31) Priority Document No :2303365.7
(32) Priority Date :08/03/2023
(33) Name of priority country :U.K.
(86) International Application No :PCT/EP2024/054298
Filing Date :20/02/2024
(87) International Publication No :WO 2024/184064
(61) Patent of Addition to Application Number :NA
Filing Date :NA
(62) Divisional to Application Number :NA
Filing Date :NA

(71)**Name of Applicant :**
1)EQUINOR LOW CARBON UK LIMITED
Address of Applicant :1 Kingdom Street London W2 6BD U.K.
(72)**Name of Inventor :**
1)FRANCESCHINI, Gervas
2)SALE, Gregory John
3)PARKER, Imogen Francesca

(57) Abstract :
A system for the capture of carbon dioxide, with an absorber to contact a CO2 containing gas stream with a sorbent, a desorber to release the CO2 from the sorbent and heat the sorbent to increase the sorbent temperature from a first temperature to a second temperature, a condenser, a lean return stream to return the sorbent from the desorber to the absorber, a flash vessel for reducing the pressure and temperature of the lean return stream and producing a flash vapor stream, a compressor for receiving the flash vapor stream and compressing it to produce a hot flash vapor stream and a controller to control the hot flash vapor stream temperature and inject it into the desorber at a temperature below a threshold.

No. of Pages : 12 No. of Claims : 11

(12) PATENT APPLICATION PUBLICATION
(21) Application No.202547096440 A
(19) INDIA
(22) Date of filing of Application :07/10/2025
(43) Publication Date : 07/11/2025

(54) Title of the invention : UE-CONTROLLED RIS AND AUTHORIZATION KEY FOR IN-COVERAGE UE

(51) International classification	:H04W 12/06	(71)**Name of Applicant :**
(31) Priority Document No	:NA	**1)QUALCOMM INCORPORATED**
(32) Priority Date	:NA	Address of Applicant :5775 Morehouse Drive, San Diego California 92121-1714 U.S.A.
(33) Name of priority country	:NA	
(86) International Application No	:PCT/CN2023/096756	(72)**Name of Inventor :**
Filing Date	:29/05/2023	**1)YIN, Mingxi**
(87) International Publication No	:WO 2024/243764	**2)HUANG, Min**
(61) Patent of Addition to Application Number	:NA	**3)XU, Hao**
Filing Date	:NA	
(62) Divisional to Application Number	:NA	
Filing Date	:NA	

(57) Abstract :
A method for wireless communication at a user equipment (UE) and related apparatus are provided. In the method, the UE transmits, to a network entity, an authorization request for controlling a reconfigurable intelligent surface (RIS), and receives, from the network entity, an authorization configuration for controlling the RIS. The UE further transmits, to the RIS, authorization information based on the authorization configuration, and transmits, in response to the authorization information being validated by the RIS, a control signal to the RIS for controlling the RIS. The method improves the efficiency and security of UE controlling RIS, while avoiding control collisions when multiple UEs attempt to control the same RIS.

No. of Pages : 57 No. of Claims : 30

(12) PATENT APPLICATION PUBLICATION
(21) Application No.202547096441 A
(19) INDIA
(22) Date of filing of Application :07/10/2025
(43) Publication Date : 07/11/2025

(54) Title of the invention : DEMODULATION REFERENCE SIGNAL PORT COMBINATIONS IN ACCORDANCE WITH A CAPABILITY OF A USER EQUIPMENT ASSOCIATED WITH 8-LAYER DOWNLINK MULTIPLE INPUT MULTIPLE OUTPUT COMMUNICATIONS

(51) International classification	:H04B 7/0452, H04W 72/04
(31) Priority Document No	:NA
(32) Priority Date	:NA
(33) Name of priority country	:NA
(86) International Application No	:PCT/CN2023/093864
Filing Date	:12/05/2023
(87) International Publication No	:WO 2024/234139
(61) Patent of Addition to Application Number	:NA
Filing Date	:NA
(62) Divisional to Application Number	:NA
Filing Date	:NA

(71)**Name of Applicant :**
1)QUALCOMM INCORPORATED
Address of Applicant :5775 Morehouse Drive, San Diego California 92121-1714 U.S.A.
(72)**Name of Inventor :**
1)HUANG, Yi
2)GAAL, Peter
3)YOO, Jae Won
4)XIAO, Kexin

(57) Abstract :
Various aspects of the present disclosure generally relate to wireless communication. Various aspects relate generally to multiple input multiple output (MIMO) communications. Some aspects more specifically relate to signalling of demodulation reference signal (DMRS) port combinations in accordance with a capability of a UE associated with 8-layer downlink MIMO communications. In some examples, a UE may transmit a capability communication that indicates whether the UE supports 8-layer MIMO communications and may receive, in association with the capability communication, an indication of one or more DMRS port combinations to be used for receiving downlink communications.

No. of Pages : 58 No. of Claims : 35

(12) PATENT APPLICATION PUBLICATION
(21) Application No.202547096442 A
(19) INDIA
(22) Date of filing of Application :07/10/2025
(43) Publication Date : 07/11/2025

(54) Title of the invention : MANAGING RELAY LINK BANDWIDTH

(51) International classification :H04W 4/80
(31) Priority Document No :63/495008
(32) Priority Date :07/04/2023
(33) Name of priority country :U.S.A.
(86) International Application No :PCT/US2024/023257
Filing Date :05/04/2024
(87) International Publication No :WO 2024/211698
(61) Patent of Addition to Application Number :NA
Filing Date :NA
(62) Divisional to Application Number :NA
Filing Date :NA

(71)**Name of Applicant :**
1)GOOGLE LLC
Address of Applicant :1600 Amphitheatre Parkway Mountain View, California 94043 U.S.A.
(72)**Name of Inventor :**
1)KUMAR, Sunil

(57) Abstract :
Various arrangements for managing a relay link bandwidth over Bluetooth Classic and Bluetooth Low Energy (BLE) are described herein. According to techniques described herein, the Bluetooth bandwidth used by the earbuds for relay traffic between the earbuds is directed at being optimized for the audio use cases by using a dynamic placement scheme and configuring a secondary earbud (e.g., an earbud that does not include an established connection with the AH) to be in the central role on the relay link between the earbuds. In the dynamic placement scheme, instead of reserving a predetermined number of slots for the voice traffic before a predetermined number of slots for the relay traffic, the relay traffic can be dynamically placed/moved after the voice traffic ends if voice traffic doesn't use all the reserved bandwidth and hence, some of the voice traffic's reserved bandwidth could be used for the relay traffic.

No. of Pages : 15 No. of Claims : 16

(12) PATENT APPLICATION PUBLICATION
(21) Application No.202547096450 A
(19) INDIA
(22) Date of filing of Application :07/10/2025
(43) Publication Date : 07/11/2025

(54) Title of the invention : ENCODING DEVICE, DECODING DEVICE, ENCODING METHOD, AND DECODING METHOD

(51) International classification :G06T 9/00
(31) Priority Document No :63/459016
(32) Priority Date :13/04/2023
(33) Name of priority country :U.S.A.
(86) International Application No :PCT/JP2024/014562
Filing Date :10/04/2024
(87) International Publication No :WO 2024/214745
(61) Patent of Addition to Application Number :NA
Filing Date :NA
(62) Divisional to Application Number :NA
Filing Date :NA

(71)**Name of Applicant :**
1)PANASONIC INTELLECTUAL PROPERTY CORPORATION OF AMERICA
Address of Applicant :2050 W 190th Street, Suite 450, Torrance, California 90504 U.S.A.
(72)**Name of Inventor :**
1)NISHI, Takahiro

(57) Abstract :
An encoding device (100) is provided with: a memory (152); and a circuit (151) that can access the memory (152). In operation, the circuit (151) encodes displacement data used for deriving a displacement vector for each of a plurality of vertices included in a three-dimensional mesh, wherein the displacement vector indicates displacement of each vertex from a first position, generated by using a base mesh, the plurality of vertices include a first vertex, a second vertex, and a third vertex, and the displacement data of the first vertex indicates the difference between the displacement vector of the first vertex and a composite vector obtained by combining the displacement vector of the second vertex and the displacement vector of the third vertex.

No. of Pages : 97 No. of Claims : 12

(12) PATENT APPLICATION PUBLICATION
(21) Application No.202547096451 A
(19) INDIA
(22) Date of filing of Application :07/10/2025
(43) Publication Date : 07/11/2025

(54) Title of the invention : SENSORED INSULATION PLUG

(51) International classification	:G01R 15/16, G01R 15/06
(31) Priority Document No	:63/495321
(32) Priority Date	:11/04/2023
(33) Name of priority country	:U.S.A.
(86) International Application No	:PCT/IB2024/052850
Filing Date	:25/03/2024
(87) International Publication No	:WO 2024/213957
(61) Patent of Addition to Application Number	:NA
Filing Date	:NA
(62) Divisional to Application Number	:NA
Filing Date	:NA

(71)**Name of Applicant :**
1)3M INNOVATIVE PROPERTIES COMPANY
Address of Applicant :3M Center Post Office Box 33427 Saint Paul, Minnesota 55133-3427 U.S.A.
(72)**Name of Inventor :**
1)GUNDEL, Douglas B.
2)STOLLWERCK, Gunther A. J.

(57) Abstract :
Sensored insulation plug (1, 2) for a medium voltage or high-voltage separable connector (10), operable to sense an elevated voltage, and comprising a plug body (140), a contact piece (175), connectable with the connector on elevated voltage, an embedded discrete coupling capacitor (151), and an integrated sensing capacitor (150), operable as a high-voltage capacitor in a sensing voltage divider for sensing the elevated voltage and comprising a high-voltage electrode (162), a tubular sensing electrode (170), embedded in the insulating material (610) and arranged around an axial section of the high-voltage electrode; and a dielectric (180). The coupling capacitor (151) comprises a coupling electrode (160), connected to the contact piece, and an opposed counter electrode (171) and is operable to harvest energy, superimpose signals over the elevated voltage, extract signals from the elevated voltage, detect a partial discharge signal in the elevated voltage, detect the presence or absence of an elevated voltage, sense an elevated voltage at a low accuracy or detect a zero crossing of the elevated voltage.

No. of Pages : 34 No. of Claims : 15

(12) PATENT APPLICATION PUBLICATION
(21) Application No.202547096458 A
(19) INDIA
(22) Date of filing of Application :07/10/2025
(43) Publication Date : 07/11/2025

(54) Title of the invention : COMMUNICATION DEVICE, COMMUNICATION DEVICE CONTROL METHOD, AND PROGRAM

(51) International classification	:H04W 76/15, H04W 84/12
(31) Priority Document No	:2023-065262
(32) Priority Date	:12/04/2023
(33) Name of priority country	:Japan
(86) International Application No	:PCT/JP2024/012965
Filing Date	:29/03/2024
(87) International Publication No	:WO 2024/214564
(61) Patent of Addition to Application Number	:NA
Filing Date	:NA
(62) Divisional to Application Number	:NA
Filing Date	:NA

(71)**Name of Applicant :**
1)CANON KABUSHIKI KAISHA
Address of Applicant :30-2, Shimomaruko 3-chome, Ohta-ku, Tokyo 1468501 Japan
(72)**Name of Inventor :**
1)TAKADA Tomoyuki

(57) Abstract :
This communication device, which is operable as an access point, establishes a multi-link connection with another communication device in response to a connection request from the other communication device. When establishing the multi-link connection, the communication device transmits information related to an operation in an Enhanced Multi-Link Single Radio (EMLSR) mode.

No. of Pages : 45 No. of Claims : 18

(12) PATENT APPLICATION PUBLICATION
(21) Application No.202547096495 A
(19) INDIA
(22) Date of filing of Application :07/10/2025
(43) Publication Date : 07/11/2025

(54) Title of the invention : DEPLOYMENT CONTROL OVER CLOUD RESOURCES

(51) International classification	:G06F 9/50, G06F 8/60
(31) Priority Document No	:63/462875
(32) Priority Date	:28/04/2023
(33) Name of priority country	:U.S.A.
(86) International Application No	:PCT/US2024/026756
Filing Date	:29/04/2024
(87) International Publication No	:WO 2024/227130
(61) Patent of Addition to Application Number	:NA
Filing Date	:NA
(62) Divisional to Application Number	:NA
Filing Date	:NA

(71)**Name of Applicant :**
1)ORACLE INTERNATIONAL CORPORATION
Address of Applicant :500 Oracle Parkway, M/S 50P7 Redwood Shores, California 94065 U.S.A.
(72)**Name of Inventor :**
1)BOLLA, Jason
2)VOGEL, Daniel M.

(57) Abstract :
Techniques for controlling resource deployments in a cloud partition of a cloud environment are disclosed. A cloud service provider (CSP) operates the cloud environment where its customers can specify two-tiered constraints on deployments to their respective partitions (i.e., regions or realms). A first deployment constraint may be a global constraint set by the CSP and a second deployment constraint may be a partition-specific deployment constraint set by a customer of the CSP. Each deployment constraint applies to the changes/updates that can be made to one or more specific partitions. A global deployment orchestrator conditions a deployment, at least in part, on whether the deployment satisfies the two-tiers of deployment constraint(s).

No. of Pages : 46 No. of Claims : 21

(12) PATENT APPLICATION PUBLICATION
(21) Application No.202547096496 A
(19) INDIA
(22) Date of filing of Application :07/10/2025
(43) Publication Date : 07/11/2025

(54) Title of the invention : A TAPPED LINEAR LED DRIVING ARRANGEMENT

(51) International classification	:H05B 45/30, H05B 45/48, H05B 45/59
(31) Priority Document No	:23167187.6
(32) Priority Date	:07/04/2023
(33) Name of priority country	:EPO
(86) International Application No	:PCT/EP2024/058729
Filing Date	:28/03/2024
(87) International Publication No	:WO 2024/208761
(61) Patent of Addition to Application Number	:NA
Filing Date	:NA
(62) Divisional to Application Number	:NA
Filing Date	:NA

(71)**Name of Applicant :**
1)SIGNIFY HOLDING B.V.
Address of Applicant :High Tech Campus 48 5656 AE Eindhoven Netherlands
(72)**Name of Inventor :**
1)ARULANDU, Karnekumar
2)TAO, Haimin

(57) Abstract :
A tapped linear LED driving arrangement. The arrangement comprises a first LED module, a charge storage device and at least one other LED module. The first LED module comprises an LED set and a current controller connected in series. Each other LED module comprises an LED set and a switch arrangement connected in parallel. The charge storage device is connected in parallel to the first LED module. The current controller controls the current flow through the LED set of the first LED module, to facilitate a response to the bypassing of the LED set of any other LED module by their respective switch arrangements.

No. of Pages : 17 No. of Claims : 11

(12) PATENT APPLICATION PUBLICATION
(21) Application No.202547096497 A
(19) INDIA
(22) Date of filing of Application :07/10/2025
(43) Publication Date : 07/11/2025

(54) Title of the invention : RIPPLE CONTROL OF AN LED DRIVING CIRCUIT

(51) International classification	:H05B 45/36, H05B 45/59
(31) Priority Document No	:PCT/CN2023/087003
(32) Priority Date	:07/04/2023
(33) Name of priority country	:China
(86) International Application No	:PCT/EP2024/058937
Filing Date	:02/04/2024
(87) International Publication No	:WO 2024/208825
(61) Patent of Addition to Application Number	:NA
Filing Date	:NA
(62) Divisional to Application Number	:NA
Filing Date	:NA

(71)**Name of Applicant :**
1)SIGNIFY HOLDING B.V.
Address of Applicant :High Tech Campus 48 5656 AE Eindhoven Netherlands
(72)**Name of Inventor :**
1)WANG, Gang
2)SHI, Liang
3)FU, Jie

(57) Abstract :
A mechanism for selectively suppressing or allowing ripple into an output DC power for driving an LED lighting arrangement. Occupancy information is obtained and used to control the enabling and disabling of a smoothing circuit that attenuates ripple in the output DC power.

No. of Pages : 23 No. of Claims : 15

(12) PATENT APPLICATION PUBLICATION
(19) INDIA
(22) Date of filing of Application :07/10/2025
(21) Application No.202547096498 A
(43) Publication Date : 07/11/2025

(54) Title of the invention : ULTRA-EFFICIENT DIMMABLE LED DRIVER

(51) International classification	:H05B 45/3725, H05B 45/38
(31) Priority Document No	:23167390.6
(32) Priority Date	:11/04/2023
(33) Name of priority country	:EPO
(86) International Application No	:PCT/EP2024/059421
Filing Date	:08/04/2024
(87) International Publication No	:WO 2024/213491
(61) Patent of Addition to Application Number	:NA
Filing Date	:NA
(62) Divisional to Application Number	:NA
Filing Date	:NA

(71)**Name of Applicant :**
1)SIGNIFY HOLDING B.V.
Address of Applicant :High Tech Campus 48 5656 AE Eindhoven Netherlands
(72)**Name of Inventor :**
1)ZIJLMAN, Theo, Gerrit
2)HORIKX, Werner, Friedrich
3)VAN EEUWIJK, Alexander, Henricus, Waltherus
4)HONTELE, Bertrand, Johan, Edward
5)ARULANDU, Karnekumar
6)TAO, Haimin

(57) Abstract :
The invention relates to a driver circuit for powering a light source. The driver circuit comprises a first driver adapted to provide power to the light source and having a first output power at a first optimum power conversion efficiency, a second driver adapted to provide power to the light source and having a second output power at a second optimum power conversion efficiency, a controller for enabling and disabling the first driver with a first duty cycle and the second driver with a second duty cycle. The controller is adapted to receive a dimming signal and arranged to determine the first duty cycle and the second duty based on a dimming signal such that the first driver operates at the first optimum power conversion efficiency and the second driver operates at the second optimum power conversion efficiency when active.

No. of Pages : 27 No. of Claims : 15

(12) PATENT APPLICATION PUBLICATION
(21) Application No.202547096499 A
(19) INDIA
(22) Date of filing of Application :07/10/2025
(43) Publication Date : 07/11/2025

(54) Title of the invention : SUSTAINABLE 3D PRINTED SPARKLE AND HIDE STRUCTURE

(51) International classification	:B29C 64/118, B29C 64/236, B33Y 10/00, B33Y 30/00, B33Y 80/00
(31) Priority Document No	:23169375.5
(32) Priority Date	:24/04/2023
(33) Name of priority country	:EPO
(86) International Application No	:PCT/EP2024/060074
Filing Date	:12/04/2024
(87) International Publication No	:WO 2024/223342
(61) Patent of Addition to Application Number	:NA
Filing Date	:NA
(62) Divisional to Application Number	:NA
Filing Date	:NA

(71)**Name of Applicant :**
1)SIGNIFY HOLDING B.V.
Address of Applicant :High Tech Campus 48 5656 AE Eindhoven Netherlands
(72)**Name of Inventor :**
1)BUKKEMS, Peter, Johannes, Martinus

(57) Abstract :
The invention provides a method for producing a 3D item by means of fused deposition modelling, the method comprising: a 3D printing stage comprising layer-wise 3D printable material, to provide the 3D item comprising 3D printed material, wherein the 3D item comprises a plurality of layers of 3D printed material, wherein: (a) the method comprises generating a stack comprising n layers of 3D printed material on top of each other by depositing 3D printable material along n printing paths (APn), wherein the n printing paths (APn) and printing conditions are selected such that the stack comprises stack sections and stack modulations; (b) for the stack sections applies: (i) an nth layer is configured on an (n-1)th layer and/or (ii) the (n-1)th layer is configured on an (n-2)th layer; (c) for (at least part of) the stack modulations applies: an nth layer is partly configured on an (n-1)th layer and partly on an (n-2)th layer, and the (n-1)th layer is partly configured between the nth layer and the (n- 2)th layer; and (d) n=3, and the 3D printable material comprises a light transmissive material.

No. of Pages : 44 No. of Claims : 15

(12) PATENT APPLICATION PUBLICATION
(21) Application No.202547096502 A
(19) INDIA
(22) Date of filing of Application :07/10/2025
(43) Publication Date : 07/11/2025

(54) Title of the invention : QUANTIZATION OFFSETS FOR DEPENDENT QUANTIZATION IN VIDEO CODING

(51) International classification	:H04N 19/126, H04N 19/176
(31) Priority Document No	:63/507371
(32) Priority Date	:09/06/2023
(33) Name of priority country	:U.S.A.
(86) International Application No	:PCT/US2024/032816
Filing Date	:06/06/2024
(87) International Publication No	:WO 2024/254314
(61) Patent of Addition to Application Number	:NA
Filing Date	:NA
(62) Divisional to Application Number	:NA
Filing Date	:NA

(71)**Name of Applicant :**
1)QUALCOMM INCORPORATED
Address of Applicant :ATTN: International IP Administration 5775 Morehouse Drive San Diego, California 92121-1714 U.S.A.
(72)**Name of Inventor :**
1)KARCZEWICZ, Marta
2)COBAN, Muhammed Zeyd
3)NIKITIN, Pavel

(57) Abstract :
A method of processing video data includes determining a quantization level for a coefficient of a current block from a plurality of quantization levels; determining an offset value based on the quantization level, wherein the offset value is a first offset value based on the quantization level being a first quantization level or a second, different offset value based on the quantization level being a second quantization level; determining a quantization parameter or an inverse-quantization parameter for the coefficient based on the determined offset value; and as part of encoding or decoding the current block, performing one of quantization or inverse-quantization for the coefficient based on the determined quantization parameter or the determined inverse-quantization parameter.

No. of Pages : 62 No. of Claims : 20

(12) PATENT APPLICATION PUBLICATION
(21) Application No.202547096503 A
(19) INDIA
(22) Date of filing of Application :07/10/2025
(43) Publication Date : 07/11/2025

(54) Title of the invention : REFERENCE SIGNAL CONFIGURATION FOR TARGET SENSING

(51) International classification :G01S 13/00
(31) Priority Document No :NA
(32) Priority Date :NA
(33) Name of priority country :NA
(86) International Application No :PCT/CN2023/085727
Filing Date :31/03/2023
(87) International Publication No :WO 2024/197911
(61) Patent of Addition to Application Number :NA
Filing Date :NA
(62) Divisional to Application Number :NA
Filing Date :NA

(71)**Name of Applicant :**
1)NOKIA TECHNOLOGIES OY
Address of Applicant :Karakaari 7, Espoo, 02610 Finland
(72)**Name of Inventor :**
1)WANG, Wen Jian
2)GAO, Fei
3)LIU, Jian Guo
4)ZHOU, Yanni
5)XU, Chao Jun

(57) Abstract :
Example embodiments of the present disclosure relate to reference signal (RS) configuration for target sensing. A terminal device determines a measurement result associated with a signal quality of target sensing to be performed by the terminal device. The terminal device transmits, to a network device, capability information regarding the target sensing, the capability information at least comprising the measurement result. The terminal device receives, from the network device, a reference signal configuration for the target sensing.

No. of Pages : 37 No. of Claims : 10

(12) PATENT APPLICATION PUBLICATION
(21) Application No.202547096504 A
(19) INDIA
(22) Date of filing of Application :07/10/2025
(43) Publication Date : 07/11/2025

(54) Title of the invention : EXTENDED REALITY (XR) DEVICE MANAGEMENT USING EYE TRACKING SENSORS

(51) International classification	:G06F 3/01, G06F 3/04842
(31) Priority Document No	:202341033507
(32) Priority Date	:12/05/2023
(33) Name of priority country	:India
(86) International Application No	:PCT/US2023/075745
Filing Date	:02/10/2023
(87) International Publication No	:WO 2024/237951
(61) Patent of Addition to Application Number	:NA
Filing Date	:NA
(62) Divisional to Application Number	:NA
Filing Date	:NA

(71)**Name of Applicant :**
1)QUALCOMM INCORPORATED
Address of Applicant :ATTN: International IP Administration 5775 Morehouse Drive San Diego, California 92121-1714 U.S.A.
(72)**Name of Inventor :**
1)MANOHARAN, Manmohan
2)AHUJA, Kapil
3)HOLLAND, Wesley James
4)BOOTH, Simon Peter William
5)BAHETI, Pawan Kumar

(57) Abstract :
Systems and techniques are provided for imaging. For example, a process can include determining a direction of gaze of a user toward one or more displays, wherein the direction of gaze is based on image data obtained using one or more cameras. The process can include determining a region of the one or more displays corresponding to the direction of gaze of the user. The process can include generating one or more graphical user interface (GUI) control actions indicative of a respective configuration of a GUI associated with the one or more displays, wherein the one or more GUI control actions are based on the determined region. The process can include outputting, using the one or more displays and based on the one or more GUI control actions, the respective configuration of the GUI.

No. of Pages : 54 No. of Claims : 30

(12) PATENT APPLICATION PUBLICATION
(21) Application No.202547096505 A
(19) INDIA
(22) Date of filing of Application :07/10/2025
(43) Publication Date : 07/11/2025

(54) Title of the invention : MECHANISM FOR SMALL DATA TRANSMISSION

(51) International classification :H04W 28/02
(31) Priority Document No :NA
(32) Priority Date :NA
(33) Name of priority country :NA
(86) International Application No :PCT/CN2023/085262
Filing Date :30/03/2023
(87) International Publication No :WO 2024/197750
(61) Patent of Addition to Application Number :NA
Filing Date :NA
(62) Divisional to Application Number :NA
Filing Date :NA

(71)**Name of Applicant :**
1)NOKIA TECHNOLOGIES OY
Address of Applicant :Karakaari 7 02610 Espoo Finland
(72)**Name of Inventor :**
1)TURTINEN, Samuli Heikki
2)KOSKINEN, Jussi-Pekka
3)WU, Chunli

(57) Abstract :
Example embodiments of the present disclosure related to configuration small data transmission (SDT). A terminal device transmits, to a network device, information indicating a set of radio bearers applicable to be configured in at least one small data transmission configuration. In this way, the network device is able to properly configure the radio bear (s) for the SDT.

No. of Pages : 27 No. of Claims : 15

(12) PATENT APPLICATION PUBLICATION

(21) Application No.202547096506 A

(19) INDIA

(22) Date of filing of Application :07/10/2025

(43) Publication Date : 07/11/2025

(54) Title of the invention : APPARATUS, METHOD, AND COMPUTER PROGRAM FOR REDUCING SETUP DELAY IN DUAL CONNECTIVITY OR CARRIER AGGREGATION

(51) International classification	:H04L 5/00, H04W 24/10, H04W 76/15
(31) Priority Document No	:2304042.1
(32) Priority Date	:20/03/2023
(33) Name of priority country	:U.K.
(86) International Application No	:PCT/EP2024/055692
Filing Date	:05/03/2024
(87) International Publication No	:WO 2024/194007
(61) Patent of Addition to Application Number	:NA
Filing Date	:NA
(62) Divisional to Application Number	:NA
Filing Date	:NA

(71)**Name of Applicant :**

1)NOKIA TECHNOLOGIES OY

Address of Applicant :Karakaari 7 02610 Espoo Finland

(72)**Name of Inventor :**

1)DALSGAARD, Lars

2)KAINULAINEN, Jani-Pekka

3)DIMNIK, Riikka Karoliina

4)KARIMIDEHKORDI, Ali

5)KOLEHMAINEN, Niko

(57) Abstract :

There is provided a method, computer program and apparatus for causing a user equipment to perform: implementing dual connectivity and/or carrier aggregation within a communications network, the means for implementing dual connectivity and/or carrier aggregation within a communications network being able to perform simultaneous measurements for serving and another carrier, the another carrier being a dual connectivity and/or carrier aggregation target carrier; determining, following an idle and/or an inactive mode of operation, initiating a connection; and implementing a measurement behaviour starting from the determining, the measurement behaviour configured to reduce setup delay with respect to the implementing dual connectivity and/or carrier aggregation.

No. of Pages : 39 No. of Claims : 15

(12) PATENT APPLICATION PUBLICATION
(21) Application No.202547096508 A
(19) INDIA
(22) Date of filing of Application :07/10/2025
(43) Publication Date : 07/11/2025

(54) Title of the invention : VALIDITY DURATION OF A CARRIER PHASE MEASUREMENT

(51) International classification	:G01S 5/00, G01S 5/02
(31) Priority Document No	:63/493487
(32) Priority Date	:31/03/2023
(33) Name of priority country	:U.S.A.
(86) International Application No	:PCT/IB2024/052967
Filing Date	:27/03/2024
(87) International Publication No	:WO 2024/201331
(61) Patent of Addition to Application Number	:NA
Filing Date	:NA
(62) Divisional to Application Number	:NA
Filing Date	:NA

(71)**Name of Applicant :**
1)NOKIA TECHNOLOGIES OY
Address of Applicant :Karakaari 7 02610 Espoo Finland
(72)**Name of Inventor :**
1)KEATING, Ryan
2)CHA, Hyun-Su
3)JOSHI, Satya Krishna

(57) Abstract :
A method, apparatus, and computer program product determine, provide, and/or utilize a validity duration of a carrier phase (CP) measurement. The validity duration of a carrier phase measurement enables reuse of certain carrier phase measurements used in a double differential carrier phase (DD-CP) measurement, thereby reducing signaling overhead in certain positioning functions of certain systems. The validity duration of a CP measurement can be implemented at a terminal device, referencing positioning device, network node, location management function, and/or the like, and can be utilized in downlink and/or uplink transmission.

No. of Pages : 34 No. of Claims : 27

(12) PATENT APPLICATION PUBLICATION
(21) Application No.202547096537 A
(19) INDIA
(22) Date of filing of Application :07/10/2025
(43) Publication Date : 07/11/2025

(54) Title of the invention : TRAY FOR A CABINET DRAWER

(51) International classification	:A47B 88/42, A47B 88/90, A47B 96/06
(31) Priority Document No	:20 2023 101 862.9
(32) Priority Date	:13/04/2023
(33) Name of priority country	:Germany
(86) International Application No	:PCT/EP2024/057186
Filing Date	:18/03/2024
(87) International Publication No	:WO 2024/213348
(61) Patent of Addition to Application Number	:NA
Filing Date	:NA
(62) Divisional to Application Number	:NA
Filing Date	:NA

(71)**Name of Applicant :**
1)KESSEBÖHMER HOLDING KG
Address of Applicant :Mindener Str. 208 49152 Bad Essen Germany
(72)**Name of Inventor :**
1)LAUMERICH, Volker
2)TÖNS, Maximilian
3)LÜCKE, Matthias
4)BAUMER, Werner

(57) Abstract :
The invention relates to a tray (10, 10a-10f, 10a'-10f') for a cabinet drawer (200), having at least one attachment body (14a, 14b) for attaching to a drawer frame (100, 100a, 100b) of the cabinet drawer (200) which can be pulled out from a cabinet body, and a tray base body (12) with a receiving region (11) for storing items, wherein the at least one attachment body (14a, 14b) and the tray base body (12) form a plug-in system, by means of which the attachment body (14a, 14b) is plug-connected to the tray base body (12) in a reversible and non-destructively detachable manner.

No. of Pages : 23 No. of Claims : 25

(12) PATENT APPLICATION PUBLICATION

(21) Application No.202547096545 A

(19) INDIA

(22) Date of filing of Application :07/10/2025

(43) Publication Date : 07/11/2025

(54) Title of the invention : DIGITAL SENSOR AND MONITORING SYSTEM FOR SWITCHGEAR PROTECTION, MONITORING AND CONTROL USING ROGOWSKI COIL AND CAPACITIVE VOLTAGE DIVIDER-LIKE DEVICES INTEGRATED INTO THE SWITCHGEAR'S LINE OR LOAD, PRIMARY CURRENT PATHS

(51) International classification	:H01H 9/02, H02H 7/26, G01R 22/00, G01R 33/028
(31) Priority Document No	:18/196743
(32) Priority Date	:12/05/2023
(33) Name of priority country	:U.S.A.
(86) International Application No	:PCT/US2024/027624
Filing Date	:03/05/2024
(87) International Publication No	:WO 2024/238168
(61) Patent of Addition to Application Number	:NA
Filing Date	:NA
(62) Divisional to Application Number	:NA
Filing Date	:NA

(71)**Name of Applicant :**

1)HACK, Bruce

Address of Applicant :113 Sunnyside Drive Yonkers, NY 10705 U.S.A.

(72)**Name of Inventor :**

1)HACK, Bruce

(57) Abstract :

A device for protecting, controlling, and monitoring electrical medium range switchgear comprising use of a Rogowski coil embedded in the bottle of a switchgear and surrounding the Mains flow of voltage and current, a capacitive or similar voltage divider, also surrounding the Mains and extending around the bottle, and providing analog signals from those devices to an integrated circuit for conversion to digital signals, and then transmitting as output the digital signals to a data accumulator where the same are optionally time stamped and compared to one another, to a standard or to themselves at a different time.

No. of Pages : 47 No. of Claims : 13

(12) PATENT APPLICATION PUBLICATION
(21) Application No.202547096546 A
(19) INDIA
(22) Date of filing of Application :07/10/2025
(43) Publication Date : 07/11/2025

(54) Title of the invention : MANAGING ANIMATION SPEED OF ZOOM ANIMATION

(51) International classification	:G06F 3/0484
(31) Priority Document No	:NA
(32) Priority Date	:NA
(33) Name of priority country	:NA
(86) International Application No	:PCT/CN2023/097717
Filing Date	:01/06/2023
(87) International Publication No	:WO 2024/243949
(61) Patent of Addition to Application Number	:NA
Filing Date	:NA
(62) Divisional to Application Number	:NA
Filing Date	:NA

(71)**Name of Applicant :**
1)QUALCOMM INCORPORATED
Address of Applicant :5775 Morehouse Drive San Diego, CA 92121-1714 U.S.A.
(72)**Name of Inventor :**
1)LI, Zhiguo
2)ZHANG, Nan
3)XU, Yongjun

(57) Abstract :
Various embodiments include systems and methods for managing an animation speed of a zoom animation presented on a display of a computing device. Various embodiments include determining a distance between a display of the computing device and eyes of a user, and adjusting a speed of a zoom animation presented on the display based on the determined distance between the display and the eyes of the user.

No. of Pages : 22 No. of Claims : 24

(12) PATENT APPLICATION PUBLICATION

(21) Application No.202547096547 A

(19) INDIA

(22) Date of filing of Application :07/10/2025

(43) Publication Date : 07/11/2025

(54) Title of the invention : TRANSMITTER STRUCTURES FOR LOW POWER DEVICES

(51) International classification	:H04L 27/20, H03M 13/27, H04L 1/00
(31) Priority Document No	:NA
(32) Priority Date	:NA
(33) Name of priority country	:NA
(86) International Application No	:PCT/CN2023/094439
Filing Date	:16/05/2023
(87) International Publication No	:WO 2024/234278
(61) Patent of Addition to Application Number	:NA
Filing Date	:NA
(62) Divisional to Application Number	:NA
Filing Date	:NA

(71)**Name of Applicant :**

1)QUALCOMM INCORPORATED

Address of Applicant :Attn: International IP Administration 5775 Morehouse Drive San Diego, California 92121-1714 U.S.A.

(72)**Name of Inventor :**

1)XU, Changlong

2)WU, Liangming

3)WEI, Chao

4)LIU, Wei

5)JIA, Yinhua

6)LI, Jian

7)XU, Hao

(57) Abstract :

Certain aspects of the present disclosure provide techniques for wireless communications by a wireless communications device. A method includes segmenting a first set of bits into a plurality of blocks of bits. The method further includes encoding each block of bits of the plurality of blocks of bits to generate a plurality of encoded blocks of bits. The method further includes concatenating the plurality of encoded blocks of bits to generate a second set of bits. The method further includes interleaving the second set of bits to generate a third set of bits. The method further includes modulating a carrier waveform with data based on the third set of bits. The method further includes transmitting the modulated carrier waveform.

No. of Pages : 42 No. of Claims : 30

(12) PATENT APPLICATION PUBLICATION
(21) Application No.202547096548 A
(19) INDIA
(22) Date of filing of Application :07/10/2025
(43) Publication Date : 07/11/2025

(54) Title of the invention : BEAM PANIC CONFIGURATION

(51) International classification	:H04B 7/06, H04B 7/08
(31) Priority Document No	:18/327810
(32) Priority Date	:01/06/2023
(33) Name of priority country	:U.S.A.
(86) International Application No	:PCT/US2024/030588
Filing Date	:22/05/2024
(87) International Publication No	:WO 2024/249215
(61) Patent of Addition to Application Number	:NA
Filing Date	:NA
(62) Divisional to Application Number	:NA
Filing Date	:NA

(71)**Name of Applicant :**
1)QUALCOMM INCORPORATED
Address of Applicant :Attn: International IP Administration 5775 Morehouse Drive San Diego, California 92121-1714 U.S.A.
(72)**Name of Inventor :**
1)GAO, Kang
2)ZHU, Jun
3)LAGHATE, Mihir Vijay
4)CHALLA, Raghu Narayan

(57) Abstract :
Method and apparatus for a beam panic design. The apparatus measures at least one subset of beams of a set of beams received from a network entity. The apparatus monitors for a change within a subset of the measured beams having a highest signal quality. The apparatus measures a rate of the change of the subset of the measured beams having the highest signal quality, in response to detection of an occurrence of the change of the subset of the measured beams having the highest signal quality. The apparatus initiates a beam panic mode based on at least the rate of change of the subset of the measured beams having the highest signal quality is less than a first threshold.

No. of Pages : 36 No. of Claims : 30

(12) PATENT APPLICATION PUBLICATION
(21) Application No.202547096549 A
(19) INDIA
(22) Date of filing of Application :07/10/2025
(43) Publication Date : 07/11/2025

(54) Title of the invention : SPARE MEMORY MANAGEMENT IN DATA STORAGE DEVICE

(51) International classification	:G06F 3/06, G06F 12/02
(31) Priority Document No	:18/327691
(32) Priority Date	:01/06/2023
(33) Name of priority country	:U.S.A.
(86) International Application No	:PCT/US2024/023806
Filing Date	:10/04/2024
(87) International Publication No	:WO 2024/248949
(61) Patent of Addition to Application Number	:NA
Filing Date	:NA
(62) Divisional to Application Number	:NA
Filing Date	:NA

(71)**Name of Applicant :**
1)QUALCOMM INCORPORATED
Address of Applicant :Attn: International IP Administration 5775 Morehouse Drive San Diego, California 92121-1714 U.S.A.
(72)**Name of Inventor :**
1)AKAVARAM, Santhosh Reddy
2)SRIVASTAVA, Prakhar
3)ANUMALA, Sridhar
4)VUONG, Hung
5)JABREVA, Sonali
6)KUMARI, Khushboo

(57) Abstract :
Aspects of the present disclosure are directed to techniques and procedures for storing data in a data storage device that uses nonvolatile memory (NVM) to store data. The NVM can be organized into logical units that are assigned respective logical unit numbers. The data storage device can report to a host the amount of spare blocks needed for one or more logical units (LUs), and then the host can relinquish some memory blocks to be reallocated as spare blocks. The data storage device can implement a spare block resource management policy per LU and allocate a predetermined amount of spare blocks per LU. The data storage device can implement a spare block resource management policy per memory type and allocate a predetermined amount of spare blocks for LUs with the same memory type.

No. of Pages : 21 No. of Claims : 30

(12) PATENT APPLICATION PUBLICATION
(21) Application No.202547096550 A
(19) INDIA
(22) Date of filing of Application :07/10/2025
(43) Publication Date : 07/11/2025

(54) Title of the invention : REDUCED TRAINING FOR MAIN BAND CHIP MODULE INTERCONNECTION CLOCK LINES

(51) International classification :G06F 13/42
(31) Priority Document No :18/329462
(32) Priority Date :05/06/2023
(33) Name of priority country :U.S.A.
(86) International Application No :PCT/US2024/023800
Filing Date :10/04/2024
(87) International Publication No :WO 2024/253752
(61) Patent of Addition to Application Number :NA
Filing Date :NA
(62) Divisional to Application Number :NA
Filing Date :NA

(71)**Name of Applicant :**
1)QUALCOMM INCORPORATED
Address of Applicant :ATTN: International IP Administration 5775 Morehouse Drive San Diego, California 92121-1714 U.S.A.
(72)**Name of Inventor :**
1)GODAVARTHI, Lekhya Pavani
2)DODDI, Ravindranath
3)RAMIREDDY, Harinatha Reddy
4)HAIDER, Afreen
5)V, Umamaheshwaran

(57) Abstract :
Aspects relate to reduced training for main band chip module interconnection clock lines. In one example a method includes sending iterations of a first training pattern from a module of a first die to a module partner of a second die on a first main band clock line of a die-to-die connection, the die-to-die connection including a sideband, a main band comprising the first main band clock line, and at least one data line supported by at least the first main band clock line. An automatic result is received from the module partner through the sideband prior to completion of the iterations of the first training pattern, the automatic result indicating successfully receiving the training pattern. Data is communicated with the module partner through the main band using at least the first main band clock line in response to receiving the automatic result.

No. of Pages : 32 No. of Claims : 23

(12) PATENT APPLICATION PUBLICATION
(21) Application No.202547096551 A
(19) INDIA
(22) Date of filing of Application :07/10/2025
(43) Publication Date : 07/11/2025

(54) Title of the invention : FLY BITLINE DESIGN FOR PSEUDO TRIPLE PORT MEMORY

(51) International classification	:H01L 27/02, G11C 7/10, G11C 11/412, H10B 10/00
(31) Priority Document No	:18/318599
(32) Priority Date	:16/05/2023
(33) Name of priority country	:U.S.A.
(86) International Application No	:PCT/US2024/025006
Filing Date	:17/04/2024
(87) International Publication No	:WO 2024/238077
(61) Patent of Addition to Application Number	:NA
Filing Date	:NA
(62) Divisional to Application Number	:NA
Filing Date	:NA

(71)**Name of Applicant :**
1)QUALCOMM INCORPORATED
Address of Applicant :Attn: International IP Administration 5775 Morehouse Drive San Diego, California 92121-1714 U.S.A.
(72)**Name of Inventor :**
1)SHARMA, Sunil
2)PALLERLA, Arun Babu
3)SON, Sung

(57) Abstract :
A memory includes a bitcell on a substrate, having a bitcell width and a bitcell height and a first access transistor and a second access transistor. The memory includes a first metal layer patterned to form a first pair of wordlines, including a first wordline coupled to a gate of the first access transistor and a second wordline coupled to a gate of the second access transistor. The memory includes a second metal layer patterned to form a pair of second metal layer islands. The pair of second metal layer islands include a first island coupled to the first wordline and a second island coupled to the second wordline. The memory includes a third metal layer patterned to form a pair of third metal layer interconnects, including a first interconnect coupled to the first island and a second interconnect coupled to the second island.

No. of Pages : 30 No. of Claims : 20

(12) PATENT APPLICATION PUBLICATION
(21) Application No.202547096552 A
(19) INDIA
(22) Date of filing of Application :07/10/2025
(43) Publication Date : 07/11/2025

(54) Title of the invention : FLOATING-POINT MULTIPLY-ACCUMULATE UNIT FACILITATING VARIABLE DATA PRECISIONS

(51) International classification	:G06F 7/544, G06F 7/487, G06F 7/485, G06F 5/01
(31) Priority Document No	:18/362529
(32) Priority Date	:31/07/2023
(33) Name of priority country	:U.S.A.
(86) International Application No	:PCT/US2023/083558
Filing Date	:12/12/2023
(87) International Publication No	:WO 2025/029312
(61) Patent of Addition to Application Number	:NA
Filing Date	:NA
(62) Divisional to Application Number	:NA
Filing Date	:NA

(71)**Name of Applicant :**
1)INTEL CORPORATION
Address of Applicant :2200 Mission College Boulevard Santa Clara, California 95054 U.S.A.
(72)**Name of Inventor :**
1)ANDERS, Mark A.
2)RAHA, Arnab
3)AGARWAL, Amit
4)HSU, Steven
5)MATHAIKUTTY, Deepak Abraham
6)KRISHNAMURTHY, Ram K.
7)POWER, Martin

(57) Abstract :
A fused dot-product multiply-accumulate (MAC) circuit may support variable precisions of floating-point data elements to perform computations (e.g., MAC operations) in deep learning operations. An operation mode of the circuit may be selected based on the precision of an input element. The operation mode may be a FP16 mode or a FP8 mode. In the FP8 mode, product exponents may be computed based on exponents of floating-point input elements. A maximum exponent may be selected from the one or more product exponents. A global maximum exponent may be selected from a plurality of maximum exponents. A product mantissa may be computed and aligned with another product mantissa based on a difference between the global maximum exponent and a corresponding maximum exponent. An adder tree may accumulate the aligned product mantissas and compute a partial sum mantissa. The partial sum mantissa may be normalized using the global maximum exponent.

No. of Pages : 53 No. of Claims : 25

(12) PATENT APPLICATION PUBLICATION
(21) Application No.202547096554 A
(19) INDIA
(22) Date of filing of Application :07/10/2025
(43) Publication Date : 07/11/2025

(54) Title of the invention : SYNTHETIC PATHWAY ACTIVATORS

(51) International classification	:C12N 15/62, C07K 14/71, C07K 14/715, C07K 14/705
(31) Priority Document No	:63/489842
(32) Priority Date	:13/03/2023
(33) Name of priority country	:U.S.A.
(86) International Application No	:PCT/US2024/019690
Filing Date	:13/03/2024
(87) International Publication No	:WO 2024/192100
(61) Patent of Addition to Application Number	:NA
Filing Date	:NA
(62) Divisional to Application Number	:NA
Filing Date	:NA

(71)**Name of Applicant :**
1)ARSENAL BIOSCIENCES, INC.
Address of Applicant :329 Oyster Point Blvd South San Francisco, California 94080 U.S.A.
(72)**Name of Inventor :**
1)GRAY-RUPP, Levi
2)GARDNER, Thomas
3)YAO, Anzhi

(57) Abstract :
Provided herein are novel synthetic pathway activators comprising multimerization regions, transmembrane domains, and intracellular signaling domains.

No. of Pages : 101 No. of Claims : 40

(12) PATENT APPLICATION PUBLICATION
(21) Application No.202547096555 A
(19) INDIA
(22) Date of filing of Application :07/10/2025
(43) Publication Date : 07/11/2025

(54) Title of the invention : DECODING METHOD, ENCODING METHOD, DECODING DEVICE, AND ENCODING DEVICE

(51) International classification :G06T 9/00
(31) Priority Document No :63/458490
(32) Priority Date :11/04/2023
(33) Name of priority country :U.S.A.
(86) International Application No :PCT/JP2024/008878
Filing Date :07/03/2024
(87) International Publication No :WO 2024/214447
(61) Patent of Addition to Application Number :NA
Filing Date :NA
(62) Divisional to Application Number :NA
Filing Date :NA

(71)**Name of Applicant :**
1)PANASONIC INTELLECTUAL PROPERTY CORPORATION OF AMERICA
Address of Applicant :2050 W 190th Street, Suite 450, Torrance, California 90504 U.S.A.
(72)**Name of Inventor :**
1)ITO, Atsushi

(57) Abstract :
This decoding method comprises: receiving a bitstream including position information indicating a plurality of nodes constituting an octree structure, and first control information indicating whether or not a first surface of a first node included in the plurality of nodes has a first face vertex provided other than a plurality of first sides of the first surface (S301); and generating or not generating the first face vertex on the first surface according to the first control information (S302). Each of the plurality of nodes is a unit including a plurality of three-dimensional points. The first node includes a first centroid vertex and a plurality of first edge vertices that are used in a trisoup system. The first face vertex, the first centroid vertex, and the plurality of first edge vertices define a triangle in which the three-dimensional points in the first node are disposed. The first control information is provided with respect to a surface of the first node that satisfies a predetermined condition.

No. of Pages : 52 No. of Claims : 12

(12) PATENT APPLICATION PUBLICATION
(21) Application No.202547096560 A
(19) INDIA
(22) Date of filing of Application :07/10/2025
(43) Publication Date : 07/11/2025

(54) Title of the invention : ENHANCED DIAZOTROPHIC MICROORGANISMS FOR USE IN AGRICULTURE

(51) International classification	:A01N 25/02, A01N 25/08, A01N 25/22, A01N 63/25, A01P 21/00
(31) Priority Document No	:63/489771
(32) Priority Date	:12/03/2023
(33) Name of priority country	:U.S.A.
(86) International Application No	:PCT/US2024/019573
Filing Date	:12/03/2024
(87) International Publication No	:WO 2024/192029
(61) Patent of Addition to Application Number	:NA
Filing Date	:NA
(62) Divisional to Application Number	:NA
Filing Date	:NA

(71)**Name of Applicant :**
1)BIOCONSORTIA, INC.
Address of Applicant :279 Cousteau Place Suite 100 Davis, California 95618 U.S.A.
(72)**Name of Inventor :**
1)WILLIAMS, Thomas
2)MALIN, John
3)ZHU, Hong
4)ALFORD, Betsy
5)REIMCHE, Courtney
6)CURTIS, Damian

(57) Abstract :
The disclosure relates to genetically modified microorganisms, for the improvement of phenotypes of plants, for example nitrogen availability for leguminous plants. Included are novel strains of the microorganisms, microbial consortia, and agricultural compositions comprising the same. Furthermore, the disclosure teaches methods of utilizing the described microorganisms, microbial consortia, and agricultural compositions comprising the same, in methods for imparting beneficial properties to target plant species. In particular aspects, the disclosure provides methods of increasing desirable plant traits in agronomically important species, for example nitrogen fixation, utilization, regulation, uptake, acquisition, tolerance, and/or processing in plants.

No. of Pages : 105 No. of Claims : 34

(12) PATENT APPLICATION PUBLICATION
(21) Application No.202547096561 A
(19) INDIA
(22) Date of filing of Application :07/10/2025
(43) Publication Date : 07/11/2025

(54) Title of the invention : LAMP HOUSING BRAZE IMPROVEMENT FOR SEMICONDUCTOR RAPID THERMAL PROCESSING (RTP) CHAMBER

(51) International classification	:H01L 21/67, H01L 21/687
(31) Priority Document No	:63/451465
(32) Priority Date	:10/03/2023
(33) Name of priority country	:U.S.A.
(86) International Application No	:PCT/US2024/019045
Filing Date	:08/03/2024
(87) International Publication No	:WO 2024/191787
(61) Patent of Addition to Application Number	:NA
Filing Date	:NA
(62) Divisional to Application Number	:NA
Filing Date	:NA

(71)**Name of Applicant :**
1)APPLIED MATERIALS, INC.
Address of Applicant :3050 Bowers Avenue Santa Clara, California 95054 U.S.A.
(72)**Name of Inventor :**
1)YANG, Yao-Hung
2)GADGIL, Shantanu Rajiv
3)RAO, Kaushik
4)LE, Ngoc
5)OLSON, Jeffrey Donald

(57) Abstract :
Embodiments of lamp housings for a process chamber are provided herein. In some embodiments, a lamp housing for a process chamber includes: a first plate having a plurality of first openings; a copper plate having a plurality of second openings; a plurality of tubes brazed via a braze alloy to the first plate at first ends of the plurality of tubes and brazed to the copper plate via the braze alloy at second ends of the plurality of tubes, wherein the plurality of tubes have central openings that are aligned with the plurality of first openings and the plurality of second openings, and wherein the braze alloy comprises a nickel containing alloy or a copper containing alloy, wherein the copper containing alloy does not include gold; and an annular jacket circumscribing the plurality of tubes and brazed to the first plate via the braze alloy.

No. of Pages : 13 No. of Claims : 20

(12) PATENT APPLICATION PUBLICATION
(21) Application No.202547096568 A
(19) INDIA
(22) Date of filing of Application :07/10/2025
(43) Publication Date : 07/11/2025

(54) Title of the invention : AXIAL FLOW FAN

(51) International classification :F04D 29/38
(31) Priority Document No :2023-044237
(32) Priority Date :20/03/2023
(33) Name of priority country :Japan
(86) International Application No :PCT/JP2024/010669
Filing Date :19/03/2024
(87) International Publication No :WO 2024/195782
(61) Patent of Addition to Application Number :NA
Filing Date :NA
(62) Divisional to Application Number :NA
Filing Date :NA

(71)**Name of Applicant :**
1)USUI CO., LTD.
Address of Applicant :131-2 Nagasawa, Shimizu-cho, Sunto-gun, Shizuoka 4118610 Japan
(72)**Name of Inventor :**
1)YAMAMOTO Shinichiro
2)IIDA Yoshinobu

(57) Abstract :
[Problem] To provide an axial flow fan capable of increasing the air volume between fan blades and improving horsepower efficiency by improving the shape of fan blades in a structure in which the flow of air and wind is not vertically received air between the fan blades. [Solution] Provided is an axial flow fan including a plurality of fan blades radially extending on the outer periphery of a hub. The axial flow fan is characterized by being configured such that: a taper boss part of a root section of a blade body on a side opposing the back surface of an adjacent fan blade is formed as a wide surface inclined in the direction of rotation of the fan; and a portion curved to a windward side is provided at a tip part on the leeward side of the fan blade.

No. of Pages : 6 No. of Claims : 2

(12) PATENT APPLICATION PUBLICATION
(21) Application No.202547096572 A
(19) INDIA
(22) Date of filing of Application :07/10/2025
(43) Publication Date : 07/11/2025

(54) Title of the invention : DISPLAY SUBSTRATE AND DISPLAY APPARATUS

(51) International classification	:G02F 1/1343, G02F 1/1362
(31) Priority Document No	:202310748299.8
(32) Priority Date	:21/06/2023
(33) Name of priority country	:China
(86) International Application No	:PCT/CN2024/093114
Filing Date	:14/05/2024
(87) International Publication No	:WO 2024/260157
(61) Patent of Addition to Application Number	:NA
Filing Date	:NA
(62) Divisional to Application Number	:NA
Filing Date	:NA

(71)**Name of Applicant :**
1)BOE TECHNOLOGY GROUP CO., LTD.
Address of Applicant :No. 10 Jiuxianqiao Rd. Chaoyang District, Beijing 100015 China
2)BEIJING BOE DISPLAY TECHNOLOGY CO., LTD.
(72)**Name of Inventor :**
1)ZHAO, Chongyang
2)CHEN, Dongchuan
3)MIAO, Yingmeng
4)ZHAO, Xinxin

(57) Abstract :
Provided are a display substrate and a display apparatus. The display substrate comprises a substrate (10), and a plurality of sub-pixels (20) and a plurality of power source signal lines (30), which are located on the substrate (10). The plurality of sub-pixels (20) are arranged in a plurality of rows and columns, the size of each sub-pixel (20) in a row direction is a first size (d1), the size of each sub-pixel (20) in a column direction is a second size (d2), and the first size (d1) is greater than the second size (d2); and each sub-pixel (20) comprises a first electrode (21) and a second electrode (22), which are arranged opposite each other, and liquid crystal molecules, which are located between the first electrode (21) and the second electrode (22). The plurality of power source signal lines (30) extend in the column direction (Y); and two adjacent first electrodes (21) in the row direction (X) are connected by means of a power source signal line (30), and two adjacent first electrodes (21) in the column direction (Y) are connected by means of a power source signal line (30). The display apparatus comprises a display substrate.

No. of Pages : 22 No. of Claims : 23

(12) PATENT APPLICATION PUBLICATION
(21) Application No.202547096573 A
(19) INDIA
(22) Date of filing of Application :07/10/2025
(43) Publication Date : 07/11/2025

(54) Title of the invention : METHOD AND APPARATUS FOR WIRELESS COMMUNICATION

(51) International classification :H04W 56/00
(31) Priority Document No :202310224812.3
(32) Priority Date :10/03/2023
(33) Name of priority country :China
(86) International Application No :PCT/CN2023/082088
Filing Date :17/03/2023
(87) International Publication No :WO 2024/187486
(61) Patent of Addition to Application Number :NA
Filing Date :NA
(62) Divisional to Application Number :NA
Filing Date :NA

(71)**Name of Applicant :**
1)QUECTEL WIRELESS SOLUTIONS CO., LTD.
Address of Applicant :Room 513, 5th Floor, No. 6, Lane 205, Gaoji Road, Sijing Town Songjiang District, Shanghai 201601 China
(72)**Name of Inventor :**
1)LYU, Ling
2)ZHAO, Zheng
3)YANG, Zhongzhi

(57) Abstract :
Provided in the present application are a method and apparatus for wireless communication, so as to solve the problem of an NTN and other communication systems with a large propagation delay and high device mobility being unable to meet phase continuity requirements due to a phase offset when performing channel estimation on the basis of a DMRS bundling. The method comprises: a terminal device determining a plurality of frequency compensation segments within a first time period on the basis of first information, wherein the first information is related to a DMRS bundling which is used for joint channel estimation, and the first time period comprises a time-domain window corresponding to at least one DMRS bundling; and the terminal device performing pre-compensation, according to the plurality of frequency compensation segments, on an uplink channel corresponding to the first time period.

No. of Pages : 40 No. of Claims : 33

(12) PATENT APPLICATION PUBLICATION
(21) Application No.202547096602 A
(19) INDIA
(22) Date of filing of Application :07/10/2025
(43) Publication Date : 07/11/2025

(54) Title of the invention : MEDIA COMMUNICATIONS FOR WEARABLE DEVICES

(51) International classification	:H04L 65/1069, H04L 65/1094, H04L 65/61
(31) Priority Document No	:18/327829
(32) Priority Date	:01/06/2023
(33) Name of priority country	:U.S.A.
(86) International Application No	:PCT/US2024/029227
Filing Date	:14/05/2024
(87) International Publication No	:WO 2024/249071
(61) Patent of Addition to Application Number	:NA
Filing Date	:NA
(62) Divisional to Application Number	:NA
Filing Date	:NA

(71)**Name of Applicant :**
1)QUALCOMM INCORPORATED
Address of Applicant :ATTN: International IP Administration 5775 Morehouse Drive San Diego, California 92121-1714 U.S.A.
(72)**Name of Inventor :**
1)MA, Liangping
2)LEUNG, Nikolai Konrad
3)KEROFSKY, Louis Joseph

(57) Abstract :
Methods, systems, and devices for wireless communications are described. For example, the described techniques provide for a first wearable device and a second wearable device to initiate media sessions with a user equipment (UE) and an end device. The wearable devices may each initiate a session flow by transmitting session description protocol (SDP) offer messages to the end device. In some examples, the wearable devices may transmit capability information to the UE, and the UE may transmit an SDP offer message to the end device. The end device may begin the session after receiving the one or more SDP offer messages by transmitting one or more SDP answer messages. The wearable devices may each transmit information about a user of the wearable devices. The end device may generate streams of media content, and the UE may cast the streams of media content to the wearable devices.

No. of Pages : 69 No. of Claims : 30

(12) PATENT APPLICATION PUBLICATION
(21) Application No.202547096644 A
(19) INDIA
(22) Date of filing of Application :07/10/2025
(43) Publication Date : 07/11/2025

(54) Title of the invention : CRYPTOGRAPHIC SERVICE PROVISION

(51) International classification	:H04L 9/08, H04L 9/40
(31) Priority Document No	:23164771.0
(32) Priority Date	:28/03/2023
(33) Name of priority country	:EPO
(86) International Application No	:PCT/US2024/014703
Filing Date	:07/02/2024
(87) International Publication No	:WO 2024/205743
(61) Patent of Addition to Application Number	:NA
Filing Date	:NA
(62) Divisional to Application Number	:NA
Filing Date	:NA

(71)**Name of Applicant :**
1)MASTERCARD INTERNATIONAL INCORPORATED
Address of Applicant :2000 Purchase Street Purchase, NY 10577 U.S.A.
(72)**Name of Inventor :**
1)COLLINGE, Mehdi

(57) Abstract :
A method of providing a secure service at a computing node for a requesting party external to the computing node is described. This computing node is one of a plurality of computing nodes in a distributed computing system adapted to provide the secure service. The method comprises the following steps carried out at the computing node. A service request is received from a requesting party, wherein the service request comprises a request to generate a credential. The credential is then generated using a cryptographic key and an instance counter, wherein the cryptographic key is determined from a currently active key list of cryptographic keys for use by the computing node, wherein key lists are rotated to provide a new currently active key list at a predetermined rotation frequency, and wherein the instance counter is determined by a number of instances of performing the service within a predetermined time window. The credential is provided such that a key list reference and an instance counter value can be determined from the credential without decryption. However, the credential further comprises a key list enhancement, such that the key list enhancement is used to prevent clash between credentials having a common key list reference and a common instance counter value. A complementary method of validating such a credential is also described, together with computing apparatus adapted to perform such methods.

No. of Pages : 36 No. of Claims : 11

(12) PATENT APPLICATION PUBLICATION
(21) Application No.202547096709 A
(19) INDIA
(22) Date of filing of Application :07/10/2025
(43) Publication Date : 07/11/2025

(54) Title of the invention : DEPLOYMENT CONTROL OVER CLOUD RESOURCES

(51) International classification	:G06F 9/50, H04L 9/40, G06F 8/60
(31) Priority Document No	:63/462875
(32) Priority Date	:28/04/2023
(33) Name of priority country	:U.S.A.
(86) International Application No	:PCT/US2024/026695
Filing Date	:27/04/2024
(87) International Publication No	:WO 2024/227116
(61) Patent of Addition to Application Number	:NA
Filing Date	:NA
(62) Divisional to Application Number	:NA
Filing Date	:NA

(71)**Name of Applicant :**
1)ORACLE INTERNATIONAL CORPORATION
Address of Applicant :500 Oracle Parkway, M/S 50P7 Redwood Shores, California 94065 U.S.A.
(72)**Name of Inventor :**
1)BOLLA, Jason
2)VOGEL, Daniel M.

(57) Abstract :
Techniques for controlling resource deployments in a cloud partition of a cloud environment are disclosed. A cloud service provider (CSP) operates the cloud environment where its customers can specify constraints on deployments to their respective partitions (i.e., regions or realms). A partition-specific deployment constraint is a rule that constrains the changes/updates that can be made to one or more specific partitions. A partition-specific deployment constraint applies to at least one partition but may apply to multiple partitions. For example, a partition-specific deployment constraint may apply to one or more regions in a realm. A partition-specific deployment constraint is evaluated at deployment time using the most recent state, or a curated subset thereof, for at least one specific partition. A global deployment orchestrator conditions a deployment, at least in part, on if the deployment satisfies the partition-specific constraint(s) in the target partition.

No. of Pages : 46 No. of Claims : 21

(12) PATENT APPLICATION PUBLICATION
(21) Application No.202547096717 A
(19) INDIA
(22) Date of filing of Application :07/10/2025
(43) Publication Date : 07/11/2025

(54) Title of the invention : SOUNDING REFERENCE SIGNAL (SRS) TIMING AND FREQUENCY ADJUSTMENT FOR NON-TERRESTRIAL NETWORK (NTN) POSITIONING

(51) International classification	:H04W 56/00, H04L 5/00, H04W 74/0833
(31) Priority Document No	:20230100424
(32) Priority Date	:26/05/2023
(33) Name of priority country	:Greece
(86) International Application No	:PCT/US2024/022234
Filing Date	:29/03/2024
(87) International Publication No	:WO 2024/248930
(61) Patent of Addition to Application Number	:NA
Filing Date	:NA
(62) Divisional to Application Number	:NA
Filing Date	:NA

(71)**Name of Applicant :**
1)QUALCOMM INCORPORATED
Address of Applicant :ATTN: International IP Administration 5775 Morehouse Drive San Diego, California 92121-1714 U.S.A.
(72)**Name of Inventor :**
1)SAHA, Chiranjib
2)MANOLAKOS, Alexandros
3)RICO ALVARINO, Alberto
4)LIU, Le

(57) Abstract :
Disclosed are techniques for wireless communication. In an aspect, a UE may receive a timing advance sub-grouping (TASG) configuration indicating multiple TASG identifiers and associated time windows. The UE may receive a sounding reference signal (SRS) configuration indicating multiple SRS resources within a same component carrier and associated with the TASG identifiers. The UE may transmit a first portion of the SRS resources within a first time window associated with a first TASG identifier of the TASG identifiers based on a first timing advance (TA) value. The UE may transmit a second portion of the SRS resources within a second time window associated with a second TASG identifier of the TASG identifiers based on a second TA value that is determined based on a TA adjustment value or the first TA value.

No. of Pages : 74 No. of Claims : 30

(12) PATENT APPLICATION PUBLICATION
(21) Application No.202547097419 A
(19) INDIA
(22) Date of filing of Application :09/10/2025
(43) Publication Date : 07/11/2025

(54) Title of the invention : CARRIER AND/OR FORK BOARD WITH WEIGHT MEASUREMENT FOR A LIFTING DEVICE, LIFTING DEVICE PROVIDED THEREWITH AND METHOD THEREFOR

(51) International classification	:B66C 13/16, B66F 9/12, B66F 9/24
(31) Priority Document No	:2034337
(32) Priority Date	:14/03/2023
(33) Name of priority country	:Netherlands
(86) International Application No	:PCT/NL2024/050128
Filing Date	:14/03/2024
(87) International Publication No	:WO 2024/191301
(61) Patent of Addition to Application Number	:NA
Filing Date	:NA
(62) Divisional to Application Number	:NA
Filing Date	:NA

(71)**Name of Applicant :**
1)MEIJER HOLDING B.V.
Address of Applicant :Oudebildtdijk 894 NL-9079 NG Sint Jacobiparochie Netherlands
(72)**Name of Inventor :**
1)MEIJER, Hendrik

(57) Abstract :
The invention relates to a carrier for loads, such as a fork for a lifting device, and a fork board and/or lifting device provided with such a carrier and associated method. The carrier according to the invention comprises: - coupling means configured to couple the carrier to the lifting device; - a carrier part for carrying loads, - an optical fiber cable arranged in or on the carrier part; and - an optical fiber controller which is operatively connectable to the optical fiber cable and is configured to perform a measurement with the optical fiber cable, such that the weight of the load or loads on the carrier can be determined.

No. of Pages : 14 No. of Claims : 21

(12) PATENT APPLICATION PUBLICATION
(21) Application No.202431034808 A
(19) INDIA
(22) Date of filing of Application :02/05/2024
(43) Publication Date : 07/11/2025

(54) Title of the invention : ADVANCED AI-DRIVEN SEMI-SUBMERSIBLE SENSING SYSTEM FOR DYNAMIC WATER BODY ANALYSIS

(51) International classification	:B63B0035440000, B63B0001100000, C02F0001000000, G01N0033180000, G16H0040630000	(71)**Name of Applicant :**
(31) Priority Document No	:NA	**1)JANA, SUMAN**
(32) Priority Date	:NA	Address of Applicant :ENERGY DEPARTMENT NIL PRITHIBI TECHNOLOGY PRIVATE LIMITED RABINDRA NAGAR, LASKARPUR, KOLKATA – 700 153 WEST BENGAL, INDIA KOLKATA West Bengal India
(33) Name of priority country	:NA	**2)BISWAS, PABITRA KUMAR**
(86) International Application No	:NA	(72)**Name of Inventor :**
Filing Date	:NA	**1)JANA, SUMAN**
(87) International Publication No	: NA	**2)BISWAS, PABITRA KUMAR**
(61) Patent of Addition to Application Number	:NA	**3)PATTANAYAK, SATYAJIT**
Filing Date	:NA	**4)CHANDRASEKHAR, RAJALAKSHMI**
(62) Divisional to Application Number	:NA	**5)GHOSH, PRADIPTO**
Filing Date	:NA	**6)BANIK, ARKA**
		7)MAJUMDER, AVISHEK
		8)SHARMA, YOGESH KUMAR

(57) Abstract :
ABSTRACT ADVANCED AI-DRIVEN SEMI-SUBMERSIBLE SENSING SYSTEM FOR DYNAMIC WATER BODY ANALYSIS The present invention provides an improved AI-Driven semisubmersible sensing system for dynamic water body analysis having a self-powered and self-propelling water proof sensing unit (100) capable of seamless data transmission and reception (101). The unit (100) has an upper portion (103) and a lower portion. The upper portion (103) houses at least one wind sensor (102) and at least one specialized sensor (111) for gathering data on underwater conditions. The lower portion houses specialized PH and TDS sensors and cooling facility for the unit (100). The unit (100) is operatively connected to a remote server equipped with AI-modules for facilitating creation of detailed 3D mapping of water bodies. A method for dynamic water body analysis applying the system is also disclosed. FIG. 1

No. of Pages : 20 No. of Claims : 10

(12) PATENT APPLICATION PUBLICATION
(21) Application No.202431034963 A
(19) INDIA
(22) Date of filing of Application :02/05/2024
(43) Publication Date : 07/11/2025

(54) Title of the invention : INCORPORATING ANTHERAEA MYLITTA PUPAE MEAL IN FISH FEED, RESTRICTING FISH MEAL, METHODS THEREOF

(51) International classification	:A23K50/80, A23K20/158, A23K20/174, A23K20/20, A23K10/30
(31) Priority Document No	:NA
(32) Priority Date	:NA
(33) Name of priority country	:NA
(86) International Application No	:NA
Filing Date	:NA
(87) International Publication No	: NA
(61) Patent of Addition to Application Number	:NA
Filing Date	:NA
(62) Divisional to Application Number	:NA
Filing Date	:NA

(71)**Name of Applicant :**
1)INDIAN COUNCIL OF AGRICULTURAL RESEARCH
Address of Applicant :ICAR - Central Inland Fisheries Research Institute Barrackpore Kolkata West Bengal India Kolkata West Bengal India
2)CENTRAL SILK BOARD
(72)**Name of Inventor :**
1)MD ABUL HASSAN
2)BASANTA KUMAR DAS
3)DHARMENDRA KUMAR MEENA
4)RAHUL DAS
5)KARMABEER JENA
6)SUSMITA DAS
7)JITENDRA SINGH
8)K SATHYANARAYANA
9)TANMOY KR MANNA
10)RANI SADHUKHAN

(57) Abstract :
Abstract Title :INCORPORATING ANTHERAEA MYLITTA PUPAE MEAL IN FISH FEED, RESTRICTING FISH MEAL, METHODS THEREOF A floating fish feed comprising Antheraea mylitta pupae meal as an alternative protein source wherein the quantity of pupae meal and its contribution of lipid in the final feed mixture and the method of pre-processing of pupae meal to reduce the lipid content to an optimum level result in the manufacture of extruded floating fish feed. Crude lipid in Antheraea mylitta pupae meal reduced from15% to 4.39% is essential to maintain optimum fat level for production of extrusion pellet. The processed pupae meal allows inclusion of pupae meal to a maximum of 22% in final formulation having feed stability (76-90%) and floatability (96-100%) for superior growth and nutrient utilization in fishes. The developed feed showed superior nutrient utilization in terms of feed conversion ratio from 1.35 to 1.64 in P. hypophthalmus and 1.68 to 2.0 in O. niloticus.

No. of Pages : 59 No. of Claims : 21

(12) PATENT APPLICATION PUBLICATION
(21) Application No.202431035080 A
(19) INDIA
(22) Date of filing of Application :03/05/2024
(43) Publication Date : 07/11/2025

(54) Title of the invention : FREQUENCY IDENTIFICATION DEVICE INTEGRATED IN AN ELECTRICAL FIXATION SYSTEM AND METHOD THEREOF

(51) International classification	:G01R23/00, H02J9/06
(31) Priority Document No	:NA
(32) Priority Date	:NA
(33) Name of priority country	:NA
(86) International Application No	:NA
Filing Date	:NA
(87) International Publication No	: NA
(61) Patent of Addition to Application Number	:NA
Filing Date	:NA
(62) Divisional to Application Number	:NA
Filing Date	:NA

(71)**Name of Applicant :**
1)SCHNEIDER ELECTRIC INDUSTRIES SAS
Address of Applicant :35, rue Joseph Monier, F-92500 Rueil Malmaison, France France
(72)**Name of Inventor :**
1)Deekshith NARAYANA
2)Gurveen Singh SACHDEVA

(57) Abstract :
The present invention discloses a frequency identification device (9) integrated in an electrical fixation system and method thereof. The frequency identification device (9) includes a PCBA (11) connected to a rocker assembly (12) using an isolation plate (13). The PCBA (11) includes an AC-DC convertor (18) that receives an AC voltage input from a power source, and converts the AC voltage into a DC voltage. The PCBA (11) includes optocouplers (19) that senses a mainline frequency range from the power source and a baseline frequency range of the electrical fixation system, and a microcontroller (20) that identifies a type of the power source to the electrical fixation system based on the DC voltage, the mainline frequency range and the baseline frequency range, and generates a led control signal. Further, a light guide (14) receives the led control signal and enable the LED indicator (16) on the rocker assembly (12). FIG. 2

No. of Pages : 37 No. of Claims : 15

(12) PATENT APPLICATION PUBLICATION
(21) Application No.202431035258 A
(19) INDIA
(22) Date of filing of Application :03/05/2024
(43) Publication Date : 07/11/2025

(54) Title of the invention : Formulation of a plant based organic herbal bio-weedicide

(51) International classification	:A61K0036810000, C12N0015820000, C12N0009880000, A01N0063300000, A01H0005080000	(71)**Name of Applicant :** **1)UNIVERSITY OF ENGINEERING AND MANAGEMENT** Address of Applicant :UNIVERSITY OF ENGINEERING AND MANAGEMENT, UNIVERSITY AREA, PLOT NO. III – B/5, STREET NUMBER 03, ACTION AREA- III, NEWTOWN, KOLKATA, WEST BENGAL. KOLKATA West Bengal India
(31) Priority Document No	:NA	(72)**Name of Inventor :**
(32) Priority Date	:NA	**1)Dr. Pratik Talukder**
(33) Name of priority country	:NA	**2)Ms. Baishakhi Sinha**
(86) International Application No	:NA	**3)Ms. Meghna Mishra**
Filing Date	:NA	**4)Ms. Arundhuti Mukherjee**
(87) International Publication No	: NA	**5)Ms. Suravi Dutta**
(61) Patent of Addition to Application Number	:NA	
Filing Date	:NA	
(62) Divisional to Application Number	:NA	
Filing Date	:NA	

(57) Abstract :
With increase in world population and sensitivity of plants to various environmental stressors which results in reduced plant vigor, there emerges a pressing need for effective crop management. To ensure consistent yield of high quality and nutritional crops, sufficient measures and precautions must be undertaken to combat the greatest peril of the plant kingdom: weed infestation. Solanum melongena, a vegetable belonging to the Solanaceae family is frequently cultivated in the tropical and subtropical areas particularly in Asia (India, China, Bangladesh and the southeastern regions) and collaterally in the Middle East and in the vicinity of the Mediterranean. However the cultivation rates of Solanum melongena has significantly been reduced due to weed activity. Two most common weeds known to affect Solanum melongena are Lantana camara and Parthenium hysterophorus. Lantana camara, an exotic weed from the Verbenaceae family, introduced from America, has an exceptional rate of fanning out to neighboring plants thereby affecting the latter's metabolite production. On the other hand, Parthenium hysterophorus belonging to the Asteraceae family also native to America, operates similarly to minimize the endurance of plants by reducing secondary metabolites production. For its notorious effects, in India alone, Parthenium hysterophorus is infamously called the 'Terror of Bengal'. Amensalism is the phenomenon which causes this reduction. In addition, it inhibits the growth of plant seedlings thereby resulting in subsequent reduction in yield. Although Solanum melongena exhibits sensitivity to the aforementioned weed activities, the experimental results obtained from this study has disclosed the plant's ability to endure and survive the degrading effects of weed allelochemicals. This paper poignantly shows the role played by Chlorogenic Acid (CGA) in combating the weed infestation of Solanum melongena. CGA, a notable polyphenol, is renowned for its role in plant defense mechanisms as it has antioxidant activity and also functions as anti-lipidemic, anti-diabetic and anti-inflammatory agent. The synthesis of CGA by the Phenylpropanoid Pathway is regulated by the expression of Hydroxycinnamoyl CoA quinate transferase (HQT) gene. To further confirm the CGA levels of affected sample plant Solanum melongena, the expression of Phenyl Alanine Lyase (PAL) gene, the first enzyme of the Phenylpropanoid Pathway, was also analyzed in this study. Economic drawbacks of weed infestation are a major issue of agricultural processes as it leads to reduced growth and vitality of crops. The results obtained from this study paves the way for a cost-effective development of efficient weedicide with the goal of maintaining superficial quality of plants thus adding a new dimension to the aegis of the crop management industry.

No. of Pages : 15 No. of Claims : 10

(12) PATENT APPLICATION PUBLICATION
(21) Application No.202431035260 A
(19) INDIA
(22) Date of filing of Application :03/05/2024
(43) Publication Date : 07/11/2025

(54) Title of the invention : SkyNet Weather: A Precision Weather Forecasting Framework for Flying Ad-Hoc Networks

(51) International classification	:H04W0072040000, G01W0001100000, H04W0084180000, H04L0067120000, B64C0039020000	(71)**Name of Applicant :** **1)INSTITUTE OF ENGINEERING & MANAGEMENT** Address of Applicant :INSTITUTE OF ENGINEERING & MANAGEMENT, SALT LAKE ELECTRONICS COMPLEX, SECTOR-V, SALT LAKE, KOLKATA. KOLKATA West Bengal India
(31) Priority Document No	:NA	(72)**Name of Inventor :**
(32) Priority Date	:NA	**1)Madhumita Pal**
(33) Name of priority country	:NA	**2)Ayan Kumar Panja**
(86) International Application No	:NA	**3)Amartya Mukherjee**
Filing Date	:NA	**4)Satyajit Chakrabarti**
(87) International Publication No	: NA	
(61) Patent of Addition to Application Number	:NA	
Filing Date	:NA	
(62) Divisional to Application Number	:NA	
Filing Date	:NA	

(57) Abstract :
The present invention discloses a FANET framework for efficient and precision weather prediction and forecasting that leverages ultra-low latency opportunistic message transfer protocol (MTP). An, edge empowered intelligent computing quasi-stationary sink nodes are employed to develop the FANET ecosystem further. Flying sensor nodes and edge computing quasi-stationary sink nodes are deployed in the target area in order to achieve optimal sensor coverage, minimizing the cost of data transmission power thus ensuring long endurance operation of drones, as well as collision avoidance. An ensemble model can be deployed in edge level for localized weather prediction. A set of opportunistic routing strategies are proposed to send the data to the main base station or ground station for further analytics.

No. of Pages : 9 No. of Claims : 6

(12) PATENT APPLICATION PUBLICATION

(21) Application No.202431035261 A

(19) INDIA

(22) Date of filing of Application :03/05/2024

(43) Publication Date : 07/11/2025

(54) Title of the invention : A Framework for simple Real-time Data Transfer and Processing

(51) International classification	:A61B0005110000, G05D0001020000, A61B0005145000, H04L0067020000, H04N0005232000	(71)**Name of Applicant :** **1)IEMA Research & Development Private Limited** Address of Applicant :Unit 601, Godrej Genesis Building, Block EP & GP, Sector- V, Salt Lake, Kolkata. KOLKATA West Bengal India
(31) Priority Document No	:NA	(72)**Name of Inventor :**
(32) Priority Date	:NA	**1)Ayan Kumar Panja**
(33) Name of priority country	:NA	**2)Amartya Mukherjee**
(86) International Application No	:NA	**3)Souvik Chatterjee**
Filing Date	:NA	**4)Satyajit Chakrabarti**
(87) International Publication No	: NA	
(61) Patent of Addition to Application Number	:NA	
Filing Date	:NA	
(62) Divisional to Application Number	:NA	
Filing Date	:NA	

(57) Abstract :

A complete system framework of sensors, broker and application layer of subscribed client has been disclosed in this work. The system combines various sensing modalities embedded in a device module. A framework for effective transfer of real-time data through the utilization of MQTT protocol has been proposed. The routed information is subscribed into a sink base station for further processing. The sensing modalities considered by the system include real time data of vibration, magnetic flux, temperature and ultrasound from respective sensors. The approach includes collecting data from these sensors, passing the data over a three layered structures framework, extracting relevant information and providing a user-friendly interface for users to interact with the system. The approach ensures the security and privacy of user data.

No. of Pages : 7 No. of Claims : 3

(12) PATENT APPLICATION PUBLICATION
(21) Application No.202431035262 A
(19) INDIA
(22) Date of filing of Application :03/05/2024
(43) Publication Date : 07/11/2025

(54) Title of the invention : Smart Video Surveillance

(51) International classification	:H04N0007180000, G08B0013196000, G06N0003080000, G06N0003040000, G06F0021560000
(31) Priority Document No	:NA
(32) Priority Date	:NA
(33) Name of priority country	:NA
(86) International Application No	:NA
Filing Date	:NA
(87) International Publication No	: NA
(61) Patent of Addition to Application Number	:NA
Filing Date	:NA
(62) Divisional to Application Number	:NA
Filing Date	:NA

(71)**Name of Applicant :**
1)INSTITUTE OF ENGINEERING & MANAGEMENT
Address of Applicant :INSTITUTE OF ENGINEERING & MANAGEMENT, SALT LAKE ELECTRONICS COMPLEX, SECTOR-V, SALT LAKE, KOLKATA. KOLKATA West Bengal India
(72)**Name of Inventor :**
1)Avijit Bose
2)Anmol Gaurav
3)Prakash Tomar
4)Dipannita Ghosh Sneha
5)Satyajit Chakrabarti

(57) Abstract :
The present invention introduces a real-time threat analysis system for surveillance cameras, utilizing advanced computer vision and deep learning techniques to detect suspicious activities, including weapon detection and pose analysis. By integrating these technologies, the system aims to provide a proactive approach to security by enabling the timely identification of potential threats. The use of deep learning and computer vision allows for the robust and adaptive recognition of unusual behaviours and potential risks in various environments. This innovation represents a significant advancement in the field of video surveillance and security, offering a comprehensive solution for the accurate and efficient detection of suspicious activities in diverse settings. The system's design and functionality seek to address the limitations of existing surveillance systems, providing a more effective and reliable means of enhancing security measures through proactive threat detection and response.

No. of Pages : 4 No. of Claims : 4

(12) PATENT APPLICATION PUBLICATION
(21) Application No.202431035283 A
(19) INDIA
(22) Date of filing of Application :03/05/2024
(43) Publication Date : 07/11/2025

(54) Title of the invention : A Rational System for Testing Resilient Modulus of Unbound Granular Materials

(51) International classification	:G01N0001280000, G11B0005660000, G01N0003080000, G01N0001360000, E01C0003000000	
(31) Priority Document No	:NA	
(32) Priority Date	:NA	
(33) Name of priority country	:NA	
(86) International Application No	:NA	
Filing Date	:NA	
(87) International Publication No	: NA	
(61) Patent of Addition to Application Number	:NA	
Filing Date	:NA	
(62) Divisional to Application Number	:NA	
Filing Date	:NA	

(71)**Name of Applicant :**
1)INDIAN INSTITUTE OF TECHNOLOGY BHUBANESWAR
Address of Applicant :Argul, Jatni, Khordha, Odisha, India Bhubaneswar Orissa India
(72)**Name of Inventor :**
1)Dr. Umesh Chandra Sahoo
2)Tanmaya Kumar Barik
3)Dr. Venugopal Arumuru

(57) Abstract :
Abstract Title: A RATIONAL SYSTEM FOR TESTING RESILIENT MODULUS OF UNBOUND GRANULAR MATERIALS Resilient Modulus of unbound granular layer is one of the major parameters in pavement design procedure. However, the use of membrane to enclose the specimen in conventional repeated load triaxial test procedure makes the compaction and sample preparation very time consuming and complex. Attempts have been made to simplify the sample preparation by using springs or rubber as confinement. But the user will not be able to regulate the confining pressure with these materials. So, this invention uses single acting pneumatic cylinder to apply confining pressure to the sample that is enclosed in a split mould. The sample diameter is 150 mm and height of 300 mm and can test aggregate sizes below 30 mm. A single acting pneumatic cylinder is used to emulate the stiffness of soil subgrade that lies beneath the granular layer. The sample is placed on a base plate mounted on the pneumatic cylinder piston rod. It replicates the effect of subgrade modulus on resilient modulus of granular layer. Figure 7

No. of Pages : 34 No. of Claims : 10

(12) PATENT APPLICATION PUBLICATION
(21) Application No.202431035317 A
(19) INDIA
(22) Date of filing of Application :03/05/2024
(43) Publication Date : 07/11/2025

(54) Title of the invention : SURGICAL MULTIPURPOSE SUPPORT DEVICE FOR 'NON-TOUCH' MANIPULATION ACTIVITY FOR IMPLANTS AND PROSTHESIS AS WELL AS DISSECTION OF TISSUE PLANES.

(51) International classification	:A61B0090000000, A61B0034200000, A61B0017000000, A61B0017420000, A61B0018000000	(71)**Name of Applicant :** **1)DR. DILIP GAHANKARI** Address of Applicant :12 Korong Street, Southport Queensland Australia 4215 Australia (72)**Name of Inventor :** **1)DR. DILIP GAHANKARI**
(31) Priority Document No	:NA	
(32) Priority Date	:NA	
(33) Name of priority country	:NA	
(86) International Application No	:NA	
Filing Date	:NA	
(87) International Publication No	: NA	
(61) Patent of Addition to Application Number	:NA	
Filing Date	:NA	
(62) Divisional to Application Number	:NA	
Filing Date	:NA	

(57) Abstract :
ABSTRACT TITLE: SURGICAL MULTIPURPOSE SUPPORT DEVICE FOR 'NON-TOUCH' MANIPULATION ACTIVITY FOR IMPLANTS AND PROSTHESIS AS WELL AS DISSECTION OF TISSUE PLANES. A surgical multi purpose support device suitable selectively for 'non-touch' manipulation activity for implants and prosthesis as well as dissection of tissue planes avoiding tissue injury in body cavities in surgical procedures and the like. The multipurpose device includes a manipulator end (3) shaped free of any sharp peripheral edges and with a blunt tip (3C) at the front adapted for entry within said body cavity and providing a carrier support for the manipulating activity including adjusting said implant or device in position with respect to any surgical region of interest as well as dissection procedures. An extended shaft (4) operatively connects the manipulator end portion for manipulate externally away from said region of interest in said cavity during surgery. The device is directed to favour non-touch surgical procedures such as to adjust the position of surgical prosthesis in implant cavity appropriate to the procedure and adjust the implant cavity to the surgical prosthesis. It would serve for more safety in surgical procedures, avoiding unwanted touch and related contaminations and complexities and can be used for various other surgical procedures such as manipulation of the breast prosthesis or adjustment of the breast cavity by "non-touch" technique as well in general surgery, urological surgery, gynaecological surgery, endoscopic assisted surgery, etc. Fig 7

No. of Pages : 24 No. of Claims : 12

(12) PATENT APPLICATION PUBLICATION
(21) Application No.202431035479 A
(19) INDIA
(22) Date of filing of Application :04/05/2024
(43) Publication Date : 07/11/2025

(54) Title of the invention : AUTOMATED WAX DISPENSING DEVICE FOR OCCLUSAL RIMS

(51) International classification	:G06F0003048830, B25G0001100000, H02K0021160000, F16B0013080000, B67D0003000000
(31) Priority Document No	:NA
(32) Priority Date	:NA
(33) Name of priority country	:NA
(86) International Application No	:NA
Filing Date	:NA
(87) International Publication No	: NA
(61) Patent of Addition to Application Number	:NA
Filing Date	:NA
(62) Divisional to Application Number	:NA
Filing Date	:NA

(71)**Name of Applicant :**
1)Siksha 'O' Anusandhan (Deemed to be University)
Address of Applicant :J-15, Khandagiri Square, Bhubaneswar-751030, Odisha, India. Bhubaneswar Orissa India
(72)**Name of Inventor :**
1)Abhijeet Satapathy
2)Dr. Rupsa Das

(57) Abstract :
An automated wax dispensing device for occlusal rims, comprises of a cylindrical shaped hollow frame 1 having a first portion and second portion developed to be held by a user in proximity to an occlusal rim 7, a handle 2 for providing grip to the user while positioning the cylindrical shaped hollow frame 1 above the occlusal rim 7, a conical shaped member 3 that is accessed by the user to fill wax granules, a triggering unit 4 pressed by the user to initiate melting of the wax granules, a heating unit 5 for generating heat and melt the wax granules, and a motorized air blower 6 to push the molten wax paste towards the opening crafted on the second portion of the cylindrical shaped hollow frame 1.

No. of Pages : 16 No. of Claims : 4

(12) PATENT APPLICATION PUBLICATION
(21) Application No.202431035480 A
(19) INDIA
(22) Date of filing of Application :04/05/2024
(43) Publication Date : 07/11/2025

(54) Title of the invention : ELECTRO-MECHANICALLY POWERED STIRRING DEVICE

(51) International classification	:H04W0076100000, A61B0090500000, B01J0019180000, B29C0065200000, G07C0009000000
(31) Priority Document No	:NA
(32) Priority Date	:NA
(33) Name of priority country	:NA
(86) International Application No	:NA
Filing Date	:NA
(87) International Publication No	: NA
(61) Patent of Addition to Application Number	:NA
Filing Date	:NA
(62) Divisional to Application Number	:NA
Filing Date	:NA

(71)**Name of Applicant :**
1)Siksha 'O' Anusandhan (Deemed to be University)
Address of Applicant :J-15, Khandagiri Square, Bhubaneswar-751030, Odisha, India. Bhubaneswar Orissa India
(72)**Name of Inventor :**
1)Tapash Ranjan Rautray
2)Subhasmita Swain

(57) Abstract :
An electro-mechanically powered stirring device, comprising a body 1 developed to be positioned on a fixed surface, a beaker 2 accessed by user to pour a mixture, a bar 3 arranged on body 1, in proximity to beaker 2 and integrated with a clamp 10 to hold beaker 2 stably on body 1, a perforated plate 4 connected with body 1 by means of a coupling, a button 5 accessed by user for activating/de-activating device, a first regulator knob 6 accessed by user for altering rotational speed of plate 4, a heating plate 7 heated up for heating mixture while being stirred to enhance mixing rate of mixture and a second regulator knob 8 accessed by user for altering temperature of heating plate 7 to regulate actuation of heating plate 7 to ensure optimum conditions for mixing of mixture as regulated by user.

No. of Pages : 14 No. of Claims : 4

(12) PATENT APPLICATION PUBLICATION
(21) Application No.202431035481 A
(19) INDIA
(22) Date of filing of Application :04/05/2024
(43) Publication Date : 07/11/2025

(54) Title of the invention : SELF-HEATING ENABLED DENTAL WAX CARVING ASSISTIVE DEVICE

(51) International classification	:A61M0025000000, A47J0043280000, H01L0023340000, F24F0011300000, A61C0013000000
(31) Priority Document No	:NA
(32) Priority Date	:NA
(33) Name of priority country	:NA
(86) International Application No	:NA
Filing Date	:NA
(87) International Publication No	: NA
(61) Patent of Addition to Application Number	:NA
Filing Date	:NA
(62) Divisional to Application Number	:NA
Filing Date	:NA

(71)**Name of Applicant :**
1)Siksha 'O' Anusandhan (Deemed to be University)
Address of Applicant :J-15, Khandagiri Square, Bhubaneswar-751030, Odisha, India. Bhubaneswar Orissa India
(72)**Name of Inventor :**
1)Dr. Rupsa Das
2)Pratyasa Panda
3)Dr. Saurav Panda

(57) Abstract :
A self-heating enabled dental wax carving assistive device, comprises of an elongated body 1 having a first end 2 and second end 3 developed to be hand-held by a medical practitioner, first end 2 carved with a first slot 4 for engaging different sized cutting, plurality of different sized scooping units 7 associated with the device, second slot 5 carved at the second end 3 engaged with the scooping unit 7 for aiding the practitioner in scooping any surplus amount of wax, a regulator switch 8 installed at mid-point of the body 1 to initiate heating of the engaged blades 6 or scooping units 7, a heating unit integrated in the first and second slots 5 that is actuated to heat the engaged blade 6 and scooping unit 7, and a thermostat is configured with the slots for monitoring temperature of the blades 6 and scooping units 7.

No. of Pages : 16 No. of Claims : 4

(12) PATENT APPLICATION PUBLICATION
(21) Application No.202431035482 A
(19) INDIA
(22) Date of filing of Application :04/05/2024
(43) Publication Date : 07/11/2025

(54) Title of the invention : METHOD FOR PREPARATION OF CROP RESIDUE-BASED MULTI NUTRIENT COMPOSITION FOR BIO-FORTIFICATION

(51) International classification	:C04B0018020000, C05D0009000000, G01N0001100000, A01G0024100000, G01N0033000000
(31) Priority Document No	:NA
(32) Priority Date	:NA
(33) Name of priority country	:NA
(86) International Application No	:NA
Filing Date	:NA
(87) International Publication No	: NA
(61) Patent of Addition to Application Number	:NA
Filing Date	:NA
(62) Divisional to Application Number	:NA
Filing Date	:NA

(71)**Name of Applicant :**
1)Siksha 'O' Anusandhan (Deemed to be University)
Address of Applicant :J-15, Khandagiri Square, Bhubaneswar-751030, Odisha, India. Bhubaneswar Orissa India
(72)**Name of Inventor :**
1)Prof. Jagmohan Lal Gulati
2)Prof. Priyabrata Pattanaik
3)Dr. Subhaprada Dash
4)Dr. Hara Prasada Tripathy
5)Prof. Dilip Kumar Mishra

(57) Abstract :
A method for preparation of crop residue-based multi nutrient composition for bio-fortification comprises the steps collecting crop residues of rice, maize and groundnut from homogenous field of respective crops at time of harvest followed by mixing properly to achieve consolidated composite sample of each crop, subjecting each of the sample of crop to proper sun drying for time duration in range of 45-50 hours, followed by burning samples with fire in earthen pot under open space, crop-wise and collecting ash separately, drawing 5-10 g of ash from each composite sample of ash and grounding thoroughly by using mortar and pestle for time duration in range of 50-70 minutes to obtain grounded ash, drawing 1-3g of grounded ash crop wise sample separately and mixing properly layer-wise with repeated steps to obtain ash mixture and subjecting the ash mixture to calcination using muffle furnace to obtain crop residue-based multi nutrient composition.

No. of Pages : 13 No. of Claims : 2

(12) PATENT APPLICATION PUBLICATION
(21) Application No.202433035259 A
(19) INDIA
(22) Date of filing of Application :03/05/2024
(43) Publication Date : 07/11/2025

(54) Title of the invention : 4-in-1 Smart Mask: Automatic Sanitization, Safe Distance Alert, Temp Read, Triple-Layer Protection against COVID-19

(51) International classification	:A61M0011000000, A41D0013110000, A62B0023020000, A61L0002240000, H04N0005225000
(31) Priority Document No	:NA
(32) Priority Date	:NA
(33) Name of priority country	:NA
(86) International Application No	:NA
Filing Date	:NA
(87) International Publication No	: NA
(61) Patent of Addition to Application Number	:
Filed on	:01/01/1900
(62) Divisional to Application Number	:NA
Filing Date	:NA

(71)**Name of Applicant :**
1)INSTITUTE OF ENGINEERING & MANAGEMENT
Address of Applicant :SALT LAKE ELECTRONICS COMPLEX, Y-12, GURUKUL, STREET NO. 18, EP BLOCK, SECTOR- V, BIDHANNAGAR, KOLKATA, WEST BENGAL. KOLKATA West Bengal India
(72)**Name of Inventor :**
1)DIBAKAR ROY CHOUDHURY
2)SOUHRIDYA BHATTACHARJEE
3)DEBASHIS SAHA

(57) Abstract :
This automated smart mask can sanitize our hands and belongings whenever we hold it within 20cm in front of that mask with the help of ultrasonic sensor. It's buzzer also creates a ring whenever there are persons or objects within 3ft for ensuring that everyone should maintain a safe distance from each other. This mask also shows the temperature of the person wearing it so that any changes in his/her body temperature can be easily identified by the other people so that they can take proper safety measures. This mask also offers triple layer of protection against viruses and pollutant. This mask can be easily programmed according to our requirement. This mask works on rechargeable battery and is fully automatic. This mask can be made more compact in future.

No. of Pages : 7 No. of Claims : 10

(12) PATENT APPLICATION PUBLICATION
(21) Application No.202434036680 A
(19) INDIA
(22) Date of filing of Application :09/05/2024
(43) Publication Date : 07/11/2025

(54) Title of the invention : DATA PROTECTION SYSTEM

(51) International classification	:G06F0021620000, H04L0009080000, G06F0016182000, G06F0011140000, G06F0016110000	(71)**Name of Applicant :** **1)WOO, Hye Ryun** Address of Applicant :101-dong 1503-ho, 208 Yeongdeungpo-dong 7-ga, Yeongdeungpo-gu, Seoul, Republic of Korea Republic of Korea (72)**Name of Inventor :** **1)WOO, Hye Ryun**
(31) Priority Document No	:10-2024-0058250	
(32) Priority Date	:02/05/2024	
(33) Name of priority country	:Republic of Korea	
(86) International Application No	:NA	
Filing Date	:NA	
(87) International Publication No	: NA	
(61) Patent of Addition to Application Number	:NA	
Filing Date	:NA	
(62) Divisional to Application Number	:NA	
Filing Date	:NA	

(57) Abstract :
According to exemplary embodiments of the present invention, data protection storage is provided, the storage comprising: a standard network file server receiving a file access request from a user by being communicatively linked with a standard network driver mounted on an operating system of a client terminal; and a data protection processing part allowing a data protection processed file to be provided to the client terminal by data protection processing of a file requested in response to data protection policy set in a policy part when the file access request is received from a file system mapped to storage of the standard network file server. FIG. 3

No. of Pages : 23 No. of Claims : 7

(12) PATENT APPLICATION PUBLICATION
(21) Application No.202534036717 A
(19) INDIA
(22) Date of filing of Application :16/04/2025
(43) Publication Date : 07/11/2025

(54) Title of the invention : METHOD OF MANUFACTURING FORMED PRODUCT

(51) International classification	:B60J0005040000, G03F0007000000, B21D0053880000, C25D0005500000, B21D0022260000	(71)**Name of Applicant :** **1)FUTABA INDUSTRIAL CO., LTD.** Address of Applicant :1, Aza-ochaya, Hashime-cho, Okazaki-shi, Aichi 444-8558, Japan Japan (72)**Name of Inventor :** **1)AOKI, Satoshi** **2)MINAMI, Fuka**
(31) Priority Document No	:2024-074376	
(32) Priority Date	:01/05/2024	
(33) Name of priority country	:Japan	
(86) International Application No	:NA	
Filing Date	:NA	
(87) International Publication No	: NA	
(61) Patent of Addition to Application Number	:NA	
Filing Date	:NA	
(62) Divisional to Application Number	:NA	
Filing Date	:NA	

(57) Abstract :
A method of manufacturing a formed product is provided. The method includes: joining a first member and a second member to each other by welding top plate corresponding portions to each other in a state where the first member is placed on the second member to include an extending portion; curving vertical wall corresponding portions and the extending portion of the plate members toward a moving direction by making a metal press mold contact the extending portion; and forming top plate portion and vertical wall portion by pressing the vertical wall corresponding portions of the plate members by the metal press mold.

No. of Pages : 40 No. of Claims : 7

(12) PATENT APPLICATION PUBLICATION
(21) Application No.202534037499 A
(19) INDIA
(22) Date of filing of Application :18/04/2025
(43) Publication Date : 07/11/2025

(54) Title of the invention : METHOD OF MANUFACTURING MOLDED PRODUCT

(51) International classification	:B21D0005010000, H01R0024600000, B23K0033000000, H01R0013240000, H01M0050119000
(31) Priority Document No	:2024-074375
(32) Priority Date	:01/05/2024
(33) Name of priority country	:Japan
(86) International Application No	:NA
Filing Date	:NA
(87) International Publication No	: NA
(61) Patent of Addition to Application Number	:NA
Filing Date	:NA
(62) Divisional to Application Number	:NA
Filing Date	:NA

(71)**Name of Applicant :**
1)FUTABA INDUSTRIAL CO., LTD.
Address of Applicant :1, Aza-ochaya, Hashime-cho, Okazaki-shi, Aichi 444-8558 Japan Japan
(72)**Name of Inventor :**
1)AOKI, Satoshi
2)MINAMI, Fuka

(57) Abstract :
A method of manufacturing a molded product is provided. The method of manufacturing a molded product includes forming a first joining portion by placing an inner metallic plate and an outer metallic plate on each other and welding them together; bending, after forming the first joining portion, the outer metallic plate with the inner metallic plate in a first direction by performing a first press working; and forming, after the first press working, a first surface, a second surface, and a curved portion on the outer metallic plate by performing a second press working. In the second press working, the outer metallic plate is bent with the inner metallic plate in a second direction to form an oppositely curved portion which is bent in a direction opposite from a bending direction of the curved portion on the outer metallic plate.

No. of Pages : 41 No. of Claims : 5

(12) PATENT APPLICATION PUBLICATION
(21) Application No.202537072620 A
(19) INDIA
(22) Date of filing of Application :30/07/2025
(43) Publication Date : 07/11/2025

(54) Title of the invention : SYSTEM FOR DETERMINING THE PRESENCE OF A NON-OPERATIVE LOCAL CONTROL MEANS IN A CONVOY OF VEHICLES, AND CONVOY OF VEHICLES

(51) International classification	:H04W 4/46, B61L 15/00, B61L 25/02, H04L 67/12, H04L 12/40	(71)**Name of Applicant :** **1)FAIVELEY TRANSPORT ITALIA S.P.A.** Address of Applicant :Via Volvera 51 I-10045 Piossasco (Torino) Italy
(31) Priority Document No	:102023000000396	(72)**Name of Inventor :**
(32) Priority Date	:13/01/2023	**1)IMBERT, Luc**
(33) Name of priority country	:Italy	**2)GRASSO, Angelo**
(86) International Application No	:PCT/IB2024/050338	**3)TIONE, Roberto**
Filing Date	:12/01/2024	**4)FREA, Matteo**
(87) International Publication No	:WO 2024/150192	
(61) Patent of Addition to Application Number	:NA	
Filing Date	:NA	
(62) Divisional to Application Number	:NA	
Filing Date	:NA	

(57) Abstract :
A system (100) for determining the presence of a non-operative local control means in a convoy of vehicles (C) is described. The system (100) comprises a convoy communication line that comprises, for each vehicle, a respective local control means (110), a resistive load (R) arranged to be connected to a first line section (104), and an electrical power generation means (124) arranged to supply a predetermined voltage value to a second line section (106). Each local control means installed in a respective vehicle, in response to receiving an activation signal and when powered by power supply means, is arranged to: - measure a current value (I) provided by the electrical power generation means (124) to the line second (106) of said respective vehicle; - determine that at least the vehicle directly connected in series to the second line section (106) of said respective vehicle has a local control means (110) which is not operative, according to the measured current value, the predetermined voltage value and the predetermined resistance value of the resistive loads (R).

No. of Pages : 17 No. of Claims : 12

(12) PATENT APPLICATION PUBLICATION
(21) Application No.202537086227 A
(19) INDIA
(22) Date of filing of Application :11/09/2025
(43) Publication Date : 07/11/2025

(54) Title of the invention : USED NEEDLE SEPARATING DEVICE

(51) International classification	:A61M 5/32, A61B 50/30, A61L 2/10
(31) Priority Document No	:10-2023-0030531
(32) Priority Date	:08/03/2023
(33) Name of priority country	:Republic of Korea
(86) International Application No	:PCT/KR2024/001504
Filing Date	:01/02/2024
(87) International Publication No	:WO 2024/186005
(61) Patent of Addition to Application Number	:NA
Filing Date	:NA
(62) Divisional to Application Number	:NA
Filing Date	:NA

(71)**Name of Applicant :**
1)MOBIU CO .,LTD
Address of Applicant :2nd Fl., 119 Nangok-ro, Gwanak-gu, Seoul 08859 Republic of Korea
(72)**Name of Inventor :**
1)KIM, Hyung-Seok

(57) Abstract :
The present invention relates to a used needle separating device in which engagement teeth for drive rotation are formed along the circumference on one side, and a non-engagement portion for accommodating a used needle and engagement teeth for separating (pulling out) the used needle are formed along the circumference on the other side.

No. of Pages : 28 No. of Claims : 16

(12) PATENT APPLICATION PUBLICATION
(21) Application No.202537086270 A
(19) INDIA
(22) Date of filing of Application :11/09/2025
(43) Publication Date : 07/11/2025

(54) Title of the invention : WATER PIPE

(51) International classification	:A24F 40/40, A24F 1/30, A24F 40/485, A24F 40/50
(31) Priority Document No	:2302452.4
(32) Priority Date	:21/02/2023
(33) Name of priority country	:U.K.
(86) International Application No	:PCT/IB2024/051617
Filing Date	:20/02/2024
(87) International Publication No	:WO 2024/176111
(61) Patent of Addition to Application Number	:NA
Filing Date	:NA
(62) Divisional to Application Number	:NA
Filing Date	:NA

(71)**Name of Applicant :**
1)AIR IP HOLDINGS LIMITED
Address of Applicant :Unit OT 20-33, Level 20, Central Park Offices Dubai International Financial Centre Dubai, 79947 U.A.E.
(72)**Name of Inventor :**
1)DAWSON, Paul
2)BROWN, Thomas
3)STAFFORD, Jon

(57) Abstract :
A water pipe is disclosed as having a heating chamber for vaporising a consumable product in use. A coolant reservoir in the form of a water tank is provided for cooling the vapourised consumable product. An inlet allows air into the heating chamber and an outlet is provided through which a user can inhale the vaporised smoking product. The outlet is downstream of the coolant reservoir in a flow pathway through the water pipe from the inlet through the heating chamber and coolant reservoir to the outlet. The air pathway has a second air inlet to provide air into the air pathway at a point between the inlet and the outlet and an adjustment mechanism for the second air inlet. The second air inlet may be at a hose or mouthpiece connected to the outlet. The second air inlet could be in a purge valve assembly or at a mouth of the coolant reservoir. A vapour conduit extends from the heating chamber to the water reservoir. A non-return valve in the form of a float valve may be provided to prevent backflow of water up the conduit. A thermal insulator or break may be configured to thermally isolate at least a portion of vapour conduit from the heating chamber.

No. of Pages : 42 No. of Claims : 35

(12) PATENT APPLICATION PUBLICATION
(21) Application No.202537089754 A
(19) INDIA
(22) Date of filing of Application :20/09/2025
(43) Publication Date : 07/11/2025

(54) Title of the invention : CRYSTALLINE FORM OF AN EP4 ANTAGONIST

(51) International classification	:C07C 235/14, A61P 35/00
(31) Priority Document No	:23165829.5
(32) Priority Date	:31/03/2023
(33) Name of priority country	:EPO
(86) International Application No	:PCT/GB2024/050853
Filing Date	:28/03/2024
(87) International Publication No	:WO 2024/201051
(61) Patent of Addition to Application Number	:NA
Filing Date	:NA
(62) Divisional to Application Number	:NA
Filing Date	:NA

(71)**Name of Applicant :**
1)NXERA PHARMA UK LIMITED
Address of Applicant :Granta Park Great Abington Cambridge Cambridgeshire CB21 6DG U.K.
(72)**Name of Inventor :**
1)MANAGE, Ajith
2)MOHR, Amandine

(57) Abstract :
This invention relates to a crystalline form of the compound of Formula (1) (1) (1). The invention also relates to compositions and pharmaceutical compositions comprising the crystalline form, to medical uses of the crystalline form, and methods of preparing the crystalline form.

No. of Pages : 50 No. of Claims : 15

(12) PATENT APPLICATION PUBLICATION
(21) Application No.202537095752 A
(19) INDIA
(22) Date of filing of Application :06/10/2025
(43) Publication Date : 07/11/2025

(54) Title of the invention : AUTOMATIC CLEANING APPARATUS

(51) International classification	:A47L 1/02, A47L 5/00, A47L 9/00, A47L 11/24, A47L 11/32
(31) Priority Document No	:202320571678.X
(32) Priority Date	:21/03/2023
(33) Name of priority country	:China
(86) International Application No	:PCT/CN2024/080628
Filing Date	:07/03/2024
(87) International Publication No	:WO 2024/193363
(61) Patent of Addition to Application Number	:NA
Filing Date	:NA
(62) Divisional to Application Number	:NA
Filing Date	:NA

(71)**Name of Applicant :**
1)BEIJING ROBOROCK TECHNOLOGY CO., LTD.
Address of Applicant :Room 1001, Floor 10, Building 3, Yard 17, Anju Road Changping District, Beijing 102206 China
(72)**Name of Inventor :**
1)ZHANG, Baokui

(57) Abstract :
Provided in the present application is an automatic cleaning apparatus, comprising: a mobile platform, configured to automatically move on an operation surface, the mobile platform comprising a bottom housing; and a cleaning module, configured to be assembled on the bottom housing. The cleaning module comprises: a rolling brush support, configured to support a rolling brush; a motor, arranged on one side of the rolling brush support; and an elastic member, arranged on the side of the rolling brush support close to the motor, wherein the elastic member can be hitched to the bottom housing by means of at least one end.

No. of Pages : 16 No. of Claims : 11

(12) PATENT APPLICATION PUBLICATION
(21) Application No.202537095793 A
(19) INDIA
(22) Date of filing of Application :06/10/2025
(43) Publication Date : 07/11/2025

(54) Title of the invention : TWO-PART HIGH PERCENTAGE BIO-BASED POLYMERIC COMPOSITIONS

(51) International classification	:C08G 59/40, C09J 163/00
(31) Priority Document No	:63/461803
(32) Priority Date	:25/04/2023
(33) Name of priority country	:U.S.A.
(86) International Application No	:PCT/US2024/026217
Filing Date	:25/04/2024
(87) International Publication No	:WO 2024/226760
(61) Patent of Addition to Application Number	:NA
Filing Date	:NA
(62) Divisional to Application Number	:NA
Filing Date	:NA

(71)**Name of Applicant :**
1)ZEPHYROS, INC.
Address of Applicant :160 McLean Drive Romeo, MI 48065 U.S.A.
(72)**Name of Inventor :**
1)CZAPLICKI, Michael
2)PAQUET, Donald
3)COX, Kevin
4)MORTAZAVIAN, Hamid

(57) Abstract :
The present teachings provide for a curable adhesive formulation comprising an A-side with one or more epoxy resins and a B-side with an acidic phosphoric constituent, wherein the adhesive includes at least 30% by weight bio-based materials.

No. of Pages : 32 No. of Claims : 23

(12) PATENT APPLICATION PUBLICATION
(21) Application No.202537095861 A
(19) INDIA
(22) Date of filing of Application :06/10/2025
(43) Publication Date : 07/11/2025

(54) Title of the invention : COMPOSITION

(51) International classification	:C11D 1/29, C11D 3/04, C11D 3/37, C11D 17/00
(31) Priority Document No	:23167400.3
(32) Priority Date	:11/04/2023
(33) Name of priority country	:EPO
(86) International Application No	:PCT/EP2024/058869
Filing Date	:02/04/2024
(87) International Publication No	:WO 2024/213430
(61) Patent of Addition to Application Number	:NA
Filing Date	:NA
(62) Divisional to Application Number	:NA
Filing Date	:NA

(71)**Name of Applicant :**
1)UNILEVER GLOBAL IP LIMITED
Address of Applicant :Port Sunlight Wirral Merseyside CH62 4ZD U.K.
(72)**Name of Inventor :**
1)BATCHELOR, Stephen, Norman
2)BENNETT, Julie

(57) Abstract :
Detergent composition comprising 0.5 to 10% wt. alkoxylated cationic or zwitterionic di or polyamine polymer and an alkyl ether sulphate, wherein the alkyl ether sulphate comprises C12 and C14 alkyl chains and has a mole average of 2.0 to 4.0 ethoxylate units, wherein said alcohol ether sulfate contains less than 10wt% of alcohol ether sulfate with zero ethoxylate groups.

No. of Pages : 53 No. of Claims : 14

(12) PATENT APPLICATION PUBLICATION
(21) Application No.202537095862 A
(19) INDIA
(22) Date of filing of Application :06/10/2025
(43) Publication Date : 07/11/2025

(54) Title of the invention : COMPOSITION

(51) International classification	:C11D 1/29, C11D 3/04, C11D 3/50, C11D 11/00, C11D 17/00
(31) Priority Document No	:23167395.5
(32) Priority Date	:11/04/2023
(33) Name of priority country	:EPO
(86) International Application No	:PCT/EP2024/058924
Filing Date	:02/04/2024
(87) International Publication No	:WO 2024/213438
(61) Patent of Addition to Application Number	:NA
Filing Date	:NA
(62) Divisional to Application Number	:NA
Filing Date	:NA

(71)**Name of Applicant :**
1)UNILEVER GLOBAL IP LIMITED
Address of Applicant :Port Sunlight Wirral Merseyside CH62 4ZD U.K.
(72)**Name of Inventor :**
1)BATCHELOR, Stephen Norman
2)ZHENG, Zhaoliang

(57) Abstract :
Detergent composition comprising fragrance and an alcohol ether sulphate, wherein the alcohol ether sulphate comprises C12 and C14 alkyl chains and has a mole average of 2.0 to 4.0 ethoxylate units, wherein said alcohol ether sulfate contains less than 10wt% of alcohol ether sulfate with zero ethoxylate groups and wherein the fragrance comprises a fragrance component selected from limonene, tonalid, octahydrotetramethyl acetophenone (OTNE), cyclamen aldehyde, of C8 to C12 linear and branched aldehyde, ß-Ionone, dihydromyrencol, hexyl salicylate, and mixtures thereof.

No. of Pages : 54 No. of Claims : 12

(12) PATENT APPLICATION PUBLICATION
(21) Application No.202537095864 A
(19) INDIA
(22) Date of filing of Application :06/10/2025
(43) Publication Date : 07/11/2025

(54) Title of the invention : COMPOSITION

(51) International classification	:C11D 1/29, C11D 3/04, C11D 11/00, C11D 17/00, C11D 3/37
(31) Priority Document No	:23167394.8
(32) Priority Date	:11/04/2023
(33) Name of priority country	:EPO
(86) International Application No	:PCT/EP2024/058955
Filing Date	:02/04/2024
(87) International Publication No	:WO 2024/213443
(61) Patent of Addition to Application Number	:NA
Filing Date	:NA
(62) Divisional to Application Number	:NA
Filing Date	:NA

(71)**Name of Applicant :**
1)UNILEVER GLOBAL IP LIMITED
Address of Applicant :Port Sunlight Wirral Merseyside CH62 4ZD U.K.
(72)**Name of Inventor :**
1)BATCHELOR, Stephen Norman
2)BENNETT, Julie

(57) Abstract :
Detergent composition comprising a polyester-based soil release polymer and an alkyl ether sulphate, wherein the alkyl ether sulphate comprises C12 and C14 alkyl chains and has a mole average of 2.0 to 4.0 ethoxylate units, wherein said alcohol ether sulfate contains less than 10wt% of alcohol ether sulfate with zero ethoxylate groups.

No. of Pages : 51 No. of Claims : 10

(12) PATENT APPLICATION PUBLICATION
(21) Application No.202537096209 A
(19) INDIA
(22) Date of filing of Application :07/10/2025
(43) Publication Date : 07/11/2025

(54) Title of the invention : COMPOSITION

(51) International classification	:C11D 1/29, C11D 3/04, C11D 3/40, C11D 11/00, C11D 17/00
(31) Priority Document No	:23167396.3
(32) Priority Date	:11/04/2023
(33) Name of priority country	:EPO
(86) International Application No	:PCT/EP2024/057675
Filing Date	:21/03/2024
(87) International Publication No	:WO 2024/213376
(61) Patent of Addition to Application Number	:NA
Filing Date	:NA
(62) Divisional to Application Number	:NA
Filing Date	:NA

(71)**Name of Applicant :**
1)UNILEVER GLOBAL IP LIMITED
Address of Applicant :Port Sunlight Wirral Merseyside CH62 4ZD U.K.
(72)**Name of Inventor :**
1)BATCHELOR, Stephen, Norman
2)BURNHAM, Neil, Stephen

(57) Abstract :
Detergent composition comprising an alkoxylated dye and an alkyl ether sulphate, wherein the alkyl ether sulphate comprises C12 and C14 alkyl chains and has a mole average of 2.0 to 4.0 ethoxylate units, wherein said alcohol ether sulfate contains less than 10wt% of alcohol ether sulfate with zero ethoxylate groups.

No. of Pages : 55 No. of Claims : 14

(12) PATENT APPLICATION PUBLICATION
(21) Application No.202537096210 A
(19) INDIA
(22) Date of filing of Application :07/10/2025
(43) Publication Date : 07/11/2025

(54) Title of the invention : COMPOSITION

(51) International classification	:C11D 1/29, C11D 3/04, C11D 11/00, C11D 17/00
(31) Priority Document No	:23167398.9
(32) Priority Date	:11/04/2023
(33) Name of priority country	:EPO
(86) International Application No	:PCT/EP2024/058859
Filing Date	:02/04/2024
(87) International Publication No	:WO 2024/213428
(61) Patent of Addition to Application Number	:NA
Filing Date	:NA
(62) Divisional to Application Number	:NA
Filing Date	:NA

(71)**Name of Applicant :**
1)UNILEVER GLOBAL IP LIMITED
Address of Applicant :Port Sunlight Wirral Merseyside CH62 4ZD U.K.
(72)**Name of Inventor :**
1)BATCHELOR, Stephen, Norman
2)BENNETT, Julie

(57) Abstract :
Detergent composition comprising a branched alcohol ether sulphate surfactant and an alkyl ether sulphate, wherein the alkyl ether sulphate comprises C12 and C14 alkyl chains and has a mole average of 2.0 to 4.0 ethoxylate units, wherein said alcohol ether sulfate contains less than 10wt% of alcohol ether sulfate with zero ethoxylate groups.

No. of Pages : 54 No. of Claims : 15

(12) PATENT APPLICATION PUBLICATION
(21) Application No.202537096333 A
(19) INDIA
(22) Date of filing of Application :07/10/2025
(43) Publication Date : 07/11/2025

(54) Title of the invention : NOVEL DERIVATIVES OF GLYCEROL

(51) International classification	:C07D 317/22, C07D 317/24, C07D 319/06, A61Q 13/00, C11B 9/00
(31) Priority Document No	:NA
(32) Priority Date	:NA
(33) Name of priority country	:NA
(86) International Application No	:PCT/EP2023/064366
Filing Date	:30/05/2023
(87) International Publication No	:WO 2024/051975
(61) Patent of Addition to Application Number	:NA
Filing Date	:NA
(62) Divisional to Application Number	:NA
Filing Date	:NA

(71)**Name of Applicant :**
1)SYMRISE AG
Address of Applicant :Mühlenfeldstraße 1 37603 Holzminden Germany
(72)**Name of Inventor :**
1)KRAFT, Philip
2)KLEINE-BENNE, Lara-Joy
3)HÖLSCHER, Bernd
4)WARNEKE, Patrick

(57) Abstract :
The present invention relates to a compound of formula (I) as defined herein. The present invention further relates to a mixture comprising or consisting of a compound of formula (la) and a compound of formula (lb) as defined herein, wherein the compound of formula (la) and the compound of formula (lb) are compounds with identical constitutional formulae. It also relates to methods for manufacturing a compound of formula (I) and/or a compound of formula (VIII) as defined herein. Moreover, the present invention relates to a compound of formula (VIII) as defined herein and to the use of a compound of formula (I) and/or of a compound of formula (VIII) as defined herein as fragrance and/or aroma substance(s). Finally, the present invention relates to fragrance and/or aroma compositions and products as defined herein, methods for manufacturing a product as defined herein, and methods for providing and/or enhancing a transparent soft white-floral jasminic note to/in a product.

No. of Pages : 130 No. of Claims : 15

(12) PATENT APPLICATION PUBLICATION

(21) Application No.202537096396 A

(19) INDIA

(22) Date of filing of Application :07/10/2025

(43) Publication Date : 07/11/2025

(54) Title of the invention : DEVICE FOR FASTENING A ROTOR BLADE TO A HUB BODY, AND MULTI-PART HUB ASSEMBLY FOR A WIND TURBINE

(51) International classification	:F03D 1/06, F03D 80/70
(31) Priority Document No	:10 2023 110 410.1
(32) Priority Date	:24/04/2023
(33) Name of priority country	:Germany
(86) International Application No	:PCT/EP2024/060969
Filing Date	:22/04/2024
(87) International Publication No	:WO 2024/223500
(61) Patent of Addition to Application Number	:NA
Filing Date	:NA
(62) Divisional to Application Number	:NA
Filing Date	:NA

(71)**Name of Applicant :**

1)THYSSENKRUPP ROTHE ERDE GERMANY GMBH

Address of Applicant :Tremoniastr. 5 - 11 44137 Dortmund Germany

2)THYSSENKRUPP AG

(72)**Name of Inventor :**

1)BECKER, Daniel

2)BURTCHEN, Marco

3)TÖFKE, Matthias

4)SPINTIG, Wilfried

(57) Abstract :

The invention relates to a device (1) for fastening a rotor blade (140) to a hub body (13) of a wind turbine (100), said device comprising a blade-side extender bearing unit (2) having a first bearing ring (3) with a first bolt circle (4) for fastening to the hub body (13), and a second bearing ring (5) for fastening to the rotor blade (140), the second bearing ring (5) being arranged coaxially to the first bearing ring (3) so as to be rotatable about the common bearing axis (A), the first bearing ring (3) being integrally formed with a rotor hub extension (9) which extends on the hub side in the direction of the bearing axis (A) beyond the second bearing ring (5), with the first bolt circle (4) being arranged in the hub-side end region (E) of said rotor hub extension, the device (1) also comprising a hub-side extender bearing unit (10) which is plate-shaped and has a second bolt circle (11), the first bolt circle (4) being aligned with the second bolt circle (11) for joint fastening to the hub body (13). The invention also relates to a multi-part hub assembly (150) which is held together by means of at least one fastening device (1) according to the invention.

No. of Pages : 17 No. of Claims : 11

(12) PATENT APPLICATION PUBLICATION
(21) Application No.202537096704 A
(19) INDIA
(22) Date of filing of Application :07/10/2025
(43) Publication Date : 07/11/2025

(54) Title of the invention : INCLINED FUEL TRANSFER SYSTEM BETWEEN CONTAINMENT AND FUEL HANDLING BUILDING

(51) International classification	:G21C 19/18, G21C 19/19, G21C 19/20, G21C 19/32
(31) Priority Document No	:18/184324
(32) Priority Date	:15/03/2023
(33) Name of priority country	:U.S.A.
(86) International Application No	:PCT/US2024/019685
Filing Date	:13/03/2024
(87) International Publication No	:WO 2024/192095
(61) Patent of Addition to Application Number	:NA
Filing Date	:NA
(62) Divisional to Application Number	:NA
Filing Date	:NA

(71)**Name of Applicant :**
1)WESTINGHOUSE ELECTRIC COMPANY LLC
Address of Applicant :1000 Westinghouse Drive Suite 141 Cranberry Township, Pennsylvania 16066 U.S.A.
(72)**Name of Inventor :**
1)CHRZANOWSKI, Jerzy
2)CLOSKY, Nancy Burns

(57) Abstract :
Disclosed is a fuel transfer system comprises a first housing, a second housing, and a fuel transfer tube connecting the first housing to the second housing, wherein the fuel transfer tube is disposed at an elevational angle. The fuel transfer system comprises a fuel transfer cart configured to slidably move from the first housing to the second housing through the fuel transfer tube.

No. of Pages : 16 No. of Claims : 20

(12) PATENT APPLICATION PUBLICATION
(21) Application No.202537096952 A
(19) INDIA
(22) Date of filing of Application :08/10/2025
(43) Publication Date : 07/11/2025

(54) Title of the invention : METHOD FOR THE PREPARATION OF MIXED RARE EARTH METAL CARBONATES FROM MONAZITE

(51) International classification	:C22B 59/00, C22B 60/02, C01F 15/00, C01F 11/46, C01F 13/00
(31) Priority Document No	:23382237.8
(32) Priority Date	:14/03/2023
(33) Name of priority country	:EPO
(86) International Application No	:PCT/EP2024/056660
Filing Date	:13/03/2024
(87) International Publication No	:WO 2024/189073
(61) Patent of Addition to Application Number	:NA
Filing Date	:NA
(62) Divisional to Application Number	:NA
Filing Date	:NA

(71)**Name of Applicant :**
1)TÉCNICAS REUNIDAS, S.A.
Address of Applicant :Avenida de Burgos, 89 Adequa - Edificio 6 E-28050 Madrid Spain
(72)**Name of Inventor :**
1)LERET MOLTÓ, Pilar
2)PINEDO GONZÁLEZ, Mª Teresa
3)ÁLVAREZ CARREÑO, Carlos
4)FRADES TAPIA, Maria

(57) Abstract :
The present invention relates to a method for the preparation of mixed rare earth metal carbonates from monazite, this method comprising a first leaching with an alkaline hydroxide and a two-step second leaching in the presence of hydrochloric acid.

No. of Pages : 45 No. of Claims : 51

(12) PATENT APPLICATION PUBLICATION
(21) Application No.202537096978 A
(19) INDIA
(22) Date of filing of Application :08/10/2025
(43) Publication Date : 07/11/2025

(54) Title of the invention : PEPTIDE HAVING SKIN CONDITION IMPROVEMENT ACTIVITY AND USE THEREOF

(51) International classification	:C07K 7/06, A61K 8/64, A61Q 19/00
(31) Priority Document No	:10-2023-0044929
(32) Priority Date	:05/04/2023
(33) Name of priority country	:Republic of Korea
(86) International Application No	:PCT/KR2024/004241
Filing Date	:02/04/2024
(87) International Publication No	:WO 2024/210459
(61) Patent of Addition to Application Number	:NA
Filing Date	:NA
(62) Divisional to Application Number	:NA
Filing Date	:NA

(71)**Name of Applicant :**
1)CAREGEN CO., LTD.
Address of Applicant :46-38, LS-ro 91beon-gil, Dongan-gu, Anyang-si, Gyeonggi-do 14119 Republic of Korea
(72)**Name of Inventor :**
1)CHUNG, Yong Ji
2)KIM, Eun Mi
3)LEE, Eung Ji

(57) Abstract :
The present application relates to a peptide having skin condition improvement activity and a use thereof, and provides a peptide comprising an amino acid sequence of SEQ ID NO: 1 and a cosmetic composition for improving skin condition comprising the peptide as an effective ingredient.

No. of Pages : 19 No. of Claims : 6

(12) PATENT APPLICATION PUBLICATION
(21) Application No.202537097036 A
(19) INDIA
(22) Date of filing of Application :08/10/2025
(43) Publication Date : 07/11/2025

(54) Title of the invention : COLOR OPTIMIZATION OF ACTIVATED CLAY USING AMMONIA

(51) International classification :C04B 7/12
(31) Priority Document No :10 2023 116 181.4
(32) Priority Date :21/06/2023
(33) Name of priority country :Germany
(86) International Application No :PCT/EP2024/066005
Filing Date :11/06/2024
(87) International Publication No :WO 2024/260784
(61) Patent of Addition to Application Number :NA
Filing Date :NA
(62) Divisional to Application Number :NA
Filing Date :NA

(71)**Name of Applicant :**
1)THYSSENKRUPP POLYSIUS GMBH
Address of Applicant :Graf-Galen-Str. 17 59269 Beckum Germany
2)THYSSENKRUPP AG
(72)**Name of Inventor :**
1)FLASSPÖHLER, Melanie
2)JACOME RINCON, Carlos

(57) Abstract :
The invention relates to a device for activating clay, wherein the device has an activation device for thermal activation purposes and a color optimization device (30) which is connected downstream of the activation device. The invention is characterized in that the color optimization device (30) has a feed line for ammonia or an NH3-containing compound (31).

No. of Pages : 7 No. of Claims : 10

(12) PATENT APPLICATION PUBLICATION
(21) Application No.202537097353 A
(19) INDIA
(22) Date of filing of Application :09/10/2025
(43) Publication Date : 07/11/2025

(54) Title of the invention : HANDLE FOR A LITHIUM ION BATTERY

(51) International classification	:H01M 50/244, H01M 50/256, H01M 50/262, H01M 50/296, H01M 50/249
(31) Priority Document No	:18/323781
(32) Priority Date	:25/05/2023
(33) Name of priority country	:U.S.A.
(86) International Application No	:PCT/US2024/026408
Filing Date	:26/04/2024
(87) International Publication No	:WO 2024/242808
(61) Patent of Addition to Application Number	:NA
Filing Date	:NA
(62) Divisional to Application Number	:NA
Filing Date	:NA

(71)**Name of Applicant :**
1)THE NOCO COMPANY
Address of Applicant :30339 Diamond Parkway, #102 Glenwillow, OH 44139 U.S.A.
(72)**Name of Inventor :**
1)UNDERHILL, Derek, Michael

(57) Abstract :
The present disclosure relates to a battery handle that is removably attachable to a battery. The handle may comprise a body comprising first end, a second end opposite the first end, and a grip portion extending between the first end and the second end in a first direction, wherein the body is removably attachable to the battery via at least one battery terminal, and the at least one battery terminal is configured to be in electrical connection with the battery.

No. of Pages : 19 No. of Claims : 20

(12) PATENT APPLICATION PUBLICATION
(21) Application No.202537098087 A
(19) INDIA
(22) Date of filing of Application :11/10/2025
(43) Publication Date : 07/11/2025

(54) Title of the invention : DUST BOX, SELF-MOVING CLEANING DEVICE, AND CLEANING ROBOT SYSTEM

(51) International classification	:A47L 11/40, A47L 11/28
(31) Priority Document No	:202320570525.3
(32) Priority Date	:21/03/2023
(33) Name of priority country	:China
(86) International Application No	:PCT/CN2023/142742
Filing Date	:28/12/2023
(87) International Publication No	:WO 2024/193168
(61) Patent of Addition to Application Number	:NA
Filing Date	:NA
(62) Divisional to Application Number	:NA
Filing Date	:NA

(71)**Name of Applicant :**
1)BEIJING ROBOROCK TECHNOLOGY CO., LTD.
Address of Applicant :Room 1001, Floor 10, Building 3, Yard 17, Anju Road, Changping District Beijing 102206 China
(72)**Name of Inventor :**
1)QIU, Shuaibing
2)ZHANG, Haozhe
3)YU, Luping

(57) Abstract :
Provided are a dust box (160), a self-moving cleaning device (100), and a cleaning robot system. The dust box (160) is provided with a garbage storage cavity (162), and an air inlet (163) and a dust discharge port (164) that are communicated with the garbage storage cavity (162), the side wall of the garbage storage cavity (162) where the dust discharge port (164) is located and other side walls of the garbage storage cavity (162) in the circumferential direction being obliquely arranged; and a flow guide member (165) provided in the garbage storage cavity (162) and used for guiding an airflow flowing into the air inlet (163) to the dust discharge port (164). Therefore, the problem of garbage in the dust box (160) gathering in the corner of the garbage storage cavity (162) without being collected can be avoided, thereby improving the thoroughness of collecting the garbage in the dust box (160) to a base station (200).

No. of Pages : 42 No. of Claims : 10

(12) PATENT APPLICATION PUBLICATION
(21) Application No.202537098096 A
(19) INDIA
(22) Date of filing of Application :11/10/2025
(43) Publication Date : 07/11/2025

(54) Title of the invention : AMBIENT TEMPERATURE RAPID CURE SYSTEM OF OXIRANE-CONTAINING COMPOUNDS

(51) International classification	:C08G 59/02, C08G 59/40
(31) Priority Document No	:63/461732
(32) Priority Date	:25/04/2023
(33) Name of priority country	:U.S.A.
(86) International Application No	:PCT/US2024/026156
Filing Date	:25/04/2024
(87) International Publication No	:WO 2024/226711
(61) Patent of Addition to Application Number	:NA
Filing Date	:NA
(62) Divisional to Application Number	:NA
Filing Date	:NA

(71)**Name of Applicant :**
1)ZEPHYROS, INC.
Address of Applicant :160 McLean Drive Romeo, MI 48065 U.S.A.
(72)**Name of Inventor :**
1)CZAPLICKI, Michael
2)HABLE, Chris
3)MILLER, Ira
4)PAQUET, Donald

(57) Abstract :
An adhesive comprising an oxirane-containing compound and an acidic phosphorous curative. The adhesive gels, at a temperature of about 0 °C to 50 °C and upon mixing the aliphatic disubstituted oxirane and the acidic phosphorous curative, in about 10 minutes or less.

No. of Pages : 33 No. of Claims : 38

(12) PATENT APPLICATION PUBLICATION
(21) Application No.202537098373 A
(19) INDIA
(22) Date of filing of Application :13/10/2025
(43) Publication Date : 07/11/2025

(54) Title of the invention : COMMUNICATION METHOD AND COMMUNICATION APPARATUS

(51) International classification	:H04W 4/029	(71)**Name of Applicant :**
(31) Priority Document No	:202310384600.1	**1)HUAWEI TECHNOLOGIES CO., LTD.**
(32) Priority Date	:06/04/2023	Address of Applicant :Huawei Administration Building, Bantian, Longgang District Shenzhen, Guangdong 518129 China
(33) Name of priority country	:China	
(86) International Application No	:PCT/CN2024/080558	(72)**Name of Inventor :**
Filing Date	:07/03/2024	**1)XU, Shengfeng**
(87) International Publication No	:WO 2024/207928	
(61) Patent of Addition to Application Number	:NA	
Filing Date	:NA	
(62) Divisional to Application Number	:NA	
Filing Date	:NA	

(57) Abstract :
The present application relates to the technical field of wireless communications, and provides a communication method and a communication apparatus. The method comprises: a terminal to be positioned acquires the identifier of a core network device; and the terminal to be positioned sends first information to a plurality of auxiliary terminals, the first information being used for instructing the auxiliary terminals to send measurement data to the core network device, the measurement data comprising sidelink positioning measurement data between each auxiliary terminal and the terminal to be positioned, and the measurement data sent by the plurality of auxiliary terminals being used by the core network device to calculate the location of the terminal to be positioned. According to the communication method provided by embodiments of the present application, the plurality of auxiliary terminals can participate in positioning a same terminal to be positioned, thereby improving the positioning precision for the terminal to be positioned.

No. of Pages : 79 No. of Claims : 27

(12) PATENT APPLICATION PUBLICATION
(21) Application No.202537098457 A
(19) INDIA
(22) Date of filing of Application :13/10/2025
(43) Publication Date : 07/11/2025

(54) Title of the invention : COMMUNICATION METHOD AND APPARATUS

(51) International classification :H04W 72/25
(31) Priority Document No :202310384427.5
(32) Priority Date :07/04/2023
(33) Name of priority country :China
(86) International Application No :PCT/CN2024/084059
Filing Date :27/03/2024
(87) International Publication No :WO 2024/208049
(61) Patent of Addition to Application Number :NA
Filing Date :NA
(62) Divisional to Application Number :NA
Filing Date :NA

(71)**Name of Applicant :**
1)HUAWEI TECHNOLOGIES CO., LTD.
Address of Applicant :Huawei Administration Building, Bantian, Longgang Shenzhen, Guangdong 518129 China
(72)**Name of Inventor :**
1)QI, Hong
2)ZHANG, Yi
3)YI, Feng
4)SU, Hongjia

(57) Abstract :
The present application provides a communication method and an apparatus, which can be used for resource sharing in channel occupancy time (COT) in sidelink communication. The method comprises: a first terminal apparatus determines a first COT; according to a preset priority threshold, the first terminal apparatus determines to share a first resource, a time domain position of the first resource being within the first COT, wherein the priority of data on the first resource is higher than or equal to the priority threshold; and the first terminal apparatus sends first indication information to at least one second terminal apparatus, the first indication information being used for sharing the first COT, and the first indication information comprising one or more of the priority threshold, resource information of the first COT, and shared authorization information of a PSFCH resource in the first COT. The method can realize COT sharing of unlicensed spectrum resources in a sidelink.

No. of Pages : 90 No. of Claims : 32

(12) PATENT APPLICATION PUBLICATION
(19) INDIA
(22) Date of filing of Application :13/10/2025
(21) Application No.202537098484 A
(43) Publication Date : 07/11/2025

(54) Title of the invention : BELLOWS PUMP FOR LIQUID METALS

(51) International classification	:F04B 43/08, F04B 43/00
(31) Priority Document No	:18/184023
(32) Priority Date	:15/03/2023
(33) Name of priority country	:U.S.A.
(86) International Application No	:PCT/US2024/019895
Filing Date	:14/03/2024
(87) International Publication No	:WO 2024/192225
(61) Patent of Addition to Application Number	:NA
Filing Date	:NA
(62) Divisional to Application Number	:NA
Filing Date	:NA

(71)**Name of Applicant :**
1)WESTINGHOUSE ELECTRIC COMPANY LLC
Address of Applicant :1000 Westinghouse Drive Suite 141 Cranberry Township, Pennsylvania 16066 U.S.A.
(72)**Name of Inventor :**
1)NESTOR, Christopher M.
2)LAPRESTI, Michael A.
3)LOJEK III, John

(57) Abstract :
According to various aspects, the present disclosure provides pumps for pumping a liquid metal, systems for filling a container with a liquid metal, and methods for filling a container with a liquid metal. According to at least one aspect, a pump can include an actuator including a drive rod, a first plate, a second plate, guide rods extending between the first plate and the second plate, a traveling stage, and a bellows. The traveling stage can be operatively coupled to the drive rod and can be slidable along the guide rods intermediate the first plate and the second plate. The bellows can extend between the second plate and the traveling stage to define a bellows chamber. The actuator can be configured to slide the traveling stage to expand and contract the bellows to pump the liquid.

No. of Pages : 24 No. of Claims : 20

(12) PATENT APPLICATION PUBLICATION
(21) Application No.202537098505 A
(19) INDIA
(22) Date of filing of Application :13/10/2025
(43) Publication Date : 07/11/2025

(54) Title of the invention : METHOD AND APPARATUS FOR MANUFACTURING ABSORBENT SHEET USED FOR ABSORBENT ARTICLE

(51) International classification	:A61F 13/15, A61F 13/534, A61F 13/535
(31) Priority Document No	:2023-055786
(32) Priority Date	:30/03/2023
(33) Name of priority country	:Japan
(86) International Application No	:PCT/JP2024/012498
Filing Date	:27/03/2024
(87) International Publication No	:WO 2024/204464
(61) Patent of Addition to Application Number	:NA
Filing Date	:NA
(62) Divisional to Application Number	:NA
Filing Date	:NA

(71)**Name of Applicant :**
1)ZUIKO CORPORATION
Address of Applicant :1-2, Saitohanada 2-chome, Ibaraki-shi, Osaka 5670082 Japan
(72)**Name of Inventor :**
1)IWAMURA Yosuke

(57) Abstract :
Provided are a method and an apparatus for manufacturing an absorbent sheet used for an absorbent article, with which it is possible to reduce the manufacturing cost of an absorbent sheet in which absorbent materials are arranged in two layers. A first continuous sheet (2) is wound around a first conveyance roll (12a) and conveyed, a first absorbent material (3) is supplied to the first continuous sheet (2) being conveyed, and a second continuous sheet (4) is overlapped onto the first continuous sheet (2) so as to cover the first absorbent material (3) to form a first composite sheet (7). The first composite sheet (7) is wound around a second conveyance roll (14a) and conveyed, a second absorbent material (5) is supplied to the first composite sheet (7) being conveyed, and a third continuous sheet (6) is overlapped onto the first composite sheet (7) so as to cover the second absorbent material (5) to form a second composite sheet (8). The second composite sheet (8) is compressed in the thickness direction to form an absorbent sheet (9).

No. of Pages : 33 No. of Claims : 18

(12) PATENT APPLICATION PUBLICATION
(21) Application No.202537098980 A
(19) INDIA
(22) Date of filing of Application :14/10/2025
(43) Publication Date : 07/11/2025

(54) Title of the invention : PEPTIDE WITH ACTIVITY OF PROMOTING HAIR GROWTH OR MITIGATING HAIR LOSS AND USE THEREOF

(51) International classification	:C07K 7/06, A61K 8/64, A61Q 5/00
(31) Priority Document No	:10-2023-0044927
(32) Priority Date	:05/04/2023
(33) Name of priority country	:Republic of Korea
(86) International Application No	:PCT/KR2024/004243
Filing Date	:02/04/2024
(87) International Publication No	:WO 2024/210460
(61) Patent of Addition to Application Number	:NA
Filing Date	:NA
(62) Divisional to Application Number	:NA
Filing Date	:NA

(71)**Name of Applicant :**
1)CAREGEN CO., LTD.
Address of Applicant :46-38, LS-ro 91beon-gil, Dongan-gu, Anyang-si, Gyeonggi-do 14119 Republic of Korea
(72)**Name of Inventor :**
1)CHUNG, Yong Ji
2)KIM, Eun Mi
3)LEE, Eung Ji

(57) Abstract :
The present application relates to a peptide with hair growth promoting activity and a use thereof, and provides: a peptide comprising the amino acid sequence of SEQ ID NO: 1; a cosmetic composition containing the peptide for promoting hair growth and mitigating hair loss; and a pharmaceutical composition containing the peptide for preventing or treating hair loss.

No. of Pages : 27 No. of Claims : 6

(12) PATENT APPLICATION PUBLICATION
(21) Application No.202537099067 A
(19) INDIA
(22) Date of filing of Application :14/10/2025
(43) Publication Date : 07/11/2025

(54) Title of the invention : CONTROL METHOD AND APPARATUS FOR AUTOMATIC CLEANING DEVICE, AND AUTOMATIC CLEANING DEVICE AND STORAGE MEDIUM

(51) International classification	:A47L 11/24, A47L 11/282, A47L 11/283, A47L 11/40
(31) Priority Document No	:202310267204.0
(32) Priority Date	:15/03/2023
(33) Name of priority country	:China
(86) International Application No	:PCT/CN2024/079868
Filing Date	:04/03/2024
(87) International Publication No	:WO 2024/188084
(61) Patent of Addition to Application Number	:NA
Filing Date	:NA
(62) Divisional to Application Number	:NA
Filing Date	:NA

(71)**Name of Applicant :**
1)BEIJING ROBOROCK INNOVATION TECHNOLOGY CO., LTD.
Address of Applicant :Room 1201, Floor 12, Building 3, Yard 17, Anju Road Changping District, Beijing 102206 China
(72)**Name of Inventor :**
1)SHAN, Jianqiang
2)WANG, Lei

(57) Abstract :
A control method and apparatus for an automatic cleaning device (100), and an automatic cleaning device (100) and a storage medium. The automatic cleaning device (100) comprises a body (101) and a cleaning assembly (1031) arranged on the rear of the body (101), wherein the cleaning assembly (1031) at least partially protrudes from an outer edge of the body (101). The control method comprises: in the process of an automatic cleaning device (100) changing directions after moving into a preset range of an obstacle (300), executing a supplemental cleaning action once after each time the automatic cleaning device (100) rotates by a preset angle, until the automatic cleaning device (100) completes direction changing, wherein supplemental cleaning actions comprise a backward action and a forward action (S401) The automatic cleaning device (100) executes a supplemental cleaning action during turning, thereby increasing the area of cleaning coverage, reducing a cleaning-missing region, and improving the cleaning effect of the automatic cleaning device (100).

No. of Pages : 23 No. of Claims : 15

(12) PATENT APPLICATION PUBLICATION
(21) Application No.202537099621 A
(19) INDIA
(22) Date of filing of Application :15/10/2025
(43) Publication Date : 07/11/2025

(54) Title of the invention : PEPTIDE WITH ACTIVITY OF PROMOTING HAIR GROWTH OR INHIBITING HAIR LOSS AND USE THEREOF

(51) International classification	:C07K 7/06, A61K 8/64, A61Q 5/00
(31) Priority Document No	:10-2023-0044928
(32) Priority Date	:05/04/2023
(33) Name of priority country	:Republic of Korea
(86) International Application No	:PCT/KR2024/004238
Filing Date	:02/04/2024
(87) International Publication No	:WO 2024/210457
(61) Patent of Addition to Application Number	:NA
Filing Date	:NA
(62) Divisional to Application Number	:NA
Filing Date	:NA

(71)**Name of Applicant :**
1)CAREGEN CO., LTD.
Address of Applicant :46-38, LS-ro 91beon-gil, Dongan-gu, Anyang-si, Gyeonggi-do 14119 Republic of Korea
(72)**Name of Inventor :**
1)CHUNG, Yong Ji
2)KIM, Eun Mi
3)LEE, Eung Ji

(57) Abstract :
The present application relates to a peptide with hair growth promoting activity and a use thereof, and provides a peptide comprising the amino acid sequence of SEQ ID NO: 1, a cosmetic composition containing the peptide for promoting hair growth and mitigating hair loss; and a pharmaceutical composition containing the peptide for preventing or treating hair loss.

No. of Pages : 22 No. of Claims : 6

(12) PATENT APPLICATION PUBLICATION
(21) Application No.202537099634 A
(19) INDIA
(22) Date of filing of Application :15/10/2025
(43) Publication Date : 07/11/2025

(54) Title of the invention : SELF-MOVING CLEANING DEVICE AND CONTROL METHOD AND APPARATUS THEREFOR, AND STORAGE MEDIUM

(51) International classification :A47L 11/24
(31) Priority Document No :202310269418.1
(32) Priority Date :15/03/2023
(33) Name of priority country :China
(86) International Application No :PCT/CN2024/079792
Filing Date :04/03/2024
(87) International Publication No :WO 2024/188080
(61) Patent of Addition to Application Number :NA
Filing Date :NA
(62) Divisional to Application Number :NA
Filing Date :NA

(71)**Name of Applicant :**
1)BEIJING ROBOROCK INNOVATION TECHNOLOGY CO., LTD.
Address of Applicant :Room 1201, Floor 12, Building 3, Yard 17, Anju Road Changping District, Beijing 102206 China
(72)**Name of Inventor :**
1)HOU, Zhengtao

(57) Abstract :
A self-moving cleaning device (100) and a control method and apparatus therefor, and a storage medium. The self-moving cleaning device (100) comprises a body (110) and cleaning elements (153) arranged at the bottom of the body (110), wherein at least part of each cleaning element (153) is located outside an edge projection area of the body (110). The control method comprises: determining a target interference area of the self-moving cleaning device (100) (S401); and on the basis of obstacle information in the target interference area, controlling the self-moving cleaning device (100) to move (S402).

No. of Pages : 47 No. of Claims : 18

(12) PATENT APPLICATION PUBLICATION
(21) Application No.202537099662 A
(19) INDIA
(22) Date of filing of Application :15/10/2025
(43) Publication Date : 07/11/2025

(54) Title of the invention : SELF-MOVING CLEANING DEVICE, CONTROL METHOD AND APPARATUS THEREFOR AND STORAGE MEDIUM

(51) International classification :A47L 11/24
(31) Priority Document No :202310252611.4
(32) Priority Date :15/03/2023
(33) Name of priority country :China
(86) International Application No :PCT/CN2024/079788
Filing Date :04/03/2024
(87) International Publication No :WO 2024/188079
(61) Patent of Addition to Application Number :NA
Filing Date :NA
(62) Divisional to Application Number :NA
Filing Date :NA

(71)**Name of Applicant :**
1)BEIJING ROBOROCK INNOVATION TECHNOLOGY CO., LTD.
Address of Applicant :Room 1201, Floor 12, Building 3, Yard 17, Anju Road Changping District, Beijing 102206 China
(72)**Name of Inventor :**
1)HOU, Zhengtao
2)LUO, Longyue

(57) Abstract :
A self-moving cleaning device (100), a control method and apparatus therefor, and a storage medium. The self-moving cleaning device (100) comprises a body (110) and a cleaning element (153) arranged at the bottom of the body (110), at least part of the cleaning element (153) being located outside an edge projection area of the body (110). The control method comprises: determining whether the self-moving cleaning device (100) is in a narrow area (S401); and, when the self-moving cleaning device (100) is in the narrow area, controlling the self-moving cleaning device (100) to execute an obstacle avoidance operation (S402).

No. of Pages : 47 No. of Claims : 16

(12) PATENT APPLICATION PUBLICATION
(21) Application No.202537100112 A
(19) INDIA
(22) Date of filing of Application :16/10/2025
(43) Publication Date : 07/11/2025

(54) Title of the invention : COMMUNICATION METHOD AND COMMUNICATION APPARATUS

(51) International classification	:H04L 5/00, H04W 72/0453
(31) Priority Document No	:202310411270.0
(32) Priority Date	:07/04/2023
(33) Name of priority country	:China
(86) International Application No	:PCT/CN2024/085879
Filing Date	:03/04/2024
(87) International Publication No	:WO 2024/208287
(61) Patent of Addition to Application Number	:NA
Filing Date	:NA
(62) Divisional to Application Number	:NA
Filing Date	:NA

(71)**Name of Applicant :**
1)HUAWEI TECHNOLOGIES CO., LTD.
Address of Applicant :Huawei Administration Building, Bantian, Longgang District Shenzhen, Guangdong 518129 China
(72)**Name of Inventor :**
1)GAO, Xiang
2)LIU, Xianda
3)ZHANG, Zhening
4)WANG, Yihong
5)LIU, Kunpeng

(57) Abstract :
The present application provides a communication method and a communication apparatus. In the communication method, ports for transmitting an SRS can be divided into P groups, the SRS can be transmitted according to at least one comb offset in a first comb offset set corresponding to the p-th group of ports among the P groups of ports, and different port groups can correspond to different comb offset sets. In this way, the CO step sizes by which the ports in different port groups can hop can be different, so that the probability of CO repetition with the ports of a UE incapable of CO hopping can be reduced, thereby reducing the interference of transmitting the SRS.

No. of Pages : 186 No. of Claims : 14

(12) PATENT APPLICATION PUBLICATION
(21) Application No.202537100300 A
(19) INDIA
(22) Date of filing of Application :16/10/2025
(43) Publication Date : 07/11/2025

(54) Title of the invention : AQUEOUS METHODS OF MACRO-PARTICLE MANUFACTURING

(51) International classification	:H01M 4/04, H01M 4/131, H01M 4/1391, H01M 4/36, H01M 4/62
(31) Priority Document No	:18/123305
(32) Priority Date	:19/03/2023
(33) Name of priority country	:U.S.A.
(86) International Application No	:PCT/US2024/020473
Filing Date	:18/03/2024
(87) International Publication No	:WO 2024/196900
(61) Patent of Addition to Application Number	:NA
Filing Date	:NA
(62) Divisional to Application Number	:NA
Filing Date	:NA

(71)**Name of Applicant :**
1)PIXION BATTERIES, INC.
Address of Applicant :PO Box 16276 Austin, Texas 78761 U.S.A.
(72)**Name of Inventor :**
1)DEVARAJ, Vikram
2)DEVARAJ, Varun

(57) Abstract :
A powder mixture including a plurality of particle agglomerations. Each of the plurality of particle agglomerations includes one or more conductor-speckled active material particles held together by electrostatic forces, with each of the conductor-speckled active material particles including a plurality of conductive particles in electrical contact with an active material particle. In various embodiments, the active material particle includes an anode electroactive material or a cathode electroactive material. A mixture of binder particulates is interspersed between the conductor-speckled active material particles. The mixture of binder particulates remain below a softening temperature at which constituent particles of the mixture of binder particulates become pliable and begin agglomerating together. The powder mixture includes less than 3 percent by weight of the mixture of binder particulates.

No. of Pages : 32 No. of Claims : 15

(12) PATENT APPLICATION PUBLICATION
(21) Application No.202537100318 A
(19) INDIA
(22) Date of filing of Application :16/10/2025
(43) Publication Date : 07/11/2025

(54) Title of the invention : PHOTOCHROMIC COMPOUND, PROPARGYL ALCOHOL COMPOUND, CURABLE COMPOSITION, OPTICAL ARTICLE, LENS, AND SPECTACLES

(51) International classification	:C07D 311/04, C07C 217/76, C07C 217/94, C07D 311/78, C07D 405/04	
(31) Priority Document No	:2023-049959	
(32) Priority Date	:27/03/2023	
(33) Name of priority country	:Japan	
(86) International Application No	:PCT/JP2023/024970	
Filing Date	:05/07/2023	
(87) International Publication No	:WO 2024/202087	
(61) Patent of Addition to Application Number	:NA	
Filing Date	:NA	
(62) Divisional to Application Number	:NA	
Filing Date	:NA	

(71)**Name of Applicant :**
1)TOKUYAMA CORPORATION
Address of Applicant :1-1, Mikage-cho, Shunan-shi, Yamaguchi 7458648 Japan
(72)**Name of Inventor :**
1)MIYAZAKI Masayuki

(57) Abstract :
The purpose of the present invention is to provide: a photochromic compound having an excellent color fading rate and excellent durability; a propargyl alcohol compound that can serve as an intermediate for this photochromic compound; and a curable composition, an optical article, a lens, and spectacles each including this photochromic compound. Provided according to embodiments is a photochromic compound having a skeleton represented by formula (1). In formula (1), R3 is an aryl group or a heteroaryl group substituted with a group represented by formula (1a). In formula (1a), R1 is a substituted or unsubstituted aryl group, a substituted or unsubstituted heteroaryl group, or a substituted or unsubstituted fused polycycle in which an aromatic ring or an aromatic heterocycle has been fused to these substituents. R2 is a hydrogen atom, a halogen atom, a substituted or unsubstituted alkyl group, a substituted or unsubstituted haloalkyl group, a substituted or unsubstituted cycloalkyl group, a group represented by formula (2a), or the like.

No. of Pages : 168 No. of Claims : 21

(12) PATENT APPLICATION PUBLICATION
(21) Application No.202537100605 A
(19) INDIA
(22) Date of filing of Application :17/10/2025
(43) Publication Date : 07/11/2025

(54) Title of the invention : ANGLE SENSOR AND ROTARY APPARATUS

(51) International classification :G01D 5/20
(31) Priority Document No :2023-074933
(32) Priority Date :28/04/2023
(33) Name of priority country :Japan
(86) International Application No :PCT/JP2023/032931
Filing Date :08/09/2023
(87) International Publication No :WO 2024/224658
(61) Patent of Addition to Application Number :NA
Filing Date :NA
(62) Divisional to Application Number :NA
Filing Date :NA

(71)**Name of Applicant :**
1)MINEBEA MITSUMI INC.
Address of Applicant :4106-73 Oaza Miyota, Miyota-machi, Kitasaku-gun Nagano 3890293 Japan
(72)**Name of Inventor :**
1)OCHIAI Takaaki
2)FUJITA Kazuhiko
3)SHINKAI Taishi
4)NONOMURA Mitsumasa

(57) Abstract :
This angle sensor 1 comprises a rotor 2 and a stator 3. The rotor 2 has a cylinder 10 and a plurality of metal bodies 20 fixed to the cylinder 10. The stator 3 has a plurality of coils 30 arranged in the circumferential direction of the cylinder 10. The rotor 2 and the stator 3 face each other in the radial direction of the cylinder 10.

No. of Pages : 35 No. of Claims : 18

(12) PATENT APPLICATION PUBLICATION
(21) Application No.202537100683 A
(19) INDIA
(22) Date of filing of Application :17/10/2025
(43) Publication Date : 07/11/2025

(54) Title of the invention : INTERACTION METHOD AND SMART WATCH

(51) International classification	:G06F 3/01	
(31) Priority Document No	:202310970204.7	
(32) Priority Date	:02/08/2023	
(33) Name of priority country	:China	
(86) International Application No	:PCT/CN2024/101179	
Filing Date	:25/06/2024	
(87) International Publication No	:WO 2025/025909	
(61) Patent of Addition to Application Number	:NA	
Filing Date	:NA	
(62) Divisional to Application Number	:NA	
Filing Date	:NA	

(71)**Name of Applicant :**
1)HUAWEI TECHNOLOGIES CO., LTD.
Address of Applicant :Huawei Administration Building, Bantian, Longgang Shenzhen, Guangdong 518129 China
(72)**Name of Inventor :**
1)WU, Yu
2)LUO, Long
3)HAN, Yi

(57) Abstract :
The present application provides an interaction method and a smart watch. The method comprises: displaying a dial interface, the dial interface comprising a first object and a first control; in response to a first operation of the user for the first control, controlling the first object to move forward; detecting the operation of the user rotating a crown, and determining a rotation direction; when the rotation direction is a first direction, in response to the operation of the user rotating the crown, controlling the first object to move forward while causing the first object to move left; and when the rotation direction is a second direction, in response to the operation of the user rotating the crown, controlling the first object to move forward while causing the first object to move right. The smart watch of the present application can display on the dial interface the object capable of interacting with the user, and when the user rotates the crown, on the basis of the operation of the user rotating the crown, the smart watch can control the object in the dial interface to interact with the user, so that the interaction between the smart watch and the user can be enhanced, interestingness is enhanced, and user experience can be improved.

No. of Pages : 49 No. of Claims : 26

(12) PATENT APPLICATION PUBLICATION
(21) Application No.202537100708 A
(19) INDIA
(22) Date of filing of Application :17/10/2025
(43) Publication Date : 07/11/2025

(54) Title of the invention : PHOTOCHROMIC COMPOUND, NAPHTHOL DERIVATIVE, CURABLE COMPOSITION, OPTICAL ARTICLE, LENS, AND EYEGLASS

(51) International classification	:C07D 311/04, C07C 217/76, C07C 217/94, C07D 311/78, C07D 405/04
(31) Priority Document No	:2023-049959
(32) Priority Date	:27/03/2023
(33) Name of priority country	:Japan
(86) International Application No	:PCT/JP2023/024969
Filing Date	:05/07/2023
(87) International Publication No	:WO 2024/202086
(61) Patent of Addition to Application Number	:NA
Filing Date	:NA
(62) Divisional to Application Number	:NA
Filing Date	:NA

(71)**Name of Applicant :**
1)TOKUYAMA CORPORATION
Address of Applicant :1-1, Mikage-cho, Shunan-shi, Yamaguchi 7458648 Japan
(72)**Name of Inventor :**
1)MIYAZAKI Masayuki

(57) Abstract :
The purpose of the present invention is to provide: a photochromic compound having excellent temperature dependency and an excellent color fading rate; a naphthol derivative that can be an intermediate for the photochromic compound; and a curable composition, an optical article, a lens, and an eyeglass each including the photochromic compound. An embodiment of the present invention provides a photochromic compound having a skeleton represented by formula (1). In formula (1), M is C, Si, or Ge. Ring A is a substituted or unsubstituted aromatic ring, a substituted or unsubstituted aromatic heterocyclic ring, or a substituted or unsubstituted condensed polycyclic ring in which an aromatic ring or an aromatic heterocyclic ring and the substituted or unsubstituted aromatic ring or the substituted or unsubstituted aromatic heterocyclic ring are condensed. Z1 is a group represented by formula (1a) or a group represented by formula (1b).

No. of Pages : 238 No. of Claims : 17

(12) PATENT APPLICATION PUBLICATION
(21) Application No.202537101016 A
(19) INDIA
(22) Date of filing of Application :18/10/2025
(43) Publication Date : 07/11/2025

(54) Title of the invention : SYSTEMS AND METHODS FOR LITHIUM-ION BATTERY DURABILITY

(51) International classification	:H01M 10/058, H01M 50/204, H01M 10/04, H01M 50/20, H01M 50/249
(31) Priority Document No	:18/330523
(32) Priority Date	:07/06/2023
(33) Name of priority country	:U.S.A.
(86) International Application No	:PCT/US2024/032345
Filing Date	:04/06/2024
(87) International Publication No	:WO 2024/254029
(61) Patent of Addition to Application Number	:NA
Filing Date	:NA
(62) Divisional to Application Number	:NA
Filing Date	:NA

(71)**Name of Applicant :**
1)THE NOCO COMPANY
Address of Applicant :30339 Diamond Parkway, #102 Glenwillow, OH 44139 U.S.A.
(72)**Name of Inventor :**
1)MCBRIDE, James P.
2)WALK, Christopher Stephen
3)BOSWAY, Matthew Michael
4)BARRETT, Timothy Joseph
5)REARDON, John Charles

(57) Abstract :
A battery configured to have improved thermal management and structural stability. The battery including a battery pack construction with at least one battery cell spacer having a first surface contacting substantially all of the bottom surface of a first battery cell and a second surface contacting substantially all of the top surface of a second battery cell, the battery cell spacer including an adhesive component. Additionally, the battery may include a battery management system (BMS) in electrical communication with the first and second battery cells, the BMS having one or more thermal components configured to disperse heat from the BMS, and a thermal epoxy contacting the one or more thermal components and a battery housing. The battery further including a stability cage at least partially enclosing the battery pack construction and positioned between the battery cells and the battery housing.

No. of Pages : 22 No. of Claims : 43

(12) PATENT APPLICATION PUBLICATION
(21) Application No.202537101757 A
(19) INDIA
(22) Date of filing of Application :22/10/2025
(43) Publication Date : 07/11/2025

(54) Title of the invention : THREE-ROW ROLLER BEARING, PREFERABLY FOR USE IN A WIND POWER PLANT

(51) International classification	:F16C 19/38, F16C 33/58, F16C 33/60, F16C 19/56, F16C 33/66
(31) Priority Document No	:23172127.5
(32) Priority Date	:08/05/2023
(33) Name of priority country	:EPO
(86) International Application No	:PCT/EP2024/062472
Filing Date	:06/05/2024
(87) International Publication No	:WO 2024/231352
(61) Patent of Addition to Application Number	:NA
Filing Date	:NA
(62) Divisional to Application Number	:NA
Filing Date	:NA

(71)**Name of Applicant :**
1)THYSSENKRUPP AG
Address of Applicant :ThyssenKrupp Allee 1 45143 Essen Germany
2)DEFONTAINE SAS
(72)**Name of Inventor :**
1)JACQUEMONT, Eric
2)DEUDÉ, Olivier
3)HABARY, Laurent
4)GUERIN, Bertrand

(57) Abstract :
The present invention relates to a three-row roller bearing (100), preferably for use in a wind power plant (200), with an outer ring (1) and a two-piece inner ring (2, 3), the outer ring (1) and the inner ring (2, 3) being rotatable relative to each other about an axis of rotation (A), wherein the bearing (100) has a hub side (1a) via which the bearing (100) can be connected to a hub, and a rotor blade side (3c) via which the bearing (100) can be connected to a rotor blade (7), wherein the inner ring (2, 3) comprises a rotor blade side inner ring (3), a hub side inner ring (2) and an internal bearing gear (2a), wherein the rotor blade side inner ring (3) comprises the internal bearing gear (2a).

No. of Pages : 9 No. of Claims : 10

(12) PATENT APPLICATION PUBLICATION
(21) Application No.202537101934 A
(19) INDIA
(22) Date of filing of Application :23/10/2025
(43) Publication Date : 07/11/2025

(54) Title of the invention : COMMUNICATION METHOD AND COMMUNICATION APPARATUS

(51) International classification :H04W 72/23
(31) Priority Document No :202310411107.4
(32) Priority Date :07/04/2023
(33) Name of priority country :China
(86) International Application No :PCT/CN2024/085926
Filing Date :03/04/2024
(87) International Publication No :WO 2024/208299
(61) Patent of Addition to Application Number :NA
Filing Date :NA
(62) Divisional to Application Number :NA
Filing Date :NA

(71)**Name of Applicant :**
1)HUAWEI TECHNOLOGIES CO., LTD.
Address of Applicant :Huawei Administration Building, Bantian, Longgang Shenzhen, Guangdong 518129 China
(72)**Name of Inventor :**
1)HOU, Hailong
2)GUO, Zhiheng
3)LU, Shaozhong
4)SONG, Xinghua

(57) Abstract :
Embodiments of the present application provide a communication method and a communication apparatus. The method is applied to a network device, and the method comprises: sending configuration information to a terminal device, the configuration information indicating M sounding reference signal (SRS) resource sets, the M SRS resource sets comprising X first SRS resource sets and Y second SRS resource sets, the X first SRS resource sets comprising at least one first SRS resource, the Y second SRS resource sets comprising at least one second SRS resource, a time domain resource corresponding to the at least one first SRS resource being a sub-band full-duplex (SBFD) type time unit, and a time domain resource corresponding to the at least one second SRS resource being a non-SBFD type time unit; and receiving, according to the configuration information, an SRS from the terminal device. The solution of the present application can improve the performance of SRS transmission.

No. of Pages : 77 No. of Claims : 26

(12) PATENT APPLICATION PUBLICATION
(21) Application No.202537101971 A
(19) INDIA
(22) Date of filing of Application :23/10/2025
(43) Publication Date : 07/11/2025

(54) Title of the invention : COMMUNICATION METHOD AND COMMUNICATION APPARATUS

(51) International classification :H04W 12/106
(31) Priority Document No :202310385227.1
(32) Priority Date :07/04/2023
(33) Name of priority country :China
(86) International Application No :PCT/CN2024/085458
Filing Date :02/04/2024
(87) International Publication No :WO 2024/208178
(61) Patent of Addition to Application Number :NA
Filing Date :NA
(62) Divisional to Application Number :NA
Filing Date :NA

(71)**Name of Applicant :**
1)HUAWEI TECHNOLOGIES CO., LTD.
Address of Applicant :Huawei Administration Building, Bantian, Longgang Shenzhen, Guangdong 518129 China
(72)**Name of Inventor :**
1)GUO, Longhua
2)LEI, Ao
3)WU, Rong
4)ZHOU, Runze

(57) Abstract :
Provided in the embodiments of the present application are a communication method and apparatus. The method comprises: a first communication apparatus acquiring a security policy corresponding to a proximity service group; determining, according to the security policy, whether to perform security protection on a load field, which is carried in a first message, and performing assignment on other fields in the first message than the load field; and sending the first message to a second communication apparatus, wherein the other fields comprise at least one of the following: an identifier of a proximity service group key, an identifier of a proximity service group transmission key, a freshness parameter, confidentiality indication information, integrity indication information or a message authentication code, the confidentiality indication information indicates whether confidentiality security protection is enabled, the integrity indication information is used for indicating whether integrity security protection is enabled, and the first communication apparatus is one of at least two members in the proximity service group. By means of the technical solution of the present application, a second communication apparatus can be prevented from being cheated, thereby reducing potential security risks.

No. of Pages : 102 No. of Claims : 29

(12) PATENT APPLICATION PUBLICATION
(21) Application No.202537102212 A
(19) INDIA
(22) Date of filing of Application :23/10/2025
(43) Publication Date : 07/11/2025

(54) Title of the invention : ADHESIVE COMPOSITION, CURED BODY, LAMINATE, OPTICAL ARTICLE, LENS, AND SPECTACLES

(51) International classification	:C09J 175/04, B32B 27/00, B32B 27/40, C08G 18/10, C08G 18/44
(31) Priority Document No	:2023-065260
(32) Priority Date	:12/04/2023
(33) Name of priority country	:Japan
(86) International Application No	:PCT/JP2024/014532
Filing Date	:10/04/2024
(87) International Publication No	:WO 2024/214739
(61) Patent of Addition to Application Number	:NA
Filing Date	:NA
(62) Divisional to Application Number	:NA
Filing Date	:NA

(71)**Name of Applicant :**
1)TOKUYAMA CORPORATION
Address of Applicant :1-1, Mikage-cho, Shunan-shi, Yamaguchi 7458648 Japan
(72)**Name of Inventor :**
1)GOTO Kenta
2)SHIMIZU Yasutomo
3)HIRAREN Toshimitsu
4)KAWASHIMA Takahiro
5)MORIMOTO Miki

(57) Abstract :
The purpose of the present disclosure is to provide an adhesive composition enabling the formation of an adhesive layer having excellent functionality, a cured body thereof, a laminate, an optical article, a lens, and spectacles. One embodiment of the present invention provides an adhesive composition. The adhesive composition contains a polyurethane urea resin and an organic solvent. The polyurethane urea resin has a urea bond, a urethane bond, and a structure represented by formula (I). In formula (I), R1 and R2 are each independently a linear alkylene group having 3 or more and 10 or less carbon atoms. l is 0 or 1 or more and 25 or less. n and m are each independently 2 or more and 70 or less.

No. of Pages : 53 No. of Claims : 17

(12) PATENT APPLICATION PUBLICATION
(21) Application No.202537102614 A
(19) INDIA
(22) Date of filing of Application :24/10/2025
(43) Publication Date : 07/11/2025

(54) Title of the invention : A SOLID DISINFECTION COMPOSITION

(51) International classification	:C11D 1/10, C11D 1/62, C11D 1/65, C11D 3/00, C11D 3/48
(31) Priority Document No	:23170777.9
(32) Priority Date	:28/04/2023
(33) Name of priority country	:EPO
(86) International Application No	:PCT/EP2024/058761
Filing Date	:29/03/2024
(87) International Publication No	:WO 2024/223227
(61) Patent of Addition to Application Number	:NA
Filing Date	:NA
(62) Divisional to Application Number	:NA
Filing Date	:NA

(71)**Name of Applicant :**
1)UNILEVER GLOBAL IP LIMITED
Address of Applicant :Port Sunlight Wirral Merseyside CH62 4ZD U.K.
(72)**Name of Inventor :**
1)APPAVOO, Shanthi
2)HALDER, Anindita
3)MAHAPATRA, Samiran
4)TRIVEDI, Vishal, Kumar

(57) Abstract :
The present invention relates to a solid cleaning composition in tablet form that delivers antimicrobial efficacy against both gram positive and gram negative bacteria. The composition is useful in disinfection of hard surfaces like those in toilets, kitchen sink, and dish wash machines; as well as in disinfecting fabrics. This is achieved at low concentration of cationic surfactant the efficacy of which is boosted with amino acid based surfactant in a tablet comprising an effervescent system.

No. of Pages : 12 No. of Claims : 11

(12) PATENT APPLICATION PUBLICATION
(21) Application No.202537102615 A
(19) INDIA
(22) Date of filing of Application :24/10/2025
(43) Publication Date : 07/11/2025

(54) Title of the invention : COMPOSITIONS

(51) International classification	:C08G 64/02, C08G 64/18, C08G 65/26, C08G 65/32, C09K 23/00
(31) Priority Document No	:23169773.1
(32) Priority Date	:25/04/2023
(33) Name of priority country	:EPO
(86) International Application No	:PCT/EP2024/061139
Filing Date	:23/04/2024
(87) International Publication No	:WO 2024/223596
(61) Patent of Addition to Application Number	:NA
Filing Date	:NA
(62) Divisional to Application Number	:NA
Filing Date	:NA

(71)**Name of Applicant :**
1)UNILEVER GLOBAL IP LIMITED
Address of Applicant :Port Sunlight Wirral Merseyside CH62 4ZD U.K.
(72)**Name of Inventor :**
1)BLACKBURN, Anthea Katrina
2)CROSSMAN, Martin Charles
3)KEMBER, Michael Richard
4)WINTER, Jeremy Nicholas

(57) Abstract :
The invention concerns a composition comprising a polycarbonate block polyether of the formula I Z1-(PC)P-(PE)Q-Z2.....(I) wherein PC represents a carbonate block with P repeat units of formula wherein Re1, Re2, Re3, and Re4 are independently selected from H, methyl, ethyl, propyl, butyl, or an ether, ester or carbonate group, with the proviso that when one of Re1, Re2, Re3, and Re4 is methyl, ethyl, propyl, butyl, or an ether, ester or carbonate group, the remaining Re1, Re2, Re3, and Re4 are H.; PE represents a polyether block with Q repeat units of formula wherein Re1', Re2', Re3', and Re4' are independently selected from H, methyl, ethyl, propyl, butyl, or an ether, ester or carbonate groups, with the proviso that when one of Re1, Re2, Re3, and Re4 is methyl, ethyl, propyl, butyl, or an ether, ester or carbonate group, the remaining Re1', Re2', Re3', and Re4' are H; Z1 is R, R-O, R-C(O)-O- or R-O-C(O)-O; R is an optionally substituted straight or branched chain C1-C11 alkyl group; Z2 is H, R, R-(O)C or R-O-(O)C; and wherein the value of P is greater than the value of Q.

No. of Pages : 27 No. of Claims : 17

(12) PATENT APPLICATION PUBLICATION
(21) Application No.202537103166 A
(19) INDIA
(22) Date of filing of Application :27/10/2025
(43) Publication Date : 07/11/2025

(54) Title of the invention : WIRELESS COMMUNICATION METHOD AND COMMUNICATION APPARATUS

(51) International classification :H04W 28/06
(31) Priority Document No :202310436714.6
(32) Priority Date :19/04/2023
(33) Name of priority country :China
(86) International Application No :PCT/CN2024/087700
Filing Date :15/04/2024
(87) International Publication No :WO 2024/217370
(61) Patent of Addition to Application Number :NA
Filing Date :NA
(62) Divisional to Application Number :NA
Filing Date :NA

(71)**Name of Applicant :**
1)HUAWEI TECHNOLOGIES CO., LTD.
Address of Applicant :Huawei Administration Building, Bantian, Longgang Shenzhen, Guangdong 518129 China
(72)**Name of Inventor :**
1)GUO, Yuchen
2)HUANG, Guogang
3)LI, Yunbo
4)GAN, Ming

(57) Abstract :
The present application provides a wireless communication method and a communication apparatus, which are applied to wireless local area network systems supporting IEEE 802.11ax next-generation Wi-Fi protocols such as 802.11be and Wi-Fi 7, and 802.11be next-generation protocols such Wi-Fi 8 and other series of protocols, and can also be applied to ultra wideband-based wireless personal area network systems. The method comprises: an access point 1 generates and sends a radio frame, wherein the radio frame comprises a multiple basic service set identifier element and a target wake time element located outside the multiple basic service set identifier element, the target wake time element comprises a restricted target wake time parameter of an access point 2 and identifier information of the access point 2, and the multiple basic service set identifier element corresponds to a multiple basic service set identifier set to which the access point 1 and the access point 2 belong. Carrying the identifier information of the access point 2 facilitates a station determining that the restricted target wake time parameter belongs to the access point 2.

No. of Pages : 67 No. of Claims : 40

(12) PATENT APPLICATION PUBLICATION
(21) Application No.202537103190 A
(19) INDIA
(22) Date of filing of Application :27/10/2025
(43) Publication Date : 07/11/2025

(54) Title of the invention : CONTROL METHOD, CONTROL APPARATUS, AND INTELLIGENT DRIVING DEVICE

(51) International classification	:B60W 30/06, B60W 60/00, B60W 40/02, B60W 50/08, G08G 1/14
(31) Priority Document No	:202310416934.2
(32) Priority Date	:14/04/2023
(33) Name of priority country	:China
(86) International Application No	:PCT/CN2024/072328
Filing Date	:15/01/2024
(87) International Publication No	:WO 2024/212643
(61) Patent of Addition to Application Number	:NA
Filing Date	:NA
(62) Divisional to Application Number	:NA
Filing Date	:NA

(71)**Name of Applicant :**
1)SHENZHEN YINWANG INTELLIGENT TECHNOLOGIES CO., LTD.
Address of Applicant :Room101, Building A1, No.1, Jingyue Road Jiulongshan Community, Fucheng Street, Longhua District Shenzhen, Guangdong 518110 China
(72)**Name of Inventor :**
1)QIN, Cai
2)SHEN, Yujie
3)XU, Ting

(57) Abstract :
A control method, a control apparatus, and an intelligent driving device. The method comprises: receiving a first instruction, and according to the first instruction, controlling a first interface to display a first icon, wherein the first icon indicates a first boundary and a second boundary of a target region for an intelligent driving device; and according to the first icon, controlling the intelligent driving device to travel to the target region from the first boundary or the second boundary. The method can be applied to intelligent vehicles or electric vehicles, and can improve the passage efficiency and safety of vehicles, thereby improving the success rate and efficiency of auto parking, thus improving the usage experience of a user.

No. of Pages : 39 No. of Claims : 22

(12) PATENT APPLICATION PUBLICATION
(21) Application No.202537103231 A
(19) INDIA
(22) Date of filing of Application :27/10/2025
(43) Publication Date : 07/11/2025

(54) Title of the invention : SELF-MOVING DEVICE AND CONTROL METHOD THEREFOR, STORAGE MEDIUM, AND COMPUTER DEVICE

(51) International classification :A47L 11/24
(31) Priority Document No :202310305786.7
(32) Priority Date :27/03/2023
(33) Name of priority country :China
(86) International Application No :PCT/CN2024/079854
Filing Date :04/03/2024
(87) International Publication No :WO 2024/198842
(61) Patent of Addition to Application Number :NA
Filing Date :NA
(62) Divisional to Application Number :NA
Filing Date :NA

(71)**Name of Applicant :**
1)BEIJING ROBOROCK INNOVATION TECHNOLOGY CO., LTD.
Address of Applicant :Room 1201, Floor 12, Building 3, Yard 17, Anju Road Changping District, Beijing 102206 China
(72)**Name of Inventor :**
1)YAN, Baoguang

(57) Abstract :
A self-moving device (100) and a control method therefor, a storage medium, and a computer device. The self-moving device (100) comprises a camera module (123), a first processor (180), and a second processor (190), wherein the camera module (123) is used for acquiring an image signal of a surrounding environment of the self-moving device (100) and sending the image signal to the first processor (180); the first processor (180) is used for receiving the image signal and establishing a surrounding environment map of the self-moving device (100) and/or identifying an obstacle in the surrounding environment of the self-moving device (100) according to the image signal; and the second processor (190) is used for controlling the connection/disconnection between the first processor (180) and the camera module (123) according to the operation state of the self-moving device (100), so as to control whether the first processor (180) can receive the image signal sent by the camera module (123). Therefore, the connection/disconnection between the first processor (180) and the camera module (123) matches the operation state of the self-moving device (100), so that the risk of privacy exposure of a user by the camera module (123) is reduced, thereby improving the use security of the device.

No. of Pages : 32 No. of Claims : 11

(12) PATENT APPLICATION PUBLICATION
(21) Application No.202537103688 A
(19) INDIA
(22) Date of filing of Application :28/10/2025
(43) Publication Date : 07/11/2025

(54) Title of the invention : METHOD FOR USE IN CALL, DEVICE, CHIP SYSTEM, AND STORAGE MEDIUM

(51) International classification	:H04W 28/04, H04W 76/27, H04L 1/00
(31) Priority Document No	:202310392810.5
(32) Priority Date	:05/04/2023
(33) Name of priority country	:China
(86) International Application No	:PCT/CN2023/132198
Filing Date	:17/11/2023
(87) International Publication No	:WO 2024/207745
(61) Patent of Addition to Application Number	:NA
Filing Date	:NA
(62) Divisional to Application Number	:NA
Filing Date	:NA

(71)**Name of Applicant :**
1)HONOR DEVICE CO., LTD.
Address of Applicant :Suite 3401, Unit A, Building 6, Shum Yip Sky Park No. 8089 Hongli West Road, Xiangmihu Street Futian District, Shenzhen, Guangdong 518040 China
(72)**Name of Inventor :**
1)LI, Haibo

(57) Abstract :
The present application provides a method for use in a call, a device, a chip system, and a storage medium. The method is applied to a terminal device. First information in a first RRC reconfiguration message currently received from a first cell, and a first parameter and a value corresponding to the first parameter in a locally stored first configuration item are verified, and an abnormal value corresponding to the first parameter is ignored when the value corresponding to the first parameter is abnormal, so that the first RRC reconfiguration message is successfully verified, thereby ensuring that the terminal device can complete RRC reconfiguration, and reducing the probability of RRC reconfiguration failure.

No. of Pages : 71 No. of Claims : 18

(12) PATENT APPLICATION PUBLICATION
(21) Application No.202538097540 A
(19) INDIA
(22) Date of filing of Application :09/10/2025
(43) Publication Date : 07/11/2025

(54) Title of the invention : METHOD, DEVICE AND SECURE ELEMENT FOR CONDUCTING A SECURED FINANCIAL TRANSACTION ON A DEVICE

(51) International classification	:G06Q 20/40, G06Q 20/16, G06Q 20/32, G06Q 20/34
(31) Priority Document No	:61/604,613
(32) Priority Date	:29/02/2012
(33) Name of priority country	:U.S.A.
(86) International Application No	:PCT/CA2013/000185
Filing Date	:28/02/2013
(87) International Publication No	: NA
(61) Patent of Addition to Application Number	:NA
Filing Date	:NA
(62) Divisional to Application Number	:202338058571
Filed on	:31/08/2023

(71)**Name of Applicant :**
1)APPLE INC.
Address of Applicant :One Apple Park Way Cupertino, California 95014, United States of America U.S.A.
(72)**Name of Inventor :**
1)FONTAINE, Sebastien
2)DOLCINO, Luc
3)DU HAYS, Benjamin
4)DE NANCLAS, Maxime
5)ALBERTI, Xavier

(57) Abstract :
ABSTRACT METHOD, DEVICE AND SECURE ELEMENT FOR CONDUCTING A SECURED FINANCIAL TRANSACTION ON A DEVICE A device and a secure element for conducting a secured financial transaction are disclosed. The device comprises a central processing unit; a communication interface 5 for establishing a communication between the device and a financial institution related to a financial account; an interface for acquiring data relating to the financial account; the secure element for processing at least a portion of the data relating to the financial account acquired by the interface; and control logic for acquiring a purchase amount to be debited from the financial 10 account and for obtaining a transaction authorization from the financial institution related to the financial account, the transaction authorization being based, at least partially, on data processed solely by the secure element independently of data processed by the central processing unit. A method of conducting the secured financial transaction, and a computer program product for execution by the secure element are also disclosed.

No. of Pages : 54 No. of Claims : 28

CONTINUED TO PART- 3