CONTINUED FROM PART- 1

Publication After 18 Months:

The following Patent Applications have been published under Section 11A (3) of The Patents (Amendment) Act, 2005. Any Person may file representation by way of opposition to the Controller of Patents at the appropriate office against the grant of the patent in the prescribed manner under section 25(1) of the Patents (Amendment) Act, 2005 read with the rule 55 of The Patents (Amendment) Rules, 2006:

(12) PATENT APPLICATION PUBLICATION
(21) Application No.202411025485 A
(19) INDIA
(22) Date of filing of Application :28/03/2024
(43) Publication Date : 14/11/2025

(54) Title of the invention : SURFACE CLEANING ASSISTIVE DEVICE

(51) International classification	:G06Q0010100000, A45F0005000000, G02B0021360000, G06F0003042000, G01B0011250000	(71)**Name of Applicant :** **1)Chandigarh Group of Colleges** Address of Applicant :Landran Kharar Banur Highway, Sector 112, Sahibzada Ajit Singh Nagar, Landran, Mohali, Punjab-140307, India. Mohali Punjab India
(31) Priority Document No	:NA	(72)**Name of Inventor :**
(32) Priority Date	:NA	**1)Dr. Chamkaur Singh**
(33) Name of priority country	:NA	**2)Dr. Chhinder Kaur**
(86) International Application No	:NA	**3)Shivam**
Filing Date	:NA	**4)Vishal Thakur**
(87) International Publication No	: NA	
(61) Patent of Addition to Application Number	:NA	
Filing Date	:NA	
(62) Divisional to Application Number	:NA	
Filing Date	:NA	

(57) Abstract :
A surface cleaning assistive device comprising of a cuboidal body 1 attached with a pair of straps 3 to be strapped around the shoulders of a user to secure the body 1 with back portion of the user, a touch enabled screen 2 for enabling a user to give input commands for cleaning a fixed surface, an artificial intelligence-based imaging unit 6 to detect exact location of stains on the surface, a laser projection unit 7 to project a laser beam to guide the user in aligning ring 4 over the stains, multiple electronic nozzles 12 to dispense the cleaning solution, a motorized brush for removing the stains, multiple electronic valves 9 to rinse the surface, a color sensor for detecting the stains, and a tactile sensor for detecting hardness of the surface.

No. of Pages : 18 No. of Claims : 6

(12) PATENT APPLICATION PUBLICATION
(21) Application No.202411025486 A
(19) INDIA
(22) Date of filing of Application :28/03/2024
(43) Publication Date : 14/11/2025

(54) Title of the invention : AUTOMATED UTENSIL MAINTENANCE DEVICE

(51) International classification	:B25J0019000000, B25J0005000000, B25J0019020000, B25J0015000000, A61B0046100000
(31) Priority Document No	:NA
(32) Priority Date	:NA
(33) Name of priority country	:NA
(86) International Application No	:NA
Filing Date	:NA
(87) International Publication No	: NA
(61) Patent of Addition to Application Number	:NA
Filing Date	:NA
(62) Divisional to Application Number	:NA
Filing Date	:NA

(71)**Name of Applicant :**
1)Chandigarh Group of Colleges
Address of Applicant :Landran Kharar Banur Highway, Sector 112, Sahibzada Ajit Singh Nagar, Landran, Mohali, Punjab-140307, India. Mohali Punjab India
(72)**Name of Inventor :**
1)Dr. Tejinder Pal Singh Brar
2)Anuradha Saini
3)Rajneesh Singh
4)Abhishek Thakur

(57) Abstract :
An automated utensil maintenance device, comprising a platform 1 positioned over a fixed surface by means of plurality of motorized omnidirectional wheels 2, and platform 1 is placed with utensil over a suction unit arranged over platform 1, a touch interactive display panel 3 to receive an input regrading repairing of utensil, an artificial intelligence based imaging unit 4 determines presence of any burnt stains over utensil, a robotic arm 5 positions a motorized brush configured with arm 5 over utensil for scrubbing burnt stains, a multi-sectioned chamber 6 stored with plurality of heat resistant handle covers of various dimensions, a laser sensor determines dimension of a handle, a robotic gripper 7 engage cover over handle and pull trhe thread and pull out thread for detaching thread resulting in contraction of cover and clenching of handle.

No. of Pages : 16 No. of Claims : 4

(12) PATENT APPLICATION PUBLICATION
(21) Application No.202411025487 A
(19) INDIA
(22) Date of filing of Application :28/03/2024
(43) Publication Date : 14/11/2025

(54) Title of the invention : ADAPTABLE BRAZING OPERATION ASSISTIVE DEVICE

(51) International classification	:B61B0001020000, E21B0015020000, H01L0021670000, A47K0010320000, E01F0001000000	(71)**Name of Applicant :** **1)Chandigarh Group of Colleges** Address of Applicant :Landran Kharar Banur Highway, Sector 112, Sahibzada Ajit Singh Nagar, Landran, Mohali, Punjab-140307, India. Mohali Punjab India (72)**Name of Inventor :** **1)Dr. Chamkaur Singh** **2)Dr. Chhinder Kaur** **3)Shubhanshu Tiwari** **4)Rahul Kumar Pathak**
(31) Priority Document No	:NA	
(32) Priority Date	:NA	
(33) Name of priority country	:NA	
(86) International Application No	:NA	
Filing Date	:NA	
(87) International Publication No	: NA	
(61) Patent of Addition to Application Number	:NA	
Filing Date	:NA	
(62) Divisional to Application Number	:NA	
Filing Date	:NA	

(57) Abstract :
An adaptable brazing operation assistive device comprises of a platform 1 positioned on a fixed surface, plurality of suction cups 2 are installed underneath the platform 1 to adhere to the platform 1 for securing the platform 1 on the surface, an expandable U-shaped slot 3 installed on the platform 1 to expand/contract for enabling a user to accommodate a first metallic pipe in the slot 3, multiple suction units are installed on inner periphery of the slot 3 for securing the first pipe in the slot 3, an imaging unit 4 arranged on the platform 1 to determine dimensions of the pipe, an ultrasonic sensor to detect presence of a second metallic pipe that is to be joined on the first pipe and an electronically controlled nozzle 6 is embedded on the platform 1 for dispensing water on the joined part of the pipe to detect leakage.

No. of Pages : 17 No. of Claims : 5

(12) PATENT APPLICATION PUBLICATION
(21) Application No.202411025488 A
(19) INDIA
(22) Date of filing of Application :28/03/2024
(43) Publication Date : 14/11/2025

(54) Title of the invention : AUTOMATED ANTI-SEEPAGE SHEET INSTALLATION DEVICE

(51) International classification	:A44B0019580000, H04B0001382700, H03K0017955000, B25J0005000000, E01H0001080000
(31) Priority Document No	:NA
(32) Priority Date	:NA
(33) Name of priority country	:NA
(86) International Application No	:NA
Filing Date	:NA
(87) International Publication No	: NA
(61) Patent of Addition to Application Number	:NA
Filing Date	:NA
(62) Divisional to Application Number	:NA
Filing Date	:NA

(71)**Name of Applicant :**
1)Chandigarh Group of Colleges
Address of Applicant :Landran Kharar Banur Highway, Sector 112, Sahibzada Ajit Singh Nagar, Landran, Mohali, Punjab-140307, India. Mohali Punjab India
(72)**Name of Inventor :**
1)Dr. Chhinder Kaur
2)Rajinder Kumar
3)Ashish Guleria
4)Akshit Madan

(57) Abstract :
An automated anti-seepage sheet installation device, comprising a body 1 developed to be positioned on a ground surface, artificial intelligence-based imaging unit 2 for capturing multiple images in vicinity of the body 1 to determine positioning of the body 1 with respect to a concrete wall present in proximity to the body 1, motorized wheels 10 to move the body 1 towards the wall, hydraulically operated rods 3 to extend for positioning a vertical motorized sliding unit 4 in front of the wall, multi-sectioned chamber 5 for storing metal sheets, robotic arms 6 to grip a metal sheet stored in the chamber 5, sliding unit 4 for positioning gripped sheet in proximity to the clamping units 7, hydraulic actuator 8 for forcing the sheet at the gapping and ultrasonic-enabled vibrating units 9 produce vibrating sensation for enforcing the sheet in the wall at the gapping.

No. of Pages : 16 No. of Claims : 3

(12) PATENT APPLICATION PUBLICATION
(21) Application No.202411025449 A
(19) INDIA
(22) Date of filing of Application :28/03/2024
(43) Publication Date : 14/11/2025

(54) Title of the invention : ADAPTABLE CRANKSHAFT TIMING GEAR REMOVAL ASSISTIVE DEVICE

(51) International classification	:F16D0027105000, G01S0007481000, G01S0017100000, F16H0055170000, B60W0030090000
(31) Priority Document No	:NA
(32) Priority Date	:NA
(33) Name of priority country	:NA
(86) International Application No	:NA
Filing Date	:NA
(87) International Publication No	: NA
(61) Patent of Addition to Application Number	:NA
Filing Date	:NA
(62) Divisional to Application Number	:NA
Filing Date	:NA

(71)**Name of Applicant :**
1)Chandigarh University
Address of Applicant :National Highway 95, Chandigarh-Ludhiana Highway, Mohali, Punjab 140413, India. Mohali Punjab India
2)Chandigarh University Technology Business Incubator
(72)**Name of Inventor :**
1)Vinay Kumar

(57) Abstract :
An adaptable crankshaft timing gear removal assistive device, comprising a cylindrical body 1 fabricated with a T-shaped handle 2 , the handle 2 is accessed by a user to position the body 1 in proximity to a timing gear in a crankshaft, an artificial intelligence-based imaging unit 3 determine dimensions of the timing gear, a motorized pulley arrangement 4 arranged in the body 1 for increasing/decreasing dimensions of the body 1 , a LiDAR determines distance of teeth of the timing gear from the body 1 , plurality of telescopically operated links 5 positions a L-shaped pin integrated on each of the links 5 between the teeth of the gear for engaging the pins on the gear, and an electromagnetic spring 6 exerts pulling force on the spring 6 .

No. of Pages : 15 No. of Claims : 5

(12) PATENT APPLICATION PUBLICATION
(21) Application No.202411025450 A
(19) INDIA
(22) Date of filing of Application :28/03/2024
(43) Publication Date : 14/11/2025

(54) Title of the invention : BATTER-BASED FOOD PREPARATION DEVICE

(51) International classification	:H01Q0007000000, G06K0009620000, A47J0037060000, G01N0029240000, B33Y0030000000	(71)**Name of Applicant :** **1)Chandigarh University** Address of Applicant :National Highway 95, Chandigarh-Ludhiana Highway, Mohali, Punjab 140413, India. Mohali Punjab India **2)Chandigarh University Technology Business Incubator**
(31) Priority Document No	:NA	(72)**Name of Inventor :**
(32) Priority Date	:NA	**1)Mohammad Ashfaq**
(33) Name of priority country	:NA	
(86) International Application No	:NA	
Filing Date	:NA	
(87) International Publication No	: NA	
(61) Patent of Addition to Application Number	:NA	
Filing Date	:NA	
(62) Divisional to Application Number	:NA	
Filing Date	:NA	

(57) Abstract :
A batter-based food preparation device, comprising a cooking surface 1 associated with device developed to be positioned on a burner wherein surface 1 is utilized for cooking of a batter-based food item, a pole 2 attached with a storage chamber 3 integrated with surface 1 wherein chamber 3 is dedicated towards storage of batter which is dispensed out of a nozzle 4 installed at a base portion of chamber 3 in a regulated amount, an odor sensor 5 installed inside chamber 3 for detecting the smell produced out of stored batter, a base plate 6 hinged with surface 1 that is directed by microcontroller to actuate simultaneously with dispensing of batter via nozzle 4, an artificial intelligence enabled image capturing module 7 integrated with a processor positioned on pole 2 to determine cooking condition of batter.

No. of Pages : 14 No. of Claims : 3

(12) PATENT APPLICATION PUBLICATION
(21) Application No.202411025454 A
(19) INDIA
(22) Date of filing of Application :28/03/2024
(43) Publication Date : 14/11/2025

(54) Title of the invention : MOTORCYCLE WHEEL RIM MAINTENANCE DEVICE

(51) International classification	:B08B0001000000, B08B0001040000, G03B0021560000, B25J0019020000, A47L0011400000	(71)**Name of Applicant :** **1)Chandigarh University** Address of Applicant :National Highway 95, Chandigarh-Ludhiana Highway, Mohali, Punjab 140413, India. Mohali Punjab India **2)Chandigarh University Technology Business Incubator**
(31) Priority Document No	:NA	(72)**Name of Inventor :**
(32) Priority Date	:NA	**1)Lochan Sharma**
(33) Name of priority country	:NA	
(86) International Application No	:NA	
Filing Date	:NA	
(87) International Publication No	: NA	
(61) Patent of Addition to Application Number	:NA	
Filing Date	:NA	
(62) Divisional to Application Number	:NA	
Filing Date	:NA	

(57) Abstract :
A motorcycle wheel rim maintenance device, comprising a platform 1 positioned on a ground surface and installed with an inverted U-shaped frame 2, installed with a circular disc via a rod for accommodating a motorcycle wheel rim, a touch enabled screen 3 to give input commands for maintenance of rim, an expandable pulley arrangement increasing diameter of disc for gripping rim with disc, a motorized roller 4 installed on platform 1 via an L-shaped telescopically operated bar 5 for positioning roller 4 near bottom portion of rim, to rotate rim, an artificial intelligence-based imaging unit 6 detects alignment of rim, a telescopically operated pusher 7 extends/retracts to apply force on rim for straightening rim, and an electronic nozzle 8 attached with a chamber 9 for dispensing cleaning solution to loosen dirt/dust from rim, a robotic arm 10 via a brush 4 eliminates moisture from rim.

No. of Pages : 17 No. of Claims : 6

(12) PATENT APPLICATION PUBLICATION
(21) Application No.202411025463 A
(19) INDIA
(22) Date of filing of Application :28/03/2024
(43) Publication Date : 14/11/2025

(54) Title of the invention : LISDEXAMFETAMINE DIMESYLATE ORODISPERSIBLE TABLET AND PROCESS FOR PREPARATION THEREOF

(51) International classification	:A61K9/00, A61K9/24, A61K9/46, A61K31/4178, A61K31/422, A61K31/519, A61P25/24, A61P9/00	(71)**Name of Applicant :** **1)ATHENA PHARMACEUTIQUES SAS** Address of Applicant :Espace Arnold De Ville 12 Rue Georges Blandon 78430 Louveciennes France (72)**Name of Inventor :** **1)Mahendra Baliram Chaudhari** **2)Omprakash Doulatram Chandwani** **3)Nitin Pandharinath Nehete** **4)Amol Yuvraj Chaudhari** **5)Anita Kunal Shahane**
(31) Priority Document No	:NA	
(32) Priority Date	:NA	
(33) Name of priority country	:NA	
(86) International Application No	:NA	
Filing Date	:NA	
(87) International Publication No	: NA	
(61) Patent of Addition to Application Number	:NA	
Filing Date	:NA	
(62) Divisional to Application Number	:NA	
Filing Date	:NA	

(57) Abstract :
The present disclosure relates to a lisdexamfetamine dimesylate orodispersible tablet and a process for preparation thereof. The lisdexamfetamine dimesylate orodispersible tablet comprises: co-sifting lisdexamfetamine dimesylate; a binder and a diluent; dry mixing and blending the sifted lisdexamfetamine dimesylate, the binder and the diluent to form a blended dry mix; co-sifting and blending the diluent, a cushioning agent, a disintegrating agent, a sweetener, and an antistatic agent to prepare an intermediate blend; blending the blended dry mix and the intermediate blend; lubricating the blended dry mix and the intermediate blend to form ready to compress drug granules; and compressing the ready to compress drug granules to form compressed lisdexamfetamine dimesylate orodispersible tablet. FIG. 1.

No. of Pages : 50 No. of Claims : 16

(12) PATENT APPLICATION PUBLICATION
(21) Application No.202411025489 A
(19) INDIA
(22) Date of filing of Application :28/03/2024
(43) Publication Date : 14/11/2025

(54) Title of the invention : ADJUSTABLE PIT SHAPING ASSISTIVE DEVICE

(51) International classification	:G06F0003041000, G01S0017931000, H04N0005770000, G06F0003010000, B62B0005000000
(31) Priority Document No	:NA
(32) Priority Date	:NA
(33) Name of priority country	:NA
(86) International Application No	:NA
Filing Date	:NA
(87) International Publication No	: NA
(61) Patent of Addition to Application Number	:NA
Filing Date	:NA
(62) Divisional to Application Number	:NA
Filing Date	:NA

(71)**Name of Applicant :**
1)Chandigarh Group of Colleges
Address of Applicant :Landran Kharar Banur Highway, Sector 112, Sahibzada Ajit Singh Nagar, Landran, Mohali, Punjab-140307, India. Mohali Punjab India
(72)**Name of Inventor :**
1)Dr. Inderpreet Kaur
2)Anuradha Saini
3)Mansi Grover
4)Abhilasha sharma

(57) Abstract :
An adjustable pit shaping assistive device comprises a frame 1 having pair of rectangular structures developed to be positioned on in a pit, a touch interactive display panel 2 is installed on the frame 1 for enabling a user to provide input, an artificial intelligence-based imaging unit 3 installed on the frame 1 determine dimensions of the pit, a LiDAR sensor embedded on the frame 1 and synced with the imaging unit 3 to determine distance of the walls from the structures, plurality of hydraulic actuators 4 positioning the structures on the walls of the pit, plurality of motorized wheels 5 arranged underneath the frame 1 for moving the frame 1 on ground surface of the pit, an elongated blade 6 is integrated on one end of the structure that is also moved against surface of the walls in view of cutting the evaluated portions.

No. of Pages : 14 No. of Claims : 3

(12) PATENT APPLICATION PUBLICATION
(21) Application No.202411025490 A
(19) INDIA
(22) Date of filing of Application :28/03/2024
(43) Publication Date : 14/11/2025

(54) Title of the invention : AUTOMATED TARP SHEET SPREADING DEVICE

(51) International classification	:B32B0038000000, B65G0023080000, B32B0037000000, B60J0007080000, B32B0037100000	(71)**Name of Applicant :** **1)Chandigarh Group of Colleges** Address of Applicant :Landran Kharar Banur Highway, Sector 112, Sahibzada Ajit Singh Nagar, Landran, Mohali, Punjab-140307, India. Mohali Punjab India
(31) Priority Document No	:NA	(72)**Name of Inventor :**
(32) Priority Date	:NA	**1)Dr. Tejinder Pal Singh Brar**
(33) Name of priority country	:NA	**2)Anuradha Saini**
(86) International Application No	:NA	**3)Sourabh Gorssi**
Filing Date	:NA	**4)Vikas Gulia**
(87) International Publication No	: NA	
(61) Patent of Addition to Application Number	:NA	
Filing Date	:NA	
(62) Divisional to Application Number	:NA	
Filing Date	:NA	

(57) Abstract :
An automated tarp sheet spreading device, comprising frame 1 developed to be positioned on ground surface, touch interactive display panel 2 that is accessed by user for providing input regarding area of ground surface over which tarp sheet is to be spread, artificial intelligence-based imaging unit 3 for capturing and processing multiple images in vicinity of the frame 1, motorized roller 4 to rotate for unwrapping tarp sheet coiled on the roller 4, hydraulically operated clamping units 5 for applying pressure on the unwrapped sheet in view of laying the sheet on the surface, motorized gripper 6 installed on frame 1 and integrated with blade 8 to cut the sheet in view of detaching the laid sheet from the frame 1 and a motorized ball and socket joint 7 for providing angular movement to the roller 4 in order to align the roller 4 appropriately with respect to the surface.

No. of Pages : 14 No. of Claims : 3

(12) PATENT APPLICATION PUBLICATION
(21) Application No.202411025491 A
(19) INDIA
(22) Date of filing of Application :28/03/2024
(43) Publication Date : 14/11/2025

(54) Title of the invention : ADAPTABLE JUTE-FIBER WRAPPING ASSISTIVE DEVICE

(51) International classification	:B25J0015000000, B25J0013080000, B25J0009160000, A61H0003000000, B25J0015020000
(31) Priority Document No	:NA
(32) Priority Date	:NA
(33) Name of priority country	:NA
(86) International Application No	:NA
Filing Date	:NA
(87) International Publication No	: NA
(61) Patent of Addition to Application Number	:NA
Filing Date	:NA
(62) Divisional to Application Number	:NA
Filing Date	:NA

(71)**Name of Applicant :**
1)Chandigarh Group of Colleges
Address of Applicant :Landran Kharar Banur Highway, Sector 112, Sahibzada Ajit Singh Nagar, Landran, Mohali, Punjab-140307, India. Mohali Punjab India
(72)**Name of Inventor :**
1)Dr. Tejinder Pal Singh Brar
2)Dr. Simrat Kaur
3)Ruby Khatta
4)Sandeep Kumar Sharma

(57) Abstract :
An adaptable jute-fiber wrapping assistive device, comprising a circular ring 1 frame 1 is positioned on top portion, an artificial intelligence-based imaging unit 2 to determine dimensions of the beam, a motorized pulley arrangement 3 for increasing/decreasing dimensions of frame, a pair of robotic clippers 4 for acquiring a grip, a motorized roller 5 coiled to rotate for unwrapping the sheet 6, an ultrasonic sensor to monitor surface of beam, a robotic gripper 6 to acquire a grip of ends of unwrapped sheet, a circular slider 7 for providing translation to roller 5, a telescopically operated rod 8 to extend/retract for positioning roller 5 in proximity to distances, plurality of electronically controlled nozzles 9 for dispensing water stored in a chamber.

No. of Pages : 16 No. of Claims : 3

(12) PATENT APPLICATION PUBLICATION
(21) Application No.202411025492 A
(19) INDIA
(22) Date of filing of Application :28/03/2024
(43) Publication Date : 14/11/2025

(54) Title of the invention : BRANCH PRUNING DEVICE

(51) International classification	:A01G0003080000, G05D0001020000, G05D0001000000, A61H0003000000, A01G0003020000	(71)**Name of Applicant :** **1)Chandigarh Group of Colleges** Address of Applicant :Landran Kharar Banur Highway, Sector 112, Sahibzada Ajit Singh Nagar, Landran, Mohali, Punjab-140307, India. Mohali Punjab India
(31) Priority Document No	:NA	(72)**Name of Inventor :** **1)Dr. Inderpreet Kaur**
(32) Priority Date	:NA	**2)Rajinder Kumar**
(33) Name of priority country	:NA	**3)Lucky**
(86) International Application No	:NA	**4)Abhay Nanda**
Filing Date	:NA	
(87) International Publication No	: NA	
(61) Patent of Addition to Application Number	:NA	
Filing Date	:NA	
(62) Divisional to Application Number	:NA	
Filing Date	:NA	

(57) Abstract :
A branch pruning device, comprising, a frame 1 having two arm arranged in a V shape, attached via a motorized hinge joint to provide movement to the frame 1, an electromagnetic clamp provided above the hinge joint for mounting a part of a vehicle, a telescopic rod 2 attached at the end of the arms, plurality of motorized circular blades 3 attached with the rod 2 rotate to cut the branch into smaller pieces, horizontal blades 3 attached with bottom ends of the rod 2 to cut a proximal part of the branch, a suction unit 5 is attached underneath the cover flap 4, to collect cut branches in a collector box 6 via a conduit, an artificial intelligence-based imaging unit installed on the main rod 2 for detecting a presence of an obstacle or a person in the vicinity.

No. of Pages : 16 No. of Claims : 5

(12) PATENT APPLICATION PUBLICATION
(21) Application No.202411025559 A
(19) INDIA
(22) Date of filing of Application :28/03/2024
(43) Publication Date : 14/11/2025

(54) Title of the invention : AUTOMATED LEAVENED DOUGH BAKING DEVICE

(51) International classification	:F16D0027105000, A61B0005000000, H04B0001382700, B65D0083040000, G02B0021260000	(71)**Name of Applicant :** **1)Shobhit Institute of Engineering & Technology (Deemed to-be University)** Address of Applicant :NH-58, Dulhera Marg, Modipuram, Meerut-250110, Uttar Pradesh, India. Meerut Uttar Pradesh India (72)**Name of Inventor :** **1)M. Moni** **2)Anil Joshi** **3)Nimra** **4)Neha Vashishta**
(31) Priority Document No	:NA	
(32) Priority Date	:NA	
(33) Name of priority country	:NA	
(86) International Application No	:NA	
Filing Date	:NA	
(87) International Publication No	: NA	
(61) Patent of Addition to Application Number	:NA	
Filing Date	:NA	
(62) Divisional to Application Number	:NA	
Filing Date	:NA	

(57) Abstract :
An automated leavened dough baking device, comprising a cylindrical hollow body 1 positioned on ground surface, motorized wheels 2 for providing movement to the body 1 on the surface, touch enabled screen allowing user to enter details regarding a time duration for which wire is to be ignited inside the body 1, multi-sectioned chamber 3 for storing solid fuels, motorized iris lid 4 for dispensing the solid fuels on bottom of the chamber 3, electric lighter to ignite the fuels, L-shaped telescopic rod 7 to facilitate user to position a leavened dough over the structure, circular sliders 5 to facilitate proper baking of the dough, AI based imaging unit 9 to capture images of the body 1, electromagnetic spring 10 to absorbs shocks and fluctuation during placement of the dough by the user and motorized ball and socket joint 11 to facilitate placement of the dough inside the body 1.

No. of Pages : 18 No. of Claims : 6

(12) PATENT APPLICATION PUBLICATION
(21) Application No.202411025560 A
(19) INDIA
(22) Date of filing of Application :28/03/2024
(43) Publication Date : 14/11/2025

(54) Title of the invention : ADAPTABLE TRAVELLING ASSISTIVE SYSTEM FOR BLINDS

(51) International classification	:G06F0003048200, G06F0003160000, G09B0021000000, G06F0021100000, G06Q0010100000	(71)**Name of Applicant :** **1)Shobhit Institute of Engineering & Technology (Deemed to-be University)** Address of Applicant :NH-58, Dulhera Marg, Modipuram, Meerut-250110, Uttar Pradesh, India. Meerut Uttar Pradesh India
(31) Priority Document No	:NA	(72)**Name of Inventor :** **1)Tarun Kumar Sharma**
(32) Priority Date	:NA	**2)Arun Saini**
(33) Name of priority country	:NA	**3)Tarun Saini**
(86) International Application No	:NA	**4)Neha Yajurvedi**
Filing Date	:NA	
(87) International Publication No	: NA	
(61) Patent of Addition to Application Number	:NA	
Filing Date	:NA	
(62) Divisional to Application Number	:NA	
Filing Date	:NA	

(57) Abstract :
An adaptable travelling assistive system for blinds, comprising a wearable component 1 associated with the system developed to be worn by a user on the user's wrist, an artificial intelligence-based imaging unit 2 installed on the component 1 to monitor surrounding of the user, a scanner 3 installed on the component 1 that is accessed by the user for scanning a ticket purchased by the user for travelling purpose, an earpiece 4 associated with the component 1 to produce audio command for guiding the user to walk on the tactile path on the route and an OCR (optical character recognition) module 5 installed on the component 1 to detect numbers integrated on seats inside the train and guide the user to reach the user-reserved seat inside the train via the earpiece 4.

No. of Pages : 15 No. of Claims : 3

(12) PATENT APPLICATION PUBLICATION
(21) Application No.202411025561 A
(19) INDIA
(22) Date of filing of Application :28/03/2024
(43) Publication Date : 14/11/2025

(54) Title of the invention : ADAPTABLE COAL GUARD SYSTEM FOR COAL TRAINS

(51) International classification	:B65G0023080000, A61F0002920000, E01H0011000000, E21C0035240000, B65G0043000000
(31) Priority Document No	:NA
(32) Priority Date	:NA
(33) Name of priority country	:NA
(86) International Application No	:NA
Filing Date	:NA
(87) International Publication No	: NA
(61) Patent of Addition to Application Number	:NA
Filing Date	:NA
(62) Divisional to Application Number	:NA
Filing Date	:NA

(71)**Name of Applicant :**
1)Shobhit Institute of Engineering & Technology (Deemed to-be University)
Address of Applicant :NH-58, Dulhera Marg, Modipuram, Meerut-250110, Uttar Pradesh, India. Meerut Uttar Pradesh India
(72)**Name of Inventor :**
1)R. P. Aggarwal
2)Anil Joshi
3)Nimra
4)Neha Rani

(57) Abstract :
An adaptable coal guard system for coal trains, comprising a framework developed to be mounted on each wagon of a coal-carrying train, multiple electromagnets 2 mounted on the framework affixes the framework on the train, an artificial intelligence-based imaging unit 3 mounted on the framework detects ignited coal stored in the wagon, a pair of expandable bars 4 organized with the framework gets positioned on other end of the wagon, a motorized roller 1 coiled with a sheet mounted with the framework for covering mouth portion of the wagon, multiple electronically controlled nozzles 5 mounted with the bars 4 dispense water on the coal, and a weight sensor mounted on the framework monitors weight of the stored coal.

No. of Pages : 16 No. of Claims : 3

(12) PATENT APPLICATION PUBLICATION
(21) Application No.202411025565 A
(19) INDIA
(22) Date of filing of Application :28/03/2024
(43) Publication Date : 14/11/2025

(54) Title of the invention : AUTOMATED STRAW/HAY STORING AND UNLOADING DEVICE

(51) International classification	:B62B0005000000, A01D0078100000, A01D0087000000, B61B0001020000, B60P0001000000	(71)**Name of Applicant :** **1)Shobhit Institute of Engineering & Technology (Deemed to-be University)** Address of Applicant :NH-58, Dulhera Marg, Modipuram, Meerut-250110, Uttar Pradesh, India. Meerut Uttar Pradesh India
(31) Priority Document No	:NA	(72)**Name of Inventor :** **1)Alpana Joshi**
(32) Priority Date	:NA	**2)Vikas Yadav**
(33) Name of priority country	:NA	**3)Reetesh Pratap Singh**
(86) International Application No	:NA	**4)Sonam Arya**
Filing Date	:NA	
(87) International Publication No	: NA	
(61) Patent of Addition to Application Number	:NA	
Filing Date	:NA	
(62) Divisional to Application Number	:NA	
Filing Date	:NA	

(57) Abstract :
An automated straw/hay storing and unloading device comprises a cuboidal body 1 configured with a pair of track wheels 17 for maneuvering the body 1, an artificial intelligence-based imaging unit evaluates a 3D mapping of the surroundings, a touch enabled screen 3 installed on the platform for user input, a set of curved plates 4 installed on the body 1 via a telescopically operated rod 5 for positioning the plates 4, a motorized threaded shaft 7 configured with a block 8 via a pivot joint 9 tilting of the plate 6 along with the straw/hay, a motorized door installed on the body 1, a pair of L-shaped hydraulically operated links 10 installed on the body 1 and each configured with an extendable curved-shaped member 11 accommodates the straw/hay with the members 11, a telescopically operated pusher 12 for loading the straw/hay over the member 11.

No. of Pages : 19 No. of Claims : 6

(12) PATENT APPLICATION PUBLICATION
(21) Application No.202411025464 A
(19) INDIA
(22) Date of filing of Application :28/03/2024
(43) Publication Date : 14/11/2025

(54) Title of the invention : A SWITCH ASSEMBLY FOR A VEHICLE

(51) International classification	:H04M0001020000, H01H0009180000, H01H0011000000, H01L0023310000, H05K0003280000
(31) Priority Document No	:NA
(32) Priority Date	:NA
(33) Name of priority country	:NA
(86) International Application No	:NA
Filing Date	:NA
(87) International Publication No	: NA
(61) Patent of Addition to Application Number	:NA
Filing Date	:NA
(62) Divisional to Application Number	:NA
Filing Date	:NA

(71)**Name of Applicant :**
1)Uno Minda Limited
Address of Applicant :Village Nawada, Fatehpur, P.O. Sikanderpur Badda, Distt. Gurgaon, Haryana - 122004, India Gurgaon Haryana India
(72)**Name of Inventor :**
1)SAHANI, Rahul
2)SHARMA, Shwetaank
3)UPPAL, Sandeep

(57) Abstract :
The present disclosure relates to a switch assembly (100) for a vehicle. The switch assembly (100) includes a housing (110), a Printed Circuit Board (PCB) (120), a first knob (102), a second knob (104), and a third knob (106). The second knob (104) is positioned adjacent to the first knob (102) and adapted to be pushed in a downward direction to actuate a second microswitch. The third knob (106) is disposed in the hollow portion of the housing (110) and adapted to be rotated to operate at least one third microswitch. The first knob (102) and the second knob (104) are movably positioned within an internal periphery of the third knob (106), such that at least one of the first knob (102) and the second knob (104) is adapted to be pushed in the downward direction relative to the third knob (106).

No. of Pages : 28 No. of Claims : 13

(12) PATENT APPLICATION PUBLICATION
(21) Application No.202411025465 A
(19) INDIA
(22) Date of filing of Application :28/03/2024
(43) Publication Date : 14/11/2025

(54) Title of the invention : AUTOMATED USB PIN CASE MOLDING DEVICE

(51) International classification	:B25J0015000000, B29C0045270000, G06F0003160000, B33Y0030000000, B25J0009160000	(71)**Name of Applicant :** **1)Chandigarh University** Address of Applicant :National Highway 95, Chandigarh-Ludhiana Highway, Mohali, Punjab 140413, India. Mohali Punjab India **2)Chandigarh University Technology Business Incubator**
(31) Priority Document No	:NA	(72)**Name of Inventor :**
(32) Priority Date	:NA	**1)Ranvijay Kumar**
(33) Name of priority country	:NA	
(86) International Application No	:NA	
Filing Date	:NA	
(87) International Publication No	: NA	
(61) Patent of Addition to Application Number	:NA	
Filing Date	:NA	
(62) Divisional to Application Number	:NA	
Filing Date	:NA	

(57) Abstract :
An automated USB pin case molding device, comprises of platform 1 positioned over a fixed surface by means of plurality of suction cups 2, a touch interactive display panel 3 to enable the user to provide an input regarding molding of the USB pin, an artificial intelligence based imaging unit 4 for capturing and processing images of USB pin, a robotic gripper 5 to grip the USB pin and positioned within mold, a mixing chamber 6 stored with plastic pellets, a heating element to melt the plastic pellets, a motorized stirrer 7 to aid in melting of the plastic pallets, an electronic nozzle 8 to pour a regulated amount of the melted plastic within the mold 11, a robotic link 9 for position the nozzle 8 over the mold, a hydraulic press 10 to extend and apply a regulated amount of pressure over the mold.

No. of Pages : 16 No. of Claims : 4

(12) PATENT APPLICATION PUBLICATION
(21) Application No.202411025466 A
(19) INDIA
(22) Date of filing of Application :28/03/2024
(43) Publication Date : 14/11/2025

(54) Title of the invention : ADJUSTABLE TOOL ACCOMMODATING DEVICE

(51) International classification	:G10L0015220000, G06F0003048800, G06F0003048200, G06F0003048420, B23D0047020000	(71)**Name of Applicant :** **1)Chandigarh University** Address of Applicant :National Highway 95, Chandigarh-Ludhiana Highway, Mohali, Punjab 140413, India. Mohali Punjab India **2)Chandigarh University Technology Business Incubator**
(31) Priority Document No	:NA	(72)**Name of Inventor :**
(32) Priority Date	:NA	**1)Hushnud**
(33) Name of priority country	:NA	
(86) International Application No	:NA	
Filing Date	:NA	
(87) International Publication No	: NA	
(61) Patent of Addition to Application Number	:NA	
Filing Date	:NA	
(62) Divisional to Application Number	:NA	
Filing Date	:NA	

(57) Abstract :
An adjustable tool accommodating device, comprising a frame 1 configured with a pair of rings interconnected via plurality of extendable rods, a microphone 2 installed over the frame 1 to receive voice command of the user regrading griping of a tool, an artificial intelligence based imaging unit 3 installed over the frame 1, plurality of extendable grippers 4 installed on the frame 1 to grip the tool in accordance with the detected diameter, a motorized circular sliding units 5 installed over the frame 1 to position the user-specified tool as detected via the imaging unit 3.

No. of Pages : 14 No. of Claims : 5

(12) PATENT APPLICATION PUBLICATION
(21) Application No.202411025467 A
(19) INDIA
(22) Date of filing of Application :28/03/2024
(43) Publication Date : 14/11/2025

(54) Title of the invention : COVERING DEVICE FOR A PIPE

(51) International classification	:G05D0001020000, B25J0005000000, B60L0015200000, A47L0011400000, B60L0050520000	(71)**Name of Applicant :** **1)Chandigarh University** Address of Applicant :National Highway 95, Chandigarh-Ludhiana Highway, Mohali, Punjab 140413, India. Mohali Punjab India **2)Chandigarh University Technology Business Incubator**
(31) Priority Document No	:NA	(72)**Name of Inventor :**
(32) Priority Date	:NA	**1)Imran Anwar**
(33) Name of priority country	:NA	
(86) International Application No	:NA	
Filing Date	:NA	
(87) International Publication No	: NA	
(61) Patent of Addition to Application Number	:NA	
Filing Date	:NA	
(62) Divisional to Application Number	:NA	
Filing Date	:NA	

(57) Abstract :
A covering device for a pipe comprises a cover body 1 made of plurality of metal plates 2 connected with each other by motorized hinged joints 3, a sensor module measures a diameter of the pipe to determine a location of the magnetic end plate on the body, a roller 4 carrying a spool of seal wrap attached on an inner surface of the cover body 1, plurality of motorized wheels 5 to move the body, a clamp 6 provided on the inner surface of the cover body 1, wherein when the sensing module detects a loose pipe joint under the cover body 1, and an artificial intelligence-based imaging unit 7 detecting a presence of a human in vicinity of the pipe, a fire extinguisher unit 8 provided on the body having a storage tank having an extinguishing substance attached to a spray nozzle.

No. of Pages : 17 No. of Claims : 4

(12) PATENT APPLICATION PUBLICATION
(21) Application No.202411025468 A
(19) INDIA
(22) Date of filing of Application :28/03/2024
(43) Publication Date : 14/11/2025

(54) Title of the invention : TWO-WHEELER VEHICLE CARRIAGE ASSISTIVE DEVICE

(51) International classification	:A61B0017000000, E05B0071000000, G08G0001040000, E05B0047000000, B60R0025102000	(71)**Name of Applicant :** **1)Chandigarh University** Address of Applicant :National Highway 95, Chandigarh-Ludhiana Highway, Mohali, Punjab 140413, India. Mohali Punjab India **2)Chandigarh University Technology Business Incubator**
(31) Priority Document No	:NA	(72)**Name of Inventor :**
(32) Priority Date	:NA	**1)Nishant Ranjan**
(33) Name of priority country	:NA	
(86) International Application No	:NA	
Filing Date	:NA	
(87) International Publication No	: NA	
(61) Patent of Addition to Application Number	:NA	
Filing Date	:NA	
(62) Divisional to Application Number	:NA	
Filing Date	:NA	

(57) Abstract :
A two-wheeler vehicle carriage assistive device, comprising, a platform 1 constructed with multiple extendable plates 7 , to accommodate multiple two-wheeler vehicles, and installed with a rectangular member 2 via a rod 5, multiple electromagnets 8 for adhering the members 2 with the chassis, an imaging unit 4 for detecting presence of the two-wheeler vehicles in surroundings, a motorized hinge 3 for tilting and deploying a ramp in contact with ground surface for allowing the user to accommodate the two-wheeler vehicles on the plates 7 , an ultrasonic sensor for detecting dimensions of the two-wheeler vehicles, a pair of laser sensors to detect width of wheels of the two-wheeler vehicles, a fingerprint sensor 9 to feed fingerprints for unlocking the wheels, motorized rollers to rotate for assisting the user in loading the vehicle on the plates 7 , and multiple weight for detecting weight of the two-wheeler vehicles.

No. of Pages : 19 No. of Claims : 5

(12) PATENT APPLICATION PUBLICATION
(21) Application No.202411025493 A
(19) INDIA
(22) Date of filing of Application :28/03/2024
(43) Publication Date : 14/11/2025

(54) Title of the invention : FOOD AND GLASS HOLDING DEVICE

(51) International classification	:G06Q0010100000, G10L0015220000, G06Q0030060000, G06F0016903000, G06F0003041000
(31) Priority Document No	:NA
(32) Priority Date	:NA
(33) Name of priority country	:NA
(86) International Application No	:NA
Filing Date	:NA
(87) International Publication No	: NA
(61) Patent of Addition to Application Number	:NA
Filing Date	:NA
(62) Divisional to Application Number	:NA
Filing Date	:NA

(71)**Name of Applicant :**
1)Chandigarh Group of Colleges
Address of Applicant :Landran Kharar Banur Highway, Sector 112, Sahibzada Ajit Singh Nagar, Landran, Mohali, Punjab-140307, India. Mohali Punjab India
(72)**Name of Inventor :**
1)Dr. Inderpreet Kaur
2)Dr. Simrat Kaur
3)Krish gupta
4)Nishant Singh

(57) Abstract :
A food and glass holding device, comprises of a rectangular platform 1 constructed with plurality of extendable plates, a microphone 2 positioned on the platform 1 for enabling the user to give voice commands, plurality of telescopically operated links 3 installed at the cavity for gripping the glass via a suction cup 4, an artificial intelligence-based imaging unit 5 mounted on plate for capturing and processing images of the platform 1, plurality of motorized hinges 6 configured between the plates to tilt the plates, a drawer arrangement 7 integrated within the plates to form a groove between the plates, a disc 8 installed with the platform 1 via a telescopically operated rod 9 for placing the platform 1, expandable pulley arrangement 10 integrated within the disc 8 for increasing diameter of the disc 8, a speaker 11 mounted on the platform 1 for notifying the user to discard the food.

No. of Pages : 19 No. of Claims : 5

(12) PATENT APPLICATION PUBLICATION
(21) Application No.202411025494 A
(19) INDIA
(22) Date of filing of Application :28/03/2024
(43) Publication Date : 14/11/2025

(54) Title of the invention : WOODEN LOG TRANSPORTATION ASSISTIVE DEVICE

(51) International classification	:H04L0009320000, F24C0003000000, G01N0033460000, H01L0029660000, A61H0003000000	(71)**Name of Applicant :** **1)Chandigarh Group of Colleges** Address of Applicant :Landran Kharar Banur Highway, Sector 112, Sahibzada Ajit Singh Nagar, Landran, Mohali, Punjab-140307, India. Mohali Punjab India
(31) Priority Document No	:NA	(72)**Name of Inventor :** **1)Dr. Simrat Kaur**
(32) Priority Date	:NA	**2)Navneet Katoch**
(33) Name of priority country	:NA	**3)Shivani**
(86) International Application No	:NA	**4)Raman Thakur**
Filing Date	:NA	
(87) International Publication No	: NA	
(61) Patent of Addition to Application Number	:NA	
Filing Date	:NA	
(62) Divisional to Application Number	:NA	
Filing Date	:NA	

(57) Abstract :
A wooden log transportation assistive device, comprising a housing 1 positioned on a ground surface and installed with an L-shaped structure 2 to be positioned in contact with a wooden log, a touch enabled screen 3 installed on the housing 1 for enabling a user to give input commands for transporting said wooden log to a selected location, an artificial intelligence-based imaging unit 4 mounted on the housing 1 for detecting diameter of the wooden log, a C-shaped motorized expandable clamp 5 installed with the structure 2 to expand for gripping the wooden log in a secured manner, a pair of plates 6 installed with bottom portion of the structure 2 to lift other end of the wooden log, a pair of C-shaped members 7 installed with the housing 1 for deploying the members 7 to grip the wooden log.

No. of Pages : 15 No. of Claims : 3

(12) PATENT APPLICATION PUBLICATION
(21) Application No.202411025495 A
(19) INDIA
(22) Date of filing of Application :28/03/2024
(43) Publication Date : 14/11/2025

(54) Title of the invention : AUTOMATED KITCHEN PLATE CLEANING DEVICE

(51) International classification	:A61B0034300000, B25J0018020000, B25J0009160000, A61L0002100000, E04G0023000000	(71)**Name of Applicant :** **1)Chandigarh Group of Colleges** Address of Applicant :Landran Kharar Banur Highway, Sector 112, Sahibzada Ajit Singh Nagar, Landran, Mohali, Punjab-140307, India. Mohali Punjab India
(31) Priority Document No	:NA	(72)**Name of Inventor :** **1)Dr. Tejinder Pal Singh Brar**
(32) Priority Date	:NA	**2)Dr. Chhinder Kaur**
(33) Name of priority country	:NA	**3)Chirag Garg**
(86) International Application No	:NA	**4)Avneet Kumar Singh**
Filing Date	:NA	
(87) International Publication No	: NA	
(61) Patent of Addition to Application Number	:NA	
Filing Date	:NA	
(62) Divisional to Application Number	:NA	
Filing Date	:NA	

(57) Abstract :
An automated kitchen plate cleaning device, comprises a platform 1 accessed by a user to accommodate multiple kitchen plates, multiple suction cups 2 secure the platform 1 on the surface, an imaging unit 3 captures images of vicinity of the platform 1, an expandable disc 4 expands to accommodate the plates, a sensing module detects intensity of stains, electronic nozzle 5 dispenses cleaning solution over the plates, a motorized disc 7 scrubs the plate via the bristles 9, an electronic valve 10 dispensing the water on the plate, a motorized hot air blower 12 blows hot air towards the plates, a container 13 stores kitchen paper, a pair of robotic arms 14 grip and position kitchen paper over the cleaned plate.

No. of Pages : 18 No. of Claims : 7

(12) PATENT APPLICATION PUBLICATION
(21) Application No.202411025496 A
(19) INDIA
(22) Date of filing of Application :28/03/2024
(43) Publication Date : 14/11/2025

(54) Title of the invention : AUTOMATED WOODEN-LOG CARVING DEVICE

(51) International classification	:G02B0021260000, G06F0003041000, B25J0009160000, G06F0003047000, F16B0047000000	
(31) Priority Document No	:NA	
(32) Priority Date	:NA	
(33) Name of priority country	:NA	
(86) International Application No	:NA	
Filing Date	:NA	
(87) International Publication No	: NA	
(61) Patent of Addition to Application Number	:NA	
Filing Date	:NA	
(62) Divisional to Application Number	:NA	
Filing Date	:NA	

(71)**Name of Applicant :**
1)Chandigarh Group of Colleges
Address of Applicant :Landran Kharar Banur Highway, Sector 112, Sahibzada Ajit Singh Nagar, Landran, Mohali, Punjab-140307, India. Mohali Punjab India
(72)**Name of Inventor :**
1)Anuradha Saini
2)Navneet Katoch
3)Aanchal
4)Akshit sharma

(57) Abstract :
An automated wooden-log carving device, comprising a platform 1 developed to be positioned on a fixed surface, suction cups 2 to adhere to the surface for securing the platform 1on the surface, a slot 3 for enabling a user to accommodate a trunk of a tree, touch interactive display panel 15 enabling a user to provide input regarding a user-desired trunk, artificial intelligence-based imaging unit 4 for capturing images of the platform 1 to determine position of the trunk, hydraulically operated bars 5 for positioning a motorized clamp 7 in proximity to the trunk, drawer arrangement 6 to increase/decrease dimensions of the clamp 7, motorized rollers 8 to rotate for unwrapping the straps, robotic arm 9 to acquire a grip of ends of the unwrapped straps, vertical sliders 10 to provide translation to a metallic plate 11.

No. of Pages : 16 No. of Claims : 4

(12) PATENT APPLICATION PUBLICATION
(21) Application No.202411025469 A
(19) INDIA
(22) Date of filing of Application :28/03/2024
(43) Publication Date : 14/11/2025

(54) Title of the invention : DRY BULK CARGO UNLOADING DEVICE

(51) International classification	:B65G0067300000, B65D0090040000, B65G0067240000, B23P0019020000, B60D0001360000	(71)**Name of Applicant :** **1)Chandigarh University** Address of Applicant :National Highway 95, Chandigarh-Ludhiana Highway, Mohali, Punjab 140413, India. Mohali Punjab India **2)Chandigarh University Technology Business Incubator**
(31) Priority Document No	:NA	(72)**Name of Inventor :**
(32) Priority Date	:NA	**1)Jasgurpreet Singh**
(33) Name of priority country	:NA	
(86) International Application No	:NA	
Filing Date	:NA	
(87) International Publication No	: NA	
(61) Patent of Addition to Application Number	:NA	
Filing Date	:NA	
(62) Divisional to Application Number	:NA	
Filing Date	:NA	

(57) Abstract :
A dry bulk cargo unloading device comprises a frame 1 installed with plurality of suction cups 2 for securing of frame 1 with vehicle's trailer, plurality of openings 3 crafted equidistance from each other for unloading of a dry bulk cargo, multiple motorized lids 4 that are capable of being slid on the openings 3 to open/close the openings 3 to a level as per requirement, an artificial intelligence enabled image capturing module 5 openings 3 to determine number of trolleys kept and the alignment of the trolleys that are to be stored with the unloaded cargo, a speaker 6 to produce voice commands corresponding to proper alignment of the trolleys and a robotic arm 7 for properly aligning said trolleys with the openings 3.

No. of Pages : 13 No. of Claims : 3

(12) PATENT APPLICATION PUBLICATION
(21) Application No.202411025470 A
(19) INDIA
(22) Date of filing of Application :28/03/2024
(43) Publication Date : 14/11/2025

(54) Title of the invention : LIQUID TRANSFER DEVICE FOR UTENSILS

(51) International classification	:A61B0005000000, A61B0017000000, B65D0025280000, B65D0025320000, B62B0003100000
(31) Priority Document No	:NA
(32) Priority Date	:NA
(33) Name of priority country	:NA
(86) International Application No	:NA
Filing Date	:NA
(87) International Publication No	: NA
(61) Patent of Addition to Application Number	:NA
Filing Date	:NA
(62) Divisional to Application Number	:NA
Filing Date	:NA

(71)**Name of Applicant :**
1)Chandigarh University
Address of Applicant :National Highway 95, Chandigarh-Ludhiana Highway, Mohali, Punjab 140413, India. Mohali Punjab India
2)Chandigarh University Technology Business Incubator
(72)**Name of Inventor :**
1)Shweta Chauhan

(57) Abstract :
A liquid transfer device for utensils comprises of a curved-shaped body 1 constructed with plurality of curved-shaped members 2 developed to be positioned in contact with side wall of a utensil, a microphone 3 to give voice commands for securing the body 1 with the side wall, an artificial intelligence-based imaging unit 4 for detecting shape of the side wall, multiple motorized hinges 5 to tilt the member towards or away from each other in view of securing the body 1 with the side wall via multiple suction cups 6 for allowing the user to transfer liquid from the utensil to an auxiliary container, a U-shaped handle 7 to extend for allowing the user to grip the handle 7 for transferring the liquid from the utensil to the auxiliary container, and multiple motorized omnidirectional via multiple telescopic links 9 for positioning wheels 8 in contact with the side wall.

No. of Pages : 16 No. of Claims : 5

(12) PATENT APPLICATION PUBLICATION
(21) Application No.202411025471 A
(19) INDIA
(22) Date of filing of Application :28/03/2024
(43) Publication Date : 14/11/2025

(54) Title of the invention : ADAPTABLE EATING ASSISTIVE DEVICE FOR DRIVERS

(51) International classification	:H04N0007180000, H04R0029000000, G06F0003160000, F04B0039100000, H04N0005225000	(71)**Name of Applicant :** **1)Chandigarh University** Address of Applicant :National Highway 95, Chandigarh-Ludhiana Highway, Mohali, Punjab 140413, India. Mohali Punjab India **2)Chandigarh University Technology Business Incubator**
(31) Priority Document No	:NA	(72)**Name of Inventor :**
(32) Priority Date	:NA	**1)Anjali Verma**
(33) Name of priority country	:NA	
(86) International Application No	:NA	
Filing Date	:NA	
(87) International Publication No	: NA	
(61) Patent of Addition to Application Number	:NA	
Filing Date	:NA	
(62) Divisional to Application Number	:NA	
Filing Date	:NA	

(57) Abstract :
An adaptable eating assistive device for drivers comprises of a plate 1 developed to be installed on a fixed surface in proximity to a driver's seat, plurality of suction units 2 integrated for adhering the plate 1 on the surface, an artificial intelligence-based imaging unit 3 installed on the plate 1 for capturing and processing images of the plate 1, a telescopically operated L-shaped rod 4 installed on the plate 1 for positioning end of the rod, a sensing module mounted 5 on the plate 1 for monitoring distance and angle of a multi-sectioned container 7, a motorized ball and socket joint 6 integrated between the rod and container 7 for providing angular movement, a speaker 8 integrated on the container 7 for producing audio notification, plurality of electronically controlled nozzles 9 integrated on the container 7 to dispense the driver-specified snacks.

No. of Pages : 16 No. of Claims : 4

(12) PATENT APPLICATION PUBLICATION
(21) Application No.202411025472 A
(19) INDIA
(22) Date of filing of Application :28/03/2024
(43) Publication Date : 14/11/2025

(54) Title of the invention : ADJUSTABLE SURFACE SHAPING DEVICE

(51) International classification	:G06F0003010000, G06F0003042000, B62B0005000000, H04N0009804000, A47F0013000000
(31) Priority Document No	:NA
(32) Priority Date	:NA
(33) Name of priority country	:NA
(86) International Application No	:NA
Filing Date	:NA
(87) International Publication No	: NA
(61) Patent of Addition to Application Number	:NA
Filing Date	:NA
(62) Divisional to Application Number	:NA
Filing Date	:NA

(71)**Name of Applicant :**
1)Chandigarh University
Address of Applicant :National Highway 95, Chandigarh-Ludhiana Highway, Mohali, Punjab 140413, India. Mohali Punjab India
2)Chandigarh University Technology Business Incubator
(72)**Name of Inventor :**
1)Imran Anwar

(57) Abstract :
An adjustable surface shaping device, comprises of an elongated body 1 crafted with a cavity that is installed with a pair of sliders 2 positioned over lateral sides of the cavity, a pair of sliders 2 for translating plurality of rings 3, plurality of rings 3 to position fingers of the user, an artificial intelligence based imaging unit 4 for capturing and processing images of the user's fingers, a motorized iris lid 5 to close in view of gripping the fingers, a touch interactive display panel 6 to enable the user to provide an input, plurality of telescopic rods 7 to extend and retract in a manner to regulate shape of plurality of plates, plurality of motorized hinge to regulate of shaped of the plates 9 in accordance with the user-specified shape, plurality of Light emitting diodes 10 to illuminate light in the surroundings to maintain appropriate visibility.

No. of Pages : 15 No. of Claims : 5

(12) PATENT APPLICATION PUBLICATION
(21) Application No.202411025566 A
(19) INDIA
(22) Date of filing of Application :28/03/2024
(43) Publication Date : 14/11/2025

(54) Title of the invention : CHILD ACCOMMODATION DEVICE FOR CROWDED PLACES

(51) International classification	:B60N0002280000, G06F0003010000, G08B0021020000, B60N0002200000, A47D0013020000	(71)**Name of Applicant :** **1)Shobhit Institute of Engineering & Technology (Deemed to-be University)** Address of Applicant :NH-58, Dulhera Marg, Modipuram, Meerut-250110, Uttar Pradesh, India. Meerut Uttar Pradesh India
(31) Priority Document No	:NA	(72)**Name of Inventor :** **1)R. P. Aggarwal**
(32) Priority Date	:NA	**2)Vijay Maheshwari**
(33) Name of priority country	:NA	**3)Nitin Kumar**
(86) International Application No	:NA	**4)Neha Rani**
Filing Date	:NA	
(87) International Publication No	: NA	
(61) Patent of Addition to Application Number	:NA	
Filing Date	:NA	
(62) Divisional to Application Number	:NA	
Filing Date	:NA	

(57) Abstract :
A child accommodation device for crowded places, comprising a wearable body 1 worn by the user to accommodate the child over torso region, a harness 3 accommodated around the waist of the user by a string 4 for securing the child, plurality of laser sensor detect dimension of the user and the child, an air compressor inflates an inflatable member secures the body 1 with torso, an ultrasonic sensor detects dimensions of the child's waist, a primary motorized roller 5 rotate to wrap a strap installed with harness 3, an imaging unit 6 captures images of the user and child, a motorized slider 7 translate the plate 2 to position the child above the head of user, secondary roller rotate for wrapping/unwrapping the string 4.

No. of Pages : 16 No. of Claims : 5

(12) PATENT APPLICATION PUBLICATION
(21) Application No.202411025567 A
(19) INDIA
(22) Date of filing of Application :28/03/2024
(43) Publication Date : 14/11/2025

(54) Title of the invention : CONVERTIBLE RESTING DEVICE

(51) International classification	:A63B0069360000, A47C0021040000, G06F0003160000, G10L0015220000, A61M0003020000	(71)**Name of Applicant :** **1)Shobhit Institute of Engineering & Technology (Deemed to-be University)** Address of Applicant :NH-58, Dulhera Marg, Modipuram, Meerut-250110, Uttar Pradesh, India. Meerut Uttar Pradesh India
(31) Priority Document No	:NA	(72)**Name of Inventor :** **1)Lomas Tomar**
(32) Priority Date	:NA	**2)Manisha Rastogi**
(33) Name of priority country	:NA	**3)Rishabh Chitranshi**
(86) International Application No	:NA	**4)Vinay Kumar**
Filing Date	:NA	
(87) International Publication No	: NA	
(61) Patent of Addition to Application Number	:NA	
Filing Date	:NA	
(62) Divisional to Application Number	:NA	
Filing Date	:NA	

(57) Abstract :
A convertible resting device, comprising a rectangular frame 1 developed to be positioned on a ground surface and configured with a stretchable cloth to function as a mat when frame 1 is in a collapsed state, microphone 2 for receiving voice commands of a user regarding actuation of device, motorized slider 3 to translate a chamber 4 attached with each of slider 3 and position chamber 4 at middle portion of frame 1, artificial intelligence-based imaging unit 5 for capturing images of in vicinity to frame 1 to detect dimensions of user, drawer arrangement 6 for accommodating user, L-shaped hydraulically operated rod 8 extend towards front portion of frame 1, electromagnet 9 for creating a chair-like seat for accommodation of user, hinge joint 11 to tilt and deploy flaps 10 and a motorized roller 12 to rotate for unwrapping sheet over flaps 10 for comfortable seating arrangement 6 for user.

No. of Pages : 15 No. of Claims : 4

(12) PATENT APPLICATION PUBLICATION
(21) Application No.202411025568 A
(19) INDIA
(22) Date of filing of Application :28/03/2024
(43) Publication Date : 14/11/2025

(54) Title of the invention : CONVERTIBLE MOBILITY AID DEVICE FOR INJURED PERSON

(51) International classification	:A61H0003000000, A61H0003040000, A61H0003020000, A61H0003060000, G03H0001220000
(31) Priority Document No	:NA
(32) Priority Date	:NA
(33) Name of priority country	:NA
(86) International Application No	:NA
Filing Date	:NA
(87) International Publication No	: NA
(61) Patent of Addition to Application Number	:NA
Filing Date	:NA
(62) Divisional to Application Number	:NA
Filing Date	:NA

(71)**Name of Applicant :**
1)Shobhit Institute of Engineering & Technology (Deemed to-be University)
Address of Applicant :NH-58, Dulhera Marg, Modipuram, Meerut-250110, Uttar Pradesh, India. Meerut Uttar Pradesh India
(72)**Name of Inventor :**
1)Jayanand Manjhi
2)Manisha Rastogi
3)Vinay Kumar
4)Rishabh Chitranshi

(57) Abstract :
A convertible mobility aid device for injured person, comprising a pair of rectangular frames 1 installed with a curved-shaped member 2 positioned in contact with underarms of an injured user, a handle 3 configured with the frames 1 gripped by a user for handling the frames 1, an artificial intelligence-based imaging unit 4 mounted on the frames 1 for detecting the user's height, a microphone 5 positioned on the frames 1 to give voice commands for converting the frames 1 to wheelchair, plurality of extendable plates 6 installed with the frames 1 to construct an L-shaped structure for allowing the user to sit over the structure and a holographic projection unit 7 is mounted on the frames 1 to guide the user in walking on the ground surface.

No. of Pages : 17 No. of Claims : 7

(12) PATENT APPLICATION PUBLICATION
(21) Application No.202411025571 A
(19) INDIA
(22) Date of filing of Application :28/03/2024
(43) Publication Date : 14/11/2025

(54) Title of the invention : BOARDING/DE-BOARDING ASSISTIVE DEVICE FOR WATERCRAFTS

(51) International classification	:G05D0001020000, G06Q0010020000, B63B0027140000, G06Q0050300000, G06Q0030000000	
(31) Priority Document No	:NA	
(32) Priority Date	:NA	
(33) Name of priority country	:NA	
(86) International Application No	:NA	
Filing Date	:NA	
(87) International Publication No	: NA	
(61) Patent of Addition to Application Number	:NA	
Filing Date	:NA	
(62) Divisional to Application Number	:NA	
Filing Date	:NA	

(71)**Name of Applicant :**
1)Shobhit Institute of Engineering & Technology (Deemed to-be University)
Address of Applicant :NH-58, Dulhera Marg, Modipuram, Meerut-250110, Uttar Pradesh, India. Meerut Uttar Pradesh India
(72)**Name of Inventor :**
1)R. P. Aggarwal
2)Anil Joshi
3)Nimra
4)Neha Rani

(57) Abstract :
A boarding/de-boarding assistive device for watercrafts, comprising a curved-shaped platform 1 positioned over shore of a water body, an inflated tube 2 is arranged on periphery of platform 1 to remain on surface of the water body, an imaging unit 4 to detect dimensions and shape of approaching watercrafts, plurality of motorized hinge joints 3 to modulate shape as per detected dimensions of watercraft, a proximity sensor to monitor presence of approaching watercraft, a triangular-shaped member 6 over front portion of the platform 1 for aiding in smooth accommodation of the approaching watercraft over platform 1, a touch sensor to detect presence of watercraft over member 6 , plurality of motorized roller 7 arranged on bottom portion of platform 1 and member 6 to rotate for translating the member 6 securely over platform 1, an ultrasonic sensor to detect dimensions of the user accommodated over watercraft.

No. of Pages : 20 No. of Claims : 4

(12) PATENT APPLICATION PUBLICATION
(21) Application No.202411025497 A
(19) INDIA
(22) Date of filing of Application :28/03/2024
(43) Publication Date : 14/11/2025

(54) Title of the invention : BOAT DOCKING ASSISTANCE DEVICE

(51) International classification	:B63B0017020000, B62H0003000000, G08G0001160000, H01R0043000000, B63B0059020000	(71)**Name of Applicant :** **1)Chandigarh Group of Colleges** Address of Applicant :Landran Kharar Banur Highway, Sector 112, Sahibzada Ajit Singh Nagar, Landran, Mohali, Punjab-140307, India. Mohali Punjab India
(31) Priority Document No	:NA	(72)**Name of Inventor :**
(32) Priority Date	:NA	**1)Dr. Chamkaur Singh**
(33) Name of priority country	:NA	**2)Navneet Katoch**
(86) International Application No	:NA	**3)Akanksha Chopra**
Filing Date	:NA	**4)Anmol Daim**
(87) International Publication No	: NA	
(61) Patent of Addition to Application Number	:NA	
Filing Date	:NA	
(62) Divisional to Application Number	:NA	
Filing Date	:NA	

(57) Abstract :
A boat docking assistance device, comprising a frame 1 developed to be installed in proximity of boat which needs to be docked, plurality of suction units 2 installed on the frame 1 that makes a firm grip over the boat, an artificial intelligence enabled image capturing module 3 installed on the frame 1 boat to determine if the suction units 2 are firmly attached with the boat, multiple motorized clamping units 4 installed on the frame 1 that gets locked with the boat in a secured manner and a sharpened blade 5 integrated with the frame 1 to penetrate deep inside a surface where the boat is to be docked thereby enabling proper fixation of rods within the surface.

No. of Pages : 13 No. of Claims : 4

(12) PATENT APPLICATION PUBLICATION
(21) Application No.202411025498 A
(19) INDIA
(22) Date of filing of Application :28/03/2024
(43) Publication Date : 14/11/2025

(54) Title of the invention : AUTOMATED BUBBLE WRAP FABRICATION DEVICE

(51) International classification	:G06F0003041000, B33Y0030000000, G02B0021360000, B65H0016000000, B65H0003480000	(71)**Name of Applicant :** **1)Chandigarh Group of Colleges** Address of Applicant :Landran Kharar Banur Highway, Sector 112, Sahibzada Ajit Singh Nagar, Landran, Mohali, Punjab-140307, India. Mohali Punjab India
(31) Priority Document No	:NA	(72)**Name of Inventor :**
(32) Priority Date	:NA	**1)Dr. Tejinder Pal Singh Brar**
(33) Name of priority country	:NA	**2)Dr. Simrat Kaur**
(86) International Application No	:NA	**3)Sahil Choudhary**
Filing Date	:NA	**4)Teena Bali**
(87) International Publication No	: NA	
(61) Patent of Addition to Application Number	:NA	
Filing Date	:NA	
(62) Divisional to Application Number	:NA	
Filing Date	:NA	

(57) Abstract :
An automated bubble wrap fabrication device, comprising a platform 1 developed to be positioned on a fixed surface, touch interactive display panel 2 that is accessed by a user for providing input regarding length of a bubble wrap sheet to be fabricated, motorized roller 3 to rotate for unwinding a double plastic sheet coiled on the roller 3, artificial intelligence-based imaging unit for capturing images of the platform 1 to determine length of sheet, pair of vertical support 4 integrated with a motorized scissor lift arrangements 5 for positioning a bar 6 for getting aligned on the sheets, heating unit 7 for pressing the bar 6 against surface of the sheets for fusing pressed section of the sheets, air compressor 9 for filling air in the pocket and motorized clipper 10 to grip and fuse the lower end of the sheet in order to fabricate the bubble wrap.

No. of Pages : 16 No. of Claims : 5

(12) PATENT APPLICATION PUBLICATION
(21) Application No.202411025499 A
(19) INDIA
(22) Date of filing of Application :28/03/2024
(43) Publication Date : 14/11/2025

(54) Title of the invention : AUTOMATED POULTRY FARM SURFACE CLEANING DEVICE

(51) International classification	:G01S0017890000, B25J0011000000, E05F0015630000, G06F0003041000, A01K0031220000
(31) Priority Document No	:NA
(32) Priority Date	:NA
(33) Name of priority country	:NA
(86) International Application No	:NA
Filing Date	:NA
(87) International Publication No	: NA
(61) Patent of Addition to Application Number	:NA
Filing Date	:NA
(62) Divisional to Application Number	:NA
Filing Date	:NA

(71)**Name of Applicant :**
1)Chandigarh Group of Colleges
Address of Applicant :Landran Kharar Banur Highway, Sector 112, Sahibzada Ajit Singh Nagar, Landran, Mohali, Punjab-140307, India. Mohali Punjab India
(72)**Name of Inventor :**
1)Dr. Chamkaur Singh
2)Rajinder Kumar
3)Rahul Khurana
4)Vishal Barwal

(57) Abstract :
An automated poultry farm surface cleaning device, comprises of a body 1 developed to be positioned on a ground surface, a pair of motorized omnidirectional wheels 2 arranged underneath the body 1 for providing movement, an artificial intelligence-based imaging unit 3 mounted on the body 1 for capturing and processing images, a touch interactive display panel 4 mapped on the body 1 for displaying the evaluated mapping, a LiDAR (Light Detection Ranging) sensor 5 installed on the body 1 for detecting feathers, plurality of electronic nozzles 6 installed on the body 1 via a robotic arm 7, an electric lighter paired 8 with the nozzles to lighten the nozzles, a motorized two axis lead screw 9 configured on the body 1 to translate an extendable horizontal blade 11, a motorized slider crank 10 configured between the arrangement and blade 11 for providing linear reciprocatory movement to the blade 11.

No. of Pages : 17 No. of Claims : 4

(12) PATENT APPLICATION PUBLICATION
(21) Application No.202411025500 A
(19) INDIA
(22) Date of filing of Application :28/03/2024
(43) Publication Date : 14/11/2025

(54) Title of the invention : ADAPTABLE FOOT SUPPORTING DEVICE

(51) International classification	:A61H0015000000, H04W0004800000, A61H0003000000, B65G0023080000, A43B0005160000	(71)**Name of Applicant :** **1)Chandigarh Group of Colleges** Address of Applicant :Landran Kharar Banur Highway, Sector 112, Sahibzada Ajit Singh Nagar, Landran, Mohali, Punjab-140307, India. Mohali Punjab India
(31) Priority Document No	:NA	(72)**Name of Inventor :**
(32) Priority Date	:NA	**1)Dr. Komal Saini**
(33) Name of priority country	:NA	**2)Dr. Saurabh Sharma**
(86) International Application No	:NA	**3)Dr. Gurpreet Kandav**
Filing Date	:NA	**4)Komal**
(87) International Publication No	: NA	**5)Mamik Verma**
(61) Patent of Addition to Application Number	:NA	
Filing Date	:NA	
(62) Divisional to Application Number	:NA	
Filing Date	:NA	

(57) Abstract :
An adaptable foot supporting device, comprising a wearable component 1 developed to be worn by a user on the user's foot prior wearing a footwear, cushioned pad 2 for allowing the user to rest the user's forefoot on the pad 2 in view of providing comfort to the user, a pair of curved inflatable patches 3 to get inflated dimensions of the user's foot, , padded cup 4 for supporting heel of the user's foot, pair of extendable links 5 to extend for getting positioned behind ankle of the user, motorized ball and socket joint 7 to provide rotational movement to balls 6 for providing massage behind the user's ankle, motorized roller 8 to rotate for tightening/loosening a looped strap and roller 8 for providing support to the user's foot while wearing the component 1.

No. of Pages : 15 No. of Claims : 3

(12) PATENT APPLICATION PUBLICATION
(21) Application No.202411025473 A
(19) INDIA
(22) Date of filing of Application :28/03/2024
(43) Publication Date : 14/11/2025

(54) Title of the invention : AUTOMATED SLIDING RAIL CLEANING DEVICE FOR WINDOWS

(51) International classification	:G10L0015220000, E06B0003460000, B08B0001040000, B60L0053140000, B24B0041020000	(71)**Name of Applicant :** **1)Chandigarh University** Address of Applicant :National Highway 95, Chandigarh-Ludhiana Highway, Mohali, Punjab 140413, India. Mohali Punjab India **2)Chandigarh University Technology Business Incubator**
(31) Priority Document No	:NA	(72)**Name of Inventor :**
(32) Priority Date	:NA	**1)Himanshu Arora**
(33) Name of priority country	:NA	
(86) International Application No	:NA	
Filing Date	:NA	
(87) International Publication No	: NA	
(61) Patent of Addition to Application Number	:NA	
Filing Date	:NA	
(62) Divisional to Application Number	:NA	
Filing Date	:NA	

(57) Abstract :
An automated sliding rail cleaning device for windows comprises of a platform 1 positioned over a fixed surface in proximity to a sliding window, a microphone 2 is installed over the platform 1 to receive voice command of a user regrading cleaning of sliding rail of the window, an imaging unit 8 to determines dimensions of the sliding rail, a dust sensor to determine presence of dust in the sliding rail, a motorized roller 7 wrapped with a sheet installed over the platform 1 to rotate and unwrap the sheet that is gripped by a pair of robotic grippers installed over the platform 1 to grip and align the sheet around the sliding rail to prevent spillage of dust in debris, a depth sensor to monitor depth of the sliding rail and an air blower 5 to blow air towards the detected moisture in view of drying the moisture.

No. of Pages : 18 No. of Claims : 5

(12) PATENT APPLICATION PUBLICATION
(21) Application No.202411025474 A
(19) INDIA
(22) Date of filing of Application :28/03/2024
(43) Publication Date : 14/11/2025

(54) Title of the invention : KEYBOARD OPERATING ASSISTIVE DEVICE

(51) International classification	:G06F0003048860, H04M0001020000, G06F0001160000, A61F0013560000, G10L0015260000	(71)**Name of Applicant :** **1)Chandigarh University** Address of Applicant :National Highway 95, Chandigarh-Ludhiana Highway, Mohali, Punjab 140413, India. Mohali Punjab India **2)Chandigarh University Technology Business Incubator**
(31) Priority Document No	:NA	(72)**Name of Inventor :**
(32) Priority Date	:NA	**1)Raman Kumar**
(33) Name of priority country	:NA	
(86) International Application No	:NA	
Filing Date	:NA	
(87) International Publication No	: NA	
(61) Patent of Addition to Application Number	:NA	
Filing Date	:NA	
(62) Divisional to Application Number	:NA	
Filing Date	:NA	

(57) Abstract :
A keyboard operating assistive device, comprising of a first platform 1 installed with a pair of U-shaped members 2 developed to be accommodated around edge of a fixed surface, a second platform 4 installed on the first platform 1 for accommodating a keyboard, a microphone 5 for giving voice commands for securing the first platform 1 with the fixed surface, multiple pneumatic blocks 6 to extend/retract for securing the members 2 with the fixed surface, an imaging unit 7 mounted on the second platform 4 for detecting dimensions of the keyboard, multiple motorized sliders 8 for translating the cuboidal for gripping the keyboard in a secured manner, a pair of telescopically operated rods 10 to extend/retract for lifting/lower the second platform 4 , a pair of motorized sliding for translating the rods 10 in a manner to align the second platform 4 along with the keyboard with the screen.

No. of Pages : 18 No. of Claims : 6

(12) PATENT APPLICATION PUBLICATION
(21) Application No.202411025481 A
(19) INDIA
(22) Date of filing of Application :28/03/2024
(43) Publication Date : 14/11/2025

(54) Title of the invention : ADJUSTABLE VOID-FILLING ASSISTIVE DEVICE FOR WALLS

(51) International classification	:H01L0021020000, B33Y0040000000, B41J0002010000, B33Y0010000000, E04F0013080000
(31) Priority Document No	:NA
(32) Priority Date	:NA
(33) Name of priority country	:NA
(86) International Application No	:NA
Filing Date	:NA
(87) International Publication No	: NA
(61) Patent of Addition to Application Number	:NA
Filing Date	:NA
(62) Divisional to Application Number	:NA
Filing Date	:NA

(71)**Name of Applicant :**
1)Chandigarh Group of Colleges
Address of Applicant :Landran Kharar Banur Highway, Sector 112, Sahibzada Ajit Singh Nagar, Landran, Mohali, Punjab-140307, India. Mohali Punjab India
(72)**Name of Inventor :**
1)Dr. Tejinder Pal Singh Brar
2)Dr. Inderpreet Kaur
3)Aditya Chauhan
4)Kanika Sharma

(57) Abstract :
An adjustable void-filling assistive device for walls, comprising a body 1 positioned on a ground surface via plurality of wheels 2, an artificial intelligence-based imaging unit 3 determines position of gaps in tiles of wall, plurality of telescopically operated rods 4 align platform with evaluated portions on wall, a multi-sectioned chamber 5 stores raw materials, an iris lid 6 dispenses materials in a mixing container 7, a motorized stirrer 8 obtains required mixture, an electronically controlled nozzle 9 via a telescopically operated link 10 for positioning nozzle 9 to dispense mixture for filling gaps of wall, and a circular slider 11 provides translation to a motorized flap 12 for finishing filled mixture for allowing settling of mixture in between gaps, thereby assisting user in mending walls.

No. of Pages : 16 No. of Claims : 3

(12) PATENT APPLICATION PUBLICATION
(21) Application No.202411025482 A
(19) INDIA
(22) Date of filing of Application :28/03/2024
(43) Publication Date : 14/11/2025

(54) Title of the invention : AUTOMATED POLYURETHANE FOAM COATING DEVICE

(51) International classification	:C09D 175/04, B08B 1/00, C08L 75/04
(31) Priority Document No	:NA
(32) Priority Date	:NA
(33) Name of priority country	:NA
(86) International Application No	:NA
Filing Date	:NA
(87) International Publication No	: NA
(61) Patent of Addition to Application Number	:NA
Filing Date	:NA
(62) Divisional to Application Number	:NA
Filing Date	:NA

(71)**Name of Applicant :**
1)Chandigarh Group of Colleges
Address of Applicant :Landran Kharar Banur Highway, Sector 112, Sahibzada Ajit Singh Nagar, Landran, Mohali, Punjab-140307, India. Mohali Punjab India
(72)**Name of Inventor :**
1)Dr. Sandhya Jaiswal
2)Dr. Supriya Agnihotri
3)Monika Sharma
4)Aditee Sharma
5)Hemant Jethi

(57) Abstract :
An automated polyurethane foam coating device comprises a body 1 installed with an artificial intelligence-based imaging unit 2 generate 3D map of the enclosure, a touch interactive display panel 3 for user input, multiple motorized omnidirectional wheels 4 moves the body, an ultrasonic sensor integrated on the body 1 and synced with the imaging unit for monitoring dimensions of the user-selected portion, a telescopically operated rod 5 is configured on the body 1 for positioning a brush 6 integrated on the rod, a motorized ball and socket 7 integrated in between the brush and rod to provide angular movement to the brush, a plate 8 integrated with plurality of flaps 9 interconnected by means of multiple hinges 10 arranged on the body 1 via an extendable L-shaped link 11, and an electronically controlled nozzle 12 connected with a chamber 13 stored with polyurethane foam and configured on the body.

No. of Pages : 17 No. of Claims : 6

(12) PATENT APPLICATION PUBLICATION
(21) Application No.202411025508 A
(19) INDIA
(22) Date of filing of Application :28/03/2024
(43) Publication Date : 14/11/2025

(54) Title of the invention : ADAPTABLE WALKING ASSISTIVE DEVICE FOR SNOWY SURFACES

(51) International classification	:H01Q0001220000, G01C0021160000, G06F0003160000, A61H0003020000, A61H0003000000
(31) Priority Document No	:NA
(32) Priority Date	:NA
(33) Name of priority country	:NA
(86) International Application No	:NA
Filing Date	:NA
(87) International Publication No	: NA
(61) Patent of Addition to Application Number	:NA
Filing Date	:NA
(62) Divisional to Application Number	:NA
Filing Date	:NA

(71)**Name of Applicant :**
1)Chandigarh Group of Colleges
Address of Applicant :Landran Kharar Banur Highway, Sector 112, Sahibzada Ajit Singh Nagar, Landran, Mohali, Punjab-140307, India. Mohali Punjab India
(72)**Name of Inventor :**
1)Dr. Inderpreet Kaur
2)Rajinder Kumar
3)Ridhima Jain
4)Manya Bhasin

(57) Abstract :
An adaptable walking assistive device for snowy surfaces comprises an elongated body 1 integrated with a handle 4 accessed by a user for gripping on the body 1, an artificial intelligence-based imaging unit determine height of the user, a linear actuator integrated in the body 1 to extend/retract for positioning a second 3 end on a ground surface, a sensing module monitors parameters of hardness and friction of the surface, plurality of telescopically operated pins 5 are integrated at the second 3 end to extend in a downward direction, an accelerometer installed on the body 1 for monitoring movements of the user, a motorized slider 6 integrated in between the second 3 end and pins 5 to translate the pins 5, a gyroscope monitors angle of the body 1 with respect to the surface, and a speaker 7 integrated on the body 1 to produce audio notification.

No. of Pages : 17 No. of Claims : 5

(12) PATENT APPLICATION PUBLICATION
(21) Application No.202411025509 A
(19) INDIA
(22) Date of filing of Application :28/03/2024
(43) Publication Date : 14/11/2025

(54) Title of the invention : HAND-HELD NOSE PIN REMOVAL DEVICE

(51) International classification	:A61B0017340000, G03H0001220000, G06F0001323100, G06F0003160000, G06F0003010000	(71)**Name of Applicant :** **1)Chandigarh Group of Colleges** Address of Applicant :Landran Kharar Banur Highway, Sector 112, Sahibzada Ajit Singh Nagar, Landran, Mohali, Punjab-140307, India. Mohali Punjab India
(31) Priority Document No	:NA	(72)**Name of Inventor :**
(32) Priority Date	:NA	**1)Diksha Verma**
(33) Name of priority country	:NA	**2)Priyanka Nehra**
(86) International Application No	:NA	**3)Aarti Dhiman**
Filing Date	:NA	
(87) International Publication No	: NA	
(61) Patent of Addition to Application Number	:NA	
Filing Date	:NA	
(62) Divisional to Application Number	:NA	
Filing Date	:NA	

(57) Abstract :
A hand-held nose pin removal device, comprising a cylindrical shaped body 1 having a first portion 2 and second portion 3, developed to be hand held by a user in proximity to nose, handle 4 for providing grip to the user while positioning the body 1 in proximity to the nose, artificial intelligence-based imaging unit 5 for capturing multiple images in vicinity to the body 1 to detect dimensions and presence of the user nose pin, holographic projection unit 6 to project a holographic image on the user nose in order to guide the user to position the body 1 , robotic arm 7 for positioning a C-shaped member 9 attached with the robotic arm 7 in proximity to the nose pin to extend/ retract for gripping the nose pin and a storage chamber 8 to remove nose pin upon removing the nose pin from user's nose.

No. of Pages : 14 No. of Claims : 3

(12) PATENT APPLICATION PUBLICATION
(21) Application No.202411025510 A
(19) INDIA
(22) Date of filing of Application :28/03/2024
(43) Publication Date : 14/11/2025

(54) Title of the invention : ADAPTABLE WIG APPLYING DEVICE

(51) International classification	:A41G0003000000, B65G0023080000, A61B0017000000, B23K0026700000, A61B0017320700	(71)**Name of Applicant :** **1)Chandigarh Group of Colleges** Address of Applicant :Landran Kharar Banur Highway, Sector 112, Sahibzada Ajit Singh Nagar, Landran, Mohali, Punjab-140307, India. Mohali Punjab India
(31) Priority Document No	:NA	(72)**Name of Inventor :**
(32) Priority Date	:NA	**1)Priyanka Nehra**
(33) Name of priority country	:NA	**2)Jasvir Kaur**
(86) International Application No	:NA	**3)Preeti Ban**
Filing Date	:NA	
(87) International Publication No	: NA	
(61) Patent of Addition to Application Number	:NA	
Filing Date	:NA	
(62) Divisional to Application Number	:NA	
Filing Date	:NA	

(57) Abstract :
An adaptable wig applying device, comprising a body 1 designed to positioned on user's head, an imaging unit 2 installed on body 1 to determine user's upper body 1 dimension, motorized clamps 3 arranged underneath the body 1 to extend for positioning clamps 3 on user's shoulder, a multi-sectioned chamber 4 is arranged inside the body 1 and accessed by a pair of robotic arms 5 installed inside the body 1 for gripping the wig from chamber 4; a container 6 arranged inside body 1 and integrated with an electronically controlled nozzle 7 to dispense an adhesive stored in the container 6 on artificial hair, a motorized roller 8 arranged on the body 1 by via an extendable links for positioning the roller 8 over the user's head to applies pressure on the positioned wig to affix on the user's head.

No. of Pages : 15 No. of Claims : 3

(12) PATENT APPLICATION PUBLICATION
(21) Application No.202411025511 A
(19) INDIA
(22) Date of filing of Application :28/03/2024
(43) Publication Date : 14/11/2025

(54) Title of the invention : AUTOMATED DRAWSTRING INSERTING DEVICE

(51) International classification	:B61B0001020000, B25J0009160000, B25J0015000000, B25J0011000000, B65F0001000000	(71)**Name of Applicant :** **1)Chandigarh Group of Colleges** Address of Applicant :Landran Kharar Banur Highway, Sector 112, Sahibzada Ajit Singh Nagar, Landran, Mohali, Punjab-140307, India. Mohali Punjab India
(31) Priority Document No	:NA	(72)**Name of Inventor :**
(32) Priority Date	:NA	**1)Dr. Seema Rani**
(33) Name of priority country	:NA	**2)Diksha Verma**
(86) International Application No	:NA	**3)Sarabjit Kaur**
Filing Date	:NA	**4)Arin Dhorta**
(87) International Publication No	: NA	
(61) Patent of Addition to Application Number	:NA	
Filing Date	:NA	
(62) Divisional to Application Number	:NA	
Filing Date	:NA	

(57) Abstract :
An automated drawstring inserting device, comprises of a platform 1 positioned over a fixed surface, an artificial intelligence based imaging unit 2 installed over the platform 1 to determine type of the cloth, a pair grippers 3 installed with the platform 1 by means of an inverted L-shaped telescopic rod to grip the clothing to position eyelets of drawstring channel, a touch interactive display panel 4 installed over the platform 1 to select a particular color of the drawstring that is to be inserted, a motorized cutter 6 configured over the platform 1 to cut the drawstring, a robotic arm installed over the platform 1 to insert multiple links arranged with the arm in the eyelet(s), a pair of robotic clamps are installed over the platform 1 to withdraw one of the drawstring threader and engage the cut drawstring in view of inserting the drawstring in the drawstring channel.

No. of Pages : 18 No. of Claims : 4

(12) PATENT APPLICATION PUBLICATION
(21) Application No.202411025512 A
(19) INDIA
(22) Date of filing of Application :28/03/2024
(43) Publication Date : 14/11/2025

(54) Title of the invention : WASTE COLLECTION ASSISTIVE DEVICE

(51) International classification	:A61M0001000000, E01H0001120000, B30B0009300000, A61B0017000000, A61H0001020000
(31) Priority Document No	:NA
(32) Priority Date	:NA
(33) Name of priority country	:NA
(86) International Application No	:NA
Filing Date	:NA
(87) International Publication No	: NA
(61) Patent of Addition to Application Number	:NA
Filing Date	:NA
(62) Divisional to Application Number	:NA
Filing Date	:NA

(71)**Name of Applicant :**
1)Chandigarh Group of Colleges
Address of Applicant :Landran Kharar Banur Highway, Sector 112, Sahibzada Ajit Singh Nagar, Landran, Mohali, Punjab-140307, India. Mohali Punjab India
(72)**Name of Inventor :**
1)Dr. Amresh Kumar
2)Dr. Dinesh Arora
3)Satwinder Singh
4)Prabhdeep Singh
5)Simranjot Singh
6)Devesh
7)Akash chaudhary
8)Sankrt Chabra

(57) Abstract :
A waste collection assistive device comprising a circular plate 1 crafted with a handle that is gripped by a user to position plate 1 in proximity to a bag in which waste is to be collected, an artificial intelligence based imaging unit 2 installed over plate 1 to determines location of mouth portion of the bag, an motorized slid able lid 3 crafted over the plate 1 to open and create a passage to enable user to insert waste within bag, an extendable robotic clamp 4 installed over plate 1 to extend and grip waste a hollowed telescopic conduit 5 to extend and position over waste, a suction unit connected with conduit 5 to create a negative pressure to withdraw waste from ground surface and collect in the bag.

No. of Pages : 16 No. of Claims : 5

(12) PATENT APPLICATION PUBLICATION
(21) Application No.202411025513 A
(19) INDIA
(22) Date of filing of Application :28/03/2024
(43) Publication Date : 14/11/2025

(54) Title of the invention : ADAPTABLE GOLF-BALLS RETRIEVING ASSISTIVE DEVICE

(51) International classification	:H04W0004020000, G01N0021950000, G01N0021552000, G02B0027640000, B25J0015060000	(71)**Name of Applicant :** **1)Chandigarh Group of Colleges** Address of Applicant :Landran Kharar Banur Highway, Sector 112, Sahibzada Ajit Singh Nagar, Landran, Mohali, Punjab-140307, India. Mohali Punjab India
(31) Priority Document No	:NA	(72)**Name of Inventor :**
(32) Priority Date	:NA	**1)Shailee Thakur**
(33) Name of priority country	:NA	**2)Kirti Sharma**
(86) International Application No	:NA	**3)Ayush Jain**
Filing Date	:NA	
(87) International Publication No	: NA	
(61) Patent of Addition to Application Number	:NA	
Filing Date	:NA	
(62) Divisional to Application Number	:NA	
Filing Date	:NA	

(57) Abstract :
An adaptable golf-balls retrieving assistive device, comprises of a cylindrical frame 1 having a first and second portion, plurality of suction cups 2 for adhering to the surface of the pit, an artificial intelligence-based imaging unit 3 for capturing and processing multiple images in vicinity of the frame 1, for capturing and processing multiple images in vicinity of the frame 1, plurality of LED's lights 5 for illuminating light in view of increasing visibility to a user, a count proximity sensor to determine count of the hit balls in the pit during the game, a circular ring 7 arranged by means of a pair of electromagnetic springs 8 to create an optimum magnetic field for getting retracted.

No. of Pages : 15 No. of Claims : 4

(12) PATENT APPLICATION PUBLICATION
(21) Application No.202411025514 A
(19) INDIA
(22) Date of filing of Application :28/03/2024
(43) Publication Date : 14/11/2025

(54) Title of the invention : ADAPTABLE LUGGAGE LOADING/UNLOADING ASSISTIVE DEVICE

(51) International classification	:G06F0003041000, A45C0013260000, H04N0007180000, B60R0009042000, B65G0067080000
(31) Priority Document No	:NA
(32) Priority Date	:NA
(33) Name of priority country	:NA
(86) International Application No	:NA
Filing Date	:NA
(87) International Publication No	: NA
(61) Patent of Addition to Application Number	:NA
Filing Date	:NA
(62) Divisional to Application Number	:NA
Filing Date	:NA

(71)**Name of Applicant :**
1)Chandigarh Group of Colleges
Address of Applicant :Landran Kharar Banur Highway, Sector 112, Sahibzada Ajit Singh Nagar, Landran, Mohali, Punjab-140307, India. Mohali Punjab India
(72)**Name of Inventor :**
1)Diksha Verma
2)Amrita Saini
3)Yukta

(57) Abstract :
An adaptable luggage loading/unloading assistive device, comprising frame 1 developed to be positioned on a ground surface, pair of horizontal rods 2 for supporting the frame 1 on the surface, vertical support 3 assembled with an extendable platform 4 that is accessed by a user for accommodating a luggage on, touch interactive display panel 5 is accessed by user for providing input regarding a vehicle 3 where the luggage is to be loaded, artificial intelligence-based imaging unit 6 for capturing multiple images in vicinity of the frame 1, motorized wheels 7 arranged to move the frame 1, motorized sliding units 8 for translating the platform 4 in, drawer arrangement 9 to extend the platform 4 for positioning the platform 4 over the vehicle's carriage and a motorized hinge joint 10 to tilt portion of the platform 4 for deploying the accommodated luggage on the vehicle carriage section or support 3.

No. of Pages : 15 No. of Claims : 4

(12) PATENT APPLICATION PUBLICATION
(21) Application No.202411025515 A
(19) INDIA
(22) Date of filing of Application :28/03/2024
(43) Publication Date : 14/11/2025

(54) Title of the invention : AUTOMATED OBJECT HOLDING DEVICE

(51) International classification	:B25J0015000000, G05D0001020000, G01S0015931000, B25J0015100000, G01S0007521000	(71)**Name of Applicant :** **1)Chandigarh Group of Colleges** Address of Applicant :Landran Kharar Banur Highway, Sector 112, Sahibzada Ajit Singh Nagar, Landran, Mohali, Punjab-140307, India. Mohali Punjab India
(31) Priority Document No	:NA	(72)**Name of Inventor :** **1)Dr. Seema Rani**
(32) Priority Date	:NA	**2)Diksha Verma**
(33) Name of priority country	:NA	**3)Naina Jariyal**
(86) International Application No	:NA	
Filing Date	:NA	
(87) International Publication No	: NA	
(61) Patent of Addition to Application Number	:NA	
Filing Date	:NA	
(62) Divisional to Application Number	:NA	
Filing Date	:NA	

(57) Abstract :
An automated object holding device, comprising an elongated plate 1 positioned over space between center console and passenger, a cavity 2, an artificial intelligence-based imaging unit 3 to determine dimensions of the seat belt unit, a motorized iris lid 4 to close gripping the seat belt unit, a laser sensor to monitor distance between plate 1, plurality of telescopic rods 5, suction unit 6 to affix plate, plurality of weight sensors to monitor presence of any object, an ultrasonic sensor to determine dimension of object, an inverted L-shaped telescopic gripper 7 to grip and position the object, plurality of motorized iris opening for withdrawing object from the plate 1, an air compressor to inflate the member, a proximity sensor to monitor presence of any obstacle in path, a speaker 9 to notify user regarding detected obstacle, a motorized ball and socket joint 8 to provide multidirectional movement.

No. of Pages : 18 No. of Claims : 7

(12) PATENT APPLICATION PUBLICATION
(21) Application No.202411025516 A
(19) INDIA
(22) Date of filing of Application :28/03/2024
(43) Publication Date : 14/11/2025

(54) Title of the invention : ADJUSTABLE USB CABLES HANDLING DEVICE FOR FOUR-WHEELERS

(51) International classification	:F04D0013100000, H02G0003040000, B25J0015000000, B66F0009060000, H02G0003020000	(71)**Name of Applicant :** **1)Chandigarh Group of Colleges** Address of Applicant :Landran Kharar Banur Highway, Sector 112, Sahibzada Ajit Singh Nagar, Landran, Mohali, Punjab-140307, India. Mohali Punjab India
(31) Priority Document No	:NA	(72)**Name of Inventor :** **1)Sukhmani Sandhu**
(32) Priority Date	:NA	**2)Shailee Thakur**
(33) Name of priority country	:NA	**3)Afsana**
(86) International Application No	:NA	
Filing Date	:NA	
(87) International Publication No	: NA	
(61) Patent of Addition to Application Number	:NA	
Filing Date	:NA	
(62) Divisional to Application Number	:NA	
Filing Date	:NA	

(57) Abstract :
An adjustable USB cables handling device for four-wheelers, comprising a plate 1 installed on a fixed surface, underneath handbrake portion of a four-wheeler via plurality of suction cups 7, an artificial intelligence-based imaging unit 2 determines positioning of a cable suspended inside four-wheeler, two motorized grippers 3 are installed on plate 1 to grip on end of cable, a cylindrical member 4 engraved with multiple circular grooves that are accessed by grippers 3 for engaging cables along grooves for attaining a coiled state of cables, plurality of motorized clippers 5 grip on coiled cables to store cables inside four-wheeler, an ultrasonic sensor determines any turns on cables and if detected then grippers 3 insert cables in a pair of motorized rollers 6, and followed by actuation of rollers 6 to rotate for straightening cables before being coiled in member 4.

No. of Pages : 14 No. of Claims : 3

(12) PATENT APPLICATION PUBLICATION
(21) Application No.202411025517 A
(19) INDIA
(22) Date of filing of Application :28/03/2024
(43) Publication Date : 14/11/2025

(54) Title of the invention : HAIR PATCH MANUFACTURING ASSISTIVE DEVICE

(51) International classification	:A61K0036736000, A61K0036886000, A61K0036896000, A24F0040440000, A01M0001200000	(71)**Name of Applicant :** **1)Chandigarh Group of Colleges** Address of Applicant :Landran Kharar Banur Highway, Sector 112, Sahibzada Ajit Singh Nagar, Landran, Mohali, Punjab-140307, India. Mohali Punjab India
(31) Priority Document No	:NA	(72)**Name of Inventor :** **1)Mannat Bains**
(32) Priority Date	:NA	**2)Jasvir Kaur**
(33) Name of priority country	:NA	**3)Kanika**
(86) International Application No	:NA	
Filing Date	:NA	
(87) International Publication No	: NA	
(61) Patent of Addition to Application Number	:NA	
Filing Date	:NA	
(62) Divisional to Application Number	:NA	
Filing Date	:NA	

(57) Abstract :
A hair patch manufacturing assistive device, comprising a hollow cylindrical body 1 configured with multiple supporting rods 2 positioned on a fixed surface, a multi-sectioned chamber 3 stores almonds, oil and cotton, a display panel 4 accessed by the user to input details regarding a quantity of hair patch the user desires, a pair of robotic grippers 5 extracts the evaluated amount from the chamber 3, an opening for filling combustible fuel inside the container 6, an ultrasonic sensor detects the thickness of the wick, a motorized iris aperture closes to grip the wick, an electric igniter 7 ignites the end portion of the wick, a metallic plate accumulates black texture smoke generated from combustion of almonds, cotton and oil, an imaging unit 8 captures images of surroundings, a motorized horizontal blade 9 scrap the layer from the plate, an electronic nozzle 11 stores aloe vera solution.

No. of Pages : 17 No. of Claims : 4

(12) PATENT APPLICATION PUBLICATION
(21) Application No.202411025518 A
(19) INDIA
(22) Date of filing of Application :28/03/2024
(43) Publication Date : 14/11/2025

(54) Title of the invention : ADAPTABLE SOCKS WEARING ASSISTIVE DEVICE

(51) International classification	:B41J0002010000, G01N0029220000, A47G0025900000, B25J0011000000, G01S0015931000
(31) Priority Document No	:NA
(32) Priority Date	:NA
(33) Name of priority country	:NA
(86) International Application No	:NA
Filing Date	:NA
(87) International Publication No	: NA
(61) Patent of Addition to Application Number	:NA
Filing Date	:NA
(62) Divisional to Application Number	:NA
Filing Date	:NA

(71)**Name of Applicant :**
1)Chandigarh Group of Colleges
Address of Applicant :Landran Kharar Banur Highway, Sector 112, Sahibzada Ajit Singh Nagar, Landran, Mohali, Punjab-140307, India. Mohali Punjab India
(72)**Name of Inventor :**
1)Dr. Ranjan Sariyal
2)Dr. Shweta Lamba
3)Mandeep
4)Sunny Kumar
5)Suryansh

(57) Abstract :
An adaptable socks wearing assistive device comprises a platform 1 configured with plurality of suction cups 2 to adhere the platform 1 on a ground surface, an ultrasonic sensor determines presence of a sock in proximity to the platform 1, a pair of telescopically operated links 3 integrated on the platform 1 positions a motorized clamps 4 to grab ends of the sock, an artificial intelligence-based imaging unit 5 determines dimensions of the socks, a pair of robotic arms 6 arranged on the platform 1 for gripping ends of mouth portion of the sock for arranging the sock on a curved plate 7, an angle sensor embedded on the platform 1 for determining inclination of the user's foot with respect to the curved plate 7, and a motorized hinge joint 8 to provide converging/diverging movement to the curved plate 7 for tilting the plate 7.

No. of Pages : 14 No. of Claims : 3

(12) PATENT APPLICATION PUBLICATION
(21) Application No.202411025519 A
(19) INDIA
(22) Date of filing of Application :28/03/2024
(43) Publication Date : 14/11/2025

(54) Title of the invention : WEARABLE SHIRT SLEEVE HOLDING DEVICE

(51) International classification	:G01N0033680000, F04B0035060000, B29C0073160000, E03C0001050000, F16C0017020000
(31) Priority Document No	:NA
(32) Priority Date	:NA
(33) Name of priority country	:NA
(86) International Application No	:NA
Filing Date	:NA
(87) International Publication No	: NA
(61) Patent of Addition to Application Number	:NA
Filing Date	:NA
(62) Divisional to Application Number	:NA
Filing Date	:NA

(71)**Name of Applicant :**
1)Chandigarh Group of Colleges
Address of Applicant :Landran Kharar Banur Highway, Sector 112, Sahibzada Ajit Singh Nagar, Landran, Mohali, Punjab-140307, India. Mohali Punjab India
(72)**Name of Inventor :**
1)Dr. Ramandeep Saini
2)Dr. Seema Rani
3)Manveer Kaur

(57) Abstract :
A wearable shirt sleeve holding device, comprises of a cylindrical hollow body 1 developed to be accommodated over folded sleeve of a shirt worn by a user, a laser acuity sensor for detecting diameter of the user's arm, an air compressor 2 for inflating an inflatable member 3 equipped at inner periphery of the body 1, an artificial intelligence-based imaging unit for capturing and processing multiple images of the sleeve, a pair of motorized clippers 4 to accurately fold the sleeve to prevent formation of creases on the sleeve, an electronic valve 5 to open in view of releasing air for slightly deflating the member, a voltage regulator 7 paired with the fibers for providing a suitable voltage to the fibers.

No. of Pages : 16 No. of Claims : 3

(12) PATENT APPLICATION PUBLICATION
(21) Application No.202411025520 A
(19) INDIA
(22) Date of filing of Application :28/03/2024
(43) Publication Date : 14/11/2025

(54) Title of the invention : WEARABLE WALKING AID DEVICE

(51) International classification	:A61H0003000000, F16D0027105000, A61H0003040000, A61H0003020000, F04B0035060000
(31) Priority Document No	:NA
(32) Priority Date	:NA
(33) Name of priority country	:NA
(86) International Application No	:NA
Filing Date	:NA
(87) International Publication No	: NA
(61) Patent of Addition to Application Number	:NA
Filing Date	:NA
(62) Divisional to Application Number	:NA
Filing Date	:NA

(71)**Name of Applicant :**
1)Chandigarh Group of Colleges
Address of Applicant :Landran Kharar Banur Highway, Sector 112, Sahibzada Ajit Singh Nagar, Landran, Mohali, Punjab-140307, India. Mohali Punjab India
(72)**Name of Inventor :**
1)Reema Mitra
2)Dr. Supriya Agnihotri
3)Komal
4)Anchal
5)Dimple

(57) Abstract :
A wearable walking aid device, comprising an elliptical extendable frame 1 accommodate over heel tab and tongue of a shoe, a cylindrical hollow member 2 is installed with the frame accommodated around calf portion of a user's leg, a user-interface 3 installed within a computing unit for give input commands, an artificial intelligence-based imaging unit 4 mounted on the frame and for capturing and processing multiple images of the shoe, a curved-shaped unit 5 installed with the frame to extend via a drawer arrangement 6, a speaker 7 mounted on the frame for notifying the user, an air compressor for inflating an inflatable unit equipped within the member for gripping the member, an electromagnetic spring 8 configured between the frame and rod for providing assistance to the user in walking on the ground surface.

No. of Pages : 16 No. of Claims : 5

(12) PATENT APPLICATION PUBLICATION
(21) Application No.202411025521 A
(19) INDIA
(22) Date of filing of Application :28/03/2024
(43) Publication Date : 14/11/2025

(54) Title of the invention : ADAPTABLE CARPET MAINTENANCE ASSISTIVE DEVICE

(51) International classification	:G05D0001020000, B25J0005000000, E03F0001000000, G01S0017931000, G01S0007481000	(71)**Name of Applicant :** **1)Chandigarh Group of Colleges** Address of Applicant :Landran Kharar Banur Highway, Sector 112, Sahibzada Ajit Singh Nagar, Landran, Mohali, Punjab-140307, India. Mohali Punjab India
(31) Priority Document No	:NA	(72)**Name of Inventor :**
(32) Priority Date	:NA	**1)Sarabjit Kaur**
(33) Name of priority country	:NA	**2)Kirti Rani**
(86) International Application No	:NA	**3)Kritika**
Filing Date	:NA	
(87) International Publication No	: NA	
(61) Patent of Addition to Application Number	:NA	
Filing Date	:NA	
(62) Divisional to Application Number	:NA	
Filing Date	:NA	

(57) Abstract :
An adaptable carpet maintenance assistive device, comprising a platform 1 positioned on a ground surface laid with a carpet, plurality of motorized wheels 2 move platform 1 over surface, an artificial intelligence-based imaging unit 3 detect a wrinkled portion on carpet, a LiDAR sensor determines distance of platform 1 and plane surface near to wrinkled portion, a telescopically operated L-shaped rod 4 extends for positioning a suction unit 5 on surface for securing platform 1 on surface, thereafter the wheels 2 move on platform 1 in forward direction for applying a pulling force on wrinkled portion, and followed by synchronized actuation of rod 4 to extend/retract for maintaining position of suction unit 5, thereby removing wrinkled portions on carpet.

No. of Pages : 15 No. of Claims : 5

(12) PATENT APPLICATION PUBLICATION
(21) Application No.202411025522 A
(19) INDIA
(22) Date of filing of Application :28/03/2024
(43) Publication Date : 14/11/2025

(54) Title of the invention : RESIDUAL PAINT SQUEEZING DEVICE FOR PAINT BRUSH

(51) International classification	:G06F0003041000, B44D0003120000, B44D0003000000, A61B0017220000, A46B0015000000	(71)**Name of Applicant :** **1)Chandigarh Group of Colleges** Address of Applicant :Landran Kharar Banur Highway, Sector 112, Sahibzada Ajit Singh Nagar, Landran, Mohali, Punjab-140307, India. Mohali Punjab India
(31) Priority Document No	:NA	(72)**Name of Inventor :**
(32) Priority Date	:NA	**1)Sukhmani Sandhu**
(33) Name of priority country	:NA	**2)Shailee Thakur**
(86) International Application No	:NA	**3)Anmol**
Filing Date	:NA	
(87) International Publication No	: NA	
(61) Patent of Addition to Application Number	:NA	
Filing Date	:NA	
(62) Divisional to Application Number	:NA	
Filing Date	:NA	

(57) Abstract :
A residual paint squeezing device for paint brush, a cylindrical body 1 positioned on a fixed surface and installed with a C-shaped expandable member 2 for accommodating a handle of a paint brush, a microphone 3 is positioned on body 1 for enabling a user to give voice commands for cleaning bristles of the paint brush, a drawer arrangement 4 integrated within member 2 for increasing dimensions of member 2 to grip handle in a secured manner, an artificial intelligence-based imaging unit 5 mounted in body 1 to detect thickness of bristles of brush, a pair of telescopically operated links 6 installed with inner side walls of body 1 to extend for positioning a pair of flaps attached with links 6, a pair of motorized sliders 7 configured between links 6 and inner walls for translating links to squeeze residual paint from bristles.

No. of Pages : 16 No. of Claims : 5

(12) PATENT APPLICATION PUBLICATION
(21) Application No.202411025523 A
(19) INDIA
(22) Date of filing of Application :28/03/2024
(43) Publication Date : 14/11/2025

(54) Title of the invention : DEVICE FOR COVERING A SINK

(51) International classification	:B25J0009000000, E04D0013030000, H04N0005225000, B65G0021140000, B25J0011000000
(31) Priority Document No	:NA
(32) Priority Date	:NA
(33) Name of priority country	:NA
(86) International Application No	:NA
Filing Date	:NA
(87) International Publication No	: NA
(61) Patent of Addition to Application Number	:NA
Filing Date	:NA
(62) Divisional to Application Number	:NA
Filing Date	:NA

(71)**Name of Applicant :**
1)Chandigarh Group of Colleges
Address of Applicant :Landran Kharar Banur Highway, Sector 112, Sahibzada Ajit Singh Nagar, Landran, Mohali, Punjab-140307, India. Mohali Punjab India
(72)**Name of Inventor :**
1)Kirti Rani
2)Kirti Sharma
3)Sukhjot Kaur

(57) Abstract :
A device for covering a sink, comprising, a rectangular frame 1 having four side members with each of the four side members comprising a multiple frame 1 member plates 2 connected with each other by motorized sliders 10, enabling sliding motion between the successive member plates 2 to change a length of each of the four side members to change the peripheral dimension of the rectangular frame 1 according to a dimension of the sink, an artificial intelligence-based imaging unit 3 to recognize a quantity of utensils being placed on the device, a motorized slider 6sto extend or retract the side members as per an area required by the utensils to keep a remaining area of the sink accessible for a user, and a robotic arm 7 for gripping and moving the utensils off the device.

No. of Pages : 17 No. of Claims : 3

(12) PATENT APPLICATION PUBLICATION
(21) Application No.202411025524 A
(19) INDIA
(22) Date of filing of Application :28/03/2024
(43) Publication Date : 14/11/2025

(54) Title of the invention : HAND-HELD SANDING ASSISTIVE DEVICE

(51) International classification	:G03H0001220000, B65G0023080000, G06F0001323100, B64D0009000000, G09B0019000000	(71)**Name of Applicant :** **1)Chandigarh Group of Colleges** Address of Applicant :Landran Kharar Banur Highway, Sector 112, Sahibzada Ajit Singh Nagar, Landran, Mohali, Punjab-140307, India. Mohali Punjab India
(31) Priority Document No	:NA	(72)**Name of Inventor :**
(32) Priority Date	:NA	**1)Dr. Ramandeep Saini**
(33) Name of priority country	:NA	**2)Dr. Seema Rani**
(86) International Application No	:NA	**3)Gurleen Kaur**
Filing Date	:NA	
(87) International Publication No	: NA	
(61) Patent of Addition to Application Number	:NA	
Filing Date	:NA	
(62) Divisional to Application Number	:NA	
Filing Date	:NA	

(57) Abstract :
A hand-held sanding assistive device, comprising an extendable cylindrical frame 1 developed to be handheld by a user in proximity to a workpiece, a handle 2 attached with the frame 1 for providing grip to the user, an imaging unit 3 mapped on the frame 1 to evaluate a 3D (three-dimensional) mapping of surroundings, a display panel 4 mounted on the frame 1 for enabling a user to give input commands, a holographic projection unit 5 mapped on the frame 1 to project a holographic image over user-specified portion, a hydraulic V-shaped member 6 attached with the frame 1, a motorized roller 7 arranged on the frame 1 and coupled with ends of the member 6 via a conveyor belt 8 to provide rotational motion to the belt 8 in view of sanding the workpiece and a motorized air blower 9 arranged on the frame 1 to blow air.

No. of Pages : 15 No. of Claims : 3

(12) PATENT APPLICATION PUBLICATION
(21) Application No.202411025525 A
(19) INDIA
(22) Date of filing of Application :28/03/2024
(43) Publication Date : 14/11/2025

(54) Title of the invention : FINGER NAIL MANAGEMENT DEVICE

(51) International classification	:A45D0029000000, F16C0011060000, A45D0029050000, B25J0013080000, H04N0021482000	(71)**Name of Applicant :** **1)Chandigarh Group of Colleges** Address of Applicant :Landran Kharar Banur Highway, Sector 112, Sahibzada Ajit Singh Nagar, Landran, Mohali, Punjab-140307, India. Mohali Punjab India
(31) Priority Document No	:NA	(72)**Name of Inventor :** **1)Mannat Bains**
(32) Priority Date	:NA	**2)Amrita Saini**
(33) Name of priority country	:NA	**3)Rashi Arora**
(86) International Application No	:NA	
Filing Date	:NA	
(87) International Publication No	: NA	
(61) Patent of Addition to Application Number	:NA	
Filing Date	:NA	
(62) Divisional to Application Number	:NA	
Filing Date	:NA	

(57) Abstract :
A finger nail management device comprises of a curved-shaped body 1 developed to be accommodated with a user's finger and connected with an inverted-shaped telescopically operated frame 10, a microphone 2 to give input commands for cutting the user's finger nail, an ultrasonic sensor for detecting thickness of the user's finger, a pair of motorized ball and socket joints 7 for providing suitable multi-directional motion to the member 5 and filer 9 for accurately cutting and filing the user's nail, an electronic nozzle 12 for dispensing the solution for heeling the injury, a tactile sensor for detecting hardness of the nail, an artificial intelligence-based imaging unit 3 for detecting the user's finger, and an L-shaped telescopically operated link 4 attached with the body 1 and connected with a U-shaped telescopically operated member 5 attached with levers of a nail cutter for cutting the user's nail.

No. of Pages : 18 No. of Claims : 6

(12) PATENT APPLICATION PUBLICATION
(21) Application No.202411025526 A
(19) INDIA
(22) Date of filing of Application :28/03/2024
(43) Publication Date : 14/11/2025

(54) Title of the invention : MODULAR DUST-PAN

(51) International classification	:H04W0074080000, H04M0001020000, G02B0027000000, G06T0015000000, H02K0007102000
(31) Priority Document No	:NA
(32) Priority Date	:NA
(33) Name of priority country	:NA
(86) International Application No	:NA
Filing Date	:NA
(87) International Publication No	: NA
(61) Patent of Addition to Application Number	:NA
Filing Date	:NA
(62) Divisional to Application Number	:NA
Filing Date	:NA

(71)**Name of Applicant :**
1)Chandigarh Group of Colleges
Address of Applicant :Landran Kharar Banur Highway, Sector 112, Sahibzada Ajit Singh Nagar, Landran, Mohali, Punjab-140307, India. Mohali Punjab India
(72)**Name of Inventor :**
1)Dr. Seema Rani
2)Dr. Kamalpreet Kaur
3)Ankita Bhatti

(57) Abstract :
A modular dust-pan comprises of, a rectangular frame 1 developed to be positioned in proximity to a garbage-bin, an ultrasonic sensor is embedded on the frame 1 for determining dimensions of the bin, an artificial intelligence-based imaging unit installed on the frame 1 to determine position of gathered debris on the surface, a motorized hinge joint 3 embedded on the frame 1 by means of a flap 2 that is arranged on the frame 1 to provide converging/diverging movement to the flap 2 for deploying the flap 2, a telescopically operated link arranged on the frame 1 via a pair of curved plates 4 that are configured on the frame 1 to extend/retract for positioning the plates 4 in proximity to the debris.

No. of Pages : 17 No. of Claims : 4

(12) PATENT APPLICATION PUBLICATION
(21) Application No.202411025527 A
(19) INDIA
(22) Date of filing of Application :28/03/2024
(43) Publication Date : 14/11/2025

(54) Title of the invention : GARBAGE/ WASTE COLLECTION ASSISTIVE DEVICE FOR SACKS

(51) International classification	:B65F0001140000, B65F0001060000, G01S0007481000, B65F0001000000, G01S0017931000
(31) Priority Document No	:NA
(32) Priority Date	:NA
(33) Name of priority country	:NA
(86) International Application No	:NA
Filing Date	:NA
(87) International Publication No	: NA
(61) Patent of Addition to Application Number	:NA
Filing Date	:NA
(62) Divisional to Application Number	:NA
Filing Date	:NA

(71)**Name of Applicant :**
1)Chandigarh Group of Colleges
Address of Applicant :Landran Kharar Banur Highway, Sector 112, Sahibzada Ajit Singh Nagar, Landran, Mohali, Punjab-140307, India. Mohali Punjab India
(72)**Name of Inventor :**
1)Dr. Ruchi Singla
2)Dr. Amresh Kumar
3)Satwinder Singh
4)Amanpreet
5)Devesh
6)Suraj Kumar
7)Dushyant Sharma

(57) Abstract :
A garbage/ waste collection assistive device for sacks, comprising a cylindrical frame having a pair of curved vertical plates 1 positioned in proximity to sack, an imaging unit 2 captures images in vicinity to the frame, a drawer arrangement extends the plate, multiple electromagnets energizes to establish frame from the sack, a proximity sensor monitors presence of waste in proximity, a motorized hinge joint 4 provides movement to V-shaped member, multiple telescopically operated rods 5 extends to create ample space inside the sack, a LiDAR sensor detects dimensions of the sack, a speaker 6 notifies the user of filled capacity, multiple motorized clippers grips corner of the sack.

No. of Pages : 16 No. of Claims : 4

(12) PATENT APPLICATION PUBLICATION
(21) Application No.202411025531 A
(19) INDIA
(22) Date of filing of Application :28/03/2024
(43) Publication Date : 14/11/2025

(54) Title of the invention : AUTOMATED GRIPPING ASSISTIVE DEVICE FOR DISABLED

(51) International classification	:A61H0003040000, A61H0003000000, A61L0002100000, A61H0003060000, A47K0010480000
(31) Priority Document No	:NA
(32) Priority Date	:NA
(33) Name of priority country	:NA
(86) International Application No	:NA
Filing Date	:NA
(87) International Publication No	: NA
(61) Patent of Addition to Application Number	:NA
Filing Date	:NA
(62) Divisional to Application Number	:NA
Filing Date	:NA

(71)**Name of Applicant :**
1)Chandigarh Group of Colleges
Address of Applicant :Landran Kharar Banur Highway, Sector 112, Sahibzada Ajit Singh Nagar, Landran, Mohali, Punjab-140307, India. Mohali Punjab India
(72)**Name of Inventor :**
1)Dr. Shweta Lamba
2)Mandeep
3)Dr. Ranjan Sariyal
4)Ishan Sharma

(57) Abstract :
An automated gripping assistive device for disabled, comprising a frame 1 having a curved member positioned on a walking support, an artificial intelligence-based imaging unit 2 determine dimensions and shape of top portion of walking support, multiple motorized hinges 3 tilt portion of member to get positioned over top portion, plurality of suction units 4 adheres frame 1 on top portion of walking support, a tubular structure 5 arranged over member is accessed by user for acquiring a grip over walking support, a moisture sensor monitors moisture level of user's hands, plurality of plates integrated with Peltier unit cools plates, multiple motorized iris lids allowing exposure of user's hand with internal portion of structure 5, and a motorized fan installed inside structure 5 to blow air along internal portion of structure 5 that strikes with plate for drying moisture of user's hand.

No. of Pages : 16 No. of Claims : 3

(12) PATENT APPLICATION PUBLICATION
(21) Application No.202411025532 A
(19) INDIA
(22) Date of filing of Application :28/03/2024
(43) Publication Date : 14/11/2025

(54) Title of the invention : ADAPTABLE LENS COVERING ASSISTIVE DEVICE

(51) International classification	:H01L0021670000, G02B0007020000, H01L0051000000, H04N0005225000, H04W0074080000
(31) Priority Document No	:NA
(32) Priority Date	:NA
(33) Name of priority country	:NA
(86) International Application No	:NA
Filing Date	:NA
(87) International Publication No	: NA
(61) Patent of Addition to Application Number	:NA
Filing Date	:NA
(62) Divisional to Application Number	:NA
Filing Date	:NA

(71)**Name of Applicant :**
1)Chandigarh Group of Colleges
Address of Applicant :Landran Kharar Banur Highway, Sector 112, Sahibzada Ajit Singh Nagar, Landran, Mohali, Punjab-140307, India. Mohali Punjab India
(72)**Name of Inventor :**
1)Mandeep Kaur
2)Dr. Shweta Lamba
3)Dr. Ranjan Sariyal
4)Aryan
5)Sahib

(57) Abstract :
An adaptable lens covering assistive device, comprising a cylindrical frame 1 positioned in proximity to a lens of a camera, an imaging unit 2 integrated in the frame 1 to determine dimensions of lens, a pulley arrangement 3 integrated with the frame 1 for allowing accommodation of the frame 1 on lens properly, an inflatable member 5 integrated on a pair of rods 4 arranged on the frame 1 to get inflated for adhering to upper and lower portions of the lens for securing the frame 1 on the lens, a clamp 7 integrated on the frame 1 by means of a robotic link 6 to hold the camera for securing the frame 1 on camera, a microphone integrated on the frame 1 for receiving frame 1 removing command, a hinge joint 8 arranged with the link 6 for orienting the frame 1 away from lens to free the lens.

No. of Pages : 16 No. of Claims : 3

(12) PATENT APPLICATION PUBLICATION
(21) Application No.202411025533 A
(19) INDIA
(22) Date of filing of Application :28/03/2024
(43) Publication Date : 14/11/2025

(54) Title of the invention : AUTOMATED WASP NET RELOCATION DEVICE

(51) International classification	:A01K0067033000, G05D0001020000, G01S0001720000, H04N0005770000, H04N0007180000	(71)**Name of Applicant :** **1)Chandigarh Group of Colleges** Address of Applicant :Landran Kharar Banur Highway, Sector 112, Sahibzada Ajit Singh Nagar, Landran, Mohali, Punjab-140307, India. Mohali Punjab India
(31) Priority Document No	:NA	(72)**Name of Inventor :**
(32) Priority Date	:NA	**1)Satwinder Singh**
(33) Name of priority country	:NA	**2)Dr. Amresh Kumar**
(86) International Application No	:NA	**3)Dr. Rachin Goyal**
Filing Date	:NA	**4)Lovepreet Singh**
(87) International Publication No	: NA	
(61) Patent of Addition to Application Number	:NA	
Filing Date	:NA	
(62) Divisional to Application Number	:NA	
Filing Date	:NA	

(57) Abstract :
An automated wasp net relocation device, comprising a platform 1 positioned on a ground surface, plurality of motorized omnidirectional wheels 2 for maneuvering and positioning the platform 1, a touch enabled screen 3 v for enabling a user to give input commands for relocating a wasp nest, an artificial intelligence-based imaging unit 4 for detecting exact location of wasp nest, a plate 5 for lifting and positioning plate 5, a first robotic arm 7 for accommodating the ring 14 around wasp nest, plurality of flaps 8, plurality of motorized hinges 9 for tilting the flaps 8 to cover the nest, a second robotic arm 10 for detaching the nest from the ceiling portion, a cutter 11 to cut top portion of nest, a motorized lid 12 to close to prevent wasp from escaping nest, a third robotic arm 13 for dispensing adhesive solution, an electronic valve connected with a chamber stored with an adhesive solution, iris pores 15 for providing proper ventilation.

No. of Pages : 16 No. of Claims : 4

(12) PATENT APPLICATION PUBLICATION
(21) Application No.202411025534 A
(19) INDIA
(22) Date of filing of Application :28/03/2024
(43) Publication Date : 14/11/2025

(54) Title of the invention : ADJUSTABLE BATHING ASSISTIVE DEVICE

(51) International classification	:A61B0005000000, A61H0003000000, A47K0003120000, A47C0007440000, B25J0009160000	(71)**Name of Applicant :** **1)Chandigarh Group of Colleges** Address of Applicant :Landran Kharar Banur Highway, Sector 112, Sahibzada Ajit Singh Nagar, Landran, Mohali, Punjab-140307, India. Mohali Punjab India
(31) Priority Document No	:NA	(72)**Name of Inventor :** **1)Dr. Dinesh Arora**
(32) Priority Date	:NA	**2)Dr. Parveen Singla**
(33) Name of priority country	:NA	**3)Dr. Ruchi Singla**
(86) International Application No	:NA	**4)Vaibhav Gupta**
Filing Date	:NA	**5)Dhanraj**
(87) International Publication No	: NA	**6)Sumit Bhati**
(61) Patent of Addition to Application Number	:NA	
Filing Date	:NA	
(62) Divisional to Application Number	:NA	
Filing Date	:NA	

(57) Abstract :
An adjustable bathing assistive device, comprising a frame 1 developed to be positioned vertically on a seating unit 2, suction cups 3 to adhere to the seating unit 2 for securing the frame 1 on the seating unit 2, hydraulically operated L-shaped rods 4 to extend/retract for positioning a suction unit 5 on the ground surface for adhering to the surface, thereby providing an additional support to the frame 1, artificial intelligence-based imaging unit 6 for capturing multiple images in vicinity of the platform to detect positioning of the user on the seating unit 2, hydraulically operated link 8 to position a plate 7 underneath the user's legs, motorized hinges 10 to tilt the plates 9 as per the user's back posture and motorized clamps 11 to enclose the user's chest portion for restricting movement of the user on the seating unit 2.

No. of Pages : 15 No. of Claims : 4

(12) PATENT APPLICATION PUBLICATION
(21) Application No.202411025535 A
(19) INDIA
(22) Date of filing of Application :28/03/2024
(43) Publication Date : 14/11/2025

(54) Title of the invention : ADJUSTABLE KNEE SUPPORTING DEVICE

(51) International classification	:G10L0015220000, A61B0090500000, A61G0012000000, G06K0007100000, A63B0021062000	(71)**Name of Applicant :** **1)Chandigarh Group of Colleges** Address of Applicant :Landran Kharar Banur Highway, Sector 112, Sahibzada Ajit Singh Nagar, Landran, Mohali, Punjab-140307, India. Mohali Punjab India
(31) Priority Document No	:NA	(72)**Name of Inventor :** **1)Dr. Jyoti Singh**
(32) Priority Date	:NA	**2)Anjoo Kamboj**
(33) Name of priority country	:NA	**3)Pallavi Ahirrao**
(86) International Application No	:NA	**4)Tanish Sharma**
Filing Date	:NA	**5)Vanit Kumar**
(87) International Publication No	: NA	
(61) Patent of Addition to Application Number	:NA	
Filing Date	:NA	
(62) Divisional to Application Number	:NA	
Filing Date	:NA	

(57) Abstract :
An adjustable knee supporting device, comprising a U-shaped frame 1 accessed by a user for engaging the frame 1 on the user's forelegs, a pair of curved rods 2 integrated with a drawer arrangement 3 integrated in the frame 1 for accommodating the user's foreleg in between the rods 2, an imaging unit 4 installed on frame 1 to determine dimensions of user's foreleg, a flap 5 arranged on the first end by means of a pair of hinge joints 6, a plate 7 arranged at the second end of the rod 2 accessed by the user for positioning the hip portion on the plate 7, a microphone 9 integrated on the frame 1 for receiving voice command, plurality of wheels 8 arranged underneath the frame 1 to move frame 1 at user-specified direction.

No. of Pages : 15 No. of Claims : 3

(12) PATENT APPLICATION PUBLICATION
(21) Application No.202411025536 A
(19) INDIA
(22) Date of filing of Application :28/03/2024
(43) Publication Date : 14/11/2025

(54) Title of the invention : AUTOMATED CALLUSES AND EXTRA SKIN REMOVAL DEVICE

(51) International classification	:A61Q0019000000, A61B0017540000, A61B0017320000, A61B0005000000, H01L0021670000	(71)**Name of Applicant :** **1)Chandigarh Group of Colleges** Address of Applicant :Landran Kharar Banur Highway, Sector 112, Sahibzada Ajit Singh Nagar, Landran, Mohali, Punjab-140307, India. Mohali Punjab India
(31) Priority Document No	:NA	(72)**Name of Inventor :**
(32) Priority Date	:NA	**1)Shikha Virk**
(33) Name of priority country	:NA	**2)Dr. Rupinder Sodhi**
(86) International Application No	:NA	**3)Sunny Dhiman**
Filing Date	:NA	**4)Dimple**
(87) International Publication No	: NA	**5)Tribeni Baruah**
(61) Patent of Addition to Application Number	:NA	
Filing Date	:NA	
(62) Divisional to Application Number	:NA	
Filing Date	:NA	

(57) Abstract :
An automated calluses and extra skin removal device, comprising a cuboidal body 1 developed to be positioned on a fixed surface, palm and foot-like two separate structure 2 to mimic natural palm and foot contours of a human body, , artificial intelligence-based imaging unit 3 for capturing multiple images of the user's palm/ foot to detect dimensions and presence of calluses and extra skin present on palm and foot of the user, electronic nozzle 4 connected with a vessel 5 stored with moisturizing solution for dispensing moisturizing solution over the accommodated palm/ foot, telescopically operated rod 7 to extend for positioning a motorized disc 6 in proximity to the user's palm/foot to rotate for scrubbing via bristles 8 and a robotic arm 9 to extend for positioning a motorized blade 10 in contact with calluses and extra skin.

No. of Pages : 16 No. of Claims : 4

(12) PATENT APPLICATION PUBLICATION
(21) Application No.202411025537 A
(19) INDIA
(22) Date of filing of Application :28/03/2024
(43) Publication Date : 14/11/2025

(54) Title of the invention : MODULAR CANE

(51) International classification	:A45B3/00, G06T7/00, B25J19/02, B25J15/00, F16B47/00
(31) Priority Document No	:NA
(32) Priority Date	:NA
(33) Name of priority country	:NA
(86) International Application No	:NA
Filing Date	:NA
(87) International Publication No	: NA
(61) Patent of Addition to Application Number	:NA
Filing Date	:NA
(62) Divisional to Application Number	:NA
Filing Date	:NA

(71)**Name of Applicant :**
1)Chandigarh Group of Colleges
Address of Applicant :Landran Kharar Banur Highway, Sector 112, Sahibzada Ajit Singh Nagar, Landran, Mohali, Punjab-140307, India. Mohali Punjab India
(72)**Name of Inventor :**
1)Dr. Shweta Lamba
2)Mandeep
3)Dr. Ranjan Sariyal
4)Ishan Sharma

(57) Abstract :
A modular cane, comprising an elongated body 1 having a proximal and distal end, a handle 2 is fabricated on proximal end that is accessed by a user for positioning distal end on a ground surface, plurality of U-shaped members 3 arranged underneath body 1 for providing support to body 1 on surface, plurality of suction cups adhere surface for securing body 1 on surface, an artificial intelligence-based imaging unit 5 determines height of user, a telescopically operated rod 4 extends/retracts for positioning handle 2 near user hands, an ultrasonic sensor determines presence of an object in user's hands, plurality of curved flaps 6 via a motorized hinge joint for forming a circular structure in which user accommodates object on structure, a telescopically operated link 7 extends/retracts for providing a support to plates for assisting user to transport objects with ease while walking.

No. of Pages : 16 No. of Claims : 4

(12) PATENT APPLICATION PUBLICATION
(21) Application No.202411025538 A
(19) INDIA
(22) Date of filing of Application :28/03/2024
(43) Publication Date : 14/11/2025

(54) Title of the invention : MODULAR PACKAGE OPENER

(51) International classification	:A61H0001020000, G01B0011250000, G06F0003010000, B26B0027000000, G05D0001020000	(71)**Name of Applicant :** **1)Chandigarh Group of Colleges** Address of Applicant :Landran Kharar Banur Highway, Sector 112, Sahibzada Ajit Singh Nagar, Landran, Mohali, Punjab-140307, India. Mohali Punjab India
(31) Priority Document No	:NA	(72)**Name of Inventor :** **1)Dr. Parveen Singla**
(32) Priority Date	:NA	**2)Dr. Dinesh Arora**
(33) Name of priority country	:NA	**3)Dr. Ruchi Singla**
(86) International Application No	:NA	**4)Ritwika Raj**
Filing Date	:NA	**5)Nandita**
(87) International Publication No	: NA	**6)Onkar**
(61) Patent of Addition to Application Number	:NA	
Filing Date	:NA	
(62) Divisional to Application Number	:NA	
Filing Date	:NA	

(57) Abstract :
A modular package opener comprises of a wearable body 1 having a hemisphere topped by a cylindrical member, a touch sensor installed in the body 1 for detecting the user's fingers in the body 1 , an artificial intelligence-based imaging unit 2 installed on the body 1 to determine pattern of an adhesive tape wrapped on a packed carton, a speaker 5 installed in the body 1 to produce audio signals for guiding the user to position the worn body 1 in proximity to the carton, a laser projection unit 7 is installed in the body 1 for projecting laser beams on the carton in view of guiding the user to move the body 1 over the projected beams and a blade 4 installed on the body 1 by means of a motorized hinge joint 3 to provide converging or diverging movement to the blade 4.

No. of Pages : 15 No. of Claims : 6

(12) PATENT APPLICATION PUBLICATION
(21) Application No.202411025539 A
(19) INDIA
(22) Date of filing of Application :28/03/2024
(43) Publication Date : 14/11/2025

(54) Title of the invention : PAPER CUP HOLDING ASSISTIVE DEVICE

(51) International classification	:F21Y0115100000, B25J0011000000, B65D0081380000, G07F0013100000, G01N0021880000
(31) Priority Document No	:NA
(32) Priority Date	:NA
(33) Name of priority country	:NA
(86) International Application No	:NA
Filing Date	:NA
(87) International Publication No	: NA
(61) Patent of Addition to Application Number	:NA
Filing Date	:NA
(62) Divisional to Application Number	:NA
Filing Date	:NA

(71)**Name of Applicant :**
1)Chandigarh Group of Colleges
Address of Applicant :Landran Kharar Banur Highway, Sector 112, Sahibzada Ajit Singh Nagar, Landran, Mohali, Punjab-140307, India. Mohali Punjab India
(72)**Name of Inventor :**
1)Sonia Jindal
2)Dr. Ruchi Singla
3)Dr. Shweta Lamba
4)Pranav
5)Onkar

(57) Abstract :
A paper cup holding assistive device, comprising a frame 1 attached with an inverted U-shaped link 2 that is accessed by a user to gripping the link 2 while handling the device, an artificial intelligence-based imaging unit 3 installed on the frame 1 to detect presence of paper cups in proximity to the frame 1, a robotic arm 4 installed on the frame 1 to extend for positioning a curve-shaped member in proximity to the detected cup, a LED (Light Emitting Diode) light 5 configured on the frame 1 for providing a visual means for notifying the user regarding beverage stored inside the cup and a gyroscope 6 mapped on the frame 1 to detect misbalancing of the accommodated cup.

No. of Pages : 14 No. of Claims : 4

(12) PATENT APPLICATION PUBLICATION
(21) Application No.202411025540 A
(19) INDIA
(22) Date of filing of Application :28/03/2024
(43) Publication Date : 14/11/2025

(54) Title of the invention : NASAL DROP DISPENSING ASSISTIVE DEVICE

(51) International classification	:A61M0016060000, A62B0023060000, G01S0007481000, A61H0003000000, G01S0017890000	(71)**Name of Applicant :** **1)Chandigarh Group of Colleges** Address of Applicant :Landran Kharar Banur Highway, Sector 112, Sahibzada Ajit Singh Nagar, Landran, Mohali, Punjab-140307, India. Mohali Punjab India
(31) Priority Document No	:NA	(72)**Name of Inventor :** **1)Dr. Rupinder Kaur Sodhi**
(32) Priority Date	:NA	**2)Dr. Deepika Sharma**
(33) Name of priority country	:NA	**3)Dimpal Rajput**
(86) International Application No	:NA	
Filing Date	:NA	
(87) International Publication No	: NA	
(61) Patent of Addition to Application Number	:NA	
Filing Date	:NA	
(62) Divisional to Application Number	:NA	
Filing Date	:NA	

(57) Abstract :
A nasal drop dispensing assistive device, comprising a frame 1 having a plate 2 positioned on a neck portion of a user and installed with an artificial intelligence based imaging unit 4 to determine structure of user's neck portion, multiple motorized hinge joints 3 tilt plate 2 to properly accommodate frame 1 on user's neck portion, an inverted U-shaped member 5 is attached with plate 2 via a motorized ball and socket joint 6 to attain stable position over user's facial portion, a robotic arm 7 configuring a clamping unit holds a bottle of medicated solution, a LiDAR (Light Detection and Ranging) sensor detects dimensions and position of nose and nostrils thereafter arm 7 positions bottle above user's nose, a speaker 8 guides user to tilt neck and position head at an optimum position, a pair of electromagnetic springs 9 facilitate pressing of bottle for pouring medicinal drops inside nostrils.

No. of Pages : 15 No. of Claims : 4

(12) PATENT APPLICATION PUBLICATION
(21) Application No.202411025550 A
(19) INDIA
(22) Date of filing of Application :28/03/2024
(43) Publication Date : 14/11/2025

(54) Title of the invention : METHODS FOR EFFICIENT QUANTUM KEY DISTRIBUTION AND APPARTUS THEREOF

(51) International classification	:H04L0009080000, H04L0009320000, G06F0007580000, H04L0009060000, H04B0010700000
(31) Priority Document No	:NA
(32) Priority Date	:NA
(33) Name of priority country	:NA
(86) International Application No	:NA
Filing Date	:NA
(87) International Publication No	: NA
(61) Patent of Addition to Application Number	:NA
Filing Date	:NA
(62) Divisional to Application Number	:NA
Filing Date	:NA

(71)**Name of Applicant :**
1)BIRLA INSTITUTE OF TECHNOLOGY AND SCIENCE, PILANI
Address of Applicant :VIDYA VIHAR, PILANI, RAJASTHAN - 333031, INDIA VIDYA VIHAR Rajasthan India
(72)**Name of Inventor :**
1)Dr. Ashutosh Bhatia
2)Dr. Sainath Bitragunta
3)Dr. Kamlesh Tiwari
4)Pratham Prateek Mohanty

(57) Abstract :
The present disclosure discloses an Enhanced Lightweight Quantum Key Distribution (LQKD) protocol. The LQKD establishes a secure key exchange framework by integrating Quantum Random Number Generators (QRNGs), Pseudorandom Number Generators (PRNGs), and Trusted Platform Modules (TPMs). The system generates predetermined positions for key bit verification, calculates hash values for randomized key sequences, and employs classical error reconciliation techniques for error correction. The absence of an eavesdropper is verified through hash value comparisons, allowing for the transformation of shared keys with privacy amplification. The system also provides an optional key initialization process and adapts the key exchange based on estimated Quantum Communication Channel (QCC) error rates to ensure a robust and efficient approach to quantum key distribution.

No. of Pages : 28 No. of Claims : 10

(12) PATENT APPLICATION PUBLICATION
(21) Application No.202411025557 A
(19) INDIA
(22) Date of filing of Application :28/03/2024
(43) Publication Date : 14/11/2025

(54) Title of the invention : ADAPTABLE MILK QUALITY INSPECTION DEVICE

(51) International classification	:G01N0033040000, F04B0049060000, A01J0005013000, A23K0050100000, E21B0043140000
(31) Priority Document No	:NA
(32) Priority Date	:NA
(33) Name of priority country	:NA
(86) International Application No	:NA
Filing Date	:NA
(87) International Publication No	: NA
(61) Patent of Addition to Application Number	:NA
Filing Date	:NA
(62) Divisional to Application Number	:NA
Filing Date	:NA

(71)**Name of Applicant :**
1)Shobhit Institute of Engineering & Technology (Deemed to-be University)
Address of Applicant :NH-58, Dulhera Marg, Modipuram, Meerut-250110, Uttar Pradesh, India. Meerut Uttar Pradesh India
(72)**Name of Inventor :**
1)Alpana Joshi
2)Sahdev Singh
3)Shivani Sharma
4)Vikas Yadav

(57) Abstract :
An adaptable milk quality inspection device, comprising a body 1 developed to be positioned on a fixed surface, the body 1 is arranged with a hopper 2 that is accessed by a user for filling milk in the hopper 2, a sensing module installed in the hopper 2 for monitoring parameters including pH, viscosity, lactose level of the accommodated milk, in according to which a quality of the milk is evaluated, a T-shaped hollow rod 3 is integrated under the hopper 2 and secured with an electronically controlled first valve that is actuated to dispense milk from the hopper 2 into the rod 3, and a pair of containers 4 arranged in the body 1, under the hopper 2 and connected with the rod 3 by means of an electronically controlled second and third (5, 6) for allowing dispensing of milk in containers 4 in a segregated manner.

No. of Pages : 14 No. of Claims : 3

(12) PATENT APPLICATION PUBLICATION
(21) Application No.202411025558 A
(19) INDIA
(22) Date of filing of Application :28/03/2024
(43) Publication Date : 14/11/2025

(54) Title of the invention : ROUTE MAPPING ASSISTIVE DEVICE FOR TRAVELERS

(51) International classification	:B29C0065000000, G06F0003010000, G02B0027010000, A61B0005010000, H04J0014020000
(31) Priority Document No	:NA
(32) Priority Date	:NA
(33) Name of priority country	:NA
(86) International Application No	:NA
Filing Date	:NA
(87) International Publication No	: NA
(61) Patent of Addition to Application Number	:NA
Filing Date	:NA
(62) Divisional to Application Number	:NA
Filing Date	:NA

(71)**Name of Applicant :**
1)Shobhit Institute of Engineering & Technology (Deemed to-be University)
Address of Applicant :NH-58, Dulhera Marg, Modipuram, Meerut-250110, Uttar Pradesh, India. Meerut Uttar Pradesh India
(72)**Name of Inventor :**
1)M. Moni
2)Arun Saini
3)Nitin Kumar
4)Neha Vashishta

(57) Abstract :
A route mapping assistive device for travelers, comprises of a wearable component 1 developed to be worn on a user's wrist and component 1s with a touch interactive display panel 2 for selecting a destination location of the user, an artificial intelligence-based imaging to monitor surrounding of the component 1, an ultrasonic sensor for detecting presence of any protruding fixed structure in the surrounding, a laser emitter 3 for emitting a beam of laser light on the protruded structure, a chamber 4 integrated with a motorized iris lid 5 for allowing the user to access a chalk stored in the chamber 4 in view of leaving a mark at the projected beam of light to leave an impression at the route for mapping purpose in order to aid in finding correct path while returning through the route, and a temperature sensor for monitoring temperature in surrounding of component 1.

No. of Pages : 17 No. of Claims : 3

(12) PATENT APPLICATION PUBLICATION
(21) Application No.202514044609 A
(19) INDIA
(22) Date of filing of Application :08/05/2025
(43) Publication Date : 14/11/2025

(54) Title of the invention : DATA CAPTURE DEVICE

(51) International classification	:H01Q0001240000, G06K0007100000, A61C0017220000, H04R0001020000, A46B0015000000
(31) Priority Document No	:18/659,962
(32) Priority Date	:09/05/2024
(33) Name of priority country	:U.S.A.
(86) International Application No	:NA
Filing Date	:NA
(87) International Publication No	: NA
(61) Patent of Addition to Application Number	:NA
Filing Date	:NA
(62) Divisional to Application Number	:NA
Filing Date	:NA

(71)**Name of Applicant :**
1)ZEBRA TECHNOLOGIES CORPORATION
Address of Applicant :3 Overlook Point, Lincolnshire, IL, 60069, U.S.A. U.S.A.
(72)**Name of Inventor :**
1)POTTER, Jason Y.
2)BRENNAN, Eric Z.
3)SINELNIKOV, Yegor D.
4)TRONGONE, Eric

(57) Abstract :
An example handheld data capture device may include a housing including a head portion and a handle portion extending from the head portion, the head portion having an external wall with a hole formed therethrough. A data capture module is positioned within the housing and an audio device is positioned within and mounted to the housing. A water impermeable membrane is secured to an external surface of the external wall of the housing and covers the hole. A cavity is located between the audio device and the water impermeable membrane. The audio device is configured to resonate at a first frequency and cause the water impermeable membrane to resonate at a second frequency, different that the first frequency.

No. of Pages : 24 No. of Claims : 27

(12) PATENT APPLICATION PUBLICATION
(21) Application No.202411025572 A
(19) INDIA
(22) Date of filing of Application :28/03/2024
(43) Publication Date : 14/11/2025

(54) Title of the invention : MODULAR CARRIER FOR BICYCLES

(51) International classification	:F16D0027105000, G01S0007481000, G01B0011020000, B62J0045100000, E05B0073000000
(31) Priority Document No	:NA
(32) Priority Date	:NA
(33) Name of priority country	:NA
(86) International Application No	:NA
Filing Date	:NA
(87) International Publication No	: NA
(61) Patent of Addition to Application Number	:NA
Filing Date	:NA
(62) Divisional to Application Number	:NA
Filing Date	:NA

(71)**Name of Applicant :**
1)Shobhit Institute of Engineering & Technology (Deemed to-be University)
Address of Applicant :NH-58, Dulhera Marg, Modipuram, Meerut-250110, Uttar Pradesh, India. Meerut Uttar Pradesh India
(72)**Name of Inventor :**
1)M. Moni
2)Arun Saini
3)Nitin Kumar
4)Neha Vashishta

(57) Abstract :
A modular carrier for bicycles comprises of, a frame 1 developed to be arranged on rear portion of a bicycle acts as a carrier of the bicycle to accommodate an object that is to be carried on the bicycle, an artificial intelligence-based imaging unit 4 to determine dimensions of the object, a drawer arrangement 2 to increase dimensions of the frame 1, a pair of telescopically operated rods 6 to extend/retract for positioning a suction cup 8 on top portion of the object in view of adhering to the object for securing the object on the frame 1, a LiDAR sensor to determine unevenness of the surface on which the user is riding the bicycle, an electromagnetic spring to adjust suspension of the frame 1, and a pair of LED's 5 for producing light beams to act as a signal in view of enhancing communication with other individuals.

No. of Pages : 16 No. of Claims : 4

(12) PATENT APPLICATION PUBLICATION
(21) Application No.202411025574 A
(19) INDIA
(22) Date of filing of Application :28/03/2024
(43) Publication Date : 14/11/2025

(54) Title of the invention : AUTOMATED NEEDLE THREADING DEVICE

(51) International classification	:B61B0001020000, D05B0087020000, E21B0015020000, G02B0021360000, E01F0001000000
(31) Priority Document No	:NA
(32) Priority Date	:NA
(33) Name of priority country	:NA
(86) International Application No	:NA
Filing Date	:NA
(87) International Publication No	: NA
(61) Patent of Addition to Application Number	:NA
Filing Date	:NA
(62) Divisional to Application Number	:NA
Filing Date	:NA

(71)**Name of Applicant :**
1)Shobhit Institute of Engineering & Technology (Deemed to-be University)
Address of Applicant :NH-58, Dulhera Marg, Modipuram, Meerut-250110, Uttar Pradesh, India. Meerut Uttar Pradesh India
(72)**Name of Inventor :**
1)M. Moni
2)Nitin Kumar
3)Nimra
4)Neha Vashishta

(57) Abstract :
An automated needle threading device, comprising a platform 1 positioned on a fixed surface, user access touch enabled screen 2 is installed the platform 1 to give input commands for threading a needle, an imaging unit 3 mounted on platform 1 for detecting cloth type along with dimensions of hole on cloth that is to be stitched, a chamber 4installed on platform 1 and configured with plurality of U-shaped plates 5 stored with needles, a telescopically operated gripper 6 configured on platform 1 for gripping the needle and accommodating the needle in the cylindrical unit, plurality of spools 7 installed on the platform 1 with different size threads, a robotic arm 8 installed within platform 1 and with a cutter for cutting the unwrapped string, a pointed member 9 installed on the plate via a motorized sliding unit 10 for threading the needle.

No. of Pages : 16 No. of Claims : 5

(12) PATENT APPLICATION PUBLICATION
(21) Application No.202411025575 A
(19) INDIA
(22) Date of filing of Application :28/03/2024
(43) Publication Date : 14/11/2025

(54) Title of the invention : SUPPORTING ASSISTIVE DEVICE FOR CLIMBER PLANT

(51) International classification	:B60S0001080000, A61G0005040000, G01W0001140000, E05F0015710000, G01W0001020000	(71)**Name of Applicant :** **1)Shobhit Institute of Engineering & Technology (Deemed to-be University)** Address of Applicant :NH-58, Dulhera Marg, Modipuram, Meerut-250110, Uttar Pradesh, India. Meerut Uttar Pradesh India (72)**Name of Inventor :** **1)Sahdev Singh** **2)Manoj Kumar** **3)Reetesh Pratap Singh** **4)Sonam Arya**
(31) Priority Document No	:NA	
(32) Priority Date	:NA	
(33) Name of priority country	:NA	
(86) International Application No	:NA	
Filing Date	:NA	
(87) International Publication No	: NA	
(61) Patent of Addition to Application Number	:NA	
Filing Date	:NA	
(62) Divisional to Application Number	:NA	
Filing Date	:NA	

(57) Abstract :
A supporting assistive device for climber plant comprises of a rectangular frame 1 positioned over a ground surface, an artificial intelligence based imaging unit 3 installed over the frame 1 to determines height of the climber plant, pair of motorized drawer arrangement installed in each of the rods 4 to provide extension to the rods 4, multiple motorized rollers configured with the shaft to unwrap a string wrapped over the rollers, a weather sensing module includes a anemometer LDR (Light Dependent Resistor) sensor and rain sensor installed over the frame 1 to monitor wind speed sunlight intensity and rain in surroundings, an acoustic sensor installed over the frame 1 to monitor presence of any insect in the surroundings, an electronic nozzle installed with a chamber to spray a repellent solution over the detected insects, an NPK sensor installed over the frame 1 to monitor nutrient level of soil of the ground.

No. of Pages : 17 No. of Claims : 9

(12) PATENT APPLICATION PUBLICATION
(21) Application No.202515094746 A
(19) INDIA
(22) Date of filing of Application :01/10/2025
(43) Publication Date : 14/11/2025

(54) Title of the invention : APPLICATION AND SERVICE CONTEXT AWARE CELL SELECTION

(51) International classification	:H04W0064000000, H04W0048200000, H04W0004020000, H04W0048180000, H04W0036000000
(31) Priority Document No	:17/446,123
(32) Priority Date	:26/08/2021
(33) Name of priority country	:U.S.A.
(86) International Application No	:NA
Filing Date	:NA
(87) International Publication No	: NA
(61) Patent of Addition to Application Number	:NA
Filing Date	:NA
(62) Divisional to Application Number	:202214034500
Filed on	:16/06/2022

(71)**Name of Applicant :**
1)APPLE INC.
Address of Applicant :One Apple Park Way Cupertino, California 95014, United States of America U.S.A.
(72)**Name of Inventor :**
1)CILI, Gencer
2)RAHME, Rawad
3)GOINDANI, Mahak
4)AKDIM, Nabil
5)SIMSAR, Enis

(57) Abstract :
This disclosure relates to techniques for performing application context 5 aware cell selection in a wireless communication system. A wireless device may determine a current location of the wireless device. The wireless device may determine cells associated with the current location of the wireless device. Application context based metric information may be determined for the cells associated with the current location of the wireless device. The wireless device 10 may determine a cell with which to associate from the cells associated with the current location of the wireless device based at least in part on the application context based metric information. 15

No. of Pages : 60 No. of Claims : 16

(12) PATENT APPLICATION PUBLICATION
(21) Application No.202411025483 A
(19) INDIA
(22) Date of filing of Application :28/03/2024
(43) Publication Date : 14/11/2025

(54) Title of the invention : AUTOMATED EMULSION SPREADING DEVICE

(51) International classification	:G06F0003041000, G06F0003010000, B65G0023080000, B62B0005000000, G05D0001020000
(31) Priority Document No	:NA
(32) Priority Date	:NA
(33) Name of priority country	:NA
(86) International Application No	:NA
Filing Date	:NA
(87) International Publication No	: NA
(61) Patent of Addition to Application Number	:NA
Filing Date	:NA
(62) Divisional to Application Number	:NA
Filing Date	:NA

(71)**Name of Applicant :**
1)Chandigarh Group of Colleges
Address of Applicant :Landran Kharar Banur Highway, Sector 112, Sahibzada Ajit Singh Nagar, Landran, Mohali, Punjab-140307, India. Mohali Punjab India
(72)**Name of Inventor :**
1)Dr. Tejinder Pal Singh Brar
2)Dr. Simrat Kaur
3)Gautam pareek
4)Garima

(57) Abstract :
An automated emulsion spreading device comprises a frame having a first 1 and second 2 portion, first 1 portion is arranged with a touch interactive display panel 3 that is accessed by a user for providing input, an artificial intelligence-based imaging unit 4 installed on the frame determine dimensions of the surface, plurality of motorized wheels 5 arranged underneath the frame moving the frame over the evaluated area, a motorized roller 6 is arranged at the second 2 portion by means of a pair of extendable links 7 for positioning the roller 6 in contact with the area on the surface, and plurality of electronically controlled valves 9 are integrated on the roller, each connected with the chamber 8 for dispensing the user-specified emulsion from the chamber 8 on surface of the roller.

No. of Pages : 15 No. of Claims : 5

(12) PATENT APPLICATION PUBLICATION
(21) Application No.202411025484 A
(19) INDIA
(22) Date of filing of Application :28/03/2024
(43) Publication Date : 14/11/2025

(54) Title of the invention : GROUND FENCING INSTALLATION DEVICE

(51) International classification	:A63B0022000000, A63B0071020000, H04W0084040000, A47L0009320000, H04L0001000000
(31) Priority Document No	:NA
(32) Priority Date	:NA
(33) Name of priority country	:NA
(86) International Application No	:NA
Filing Date	:NA
(87) International Publication No	: NA
(61) Patent of Addition to Application Number	:NA
Filing Date	:NA
(62) Divisional to Application Number	:NA
Filing Date	:NA

(71)**Name of Applicant :**
1)Chandigarh Group of Colleges
Address of Applicant :Landran Kharar Banur Highway, Sector 112, Sahibzada Ajit Singh Nagar, Landran, Mohali, Punjab-140307, India. Mohali Punjab India
(72)**Name of Inventor :**
1)Dr. Chamkaur Singh
2)Anuradha Saini
3)Anmol Narang
4)Sourav

(57) Abstract :
A ground fencing installation device, comprising an elongated hollow frame 1 attached with a handle 4 gripped by a user and housed with plurality of fencing poles 2, a microphone 3 is positioned on the handle 4 for enabling a user to give voice commands, an imaging unit 5 mounted on the handle 4, to create a 3-D mapping of a ground surface, a telescopically operated pusher 6 installed within the frame 1 for positioning each of the poles 2 between a pair of motorized clamps 7 installed within the frame 1, a pair of telescopically operated grippers 8 installed with the frame 1 for gripping free-ends of metal wires from a pair of spools 9 configured on the frame 1 for constructing a boundary via the poles 2 and strings and a robotic arm 10 installed with the frame 1 and equipped with a cutter for cutting the strings.

No. of Pages : 15 No. of Claims : 5

(12) PATENT APPLICATION PUBLICATION
(21) Application No.202514024204 A
(19) INDIA
(22) Date of filing of Application :18/03/2025
(43) Publication Date : 14/11/2025

(54) Title of the invention : CONTROL APPARATUS FOR VEHICLE

(51) International classification	:G08G0001160000, B60T0007220000, B60Q0001440000, G01S0013931000, B60W0030090000
(31) Priority Document No	:2024-077890
(32) Priority Date	:13/05/2024
(33) Name of priority country	:Japan
(86) International Application No	:NA
Filing Date	:NA
(87) International Publication No	: NA
(61) Patent of Addition to Application Number	:NA
Filing Date	:NA
(62) Divisional to Application Number	:NA
Filing Date	:NA

(71)**Name of Applicant :**
1)Suzuki Motor Corporation
Address of Applicant :300 Takatsuka-cho, Chuo-ku, Hamamatsu-shi, Shizuoka 432-8611, Japan Japan
(72)**Name of Inventor :**
1)WATANABE, Kazushi

(57) Abstract :
When there is a risk of the vehicle colliding with a forward obstacle, braking force is generated by automatic braking. During deceleration due to the automatic braking, a rear-end collision determination value DEC that indicates the risk of the following vehicle rear-ending the vehicle is calculated, and based on comparison between the rear-end collision determination value DEC and a predetermined determination threshold Dth1, it is determined whether there is a risk of rear-end collision with the following vehicle or not. When it is determined that there is a risk of rear-end collision with the following vehicle, deceleration of the vehicle due to the automatic braking is restricted. The weight data of the following vehicle is obtained through communication between the vehicle and the following vehicle, and the determination threshold Dth1 is variably set according to the following vehicle weight indicated by the weight data (Dth11, Dth12).

No. of Pages : 73 No. of Claims : 10

(12) PATENT APPLICATION PUBLICATION
(21) Application No.202517067907 A
(19) INDIA
(22) Date of filing of Application :16/07/2025
(43) Publication Date : 14/11/2025

(54) Title of the invention : FORMULATIONS AND METHODS FOR DELIVERING DIETARY AND PHARMACEUTICAL INGREDIENTS

(51) International classification	:A23L 2/52, A23L 29/206, A23L 29/231, A23L 29/256, A61K 9/00
(31) Priority Document No	:2219597.8
(32) Priority Date	:22/12/2022
(33) Name of priority country	:U.K.
(86) International Application No	:PCT/IB2023/063180
Filing Date	:22/12/2023
(87) International Publication No	:WO 2024/134616
(61) Patent of Addition to Application Number	:NA
Filing Date	:NA
(62) Divisional to Application Number	:NA
Filing Date	:NA

(71)**Name of Applicant :**
1)GELTEQ LIMITED
Address of Applicant :641 Glenhuntly Road Caulfield, Victoria VIC 3162 Australia
(72)**Name of Inventor :**
1)GIVONI, Nathan Jacob
2)HUYNH, Julie
3)WYNNE, Paul Michael
4)TOLOTCHKOV, Kristina

(57) Abstract :
The invention relates to a base gel formulation into which nutritional or pharmaceutical ingredients can be incorporated. The base formulation has been designed for people who are dysphagic. The base formulation comprises three different gelling agents, the amounts of which are varied, such that the formulated gel conforms with the International Dysphagia Diet Standardisation Initiative (IDDS) 2019, being characterises as a type 1 to type 4 product. It comprises, as a primary gelling agent, an alginate, which is cross linked by way of divalent cations to provide it's structural integrity and the gelling properties are further modified by the inclusion of a secondary and tertiary gelling agent, respectively a low methoxy pectin and an agar. The gel comprises significant amounts of water (hence the type 1 to 4 products are classified as drinks), although the class 3 and 4 products may also be classed as foods. The gels also comprise a pH modifying agent and a preservative, and may additionally comprise a flavouring.

No. of Pages : 18 No. of Claims : 11

(12) PATENT APPLICATION PUBLICATION
(21) Application No.202411024929 A
(19) INDIA
(22) Date of filing of Application :27/03/2024
(43) Publication Date : 14/11/2025

(54) Title of the invention : AUTOMATED TYRE ENGRAVING DEVICE

(51) International classification	:H01S0003067000, B61B0001020000, G06F0021310000, B41M0005240000, F16M0011040000	(71)**Name of Applicant :** **1)Chandigarh University** Address of Applicant :National Highway 95, Chandigarh-Ludhiana Highway, Mohali, Punjab 140413, India. Mohali Punjab India **2)Chandigarh University Technology Business Incubator**
(31) Priority Document No	:NA	(72)**Name of Inventor :**
(32) Priority Date	:NA	**1)Jasgurpreet Singh**
(33) Name of priority country	:NA	
(86) International Application No	:NA	
Filing Date	:NA	
(87) International Publication No	: NA	
(61) Patent of Addition to Application Number	:NA	
Filing Date	:NA	
(62) Divisional to Application Number	:NA	
Filing Date	:NA	

(57) Abstract :
An automated tyre engraving device, comprising of a housing 1 positioned over a ground surface by means of multiple omnidirectional wheels 2 installed beneath the housing 1 , a touch interactive display panel 4 to enable a user to provide input regrading information that is to be marked over the tyres, a pair of the pneumatic link 5 to retract in view of releasing one of the tyre over a motorized conveyor 6, an artificial intelligence based imaging unit 7 to determines dimensions of the tyre, multiple telescopic grippers 9 installed over the platform 8 to extend and grip the trye in a secured manner, a telescopic rod 10 to position a Fiber Laser over the tyre, and a two axis lead screw arrangement 12 to provide translation to engrave user-specified information over the tyre.

No. of Pages : 16 No. of Claims : 6

(12) PATENT APPLICATION PUBLICATION
(21) Application No.202517066445 A
(19) INDIA
(22) Date of filing of Application :11/07/2025
(43) Publication Date : 14/11/2025

(54) Title of the invention : READY-TO-DRINK BEVERAGE BOTTLE CAP

(51) International classification :B65D 51/28
(31) Priority Document No :202320342636.9
(32) Priority Date :21/02/2023
(33) Name of priority country :China
(86) International Application No :PCT/CN2024/073088
Filing Date :18/01/2024
(87) International Publication No :WO 2024/174781
(61) Patent of Addition to Application Number :NA
Filing Date :NA
(62) Divisional to Application Number :NA
Filing Date :NA

(71)**Name of Applicant :**
1)SHENZHEN GAINSEA TECHNOLOGY CO., LTD.
Address of Applicant :Room 317, No. 6 Huanguan South Road, Junzibu Community, Guanlan Subdistrict, Longhua District Shenzhen, Guangdong 518110 China
(72)**Name of Inventor :**
1)YAN, Minghui
2)WU, Wei
3)ZHENG, Xiaodong
4)LIAO, Jie

(57) Abstract :
A ready-to-drink beverage bottle cap, relating to the technical field of bottle caps. The ready-to-drink beverage bottle cap comprises a cover body (1A) and a sealing plug (2A). The cover body (1A) and the sealing plug (2A) define a sealed storage cavity (4A). A pressing portion (11A) can drive, under the action of an external force, an elastic portion (12A) to deform and move downwards, and a pushing column (14A) synchronously pushes the sealing plug (2A) to move downwards, so that the sealing plug (2A) is disconnected from the bottom of a cover cylinder (15A) so as to open the storage cavity (4A).

No. of Pages : 16 No. of Claims : 10

(12) PATENT APPLICATION PUBLICATION
(21) Application No.202517066466 A
(19) INDIA
(22) Date of filing of Application :11/07/2025
(43) Publication Date : 14/11/2025

(54) Title of the invention : METHOD AND APPARATUS USED IN NODE FOR WIRELESS COMMUNICATION

(51) International classification :H04W 52/02
(31) Priority Document No :202211611704.3
(32) Priority Date :14/12/2022
(33) Name of priority country :China
(86) International Application No :PCT/CN2023/134209
Filing Date :27/11/2023
(87) International Publication No :WO 2024/125276
(61) Patent of Addition to Application Number :NA
Filing Date :NA
(62) Divisional to Application Number :NA
Filing Date :NA

(71)**Name of Applicant :**
1)SHANGHAI LANGBO COMMUNICATION TECHNOLOGY COMPANY LIMITED
Address of Applicant :Room A2117, Building B, No.555, DongChuan Road Minhang District, Shanghai 200240 China
(72)**Name of Inventor :**
1)LIU, Zheng
2)ZHANG, Xiaobo

(57) Abstract :
Disclosed in the present application are a method and apparatus used in a node for wireless communication. The method comprises: a node receiving a first information block and monitoring a target wake-up signal, wherein the first information block is used for determining X1 configuration sets, and any one of the X1 configuration sets comprises at least one configuration parameter value; and the node determining whether to monitor first signaling in a first occasion, wherein the target wake-up signal carries a second information block, the second information block is used for determining whether to monitor the first signaling in the first occasion, a target configuration set is one of the X1 configuration sets, a monitor of the target wake-up signal belongs to a first device group, at least one of an identifier of the first device group or the time-domain position of the first occasion is used for determining the target configuration set from among the X1 configuration sets, and an identifier of the monitor of the target wake-up signal is used for determining the first occasion. The present application improves the performance.

No. of Pages : 67 No. of Claims : 10

(12) PATENT APPLICATION PUBLICATION
(21) Application No.202517066538 A
(19) INDIA
(22) Date of filing of Application :11/07/2025
(43) Publication Date : 14/11/2025

(54) Title of the invention : ALPP-SPECIFIC VARIANT ANTIGEN BINDING MOLECULES

(51) International classification	:C12N 9/16, A61K 39/00, A61K 47/68, A61P 35/00
(31) Priority Document No	:2219467.4
(32) Priority Date	:21/12/2022
(33) Name of priority country	:U.K.
(86) International Application No	:PCT/EP2023/087391
Filing Date	:21/12/2023
(87) International Publication No	:WO 2024/133763
(61) Patent of Addition to Application Number	:NA
Filing Date	:NA
(62) Divisional to Application Number	:NA
Filing Date	:NA

(71)**Name of Applicant :**
1)ALMAC DISCOVERY LIMITED
Address of Applicant :Almac House, 20 Seagoe Industrial Estate Craigavon BT63 5QD U.K.
(72)**Name of Inventor :**
1)COTTON, Graham John
2)TRUMPER, Paul Richard
3)MCLEAN, Estelle
4)WAPPETT, Mark
5)CRANSTON, Aaron

(57) Abstract :
The present invention relates to alkaline phosphatase, placental type (ALPP) and/or alkaline phosphatase, germ cell type (ALPPL2) specific antigen binding molecules and associated fusion proteins and conjugates and methods of producing the same. In a further aspect, the present invention relates to conjugated single domain antibodies (VHH domains).

No. of Pages : 168 No. of Claims : 48

(12) PATENT APPLICATION PUBLICATION
(21) Application No.202517068838 A
(19) INDIA
(22) Date of filing of Application :18/07/2025
(43) Publication Date : 14/11/2025

(54) Title of the invention : A PARK LOCK SYSTEM FOR VEHICLES AND PACKAGING OF THE SAME

(51) International classification :F16H 63/34
(31) Priority Document No :BE 2022/6118
(32) Priority Date :30/12/2022
(33) Name of priority country :Belgium
(86) International Application No :PCT/EP2023/087973
Filing Date :29/12/2023
(87) International Publication No :WO 2024/141633
(61) Patent of Addition to Application Number :NA
Filing Date :NA
(62) Divisional to Application Number :NA
Filing Date :NA

(71)**Name of Applicant :**
1)STELLANTIS E-TRANSMISSIONS NV
Address of Applicant :Bourgetlaan 20 1130 Brussel Belgium
(72)**Name of Inventor :**
1)SMID, Peter Mark

(57) Abstract :
The present disclosure envisages a park lock system (100) for vehicle and the packaging of the system (100) relative to a transmission housing. The axis A-A of actuation of an actuation means (112) is oriented at an angle with respect to the axis B-B of reciprocation of a wedging-element (118). A conversion-linkage (132) is provided between an actuation rod (130) and the wedging-element (118) to change the direction of motion. The advantage of the park lock system (100) is that the mounting of actuation means (112) on transmission housing is simplified, since the actuator means (112) can now be mounted on a flat surface of the housing (140).

No. of Pages : 18 No. of Claims : 15

(12) PATENT APPLICATION PUBLICATION
(21) Application No.202517067022 A
(19) INDIA
(22) Date of filing of Application :14/07/2025
(43) Publication Date : 14/11/2025

(54) Title of the invention : VALVES INCLUDING SURFACE COATINGS

(51) International classification	:C23C 4/06, C25D 3/12, C25D 5/12, C25D 3/56, B32B 15/04
(31) Priority Document No	:63/433290
(32) Priority Date	:16/12/2022
(33) Name of priority country	:U.S.A.
(86) International Application No	:PCT/US2023/084475
Filing Date	:16/12/2023
(87) International Publication No	:WO 2024/130226
(61) Patent of Addition to Application Number	:NA
Filing Date	:NA
(62) Divisional to Application Number	:NA
Filing Date	:NA

(71)**Name of Applicant :**
1)MAXTERIAL, INC.
Address of Applicant :1061 Serpentine Ln, Ste A Pleasanton, CA 94566 U.S.A.
(72)**Name of Inventor :**
1)HAGHDOOST, Atieh
2)KARGAR, Mehdi
3)ILGAR, Ersan
4)CHURCH, Daniel

(57) Abstract :
Valves with a coated surface are described. A surface of the valve can include a surface coating. For example, the surface coating can include many different materials and. may include a metal or metal alloy such as, for example, a molybdenum alloy.

No. of Pages : 74 No. of Claims : 23

(12) PATENT APPLICATION PUBLICATION
(21) Application No.202517067058 A
(19) INDIA
(22) Date of filing of Application :14/07/2025
(43) Publication Date : 14/11/2025

(54) Title of the invention : HETEROCYCLIC COMPOUNDS AND USES THEREOF

(51) International classification	:C07D 231/56, A61K 31/416, A61K 31/4245, A61K 31/4439, A61P 1/04
(31) Priority Document No	:2022903880
(32) Priority Date	:16/12/2022
(33) Name of priority country	:Australia
(86) International Application No	:PCT/AU2023/051235
Filing Date	:30/11/2023
(87) International Publication No	:WO 2024/124279
(61) Patent of Addition to Application Number	:NA
Filing Date	:NA
(62) Divisional to Application Number	:NA
Filing Date	:NA

(71)**Name of Applicant :**
1)CERTA THERAPEUTICS PTY LTD
Address of Applicant :Level 9 31 Queen Street Melbourne, Victoria 3000 Australia
(72)**Name of Inventor :**
1)MITCHELL, Lorna
2)BURNS, Chris
3)GARNIER, Jean-Marc
4)POWELL, Jonathan
5)DORE, Antonio
6)DOWNHAM, Robert

(57) Abstract :
The present disclosure relates to compounds useful as modulators of proton-activated G protein-coupled receptors, and pharmaceutical compositions comprising same. The present disclosure also relates to methods of using such compounds and pharmaceutical compositions for the treatment and/or prevention of diseases, disorders or conditions mediated by proton-activated G protein-coupled receptors.

No. of Pages : 146 No. of Claims : 60

(12) PATENT APPLICATION PUBLICATION
(21) Application No.202517067077 A
(19) INDIA
(22) Date of filing of Application :14/07/2025
(43) Publication Date : 14/11/2025

(54) Title of the invention : SYSTEMS AND METHODS FOR MANUFACTURING PRINTED CIRCUIT BOARDS

(51) International classification	:B23H 3/00, B23H 3/04, B23K 26/36, B23K 101/40
(31) Priority Document No	:63/436971
(32) Priority Date	:04/01/2023
(33) Name of priority country	:U.S.A.
(86) International Application No	:PCT/US2024/010265
Filing Date	:04/01/2024
(87) International Publication No	:WO 2024/148138
(61) Patent of Addition to Application Number	:NA
Filing Date	:NA
(62) Divisional to Application Number	:NA
Filing Date	:NA

(71)**Name of Applicant :**
1)PATIL, Prashant
Address of Applicant :702 Green St Apt 2 Cambridge, MA 02139 U.S.A.
(72)**Name of Inventor :**
1)PATIL, Prashant

(57) Abstract :
Systems and methods for overcoming technical problems associated with machining and manufacturing printed circuit boards. In some embodiments, the systems and methods include a process to remove or reduce defects in initially created printed circuit board (PCB) traces. For example, a method can include a process to remove or reduce burrs of laser micromachined PCB traces (which can be electrically isolated from each other). In some cases, a material is deposited over the PCB traces, and the depositing results in a conducting layer that electrically connects all or most of the PCB traces and provides an electrical connection for removing or reducing the defects in the PCB traces.

No. of Pages : 44 No. of Claims : 20

(12) PATENT APPLICATION PUBLICATION
(21) Application No.202517069432 A
(19) INDIA
(22) Date of filing of Application :21/07/2025
(43) Publication Date : 14/11/2025

(54) Title of the invention : COVER PLATE AND LITHIUM BATTERY

(51) International classification :H01M 50/188
(31) Priority Document No :202223471074.2
(32) Priority Date :23/12/2022
(33) Name of priority country :China
(86) International Application No :PCT/CN2023/141602
Filing Date :25/12/2023
(87) International Publication No :WO 2024/131984
(61) Patent of Addition to Application Number :NA
Filing Date :NA
(62) Divisional to Application Number :NA
Filing Date :NA

(71)**Name of Applicant :**
1)SVOLT ENERGY TECHNOLOGY CO., LTD.
Address of Applicant :No. 8899 Xincheng Avenue, Jintan District Changzhou, Jiangsu 213200 China
(72)**Name of Inventor :**
1)XIA, Tianjun
2)LIU, Jing
3)YAN, Huailei
4)SHEN, Liangjun
5)XIN, Xueqian

(57) Abstract :
Disclosed in the present application are a cover plate and a lithium battery. The cover plate comprises: an upper plastic body, the upper plastic body being provided with a sealing part, and the upper plastic body and a glossy aluminum sheet being in sealed connection by means of the sealing part; and a sealing ring, the sealing ring abutting against the hole inner wall of a post hole in a lower plastic member. The present application is provided with the sealing part and the sealing ring, and after the cover plate is assembled, the sealing part can seal the gap between the upper plastic body and the glossy aluminum sheet, so that during a production liquid injection process, even if electrolytes contaminate upper plastic bodies, the electrolytes cannot pass through gaps between the upper plastic bodies and glossy aluminum sheets to pollute the glossy aluminum sheets, thereby avoiding a series of subsequent problems, such as the problem of electrolytes contaminating lower plastic members via post holes in glossy aluminum sheets and the problem of affecting the casing voltage of lithium batteries.

No. of Pages : 7 No. of Claims : 10

(12) PATENT APPLICATION PUBLICATION
(21) Application No.202517069450 A
(19) INDIA
(22) Date of filing of Application :21/07/2025
(43) Publication Date : 14/11/2025

(54) Title of the invention : AUTODEGRADABLE PLASTICS

(51) International classification	:C12N 11/04, C12N 11/08, C12N 11/096, C12N 9/20, C08J 11/10
(31) Priority Document No	:2219601.8
(32) Priority Date	:22/12/2022
(33) Name of priority country	:U.K.
(86) International Application No	:PCT/EP2023/087436
Filing Date	:21/12/2023
(87) International Publication No	:WO 2024/133786
(61) Patent of Addition to Application Number	:NA
Filing Date	:NA
(62) Divisional to Application Number	:NA
Filing Date	:NA

(71)**Name of Applicant :**
1)E.V.A BIOSYSTEMS LIMITED
Address of Applicant :3/4 Savile Place Edinburgh EH9 3EB U.K.
(72)**Name of Inventor :**
1)SPEAKMAN, Alexander Joseph

(57) Abstract :
Disclosed is an autodegradable plastic material impregnated with a genetically engineered bacteria, in which the bacteria are engineered to include a genetic switch that is activated by an environmental factor. Activation of the switch causes expression of an enzyme that degrades the plastic.

No. of Pages : 35 No. of Claims : 25

(12) PATENT APPLICATION PUBLICATION
(21) Application No.202517069486 A
(19) INDIA
(22) Date of filing of Application :21/07/2025
(43) Publication Date : 14/11/2025

(54) Title of the invention : METHODS FOR DIAGNOSING OR MONITORING A DISEASE IN A SUBJECT USING SPECTROSCOPY

(51) International classification	:G01N 21/84, G01N 21/35, G01N 21/65, G01N 33/574, G01J 3/28
(31) Priority Document No	:63/435371
(32) Priority Date	:27/12/2022
(33) Name of priority country	:U.S.A.
(86) International Application No	:PCT/IB2023/063176
Filing Date	:22/12/2023
(87) International Publication No	:WO 2024/141907
(61) Patent of Addition to Application Number	:NA
Filing Date	:NA
(62) Divisional to Application Number	:NA
Filing Date	:NA

(71)**Name of Applicant :**
1)KING ABDULLAH UNIVERSITY OF SCIENCE AND TECHNOLOGY
Address of Applicant :Technology Transfer Office 4700 King Abdullah University of Science and Technology Thuwal 23955-6900 Saudi Arabia
2)KING SAUD UNIVERSITY
(72)**Name of Inventor :**
1)INCITTI, Roberto
2)GOJOBORI, Takashi
3)LIBERALE, Carlo
4)NABHOLTZ, Jean-Marc Andre
5)AL-SALEH, Khalid
6)GRASSI, Elisa
7)BAHADOOR, Mohun R.K.

(57) Abstract :
A method for diagnosing a disease, such as breast cancer, in a biological sample using spectroscopic data is described. The method involves a computer-implemented method that converts spectroscopic vibrational from the sample into a profile and scores the profile using a pair of reference profiles. Based on the score and a threshold, it can be determined whether the subject from which the sample was obtained has a disease, and, if so, to what extent. The method also allows detection of early and pre-disease states in subjects based on the detection of the signal of low concentration analytes that are indicative of early or incipient disease states. The method is non-invasive, non-subjective, highly specific, and sensitive. The method affords the application of a single standard of diagnostic accuracy, independent of the availability of expert pathologists.

No. of Pages : 60 No. of Claims : 37

(12) PATENT APPLICATION PUBLICATION
(21) Application No.202517067614 A
(19) INDIA
(22) Date of filing of Application :15/07/2025
(43) Publication Date : 14/11/2025

(54) Title of the invention : DELAYED PROOF OF VALIDITY

(51) International classification	:H04L 9/00, H04L 9/32
(31) Priority Document No	:22214465.1
(32) Priority Date	:19/12/2022
(33) Name of priority country	:EPO
(86) International Application No	:PCT/EP2023/086754
Filing Date	:19/12/2023
(87) International Publication No	:WO 2024/133341
(61) Patent of Addition to Application Number	:NA
Filing Date	:NA
(62) Divisional to Application Number	:NA
Filing Date	:NA

(71)**Name of Applicant :**
1)BTQ AG
Address of Applicant :Dr. Grass-Strasse 12 9490 Vaduz Liechtenstein
(72)**Name of Inventor :**
1)KUO, Po-Chun
2)CHENG, Chen-Mou

(57) Abstract :
Methods and systems for delaying generation and integration of proofs of validity into a block of a blockchain, operated by a network, each proof of validity associated with a plurality of different transactions are disclosed. The method may comprise receiving a plurality of different transactions, each transaction comprising transactions data and associated validity data; producing a plurality of new blocks on the blockchain, the new blocks comprising the transaction data; generating in parallel, during a predetermined time, one or more proofs of validity associated with one or more blocks from the plurality of new blocks, based on associated validity data; and incorporating, after the predetermined time, the one or more proofs of validity in the blockchain.

No. of Pages : 53 No. of Claims : 54

(12) PATENT APPLICATION PUBLICATION
(21) Application No.202517067682 A
(19) INDIA
(22) Date of filing of Application :16/07/2025
(43) Publication Date : 14/11/2025

(54) Title of the invention : REGENERATION OF POLYMERIC CYCLODEXTRIN ADSORBENTS

(51) International classification	:B01J 20/26, B01J 20/30, B01J 20/32
(31) Priority Document No	:63/479611
(32) Priority Date	:12/01/2023
(33) Name of priority country	:U.S.A.
(86) International Application No	:PCT/US2024/011236
Filing Date	:11/01/2024
(87) International Publication No	:WO 2024/151850
(61) Patent of Addition to Application Number	:NA
Filing Date	:NA
(62) Divisional to Application Number	:NA
Filing Date	:NA

(71)**Name of Applicant :**
1)CYCLOPURE, INC.
Address of Applicant :2430 N Halsted St. 4th Floor Chicago, Illinois 60614 U.S.A.
(72)**Name of Inventor :**
1)LING, Yuhan
2)BARIN, Gokhan
3)TEODORO, Olivia Therese
4)WANG, Ri

(57) Abstract :
Methods for removing PFAS from cationic CDP adsorbents having adsorbed PFAS are provided. The method comprises contacting a volume of the cationic CDP adsorbent with a regeneration medium and separating the cationic CDP adsorbent from the regeneration medium.

No. of Pages : 21 No. of Claims : 28

(12) PATENT APPLICATION PUBLICATION
(21) Application No.202517067802 A
(19) INDIA
(22) Date of filing of Application :16/07/2025
(43) Publication Date : 14/11/2025

(54) Title of the invention : METHOD AND DEVICE FOR WI-FI BASED PRESENCE DETECTION

(51) International classification	:G01S 5/02, G01S 5/00, H04B 17/309, H04W 24/08, H04W 84/12
(31) Priority Document No	:63/456723
(32) Priority Date	:03/04/2023
(33) Name of priority country	:U.S.A.
(86) International Application No	:PCT/KR2024/004229
Filing Date	:02/04/2024
(87) International Publication No	:WO 2024/210454
(61) Patent of Addition to Application Number	:NA
Filing Date	:NA
(62) Divisional to Application Number	:NA
Filing Date	:NA

(71)**Name of Applicant :**
1)SAMSUNG ELECTRONICS CO., LTD.
Address of Applicant :129, Samsung-ro, Yeongtong-gu Suwon-si Gyeonggi-do 16677 Republic of Korea
(72)**Name of Inventor :**
1)CHEN, Guanbo
2)ZHU, Yuming
3)CHANG, Hao Hsuan
4)CHEN, Hao
5)LI, Songwei
6)NGUYEN, Hoang Viet
7)ADVANI, Siddharth K.

(57) Abstract :
A method for presence detection by a device is provided. The method comprise obtaining channel state information (CSI) related to a wireless fidelity, Wi-Fi; filtering the CSI to remove radio frequency (RF) interference; detecting for motion in a space during a first observation window based on determining whether macro-movements are present in the filtered CSI; in response to detecting the motion in the space, determining whether micro-movements and breath signals are present in the filtered CSI, during a second observation window; providing an indication that the space is occupied based on determining that the micro-movements and the breath signals are present in the filtered CSI; and providing an indication that the space is not occupied based on determining that the micro-movements and the breath signals are not present in the filtered CSI.

No. of Pages : 23 No. of Claims : 15

(12) PATENT APPLICATION PUBLICATION
(21) Application No.202517069765 A
(19) INDIA
(22) Date of filing of Application :22/07/2025
(43) Publication Date : 14/11/2025

(54) Title of the invention : 25-HYDROXY-CHOLEST-5-EN-3-SULFATE CHOLINE, FORMULATIONS THEREOF AND METHODS FOR PREPARING, AND MEDICAL USES OF SAME

(51) International classification	:A61K 9/14, A61K 9/16, A61K 9/20, A61K 31/575, A61P 1/16
(31) Priority Document No	:63/435151
(32) Priority Date	:23/12/2022
(33) Name of priority country	:U.S.A.
(86) International Application No	:PCT/US2023/085845
Filing Date	:22/12/2023
(87) International Publication No	:WO 2024/138203
(61) Patent of Addition to Application Number	:NA
Filing Date	:NA
(62) Divisional to Application Number	:NA
Filing Date	:NA

(71)**Name of Applicant :**
1)DURECT CORPORATION
Address of Applicant :10260 Bubb Road Cupertino, California 95014 U.S.A.
(72)**Name of Inventor :**
1)MIKSZTAL, Andrew R.
2)CHAO, Wendy
3)HOUSTON, Travis Lee
4)SU, Huey-Ching
5)CHALLAPALLI, Prasad V.
6)PATEL, Asma Ibrahim
7)SOLANKI, Nayan

(57) Abstract :
25HC3S choline and crystalline 25HC3S choline are described herein. Pharmaceutical formulations of 25HC3S choline such as with crystalline 25HC3S choline and methods of treating or preventing disease with same such as nonalcoholic fatty liver disease (NAFLD), nonalcoholic steatohepatitis (NASH), alcoholic hepatitis, acute kidney injury (AKI), psoriasis, atherosclerosis, hypercholesterolemia, hypertriglyceridemia, alcoholic fatty liver disease (AFLD), alcoholic steatohepatitis (ASH), leptin resistance, leptin deficiency, a diabetes condition, an autoimmune condition, an inflammatory condition, a neurological condition, Epstein Barr virus-related growth, and conditions related to fat accumulation and inflammation are further disclosed herein. Methods for preparing 25HC3S, including crystalline 25HC3S choline, are also provided.

No. of Pages : 179 No. of Claims : 16

(12) PATENT APPLICATION PUBLICATION
(21) Application No.202517069861 A
(19) INDIA
(22) Date of filing of Application :22/07/2025
(43) Publication Date : 14/11/2025

(54) Title of the invention : METHOD FOR WET AIR OXIDATION REGENERATION OF BIOMASS HYDROGENATION CATALYSTS WITH SWITCHING BETWEEN OXYGEN- AND NITROGEN-ATMOSPHERE; BIOMASS HYDROGENATION METHOD INCLUDING SUCH

(51) International classification	:B01J 23/96, B01J 38/04, B01J 38/06, B01J 38/14, B01J 23/46
(31) Priority Document No	:63/480607
(32) Priority Date	:19/01/2023
(33) Name of priority country	:U.S.A.
(86) International Application No	:PCT/US2024/012060
Filing Date	:18/01/2024
(87) International Publication No	:WO 2024/155845
(61) Patent of Addition to Application Number	:NA
Filing Date	:NA
(62) Divisional to Application Number	:NA
Filing Date	:NA

(71)**Name of Applicant :**
1)VIRENT, INC.
Address of Applicant :3571 ANDERSON STREET MADISON, Wisconsin 53704 U.S.A.
(72)**Name of Inventor :**
1)STEENWINKEL, Edgar
2)VAN STRATEN, Matt
3)BLOMMEL, Paul
4)ANSON, Colin
5)TYSON, George
6)HATCH, Dana M.

(57) Abstract :
The present disclosure provides systems and methods for producing a regenerated hydrogenation catalyst used for hydrogenating a biomass feedstock. The method can include a regeneration cycle, in which a fouled hydrogenation catalyst is contacted with (a) a first flushing medium comprising water and a gaseous phase comprising oxygen and (b) a second flushing medium comprising water and a gaseous phase comprising at least 90% nitrogen by volume. In particular, multiple regeneration cycles can be used to improve efficiency in removing sulfur-containing impurities from the fouled catalyst.

No. of Pages : 32 No. of Claims : 29

(12) PATENT APPLICATION PUBLICATION
(21) Application No.202515094749 A
(19) INDIA
(22) Date of filing of Application :01/10/2025
(43) Publication Date : 14/11/2025

(54) Title of the invention : SPATIAL AUDIO CONTROLLER

(51) International classification	:H04S0007000000, G06F0003160000, H04N0007150000, H04S0005000000, H04S0003000000	(71)**Name of Applicant :** **1)APPLE INC.** Address of Applicant :One Apple Park Way Cupertino, California 95014, United States of America U.S.A.
(31) Priority Document No	:17/339,864	(72)**Name of Inventor :** **1)RAMPRASHAD, Sean A.**
(32) Priority Date	:04/06/2021	**2)CALLAWAY, Peter D.**
(33) Name of priority country	:U.S.A.	**3)CHANG, Jae Woo**
(86) International Application No	:NA	**4)JOHNSON, Martin E.**
Filing Date	:NA	**5)BOOTHE, Daniel K.**
(87) International Publication No	: NA	**6)KOMAROV, Kostyantyn**
(61) Patent of Addition to Application Number	:NA	**7)MIAUTON, Patrick**
Filing Date	:NA	**8)GARRIDO, Christopher M.**
(62) Divisional to Application Number	:202214031271	**9)SHYU, Austin W.**
Filed on	:31/05/2022	**10)SANTHANAM, Karthick**

(57) Abstract :
A method performed a local device that is communicatively coupled with 5 several remote devices, the method includes: receiving, from each remote device with which the local device is engaged in a communication session, an input audio stream; receiving, for each remote device, a set parameters; determining, for each input audio stream, whether the input audio stream is to be 1) rendered individually or 2) rendered as a mix of input audio streams based on the set of parameters; for each input audio 10 stream that is determined to be rendered individually, spatial rendering the input audio stream as an individual virtual sound source that contains only that input audio stream; and for input audio streams that are determined to be rendered as the mix of input audio streams, spatial rendering the mix of input audio streams as a single virtual sound source that contains the mix of input audio streams. 15 To Be Published Figure 3

No. of Pages : 113 No. of Claims : 42

(12) PATENT APPLICATION PUBLICATION
(21) Application No.202517067483 A
(19) INDIA
(22) Date of filing of Application :15/07/2025
(43) Publication Date : 14/11/2025

(54) Title of the invention : OPTICAL STEERING FOR ILLUMINATION OF A TARGET

(51) International classification	:G01S 17/66, G01S 17/46, B23K 26/02, G01S 17/00, H01S 3/10
(31) Priority Document No	:299165
(32) Priority Date	:15/12/2022
(33) Name of priority country	:Israel
(86) International Application No	:PCT/IL2023/051259
Filing Date	:11/12/2023
(87) International Publication No	:WO 2024/127393
(61) Patent of Addition to Application Number	:NA
Filing Date	:NA
(62) Divisional to Application Number	:NA
Filing Date	:NA

(71)**Name of Applicant :**
1)ISRAEL AEROSPACE INDUSTRIES LTD.
Address of Applicant :Ben-Gurion International Airport 7010000 Lod Israel
(72)**Name of Inventor :**
1)SHIMSHI, Liran
2)PASMANIK, Guerman

(57) Abstract :
A system including: an optical steering module configured to receive reflected light, which reflected light includes a portion of a probe light beam reflected from an object, the reflected light including light of a first polarization type, which optical steering module including; a first optical path allowing passage of light of the first polarization type; a second optical path, including an optical steering element, allowing passage of light of a second polarization type; an optical shot generation module optically connected to the optical steering module to receive light from the first optical path and including: a mirror configured to reverse an orientation of light received from the optical steering module, returning the light towards the optical steering module; and a polarization changing element configured to change light of the first polarization type to light of the second polarization type, light returning from the optical shot generation module to the optical steering module passing through the second optical path of the optical steering module; a processor configured to generate control signals for control of the optical steering element, based on a predicted position of the object, to steer light emitted from the second optical path towards the object.

No. of Pages : 25 No. of Claims : 30

(12) PATENT APPLICATION PUBLICATION
(21) Application No.202517069751 A
(19) INDIA
(22) Date of filing of Application :22/07/2025
(43) Publication Date : 14/11/2025

(54) Title of the invention : AN IMPROVED UPLINK LOWER LAYER SPLIT SUPPORTING ADVANCED COMP

(51) International classification	:H04L 25/03, H04L 25/02
(31) Priority Document No	:63/457021
(32) Priority Date	:04/04/2023
(33) Name of priority country	:U.S.A.
(86) International Application No	:PCT/IB2024/053263
Filing Date	:03/04/2024
(87) International Publication No	:WO 2024/209375
(61) Patent of Addition to Application Number	:NA
Filing Date	:NA
(62) Divisional to Application Number	:NA
Filing Date	:NA

(71)**Name of Applicant :**
1)TELEFONAKTIEBOLAGET LM ERICSSON (PUBL)
Address of Applicant :SE-164 83 Stockholm Sweden
(72)**Name of Inventor :**
1)LU, Chenguang
2)BERG, Miguel
3)KARLSSON, Jonas
4)HUANG, Yezi

(57) Abstract :
Methods and systems are described for performing or assisting in joint equalization, DMRS-based joint equalization, or maximum ratio combining. In certain embodiments, the DU requests the RU to send both the equalized DMRS symbols and the equalized data symbols when indicated by a scheduler. The DU can use the equalized DMRS symbols to estimate the effective channel including the equalization done in the RU. Then, the DU performs a joint equalization or DMRS-based joint equalization to the equalized data symbols received from one or more RUs using the effective channel estimates.

No. of Pages : 44 No. of Claims : 9

(12) PATENT APPLICATION PUBLICATION
(21) Application No.202517069764 A
(19) INDIA
(22) Date of filing of Application :22/07/2025
(43) Publication Date : 14/11/2025

(54) Title of the invention : SALTS INCLUDING CRYSTALLINE SALTS OF 25-HYDROXY-CHOLEST-5-EN-3-SULFATE AND METHODS FOR PREPARING SAME

(51) International classification	:C07J 31/00, A61K 31/575, A61P 1/16, A61P 3/06, A61P 9/10
(31) Priority Document No	:NA
(32) Priority Date	:NA
(33) Name of priority country	:NA
(86) International Application No	:PCT/US2022/053981
Filing Date	:23/12/2022
(87) International Publication No	:WO 2024/136884
(61) Patent of Addition to Application Number	:NA
Filing Date	:NA
(62) Divisional to Application Number	:NA
Filing Date	:NA

(71)**Name of Applicant :**
1)DURECT CORPORATION
Address of Applicant :10260 Bubb Road Cupertino, California 95014-4166 U.S.A.
(72)**Name of Inventor :**
1)MIKSZTAL, Andrew R.
2)GONZALEZ, Mario
3)SARD, Howard
4)LIN, WeiQi
5)MORENCY, Cynthia

(57) Abstract :
A number of salts of 25HC3S are provided including crystalline salts of 25HC3S. Included herein are pharmaceutical formulations of salts of the disclosure as well as methods of treating or preventing disease with same such as nonalcoholic fatty liver disease (NAFLD), nonalcoholic steatohepatitis (NASH), alcoholic hepatitis, acute kidney injury (AKI), psoriasis, atherosclerosis, hypercholesterolemia, hypertriglyceridemia, alcoholic fatty liver disease (AFLD), alcoholic steatohepatitis (ASH), leptin resistance, leptin deficiency, a diabetes condition, an autoimmune condition, an inflammatory condition, a neurological condition, Epstein Barr virus-related growth, and conditions related to fat accumulation and inflammation. Methods for preparing salts of the disclosure are also provided.

No. of Pages : 191 No. of Claims : 15

(12) PATENT APPLICATION PUBLICATION
(21) Application No.202517067958 A
(19) INDIA
(22) Date of filing of Application :16/07/2025
(43) Publication Date : 14/11/2025

(54) Title of the invention : SYSTEMS AND METHODS FOR AN ELECTRONIC WALL MOUNTED EXERCISE MACHINE

(51) International classification	:A63B 21/16, A63B 23/035
(31) Priority Document No	:63/433463
(32) Priority Date	:18/12/2022
(33) Name of priority country	:U.S.A.
(86) International Application No	:PCT/IB2023/056058
Filing Date	:06/12/2023
(87) International Publication No	:WO 2024/175972
(61) Patent of Addition to Application Number	:NA
Filing Date	:NA
(62) Divisional to Application Number	:NA
Filing Date	:NA

(71)**Name of Applicant :**
1)AMP FIT ISRAEL LTD
Address of Applicant :Hamasger 35 Tel Aviv, 6721407 Israel
(72)**Name of Inventor :**
1)COHEN, Shahar
2)SEMO, Dan Moshe
3)SHNEORSON, Guy
4)EREZ, Oren

(57) Abstract :
A minimalist wall-mountable exercise machine comprising a vertically wall- mountable beam, an upper bracket for connecting an upper portion of the vertically wall-mountable beam to a first stud in a wall, a lower bracket for connecting a lower portion of the vertically wall-mountable beam to the first stud in the wall, a trolley for riding the vertically wall-mountable beam and being configured to lock at differing positions along the vertically wall-mountable beam, a selectively positionable arm extending from the trolley, the arm configured to receive an exercise force applied thereto, the exercise force including a torque component on the vertically wall-mountable beam, and a T-bar having a first end configured to connect to an intermediate portion of the vertically wall- mountable beam and a second end configured for connection to a second stud spaced from the first stud in the wall to thereby resist the torque component of the exercise force.

No. of Pages : 166 No. of Claims : 21

(12) PATENT APPLICATION PUBLICATION
(21) Application No.202517068065 A
(19) INDIA
(22) Date of filing of Application :16/07/2025
(43) Publication Date : 14/11/2025

(54) Title of the invention : COLOR-CHANGE SENSOR ASSEMBLY AND TRANSPORTATION THEREOF

(51) International classification	:G01N 21/77, G01N 21/78, G01N 21/80, G01N 31/22
(31) Priority Document No	:63/439744
(32) Priority Date	:18/01/2023
(33) Name of priority country	:U.S.A.
(86) International Application No	:PCT/US2024/011977
Filing Date	:18/01/2024
(87) International Publication No	:WO 2024/155789
(61) Patent of Addition to Application Number	:NA
Filing Date	:NA
(62) Divisional to Application Number	:NA
Filing Date	:NA

(71)**Name of Applicant :**
1)SHOCKWATCH, INC. D/B/A SPOTSEE
Address of Applicant :5501 LBJ Freeway, Suite 400 Dallas, TX 75240 U.S.A.
(72)**Name of Inventor :**
1)HEACOCK, Gregory, L.
2)ARMSTRONG, Toby, William

(57) Abstract :
A color change sensor assembly which changes color depending on temperature or time since activation is disclosed. The sensor assembly comprises an indicator that changes color based on the concentration of a gas. The assembly comprises a porous material containing the gas at concentrations higher than the gas is found in the atmosphere and the assembly is configured to control diffusion of the gas for example carbon dioxide into the color change indicator. The assembly is enclosed in an impermeable container that has high concentrations of the gas found in the porous material, allowing the sensor assembly to be activated by removing it from the packaging, providing a time-sensitive and temperature-sensitive indicator.

No. of Pages : 28 No. of Claims : 30

(12) PATENT APPLICATION PUBLICATION
(21) Application No.202517070040 A
(19) INDIA
(22) Date of filing of Application :23/07/2025
(43) Publication Date : 14/11/2025

(54) Title of the invention : SURGICAL TOOL HOLDER FOR INTRAOCULAR ROBOTIC SURGICAL SYSTEMS

(51) International classification	:A61B 34/30, A61B 34/00, A61F 9/007, A61B 90/50
(31) Priority Document No	:63/478770
(32) Priority Date	:06/01/2023
(33) Name of priority country	:U.S.A.
(86) International Application No	:PCT/US2024/010586
Filing Date	:05/01/2024
(87) International Publication No	:WO 2024/148331
(61) Patent of Addition to Application Number	:NA
Filing Date	:NA
(62) Divisional to Application Number	:NA
Filing Date	:NA

(71)**Name of Applicant :**
1)HORIZON SURGICAL SYSTEMS, INC.
Address of Applicant :The Enclave, Suite C280, 22619 PCH Malibu, California 90265 U.S.A.
2)THE REGENTS OF THE UNIVERSITY OF CALIFORNIA
(72)**Name of Inventor :**
1)FERGUSON, Peter
2)MA, Ji
3)ROSEN, Jacob

(57) Abstract :
A number of different surgical tool holder assemblies are provided. A number of configurations are suited for use in intraocular robotic surgery. The assembly includes a housing and a kinematic alignment feature on the housing right side and a kinematic alignment feature on the housing left side. There is also a tool sleeve coupled to a surgical instrument and a tool collar coupled to the tool sleeve. There is also a rotary transmission connector on the housing proximal end coupled to a drive shaft and a drive gear, the drive gear engaged to the driven gear. There may also be an alignment plate above the tool holder, the alignment plate having at least one kinematic alignment feature. Several kinematic alignment features are bi-directionally operable.

No. of Pages : 25 No. of Claims : 46

(12) PATENT APPLICATION PUBLICATION
(21) Application No.202517070041 A
(19) INDIA
(22) Date of filing of Application :23/07/2025
(43) Publication Date : 14/11/2025

(54) Title of the invention : AUTONOMOUS TOOL EXCHANGE SYSTEM FOR AUTOMATED AND SEMI-AUTOMATED INTRAOCULAR SURGICAL PROCEDURES

(51) International classification	:A61B 34/30, A61B 34/32, B23Q 3/155, B25J 15/04
(31) Priority Document No	:63/478581
(32) Priority Date	:05/01/2023
(33) Name of priority country	:U.S.A.
(86) International Application No	:PCT/US2024/010569
Filing Date	:05/01/2024
(87) International Publication No	:WO 2024/148316
(61) Patent of Addition to Application Number	:NA
Filing Date	:NA
(62) Divisional to Application Number	:NA
Filing Date	:NA

(71)**Name of Applicant :**
1)HORIZON SURGICAL SYSTEMS, INC.
Address of Applicant :The Enclave, Suite C280, 22619 PCH Malibu, California 90265 U.S.A.
2)THE REGENTS OF THE UNIVERSITY OF CALIFORNIA
(72)**Name of Inventor :**
1)FERGUSON, Peter
2)ROSEN, Jacob
3)HAN, Nathan

(57) Abstract :
Devices, methods, and systems related to an autonomous tool exchange system for automated and semi-automated intraocular surgical procedures are provided. According to various embodiments of the present invention there is, for example, a tool exchange system for an autonomous intraocular surgical robot, having: a detachable rotary tool carousel configured to be releasably engaged to a rotating base, the tool carousel having a plurality of tool assembly docks each arranged around the tool carousel, in which each tool assembly dock is adapted for kinematic coupling to a kinematic coupling on a surgical tool holder assembly, further in which each surgical tool holder assembly comprises an end-effector kinematic coupling adapted and configured for coupling to a corresponding kinematic coupling on a robotic end effector while the surgical tool assembly is engaged with the tool assembly dock. Other embodiments are described herein.

No. of Pages : 20 No. of Claims : 17

(12) PATENT APPLICATION PUBLICATION
(21) Application No.202517070042 A
(19) INDIA
(22) Date of filing of Application :23/07/2025
(43) Publication Date : 14/11/2025

(54) Title of the invention : SURGICAL MICROSCOPES USING RED REFLEX ILLUMINATION

(51) International classification	:G02B 21/06, G02B 27/09, G02B 21/02, A61B 90/30, G02B 21/36
(31) Priority Document No	:63/478813
(32) Priority Date	:06/01/2023
(33) Name of priority country	:U.S.A.
(86) International Application No	:PCT/US2024/010536
Filing Date	:05/01/2024
(87) International Publication No	:WO 2024/148299
(61) Patent of Addition to Application Number	:NA
Filing Date	:NA
(62) Divisional to Application Number	:NA
Filing Date	:NA

(71)**Name of Applicant :**
1)HORIZON SURGICAL SYSTEMS, INC.
Address of Applicant :The Enclave, Suite C280, 22619 PCH Malibu, California 90265 U.S.A.
(72)**Name of Inventor :**
1)DHALLA, Al-Hafeez
2)MURNAN, Andrew

(57) Abstract :
Devices, methods, and systems related to surgical microscopes using red reflex illumination are provided. According to one aspect of the present invention, there is a red reflex surgical microscope system which may have: a red reflex illumination source, an objective lens, and an aperture stop. In certain embodiments, the aperture stop is located between the illumination source and objective lens. An image of the aperture stop may be imaged in proximity to the objective lens, and a size of beams reflected from the objective lens are shortened based on the proximity of the image of the aperture stop to the objective lens. Other embodiments described herein include a red reflex surgical microscope system used in conjunction with an OCT and coupled via a dichroic mirror, with an obstruction configured to minimize glare by being positioned on or adjacent to a side of the dichroic mirror not reflecting OCT light. Other embodiments include an oblique white-light illumination source. Yet other embodiments are described herein.

No. of Pages : 14 No. of Claims : 21

(12) PATENT APPLICATION PUBLICATION
(21) Application No.202517070043 A
(19) INDIA
(22) Date of filing of Application :23/07/2025
(43) Publication Date : 14/11/2025

(54) Title of the invention : DOCKING STATION FOR USE IN OPHTHALMIC PROCEDURES

(51) International classification	:A61F 9/009, A61F 9/007, A61F 9/008
(31) Priority Document No	:63/478851
(32) Priority Date	:06/01/2023
(33) Name of priority country	:U.S.A.
(86) International Application No	:PCT/US2024/010589
Filing Date	:05/01/2024
(87) International Publication No	:WO 2024/148334
(61) Patent of Addition to Application Number	:NA
Filing Date	:NA
(62) Divisional to Application Number	:NA
Filing Date	:NA

(71)**Name of Applicant :**
1)HORIZON SURGICAL SYSTEMS, INC.
Address of Applicant :The Enclave, Suite C280, 22619 PCH Malibu, California 90265 U.S.A.
2)THE REGENTS OF THE UNIVERSITY OF CALIFORNIA
(72)**Name of Inventor :**
1)GERBER, Matthew
2)FERGUSON, Peter
3)KRAUSS, Tyler
4)HUBSCHMAN, Jean-Pierre
5)ROSEN, Jacob

(57) Abstract :
There is a docking device for intraocular surgery having an upper rim having a second diameter, a lower rim having a first diameter and a bottom surface with at least one aperture, and a sidewall extending between the upper rim and the lower rim. There is also an arm having a first portion coupled to a central portion of the upper rim and the lower rim and a second portion configured for connection to a positioning arm. The lower rim also has a lower surface having an adapted contour configured to be secured to the sclera and/or conjunctiva of a procedure eye. Optionally, the lower surface of the upper rim is adapted and configured for releasable engagement with an upper surface of the lower rim. Other variations include a breakaway coupling allowing the suction surface to remain coupled to the procedure eye with other portions of the docking device removed.

No. of Pages : 19 No. of Claims : 17

(12) PATENT APPLICATION PUBLICATION
(21) Application No.202517070103 A
(19) INDIA
(22) Date of filing of Application :23/07/2025
(43) Publication Date : 14/11/2025

(54) Title of the invention : PROCESS FOR CONTINUOUS HYDROGENATION OF AQUEOUS LEVULINIC ACID TO GAMMA-VALEROLACTONE AND ITS TANDEM CONVERSION TO HIGH OCTANE GASOLINE RANGE HYDROCARBONS

(51) International classification	:B01J 21/18, B01J 23/46, B01J 37/28, C07D 315/00
(31) Priority Document No	:2350094-5
(32) Priority Date	:01/02/2023
(33) Name of priority country	:Sweden
(86) International Application No	:PCT/EP2024/052108
Filing Date	:29/01/2024
(87) International Publication No	:WO 2024/160745
(61) Patent of Addition to Application Number	:NA
Filing Date	:NA
(62) Divisional to Application Number	:NA
Filing Date	:NA

(71)**Name of Applicant :**
1)ECO-OIL MILJÖBRÄNSLEN I SVERIGE AB
Address of Applicant :Södra Bergsbyn 116 B 931 91 Skellefteå Sweden
(72)**Name of Inventor :**
1)MIKKOLA, Jyri-Pekka
2)SAMIKANNU, Ajaikumar
3)KONWAR, Lakhya Jyoti
4)SILJEBO, William
5)VAN KLINT, Kent

(57) Abstract :
A Ru-loaded carbon material with characteristic surface chemistry (Brønsted acidic phosphate groups, Lewis basic N-groups selected from the group consisting of Lewis basic pyridinic, pyrrolic and quaternary N-groups and oxygen functional groups) is shown to exhibit excellent activity, selectivity and stability upon hydrogenation of aqueous levulinic acid (0.47 M and 0.95 M) to ?-valerolactone with near stoichiometric H2 under mild conditions (80-95 °C). The material demonstrated remarkable stability in a fixed-bed reactor under continuous flow conditions, maintaining high activity, and ?-valerolactone selectivity during ~1250 h time on stream operating at 3-5 bar, 80-95 °C and low H2/levulinic acid ratio (4-17). The exceptional catalytic performance and stability of the multifunctional Ru-catalyst was attributed to the unique surface chemistry of carbon support that stabilized the Ru nanoparticles on the surface nitrogen and oxygen defects, and promoted 4-hydroxypentanoic acid cyclization over acidic phosphate and RuOx/RuO2 sites.

No. of Pages : 38 No. of Claims : 27

(12) PATENT APPLICATION PUBLICATION
(21) Application No.202517070116 A
(19) INDIA
(22) Date of filing of Application :23/07/2025
(43) Publication Date : 14/11/2025

(54) Title of the invention : ELECTRIC POWER CONVERSION DEVICE

(51) International classification	:H02M 7/48, H02J 3/24, H02J 3/38
(31) Priority Document No	:2023-084604
(32) Priority Date	:23/05/2023
(33) Name of priority country	:Japan
(86) International Application No	:PCT/JP2024/014832
Filing Date	:12/04/2024
(87) International Publication No	:WO 2024/241749
(61) Patent of Addition to Application Number	:NA
Filing Date	:NA
(62) Divisional to Application Number	:NA
Filing Date	:NA

(71)**Name of Applicant :**
1)FUJI ELECTRIC CO., LTD.
Address of Applicant :1-1, Tanabeshinden, Kawasaki-ku, Kawasaki-shi, Kanagawa 2109530 Japan
(72)**Name of Inventor :**
1)HAYASHI, Takashi

(57) Abstract :
An electric power conversion device capable of communicating with a power system and having a virtual synchronous generator function includes: a first output unit (21a) that measures active power (Pout) and reactive power (Qout) at a predetermined position in a system interconnection system, and outputs a difference (P*out) between active power (Pout) at a predetermined position in the power system and a value corresponding to reactive power (Qout) at the predetermined position; and a generation unit (21b) that generates the phase (?) of the output voltage of the power conversion device on the basis of a command value (Pref) of the active power, the difference (P*out), and the virtual synchronous generator function.

No. of Pages : 29 No. of Claims : 10

(12) PATENT APPLICATION PUBLICATION
(21) Application No.202517065998 A
(19) INDIA
(22) Date of filing of Application :10/07/2025
(43) Publication Date : 14/11/2025

(54) Title of the invention : OPHTHALMIC LENS WITH TRANSITION LIGHT SCATTERING CENTERS FOR MYOPIA MANAGEMENT

(51) International classification	:G02C 7/02, G02C 7/10
(31) Priority Document No	:63/436028
(32) Priority Date	:29/12/2022
(33) Name of priority country	:U.S.A.
(86) International Application No	:PCT/US2023/086097
Filing Date	:27/12/2023
(87) International Publication No	:WO 2024/145395
(61) Patent of Addition to Application Number	:NA
Filing Date	:NA
(62) Divisional to Application Number	:NA
Filing Date	:NA

(71)**Name of Applicant :**
1)SIGHTGLASS VISION, INC.
Address of Applicant :13555 North Stemmons Freeway Suite 342 Dallas, Texas 75234 U.S.A.
(72)**Name of Inventor :**
1)HONES, Peter
2)ABOUALIZADEH, Ebrahim

(57) Abstract :
Ophthalmic lenses for reducing progression of myopia are disclosed. The ophthalmic lens includes a lens body having a first curved surface and a second curved, the lens body having a central point; a light diffusion area, the light diffusion area comprising a plurality of scattering centers sized and shaped to scatter incident light, a density of the scattering centers varying over the light diffusion area. The light diffusion area includes a first zone surrounding the central point, the first zone having the highest density of scattering centers of the light diffusion area; and a second zone between the first zone and the central point, the second zone having a density of scattering centers lower than the first zone. The second zone extends to a point on the lens 15 mm or more from the central point in at least one radial direction measured from the central point.

No. of Pages : 24 No. of Claims : 28

(12) PATENT APPLICATION PUBLICATION
(21) Application No.202517068313 A
(19) INDIA
(22) Date of filing of Application :17/07/2025
(43) Publication Date : 14/11/2025

(54) Title of the invention : A JOINT OF FLOOR PANELS

(51) International classification	:E04F 15/02, E04F 15/04, E04F 15/10
(31) Priority Document No	:PL444501
(32) Priority Date	:20/04/2023
(33) Name of priority country	:Poland
(86) International Application No	:PCT/IB2024/053507
Filing Date	:10/04/2024
(87) International Publication No	:WO 2024/218613
(61) Patent of Addition to Application Number	:NA
Filing Date	:NA
(62) Divisional to Application Number	:NA
Filing Date	:NA

(71)**Name of Applicant :**
1)"BARLINEK" SPÓLKA AKCYJNA
Address of Applicant :Al. Solidarnosci 36 25-323 Kielce Poland
(72)**Name of Inventor :**
1)GUTKOWSKI, Pawel
2)KONSTANCZAK, Marek
3)LASAK, Grzegorz

(57) Abstract :
A floor panel (1) has interlocking means (10, 11) formed on the side of its short edges (5, 5') being joined together. These interlocking means (10, 11) comprise joining parts made as a male joining part (9) and a female joining part (12) and have a vertically active concave locking part (13) and a convex locking part (14), as well as slanted guiding surfaces (15, 16). Furthermore, there is a bendable part (7) formed in the lower surface (2a) of the floor panel (1), comprising a plurality of adjacent recesses (8, 8') formed in the lower surface (2a), next to the male joining part (9), which are inclined relative to the short edge (5') of the side surface (6'), allowing the angular deflection of the male joining part (9) to be increased, relative to the horizontal plane, during its interlocking with the female joining part (12) at the short edges (5, 5').

No. of Pages : 14 No. of Claims : 9

(12) PATENT APPLICATION PUBLICATION
(21) Application No.202517070592 A
(19) INDIA
(22) Date of filing of Application :24/07/2025
(43) Publication Date : 14/11/2025

(54) Title of the invention : A PROCESS FOR SIMULTANEOUSLY CONVERTING HYDROGEN HALIDES TO HALOGENS AND CARBON TO HYDROCARBONS

(51) International classification	:C07C 1/00, C07C 11/24, C01F 11/20, C01B 7/00, C10H 15/00
(31) Priority Document No	:63/477309
(32) Priority Date	:27/12/2022
(33) Name of priority country	:U.S.A.
(86) International Application No	:PCT/US2023/085637
Filing Date	:22/12/2023
(87) International Publication No	:WO 2024/145203
(61) Patent of Addition to Application Number	:NA
Filing Date	:NA
(62) Divisional to Application Number	:NA
Filing Date	:NA

(71)**Name of Applicant :**
1)DEHESTANI, Ahmad
Address of Applicant :3054 Burlington Way Walnut Creek, Texas 94598 U.S.A.
2)MCFARLAND, Eric W.
(72)**Name of Inventor :**
1)DEHESTANI, Ahmad
2)MCFARLAND, Eric W.

(57) Abstract :
A process for producing hydrocarbons and halogens includes contacting solid carbon with a reactive metal to produce a metal carbide, reacting the metal carbide with a hydrogen halide to produce a product comprising a hydrocarbon and a metal halide, and converting the metal halide to an elemental metal and an elemental halogen.

No. of Pages : 13 No. of Claims : 22

(12) PATENT APPLICATION PUBLICATION
(21) Application No.202517070648 A
(19) INDIA
(22) Date of filing of Application :24/07/2025
(43) Publication Date : 14/11/2025

(54) Title of the invention : ENZYME BASED COMPOSITIONS AND METHODS FOR REMOVING DENTAL CALCULI

(51) International classification	:A61Q 11/00, A61K 8/66, C12N 9/14, C12N 9/22, C11D 3/386
(31) Priority Document No	:63/478641
(32) Priority Date	:05/01/2023
(33) Name of priority country	:U.S.A.
(86) International Application No	:PCT/US2024/010512
Filing Date	:05/01/2024
(87) International Publication No	:WO 2024/148282
(61) Patent of Addition to Application Number	:NA
Filing Date	:NA
(62) Divisional to Application Number	:NA
Filing Date	:NA

(71)**Name of Applicant :**
1)PONTIS BIOLOGICS, INC.
Address of Applicant :14 Marine Street Huntington, New York 11743 U.S.A.
(72)**Name of Inventor :**
1)MYNARCIK, Dennis C.

(57) Abstract :
Disclosed are compositions and formulations for removing dental calculus which comprise enzymes or other biocatalysts which cleave (i) surface-accessible nucleic acid polymers and (ii) glycoprotein carbohydrate chains at galactose residues. Optionally, one or more proteolytic enzymes are included. The compositions destroy the structural integrity of the calculus, allowing it to be readily removed without requiring special treatment by a trained dental professional. Also disclosed are methods for removing dental calculus using the disclosed compositions and formulations.

No. of Pages : 65 No. of Claims : 25

(12) PATENT APPLICATION PUBLICATION
(21) Application No.202517094383 A
(19) INDIA
(22) Date of filing of Application :01/10/2025
(43) Publication Date : 14/11/2025

(54) Title of the invention : ANTI-INFECTION CATHETER AND MANUFACTIRUNG METHOD

(51) International classification	:A61M 25/00, A61M 27/00, B33Y 80/00, G16H 20/40, G16H 50/50
(31) Priority Document No	:63/451788
(32) Priority Date	:13/03/2023
(33) Name of priority country	:U.S.A.
(86) International Application No	:PCT/US2024/019689
Filing Date	:13/03/2024
(87) International Publication No	:WO 2024/192099
(61) Patent of Addition to Application Number	:NA
Filing Date	:NA
(62) Divisional to Application Number	:NA
Filing Date	:NA

(71)**Name of Applicant :**
1)CALIFORNIA INSTITUTE OF TECHNOLOGY
Address of Applicant :1200 E. California Blvd., M/C 6-32 PASADENA, California 91125 U.S.A.
(72)**Name of Inventor :**
1)ZHOU, Tingtao
2)WAN, Xuan
3)STERNBERG, Paul W.
4)HUANG, Zhengyu
5)DARAIO, Chiara
6)LI, Zongyi
7)PENG, Zhiwei
8)BRADY, John F.
9)ANANDKUMAR, Animashree

(57) Abstract :
Catheter comprising altered geometry of a fluid channel to prevent upstream mobility of bacteria, using angled obstacles on the interior of the channel that among other things creates vortices that restrict the mobility. An optimized geometry can be realized by an artificial intelligence algorithm or similar methods based on performance of various configurations of obstacle parameters.

No. of Pages : 20 No. of Claims : 12

(12) PATENT APPLICATION PUBLICATION
(21) Application No.202517070656 A
(19) INDIA
(22) Date of filing of Application :24/07/2025
(43) Publication Date : 14/11/2025

(54) Title of the invention : ELECTRONIC AUTHENTICATION SYSTEM AND ELECTRONIC AUTHENTICATION METHOD

(51) International classification	:H04L 9/08, H04L 9/32
(31) Priority Document No	:2022-208931
(32) Priority Date	:26/12/2022
(33) Name of priority country	:Japan
(86) International Application No	:PCT/JP2023/025797
Filing Date	:12/07/2023
(87) International Publication No	:WO 2024/142441
(61) Patent of Addition to Application Number	:NA
Filing Date	:NA
(62) Divisional to Application Number	:NA
Filing Date	:NA

(71)**Name of Applicant :**
1)JAPAN COMMUNICATIONS INC.
Address of Applicant :4-1-28, Toranomon, Minato-ku, Tokyo 1050001 Japan
2)DELOITTE TOHMATSU CYBER LLC
3)DELOITTE TOHMATSU FINANCIAL ADVISORY LLC
4)DELOITTE TOHMATSU RISK ADVISORY LLC
(72)**Name of Inventor :**
1)FUKUDA, Naohisa
2)KAMIZONO, Masaki
3)MAEDA, Yoshihiro
4)KONO, Tsuyoshi
5)KUMAGAI, Hiroshi
6)TAKATA, Yuta
7)NOMURA, Kenta
8)HAYATA, Junichiro
9)DEICKMAN, Greg
10)HAYASHI, Masataka

(57) Abstract :
This electronic authentication system comprises: an ID provider which issues a digital ID to a user after confirming the identity of the user; a first authentication authority which issues a first electronic certificate to the user; and a second authentication authority which issues a second electronic certificate to the user, wherein the first authentication authority and the second authentication authority combine the same digital ID issued to the user by the ID provider into the first electronic certificate and the second electronic certificate.

No. of Pages : 68 No. of Claims : 11

(12) PATENT APPLICATION PUBLICATION
(21) Application No.202517094433 A
(19) INDIA
(22) Date of filing of Application :01/10/2025
(43) Publication Date : 14/11/2025

(54) Title of the invention : CHANNEL ALLOCATION FOR WIRELESS POWER TRANSFER

(51) International classification	:H04B 5/79, H02J 50/00
(31) Priority Document No	:18/322884
(32) Priority Date	:24/05/2023
(33) Name of priority country	:U.S.A.
(86) International Application No	:PCT/US2024/026229
Filing Date	:25/04/2024
(87) International Publication No	:WO 2024/242804
(61) Patent of Addition to Application Number	:NA
Filing Date	:NA
(62) Divisional to Application Number	:NA
Filing Date	:NA

(71)**Name of Applicant :**
1)QUALCOMM INCORPORATED
Address of Applicant :ATTN: International IP Administration 5775 Morehouse Drive San Diego, California 92121-1714 U.S.A.
(72)**Name of Inventor :**
1)PATCHAVA, Raviteja
2)GUPTA, Piyush
3)ZHANG, Xiaoxia

(57) Abstract :
Methods, systems, and devices for wireless communications are described. The described techniques provide for a network device to transfer energy to an energy harvesting (EH)-capable device via a multisine waveform. The network device may transmit the multisine waveform according to a multisine waveform configuration that indicates frequency locations for each EH channel of the multisine waveform across a channel bandwidth. In some cases, the network device may determine the multisine waveform configuration according to latency information of the passive IoT device, channel quality measurements for the channel bandwidth, or both. The multisine waveform configuration may indicate a distribution of individual EH channels across the channel bandwidth to improve frequency diversity, may indicate a contiguous grouping of EH channels to improve multisine gain, or a combination thereof.

No. of Pages : 70 No. of Claims : 30

(12) PATENT APPLICATION PUBLICATION
(21) Application No.202517094449 A
(19) INDIA
(22) Date of filing of Application :01/10/2025
(43) Publication Date : 14/11/2025

(54) Title of the invention : MOTION INFORMATION PREDICTOR SELECTION

(51) International classification	:H04N 19/105, H04N 19/139, H04N 19/176, H04N 19/52, H04N 19/513
(31) Priority Document No	:23315124.0
(32) Priority Date	:27/04/2023
(33) Name of priority country	:EPO
(86) International Application No	:PCT/EP2024/060540
Filing Date	:18/04/2024
(87) International Publication No	:WO 2024/223400
(61) Patent of Addition to Application Number	:NA
Filing Date	:NA
(62) Divisional to Application Number	:NA
Filing Date	:NA

(71)**Name of Applicant :**
1)INTERDIGITAL CE PATENT HOLDINGS, SAS
Address of Applicant :3 rue du Colonel Moll 75017 Paris France
(72)**Name of Inventor :**
1)GALPIN, Franck
2)ROBERT, Antoine
3)BORDES, Philippe
4)LE LEANNEC, Fabrice

(57) Abstract :
A method comprising: obtaining an initial list of motion vector predictors candidates for a current block; obtaining bi-prediction candidates from the initial list, each bi-prediction candidate comprising two motion vectors, a first motion vector of the two motion vectors pointing on a first prediction block in a first reference picture and a second motion vector of the two motion vectors pointing on a second prediction block in a second reference picture; calculating a score for bi-prediction candidates of the initial list; and, obtaining a motion vector predictor for the motion information of the current block based on the calculated scores; wherein each score is value representative of a difference between a first template and a second template, the first template comprising samples of the first prediction block and the second template comprising samples of the second prediction block corresponding spatially to the samples of the first template.

No. of Pages : 38 No. of Claims : 30

(12) PATENT APPLICATION PUBLICATION
(21) Application No.202517094469 A
(19) INDIA
(22) Date of filing of Application :01/10/2025
(43) Publication Date : 14/11/2025

(54) Title of the invention : SELECTIVE SEMI-HYDROGENATION OF ALLENE

(51) International classification	:C07C 29/17, C07C 33/02
(31) Priority Document No	:23171272.0
(32) Priority Date	:03/05/2023
(33) Name of priority country	:EPO
(86) International Application No	:PCT/EP2024/062226
Filing Date	:03/05/2024
(87) International Publication No	:WO 2024/227910
(61) Patent of Addition to Application Number	:NA
Filing Date	:NA
(62) Divisional to Application Number	:NA
Filing Date	:NA

(71)**Name of Applicant :**
1)FIRMENICH SA
Address of Applicant :7, Rue de la Bergère 1242 Satigny Switzerland
(72)**Name of Inventor :**
1)SAUDAN, Lionel

(57) Abstract :
The present invention relates to the field of catalytic hydrogenation and, more particularly, to the semi-hydrogenation of an allene into the corresponding alkene in the presence of a heterogenous catalyst.

No. of Pages : 13 No. of Claims : 14

(12) PATENT APPLICATION PUBLICATION
(21) Application No.202517094487 A
(19) INDIA
(22) Date of filing of Application :01/10/2025
(43) Publication Date : 14/11/2025

(54) Title of the invention : FUSE ASSEMBLY HAVING INLINE TRIGGER FOR CONTROLLED FAILURE AND ROPE SYSTEMS CONTAINING THE SAME

(51) International classification	:A62B 35/04, D07B 1/00, B63B 21/20
(31) Priority Document No	:63/497800
(32) Priority Date	:24/04/2023
(33) Name of priority country	:U.S.A.
(86) International Application No	:PCT/IB2024/053951
Filing Date	:23/04/2024
(87) International Publication No	:WO 2024/224284
(61) Patent of Addition to Application Number	:NA
Filing Date	:NA
(62) Divisional to Application Number	:NA
Filing Date	:NA

(71)**Name of Applicant :**
1)SAMSON ROPE TECHNOLOGIES, INC.
Address of Applicant :2090 Thornton Street Ferndale, Washington 98248 U.S.A.
(72)**Name of Inventor :**
1)HEINS, Dustin
2)PLAIA, James R.
3)HISLOP, Chad
4)KOVICH, Anthony
5)HUGHSON, John
6)BOTTERBUSCH, Michael
7)MURTI, Anu
8)HUYNH, Vinh
9)STENVERS, Danielle

(57) Abstract :
A fuse assembly (1) for rope systems. A catch (2) is a rope segment having a certain failure strength. An accompanying trigger component (6) has a predetermined failure point which can be less than the failure strength of the catch, acting as a sacrificial element to reveal the potential risk of rope recoil. In one embodiment, the catch includes connecting ends (4), and the trigger is remote from the catch. In other embodiments the trigger includes the connecting ends and the catch is separate from but works cooperatively with the trigger. Additional hold components (16) can accompany the system, as well as first and second chafe protection layers (14,15).

No. of Pages : 19 No. of Claims : 20

(12) PATENT APPLICATION PUBLICATION
(21) Application No.202517069501 A
(19) INDIA
(22) Date of filing of Application :21/07/2025
(43) Publication Date : 14/11/2025

(54) Title of the invention : ALERTING DEVICE FOR WARNING OF ANOMALIES IN BEHAVIORAL PATTERNS

(51) International classification :G08B 21/04
(31) Priority Document No :PA202270634
(32) Priority Date :20/12/2022
(33) Name of priority country :Denmark
(86) International Application No :PCT/DK2023/050322
Filing Date :20/12/2023
(87) International Publication No :WO 2024/132070
(61) Patent of Addition to Application Number :NA
Filing Date :NA
(62) Divisional to Application Number :NA
Filing Date :NA

(71)**Name of Applicant :**
1)ANYWARE SOLUTIONS APS
Address of Applicant :Asgårdsvej 148 4100 Ringsted Denmark
(72)**Name of Inventor :**
1)BREMILD, Morten

(57) Abstract :
The present invention relates to an alerting device for warning of anomalies in the behavioral patterns of a person, the device comprising. The device comprises one or more ambient sensoring means comprising one or more ambient sound sensoring means, the one or more ambient sensoring means being adapted to continuously monitor real-time data originating from behavioral patterns of a person; one or more pre-defined pattern profiles stored in the device, including one or more pre-defined sound patterns transformed via a Fast Fourier Transform (FFT) algorithm into one or more pre-defined FFT Sound Pattern Profiles; and one or more computing means. The computing means being configured to: continuously transform real-time sound monitored by the one or more ambient sound sensoring means via a Fast Fourier Transform (FFT) algorithm into one or more real-time FFT Sound Pattern Profiles, and preferably correlating with one or more other ambient sensoring means and Sensor Pattern Profiles, thereby allowing a privacy -protecting detection of the ambient sound from the site of operation; continuously perform a pattern recognition, including a continuous comparison of the one or more real-time FFT Sound Pattern Profiles with the one or more pre-defined FFT Sound Pattern Profiles; store one or more event triggers on the device in case of a match between real-time data and the one or more pre-defined pattern profiles, including a match between the one or more real-time FFT Sound Pattern Profiles and the one or more pre-defined FFT Sound Pattern Profiles; and execute an alert based on the one or more stored event triggers if pre-set data sharing permissions allow it, thereby warning of anomalies in the behavioral patterns of a person.

No. of Pages : 18 No. of Claims : 37

(12) PATENT APPLICATION PUBLICATION
(21) Application No.202517094840 A
(19) INDIA
(22) Date of filing of Application :02/10/2025
(43) Publication Date : 14/11/2025

(54) Title of the invention : DEVICE FOR DISPENSING A FLUID PRODUCT

(51) International classification	:B05B 1/34, B05B 11/02, A61D 7/00
(31) Priority Document No	:FR2301968
(32) Priority Date	:02/03/2023
(33) Name of priority country	:France
(86) International Application No	:PCT/FR2024/050261
Filing Date	:01/03/2024
(87) International Publication No	:WO 2024/180304
(61) Patent of Addition to Application Number	:NA
Filing Date	:NA
(62) Divisional to Application Number	:NA
Filing Date	:NA

(71)**Name of Applicant :**
1)APTAR FRANCE SAS
Address of Applicant :Lieudit Le Prieuré 27110 LE NEUBOURG France
(72)**Name of Inventor :**
1)DUPRE, Théo
2)CAZZOLA, Charles
3)MICHAUX, Sébastien

(57) Abstract :
The invention relates to a device for dispensing a fluid product, the device comprising a reservoir (1) suitable for containing at least one dose of fluid product and a dispensing head (2) attached to the reservoir (1), the dispensing head (2) comprising a tube (3) provided with a front portion (4), the tube (3) comprising a spray tip (10) inserted into the front portion (4), the spray tip (10) comprising an insert (11) and a cup (12), the cup (12) being arranged over the insert (11) and comprising an axial opening forming a dispensing opening (5), the insert (11) being provided with a spray profile comprising at least one non-radial groove (16), at least one wall portion (17) extending along each non-radial groove (16) and a central swirl chamber (19) defined radially inside the at least one wall portion (17).

No. of Pages : 11 No. of Claims : 11

(12) PATENT APPLICATION PUBLICATION
(21) Application No.202517094861 A
(19) INDIA
(22) Date of filing of Application :02/10/2025
(43) Publication Date : 14/11/2025

(54) Title of the invention : MINIMIZATION OF DRIVE TEST (MDT) REPORTING FOR NON-TERRESTRIAL NETWORKS (NTNS)

(51) International classification	:H04W 24/10, H04W 84/06
(31) Priority Document No	:18/314725
(32) Priority Date	:09/05/2023
(33) Name of priority country	:U.S.A.
(86) International Application No	:PCT/US2024/020295
Filing Date	:15/03/2024
(87) International Publication No	:WO 2024/232997
(61) Patent of Addition to Application Number	:NA
Filing Date	:NA
(62) Divisional to Application Number	:NA
Filing Date	:NA

(71)**Name of Applicant :**
1)QUALCOMM INCORPORATED
Address of Applicant :ATTN: International IP Administration 5775 Morehouse Drive San Diego, California 92121-1714 U.S.A.
(72)**Name of Inventor :**
1)BANSAL, Hargovind Prasad
2)EDGE, Stephen William

(57) Abstract :
A method of wireless communication by a user equipment (UE) includes receiving a logging measurement message comprising a logged measurement configuration from a network device. The method also includes initiating a minimization of drive test (MDT) session in response to receiving the logging measurement message. The method further includes generating an MDT log based on measurements collected at the UE, the MDT log including non-terrestrial network (NTN) cell information. The method also includes transmitting, to the network device, the MDT log after completing the MDT session. A method of wireless communication by a network device, includes transmitting, to a user equipment (UE), a logging measurement message comprising a logged measurement configuration. The method also includes receiving a minimization of drive test (MDT) log based on measurements collected at the UE and the logged measurement configuration. The MDT log includes non-terrestrial network (NTN) cell information.

No. of Pages : 43 No. of Claims : 30

(12) PATENT APPLICATION PUBLICATION
(21) Application No.202517066930 A
(19) INDIA
(22) Date of filing of Application :14/07/2025
(43) Publication Date : 14/11/2025

(54) Title of the invention : ARTICLES WITH DECORATIVE SURFACE COATINGS

(51) International classification	:B32B 15/01, C22C 19/05, C22C 27/04, C23C 28/02, C23C 30/00
(31) Priority Document No	:63/433363
(32) Priority Date	:16/12/2022
(33) Name of priority country	:U.S.A.
(86) International Application No	:PCT/US2023/084478
Filing Date	:16/12/2023
(87) International Publication No	:WO 2024/130229
(61) Patent of Addition to Application Number	:NA
Filing Date	:NA
(62) Divisional to Application Number	:NA
Filing Date	:NA

(71)**Name of Applicant :**
1)MAXTERIAL, INC.
Address of Applicant :1061 Serpentlne Ln, Ste A Pleasanton, CA 94566 U.S.A.
(72)**Name of Inventor :**
1)HAGHDOOST, Atieh
2)KARGAR, Mehdi
3)ILGAR, Ersan
4)CHURCH, Daniel

(57) Abstract :
Decorative items with surface coatings are described. A surface of the decorative item can include a surface coating. The surface coating can include many different materials and may include a metal or metal alloy such as, for example, a molybdenum alloy. A decorative coating layer comprising chromium or other materials can be present on an alloy layer, e.g., on a molybdenum alloy layer.

No. of Pages : 81 No. of Claims : 24

(12) PATENT APPLICATION PUBLICATION
(21) Application No.202517066932 A
(19) INDIA
(22) Date of filing of Application :14/07/2025
(43) Publication Date : 14/11/2025

(54) Title of the invention : WEAPONS AND WEAPON COMPONENTS INCLUDING SURFACE COATINGS

(51) International classification	:F41A 21/22, C25D 5/12, F41A 21/30
(31) Priority Document No	:63/433362
(32) Priority Date	:16/12/2022
(33) Name of priority country	:U.S.A.
(86) International Application No	:PCT/US2023/084477
Filing Date	:16/12/2023
(87) International Publication No	:WO 2024/130228
(61) Patent of Addition to Application Number	:NA
Filing Date	:NA
(62) Divisional to Application Number	:NA
Filing Date	:NA

(71)**Name of Applicant :**
1)MAXTERIAL, INC.
Address of Applicant :1061 Serpentlne Ln, Ste A Pleasanton, CA 94566 U.S.A.
(72)**Name of Inventor :**
1)HAGHDOOST, Atieh
2)KARGAR, Mehdi
3)ILGAR, Ersan
4)CHURCH, Daniel

(57) Abstract :
Molds and dies with surface coatings are described. A surface of the mold or die that, contacts a material to be processed can include a surface coating. The surface coating ca include many different materials man may include a metal or metal alloy such as, for example, a molybdenum alloy.

No. of Pages : 74 No. of Claims : 24

(12) PATENT APPLICATION PUBLICATION
(21) Application No.202517066993 A
(19) INDIA
(22) Date of filing of Application :14/07/2025
(43) Publication Date : 14/11/2025

(54) Title of the invention : MOLDS AND DIES INCLUDING SURFACE COATINGS

(51) International classification	:B29C 33/56, B29C 33/42, C22C 19/05, C22C 27/04, C25D 3/56
(31) Priority Document No	:63/433289
(32) Priority Date	:16/12/2022
(33) Name of priority country	:U.S.A.
(86) International Application No	:PCT/US2023/084474
Filing Date	:16/12/2023
(87) International Publication No	:WO 2024/130225
(61) Patent of Addition to Application Number	:NA
Filing Date	:NA
(62) Divisional to Application Number	:NA
Filing Date	:NA

(71)**Name of Applicant :**
1)MAXTERIAL, INC.
Address of Applicant :1061 Serpentlne Ln, Ste A Pleasanton, CA 94566 U.S.A.
(72)**Name of Inventor :**
1)HAGHDOOST, Atieh
2)KARGAR, Mehdi
3)ILGAR, Ersan
4)CHURCH, Daniel

(57) Abstract :
Molds and dies with surface coatings are described. A surface of the mold or die that, contacts a material to be processed can include a surface coating. The surface coating can include many different materials and may include a metal or metal alloy such as, for example, a molybdenum alloy or a tungsten alloy coating.

No. of Pages : 74 No. of Claims : 40

(12) PATENT APPLICATION PUBLICATION
(21) Application No.202517068884 A
(19) INDIA
(22) Date of filing of Application :18/07/2025
(43) Publication Date : 14/11/2025

(54) Title of the invention : MINI SYRINGE DRIVER

(51) International classification	:A61M 5/145, A61M 5/315, A61M 5/168
(31) Priority Document No	:22306998.0
(32) Priority Date	:22/12/2022
(33) Name of priority country	:EPO
(86) International Application No	:PCT/EP2023/087554
Filing Date	:22/12/2023
(87) International Publication No	:WO 2024/133865
(61) Patent of Addition to Application Number	:NA
Filing Date	:NA
(62) Divisional to Application Number	:NA
Filing Date	:NA

(71)**Name of Applicant :**
1)SENSORION
Address of Applicant :375 rue du Professeur Joseph Blayac 34080 Montpellier France
(72)**Name of Inventor :**
1)BOUILLET, Adrien
2)CHEDRU, Clémence

(57) Abstract :
The control unit is configured to wait for positive feedback from the detection system for launching the operation of the pushing element.

No. of Pages : 18 No. of Claims : 15

(12) PATENT APPLICATION PUBLICATION
(21) Application No.202517069357 A
(19) INDIA
(22) Date of filing of Application :21/07/2025
(43) Publication Date : 14/11/2025

(54) Title of the invention : SARS-COV-2 SPIKE PROTEIN-BINDING MOLECULES

(51) International classification	:C07K 16/10, A61P 31/14, A61K 39/00
(31) Priority Document No	:10202260528T
(32) Priority Date	:21/12/2022
(33) Name of priority country	:Singapore
(86) International Application No	:PCT/EP2023/087111
Filing Date	:20/12/2023
(87) International Publication No	:WO 2024/133564
(61) Patent of Addition to Application Number	:NA
Filing Date	:NA
(62) Divisional to Application Number	:NA
Filing Date	:NA

(71)**Name of Applicant :**
1)NATIONAL UNIVERSITY OF SINGAPORE
Address of Applicant :21 Lower Kent Ridge Road Singapore 119077 Singapore
(72)**Name of Inventor :**
1)WANG, Linfa
2)CHIA, Wan Ni
3)TAN, Chee Wah
4)ZHU, Feng

(57) Abstract :
: SARS-CoV-2 spike protein-binding molecules are disclosed. Also disclosed are nucleic acids and expression vectors encoding, compositions comprising, and methods using, the SARS-CoV-2 spike protein-binding molecules.

No. of Pages : 122 No. of Claims : 19

(12) PATENT APPLICATION PUBLICATION
(21) Application No.202517069387 A
(19) INDIA
(22) Date of filing of Application :21/07/2025
(43) Publication Date : 14/11/2025

(54) Title of the invention : ANTI-BDCA2 ANTIBODY-DRUG CONJUGATE AND USE THEREOF

(51) International classification	:A61K 47/68, C07K 16/28, A61K 31/58, A61P 37/00
(31) Priority Document No	:202211697892.6
(32) Priority Date	:28/12/2022
(33) Name of priority country	:China
(86) International Application No	:PCT/CN2023/142457
Filing Date	:27/12/2023
(87) International Publication No	:WO 2024/140838
(61) Patent of Addition to Application Number	:NA
Filing Date	:NA
(62) Divisional to Application Number	:NA
Filing Date	:NA

(71)**Name of Applicant :**
1)DUALITY BIOLOGICS (SHANGHAI) CO., LTD.
Address of Applicant :1106, 868 Yinghua Road, Pudong New Area, Shanghai 201204 China
(72)**Name of Inventor :**
1)LI, Xi
2)ZHANG, Yu
3)LI, Bing
4)HUA, Haiqing
5)ZHU, Zhongyuan
6)LI, Jian

(57) Abstract :
An anti-BDCA2 antibody-drug conjugate and the use thereof. The anti-BDCA2 antibody-drug conjugate comprises: an antibody targeting BDCA2 or an antigen-binding fragment thereof, a linker fragment (L), and a glucocorticoid molecule. Also provided are a preparation method for and the use of the antibody-drug conjugate.

No. of Pages : 89 No. of Claims : 35

(12) PATENT APPLICATION PUBLICATION
(21) Application No.202517095130 A
(19) INDIA
(22) Date of filing of Application :03/10/2025
(43) Publication Date : 14/11/2025

(54) Title of the invention : APPARATUS AND METHOD FOR PRODUCTION OF HIGH PURITY COPPER-BASED ALLOYS

(51) International classification	:F27B0014080000, F27B0014040000, F27D0007060000, C22C0009040000, F27D0001160000
(31) Priority Document No	:18/295752
(32) Priority Date	:04/04/2023
(33) Name of priority country	:U.S.A.
(86) International Application No	:18/295752
Filing Date	:04/04/2023
(87) International Publication No	:WO 2024/211454
(61) Patent of Addition to Application Number	:NA
Filing Date	:NA
(62) Divisional to Application Number	:NA
Filing Date	:NA

(71)**Name of Applicant :**
1)DOGGONE INVESTMENT CO. LLC
Address of Applicant :366 East 58th Street Los Angeles, California 90011 U.S.A.
(72)**Name of Inventor :**
1)STRELITZ, Timothy Frederick

(57) Abstract :
In an aspect, a method of manufacturing a high purity copper-based alloy comprises providing in a melting furnace a feedstock and melting the feedstock. The method additionally includes bubbling an inert gas into the molten copper-based alloy to form the high purity copper-based alloy. Aspects are also directed to an apparatus and a method of fabricating an apparatus for manufacturing the high purity copper-based alloy.

No. of Pages : 142 No. of Claims : 20

(12) PATENT APPLICATION PUBLICATION
(21) Application No.202517095133 A
(19) INDIA
(22) Date of filing of Application :03/10/2025
(43) Publication Date : 14/11/2025

(54) Title of the invention : APPARATUS FOR DETERMINING A HYGIENE PROPERTY FOR A SANITARY PRODUCT

(51) International classification :G16C 60/00
(31) Priority Document No :23160847.2
(32) Priority Date :09/03/2023
(33) Name of priority country :EPO
(86) International Application No :PCT/EP2024/056166
Filing Date :08/03/2024
(87) International Publication No :WO 2024/184510
(61) Patent of Addition to Application Number :NA
Filing Date :NA
(62) Divisional to Application Number :NA
Filing Date :NA

(71)**Name of Applicant :**
1)BASF SE
Address of Applicant :Carl-Bosch-Straße 38 67056 Ludwigshafen am Rhein Germany
(72)**Name of Inventor :**
1)DANIEL, Thomas
2)HOELLER, Olaf

(57) Abstract :
The invention refers to a method for determining a hygiene property for a sanitary product. The sanitary product comprises a layer of superabsorbent material. In a step a) one or more absorption properties of a superabsorbent material, and b) a dosing model for the sanitary product comprising the dosing of a predetermined liquid with time at the super-absorbent material layer of the sanitary product are received. A sanitary product property determination model for determining a hygiene property of the sanitary product based on the absorption properties and on the dosing model is utilized. Control data for controlling a production process of the sanitary product and/or the superabsorbent material based on the determined hygiene property of the sanitary product is generated.

No. of Pages : 37 No. of Claims : 15

(12) PATENT APPLICATION PUBLICATION

(21) Application No.202517094866 A

(19) INDIA

(22) Date of filing of Application :02/10/2025

(43) Publication Date : 14/11/2025

(54) Title of the invention : CHANNEL STATE INFORMATION FRAMEWORK FOR FULL-DUPLEX OPERATIONS

(51) International classification	:H04L 5/00, H04L 5/14, H04L 1/00, H04B 17/345
(31) Priority Document No	:63/500923
(32) Priority Date	:09/05/2023
(33) Name of priority country	:U.S.A.
(86) International Application No	:PCT/US2024/024603
Filing Date	:15/04/2024
(87) International Publication No	:WO 2024/233060
(61) Patent of Addition to Application Number	:NA
Filing Date	:NA
(62) Divisional to Application Number	:NA
Filing Date	:NA

(71)**Name of Applicant :**

1)QUALCOMM INCORPORATED

Address of Applicant :Attn: International IP Administration 5775 Morehouse Drive San Diego, California 92121-1714 U.S.A.

(72)**Name of Inventor :**

1)RYU, Jae Ho

2)XIAO, Lei

3)ABDELGHAFFAR, Muhammad Sayed Khairy

4)BECKMAN, James

(57) Abstract :

Various aspects of the present disclosure generally relate to wireless communication. Some aspects relate to a channel state information (CSI) framework for full-duplex operations of a network node. Some aspects more specifically relate to a CSI configuration that includes one or more separate elements for calculating CSI associated with downlink time intervals and for calculating CSI associated with full-duplex time intervals. In some aspects, the CSI configuration may include separate channel measurement resources and/or separate interference measurement resources for calculating CSI associated with downlink time intervals and for calculating CSI associated with full-duplex time intervals. In some aspects, a network node may configure a user equipment with a common CSI reporting configuration or a separate CSI reporting configuration.

No. of Pages : 77 No. of Claims : 30

(12) PATENT APPLICATION PUBLICATION
(21) Application No.202517094912 A
(19) INDIA
(22) Date of filing of Application :02/10/2025
(43) Publication Date : 14/11/2025

(54) Title of the invention : A COMBINED AND PRACTICAL PRODUCT BASED ON TARGETED EXERCISE, NUTRITION AND MEDICATION

(51) International classification	:A61K 31/155, A23L 33/00, A61K 31/7048, A61K 38/28, A61K 45/06
(31) Priority Document No	:NA
(32) Priority Date	:NA
(33) Name of priority country	:NA
(86) International Application No	:PCT/IB2023/060516
Filing Date	:18/10/2023
(87) International Publication No	:WO 2024/157064
(61) Patent of Addition to Application Number	:NA
Filing Date	:NA
(62) Divisional to Application Number	:NA
Filing Date	:NA

(71)**Name of Applicant :**
1)HADIDIANMOGHADDAM, Mostafa
Address of Applicant :No 222 Street 8 Fajr Town Zanjan 4513736575 Iran
(72)**Name of Inventor :**
1)HADIDIANMOGHADDAM, Mostafa

(57) Abstract :
Diabetes, or blood sugar disease, is caused by the resistance of body cells to insulin. The prescribed medicine is prescribed despite the body's resistance to insulin, and this medicine prevents the rise of blood sugar to a large extent, but it does not eliminate insulin resistance, so specialist doctors recommend exercise and proper nutrition to patients when they prescribe the medicine. But this advice is not as precise as medicine and each patient follows it to some extent according to his taste so this advice is not as effective as possible. The imbalance between the three causes diabetes complications, and the more time passes, the more complicated this becomes. In this invention, we control type 1 and 2 diabetes and prevent its complications by strictly implementing the exercise and nutrition program along with the drug therapy administered by the doctor.

No. of Pages : 9 No. of Claims : 11

(12) PATENT APPLICATION PUBLICATION
(21) Application No.202517094923 A
(19) INDIA
(22) Date of filing of Application :03/10/2025
(43) Publication Date : 14/11/2025

(54) Title of the invention : GLAZING WITH IMPROVED ACOUSTIC INSULATION PERFORMANCE

(51) International classification	:E06B 3/66, E06B 3/663, E06B 3/67
(31) Priority Document No	:23166222.2
(32) Priority Date	:31/03/2023
(33) Name of priority country	:EPO
(86) International Application No	:PCT/EP2024/058175
Filing Date	:27/03/2024
(87) International Publication No	:WO 2024/200481
(61) Patent of Addition to Application Number	:NA
Filing Date	:NA
(62) Divisional to Application Number	:NA
Filing Date	:NA

(71)**Name of Applicant :**
1)SAINT-GOBAIN GLASS FRANCE
Address of Applicant :Tour Saint-Gobain 12 Place de l'Iris 92400 Courbevoie France
(72)**Name of Inventor :**
1)ABBAD, Ahmed
2)SCHREIBER, Walter

(57) Abstract :
The present invention relates to a glazing (100) comprising at least two glass walls (101, 102) forming a cavity (103) therebetween, wherein the cavity (103) comprises at least one sound-absorbent device (1) comprising a profile (2) or box formed of a plurality of walls (4, 5, 6), said walls (4, 5, 6) surrounding a chamber (3), said walls (4, 5, 6) comprising an inner wall face (11) facing said chamber (3) and an outer wall face (10) opposite to the inner wall face (11), said walls (4, 5, 6) comprising at least one perforated wall (4) provided with a plurality of periodically arranged wall perforations (7), with each of said wall perforations (7) extending from said inner wall face (11) to said outer wall face (10), said outer wall face (10) of at least one of said walls (4, 5, 6) being provided with a sound-absorbent layer (8) comprising or consisting of a sound-absorbent material, wherein i) the outer wall face (10) of said perforated wall (4) being provided with said sound-absorbent layer (8), said sound-absorbent layer (8) comprising an inner layer face (13) facing said chamber (3) and an outer layer face (12) opposite to the inner layer face (13), said sound absorbent layer (8) being provided with a plurality of layer perforations (9), with each of said layer perforations extending from said inner layer face (13) to said outer layer face (12), said layer perforations (8) being flush with said wall perforations (7), or ii) said walls (4, 5, 6) comprise an inner wall (4) facing the cavity (103) of the glazing (100) and an outer wall (5) opposite thereto, said inner wall (4) and said outer wall (5) being connected by side walls (6), with the outer wall face (10) of exclusively one or each of said side walls (6) being provided with said sound-absorbent layer (8), or iii) said walls (4, 5, 6) comprise an inner wall (4) facing the cavity (103) of the glazing (100) and an outer wall (5) opposite thereto, said perforated wall (4) being said inner wall, the outer wall face (10) of said outer wall (5) being provided with said sound-absorbent layer (8), with said outer wall (5) being provided with a plurality of periodic or non-periodic openings.

No. of Pages : 21 No. of Claims : 15

(12) PATENT APPLICATION PUBLICATION
(21) Application No.202517094503 A
(19) INDIA
(22) Date of filing of Application :01/10/2025
(43) Publication Date : 14/11/2025

(54) Title of the invention : METHOD AND APPARATUS FOR HEAT RECOVERY FROM CRACKED GAS

(51) International classification	:C10G 9/00, C10G 9/20, C10G 9/24, F28D 7/00, F28D 7/02
(31) Priority Document No	:63/498725
(32) Priority Date	:27/04/2023
(33) Name of priority country	:U.S.A.
(86) International Application No	:PCT/US2024/026468
Filing Date	:26/04/2024
(87) International Publication No	:WO 2024/226944
(61) Patent of Addition to Application Number	:NA
Filing Date	:NA
(62) Divisional to Application Number	:NA
Filing Date	:NA

(71)**Name of Applicant :**
1)LUMMUS TECHNOLOGY LLC
Address of Applicant :1515 Broad Street Bloomfield, New Jersey 07003-3096 U.S.A.
(72)**Name of Inventor :**
1)JIBB, Richard John
2)GROPPI, Roberto

(57) Abstract :
A system for recovery of heat from a cracked gas product includes a heat exchanger with one or more coiled tube bundles including a mandrel, tubes wound in concentric layers around the mandrel, and tube sheets. The tubes and tube sheets define one or more tube circuits. A cracked gas product is provided to the heat exchanger and flows on a shell side of the exchanger around an outside of the tubes without a substantial change in direction of the cracked gas product. A feed stream and one or more process streams flow inside the tubes, and more specifically, through separate tube circuits. The feed stream and process streams are heated by indirect heat transfer against the cracked gas product, which enables simultaneous heating of separate fluid streams without a convection section. Related methods for heat recovery are also disclosed.

No. of Pages : 34 No. of Claims : 29

(12) PATENT APPLICATION PUBLICATION
(21) Application No.202517094540 A
(19) INDIA
(22) Date of filing of Application :01/10/2025
(43) Publication Date : 14/11/2025

(54) Title of the invention : POSITIVE ELECTRODE ACTIVE MATERIAL, AND POSITIVE ELECTRODE AND LITHIUM SECONDARY BATTERY COMPRISING SAME

(51) International classification	:H01M 4/505, H01M 4/525, C01G 53/00, H01M 10/0525, H01M 4/02
(31) Priority Document No	:10-2023-0050981
(32) Priority Date	:18/04/2023
(33) Name of priority country	:Republic of Korea
(86) International Application No	:PCT/KR2024/005202
Filing Date	:18/04/2024
(87) International Publication No	:WO 2024/219841
(61) Patent of Addition to Application Number	:NA
Filing Date	:NA
(62) Divisional to Application Number	:NA
Filing Date	:NA

(71)**Name of Applicant :**
1)LG ENERGY SOLUTION, LTD.
Address of Applicant :Tower 1, 108, Yeoui-daero, Yeongdeungpo-gu, Seoul 07335 Republic of Korea
(72)**Name of Inventor :**
1)HAN, Gi Beom
2)PARK, Kang Joon
3)LEE, Youshin
4)LEE, Jaeyoung
5)PARK, Byungchun
6)PARK, Sin Young

(57) Abstract :
The present invention relates to a positive electrode active material comprising an overlithiated manganese oxide represented by chemical formula 1, with a sulfur content of 4,000 ppm or more on the basis of the total weight of the positive electrode active material as measured at the surface, a method for manufacturing same, and a positive electrode and lithium secondary battery, each containing same.

No. of Pages : 25 No. of Claims : 11

(12) PATENT APPLICATION PUBLICATION
(21) Application No.202517094574 A
(19) INDIA
(22) Date of filing of Application :01/10/2025
(43) Publication Date : 14/11/2025

(54) Title of the invention : SYSTEMS AND METHODS FOR SEED TRAIN OPTIMIZATION

(51) International classification	:C12M 3/00, C12M 1/36, G16B 5/00
(31) Priority Document No	:63/489958
(32) Priority Date	:13/03/2023
(33) Name of priority country	:U.S.A.
(86) International Application No	:PCT/US2024/019521
Filing Date	:12/03/2024
(87) International Publication No	:WO 2024/191993
(61) Patent of Addition to Application Number	:NA
Filing Date	:NA
(62) Divisional to Application Number	:NA
Filing Date	:NA

(71)**Name of Applicant :**
1)AMGEN INC.
Address of Applicant :One Amgen Center Drive Thousand Oaks, CA 91320 U.S.A.
(72)**Name of Inventor :**
1)LI, Yi
2)CHEN, Chun

(57) Abstract :
Techniques for determining parameters for a seed train process for growing a culture of cells. The techniques include obtaining a specification of seed train process constraints for multiple stages of the seed train process; determining the seed train process parameters using the seed train process constraints, the seed train process parameters comprising a respective set of parameters for each particular stage of multiple stages of the seed train process; determining, using historical cell growth data and the seed train process parameters, a likelihood indicative of whether performing the seed train process using the seed train process parameters will satisfy seed train process success criteria; and outputting the set of seed train process parameters for each stage of the multiple stages of the seed train process and the likelihood indicative of whether performing the seed train process will satisfy the seed train process success criteria.

No. of Pages : 57 No. of Claims : 25

(12) PATENT APPLICATION PUBLICATION
(21) Application No.202517094608 A
(19) INDIA
(22) Date of filing of Application :01/10/2025
(43) Publication Date : 14/11/2025

(54) Title of the invention : DEVELOPMENT OF CELL MEDIUM AND FEED ON MAMMALIAN CELLS

(51) International classification	:C12Q 1/6876, C12N 5/00, C12P 21/00
(31) Priority Document No	:23159542.2
(32) Priority Date	:02/03/2023
(33) Name of priority country	:EPO
(86) International Application No	:PCT/EP2024/054934
Filing Date	:27/02/2024
(87) International Publication No	:WO 2024/180052
(61) Patent of Addition to Application Number	:NA
Filing Date	:NA
(62) Divisional to Application Number	:NA
Filing Date	:NA

(71)**Name of Applicant :**
1)EVONIK OPERATIONS GMBH
Address of Applicant :Rellinghauser Strasse 1-11 45128 Essen Germany
(72)**Name of Inventor :**
1)ROY, Suki
2)NAGARAJAN, Sanjanaa
3)BÖHL, Florian
4)HUANG, Lingzhi
5)WHELAN, Rose
6)WONG, Kit Yeng

(57) Abstract :
The present invention is related to a DNA array-based method of assessing the effect of at least one test component of cell medium on at least one phenotype of interest of a test mammalian cell line cultured in cell media comprising the test component, the method comprising the steps of: (a) determining a test methylation profile of one or more pre-selected methylation sites within the DNA of the test cell line; (b) comparing the test methylation profile obtained from (a) with at least one control methylation profile from the same strain of mammalian cell line cultured in cell media without the test component; and wherein a significant similarity in the test methylation profile of (a) compared to the control methylation profile, is indicative of the test cell having the phenotype of interest and the test component not having an effect on the phenotype of interest; and wherein a significant difference in the test methylation profile of (a) compared to the control methylation profile, is indicative of the test cell having the phenotype of interest and the test component having an effect on the phenotype of interest and wherein the method comprises a further step of: (c) comparing the test methylation profile obtained from (a) with (i) at least one first reference methylation profile obtained from a first mammalian reference cell line that displays at least one phenotype of interest; and/or (ii) at least one second reference methylation profile obtained from a second mammalian reference cell line that does not display the phenotype of interest; and wherein the reference cell lines are not in contact with the test component; and wherein a significant similarity in the test methylation profile of (a) compared to the first or second reference methylation profile, is indicative of the test cell having the phenotype of interest or not having the phenotype of interest respectively; and wherein a difference in the test methylation profile of (a) compared to the first or second reference methylation profile, is indicative of the test cell not having the phenotype of interest or having the phenotype of interest.

No. of Pages : 31 No. of Claims : 13

(12) PATENT APPLICATION PUBLICATION
(21) Application No.202517095591 A
(19) INDIA
(22) Date of filing of Application :05/10/2025
(43) Publication Date : 14/11/2025

(54) Title of the invention : CONTROL METHOD FOR ELECTRIC MOTORS IN SERIES CONNECTION

(51) International classification	:H02P 5/46, H02P 21/18, H02P 21/20
(31) Priority Document No	:202311042386.8
(32) Priority Date	:16/08/2023
(33) Name of priority country	:China
(86) International Application No	:PCT/CN2024/089796
Filing Date	:25/04/2024
(87) International Publication No	:WO 2025/035832
(61) Patent of Addition to Application Number	:NA
Filing Date	:NA
(62) Divisional to Application Number	:NA
Filing Date	:NA

(71)**Name of Applicant :**
1)ZHE JIANG SIEKON TRANSMISSION TECHNOLOGY CO., LTD
Address of Applicant :No. 176, Gaoxin East Road, Tongxiang Economic Development Zone, Tongxiang City Jiaxing, Zhejiang 314500 China
(72)**Name of Inventor :**
1)YU, Wenyong
2)WANG, Changjiang
3)JIN, Jianhua
4)YANG, Chao
5)HUANG, Fengli

(57) Abstract :
The present invention relates to the technical field of electric motor control. Disclosed is a control method for electric motors in series connection, which control method solves the problems of rotation speed synchronization, energy consumption and fault protection of electric motors with axes in series connection. The control method comprises: connecting axes of n electric motors in series, and collecting basic parameters of each electric motor; obtaining a voltage space vector reference value by means of synthesis; acquiring a desired voltage output vector; implementing rotation speed synchronization and load balancing of the electric motors with axes in series connection; and monitoring, in real time, operating processes of the electric motors with axes in series connection, and resolving a fault. In the present invention, the desired voltage output vector is retained by means of a hybrid control algorithm, the rotation speed synchronization of the electric motors with axes in series connection is implemented by means of a counter closed-loop rotation speed algorithm, the load and energy consumption of the electric motors with axes in series connection are kept balanced by means of an energy consumption balancing algorithm, and a fault resolution processing scheme is selected in a combined manner by means of a rights-and-interests selection algorithm, thus greatly improving the collaboration capability of the electric motors, improving the fault detection and response capabilities, and reducing the resource consumption costs.

No. of Pages : 24 No. of Claims : 8

(12) PATENT APPLICATION PUBLICATION
(21) Application No.202517095596 A
(19) INDIA
(22) Date of filing of Application :05/10/2025
(43) Publication Date : 14/11/2025

(54) Title of the invention : ULTRA-DEEP INDUCTION HARDENING FOR TRACK PADS

(51) International classification	:C21D 1/18, B62D 55/26, B62D 55/21, C21D 9/00
(31) Priority Document No	:18/119885
(32) Priority Date	:10/03/2023
(33) Name of priority country	:U.S.A.
(86) International Application No	:PCT/US2024/016594
Filing Date	:21/02/2024
(87) International Publication No	:WO 2024/191560
(61) Patent of Addition to Application Number	:NA
Filing Date	:NA
(62) Divisional to Application Number	:NA
Filing Date	:NA

(71)**Name of Applicant :**
1)CATERPILLAR INC.
Address of Applicant :100 NE Adams Street Peoria, Illinois 61629-6450 U.S.A.
(72)**Name of Inventor :**
1)MAGNER, Scott Howard
2)DUMITRU, Mircea
3)LOEFFLER, Brian Konrad
4)MANIRUZZAMAN, Mohammed
5)LI, Yongqiang
6)JIANG, Simon

(57) Abstract :
Disclosed herein is an example track pad (112) having a ground-contacting portion (202) for use in a track-based machine (100) to propel and support the machine (100) across a supporting surface. The track pad (112) may be a track pad (112) that forms a link of a chain forming the track (102) for the track-based machine (100). The track pad (112) includes a cast body (114) formed of a first alloy steel having a first strength and toughness. The track pad (112) includes a roll path (116) that contacts a roller (502) of the track-based machine (100). The roll path (116) is hardened through an induction hardening process to achieve a hardness level at a depth of 32 millimeters or more from the surface of the roll path (116). The roll path (116) is shaped and positioned to contact rollers (110) of the track drive assembly and thereby reduce wear and fatigue on the track pad (112) as a result of contact and force transferred through the roller (502).

No. of Pages : 22 No. of Claims : 10

(12) PATENT APPLICATION PUBLICATION
(21) Application No.202517095597 A
(19) INDIA
(22) Date of filing of Application :05/10/2025
(43) Publication Date : 14/11/2025

(54) Title of the invention : REVOLVING FLAT CARD

(51) International classification	:D01G 15/28, D01G 31/00
(31) Priority Document No	:CH000269/2023
(32) Priority Date	:10/03/2023
(33) Name of priority country	:Switzerland
(86) International Application No	:PCT/EP2024/055275
Filing Date	:29/02/2024
(87) International Publication No	:WO 2024/188654
(61) Patent of Addition to Application Number	:NA
Filing Date	:NA
(62) Divisional to Application Number	:NA
Filing Date	:NA

(71)**Name of Applicant :**
1)RIETER AG
Address of Applicant :Klosterstrasse 20 8406 Winterthur Switzerland
(72)**Name of Inventor :**
1)ANDEREGG, Peter

(57) Abstract :
The invention relates to a method for operating a revolving flat card (1) and to a revolving flat card (1). The revolving flat card (1) has a controller (2) comprising an input module (3), a feed (6) and a cylinder (8) fitted with a cylinder clothing (9). A carding gap width (12) is formed between an outer surface (10) of the cylinder clothing (9) and a flat clothing (15). The revolving flat card (1) also has a carding gap width measurement arrangement (33) and an actuator (31) for adjusting the carding gap width (21) and a drive (42) for controlling a rotation speed of the cylinder (8). The input module (3) measures a process temperature, detects a target process temperature together with an associated maximum process temperature and detects a control range and a maximum value for the carding gap width (21), The controller (2) controls the target process temperature by adjusting the carding gap width (21) and/or the feed (6) and/or a rotation speed of the cylinder (8).

No. of Pages : 19 No. of Claims : 15

(12) PATENT APPLICATION PUBLICATION
(21) Application No.202517094944 A
(19) INDIA
(22) Date of filing of Application :03/10/2025
(43) Publication Date : 14/11/2025

(54) Title of the invention : PROCESS FOR REDUCING FOULING IN HIGH PRESSURE POLYMERIZATION

(51) International classification :B01J 19/00
(31) Priority Document No :23161580.8
(32) Priority Date :13/03/2023
(33) Name of priority country :EPO
(86) International Application No :PCT/EP2024/056663
Filing Date :13/03/2024
(87) International Publication No :WO 2024/189074
(61) Patent of Addition to Application Number :NA
Filing Date :NA
(62) Divisional to Application Number :NA
Filing Date :NA

(71)**Name of Applicant :**
1)BOREALIS GMBH
Address of Applicant :Trabrennstrasse 6-8 1020 Vienna Austria
(72)**Name of Inventor :**
1)VOIGT, Björn
2)ERIKSSON, Björn
3)PETTERSSON, Lars
4)YALALOV, Denis
5)CARLSSON, Nils
6)LARSSON, Pernilla
7)NIELSEN, Sten
8)HERMANSSON, Simon

(57) Abstract :
The present invention relates to a process for the reduction of reactor fouling in a high pressure polymerization reactor comprising a siloxane-bonded polymer layer adhered to at least one reactor wall, wherein the process comprises contacting the siloxane-bonded polymer layer with an alcohol in an amount of not more than 2 wt.-%, based on the total amount of the reactor feed, wherein the alcohol is in supercritical state. The alcohol may be selected from the group consisting of methanol, ethanol, n-propanol, iso-propanol, n-butanol, and iso-butanol, or a combination thereof. The siloxane-bonded polymer layer may comprise an ethylene copolymer. The above process improves heat transfer at the reactor walls by reducing or removing said siloxane-bonded polymer layer and reducing fouling phenomena. This in turn improves product output, process control, product quality and reproducibility of the obtained polymers, and decreases down-time of the reactor.

No. of Pages : 11 No. of Claims : 12

(12) PATENT APPLICATION PUBLICATION
(21) Application No.202517094957 A
(19) INDIA
(22) Date of filing of Application :03/10/2025
(43) Publication Date : 14/11/2025

(54) Title of the invention : TWO-PHASE STAINLESS STEEL MATERIAL AND TWO-PHASE STAINLESS STEEL WELDED JOINT

(51) International classification	:C22C 38/00, C22C 38/58, C21D 8/10
(31) Priority Document No	:2023-037143
(32) Priority Date	:10/03/2023
(33) Name of priority country	:Japan
(86) International Application No	:PCT/JP2024/009163
Filing Date	:08/03/2024
(87) International Publication No	:WO 2024/190694
(61) Patent of Addition to Application Number	:NA
Filing Date	:NA
(62) Divisional to Application Number	:NA
Filing Date	:NA

(71)**Name of Applicant :**
1)NIPPON STEEL CORPORATION
Address of Applicant :6-1, Marunouchi 2-chome, Chiyoda-ku, Tokyo 1008071 Japan
(72)**Name of Inventor :**
1)OSUKI, Takahiro
2)YAMADA, Kenta
3)IZAWA, Takahiro
4)AOTA, Shohgo

(57) Abstract :
Provided is a two-phase stainless steel material in which the strength of a weld metal produced by non-filler welding using a shielding gas that does not contain nitrogen is comparable to or greater than that of a base material portion. A two-phase stainless steel material according to the present disclosure contains, in mass%, 0.001-0.030% of C, 1.00% or less of Si, 0.05-5.00% of Mn, 0.035% or less of P, 0.0008% or less of S, 21.00-28.00% of Cr, 4.00-9.50% of Ni, 0.80-5.50% of Mo, 0.01-3.50% of Cu, 0.001-0.050% of Al, 0.400% or less of N, 0.0001-0.0050% of B, 0.0050% or less of Mg, 0.0005-0.0100% of Ca, 0.002-0.100% of Ti, and 0.05-2.00% of Co, and satisfies formula (1) and formula (2). (1): Ca/S=2.00 (2): (1000×Ti+2×N)×Co0.2×(0.5×Ca/S)1.6=50.00

No. of Pages : 44 No. of Claims : 3

(12) PATENT APPLICATION PUBLICATION
(21) Application No.202517094968 A
(19) INDIA
(22) Date of filing of Application :03/10/2025
(43) Publication Date : 14/11/2025

(54) Title of the invention : SIDELINK TRANSMISSION METHOD AND TERMINAL DEVICE

(51) International classification :H04W 72/04
(31) Priority Document No :NA
(32) Priority Date :NA
(33) Name of priority country :NA
(86) International Application No :PCT/CN2023/080615
Filing Date :09/03/2023
(87) International Publication No :WO 2024/183077
(61) Patent of Addition to Application Number :NA
Filing Date :NA
(62) Divisional to Application Number :NA
Filing Date :NA

(71)**Name of Applicant :**
1)GUANGDONG OPPO MOBILE TELECOMMUNICATIONS CORP. , LTD.
Address of Applicant :No. 18, Haibin Road, Wusha, Chang'an Dongguan, Guangdong 523860 China
(72)**Name of Inventor :**
1)ZHAO, Zhenshan
2)DING, Yi
3)WU, Zuomin

(57) Abstract :
Provided are a sidelink transmission method and a terminal device. The method comprises: a first terminal device conducting sidelink sending or sidelink receiving in a first time unit, wherein the first time unit comprises M consecutive time slots, and M is a positive integer greater than 1. According to the embodiments of the present application, sidelink sending or sidelink receiving is conducted on the basis of a time unit, and one time unit comprises a plurality of time slots, such that the transmission efficiency of sidelink data can be improved.

No. of Pages : 127 No. of Claims : 16

(12) PATENT APPLICATION PUBLICATION
(21) Application No.202517094985 A
(19) INDIA
(22) Date of filing of Application :03/10/2025
(43) Publication Date : 14/11/2025

(54) Title of the invention : HBV ANTIGEN FORMULATION FOR TREATING HEPATITIS B

(51) International classification	:A61K 39/29, A61P 31/20
(31) Priority Document No	:23162520.3
(32) Priority Date	:17/03/2023
(33) Name of priority country	:EPO
(86) International Application No	:PCT/EP2024/053631
Filing Date	:13/02/2024
(87) International Publication No	:WO 2024/193905
(61) Patent of Addition to Application Number	:NA
Filing Date	:NA
(62) Divisional to Application Number	:NA
Filing Date	:NA

(71)**Name of Applicant :**
1)HELMHOLTZ ZENTRUM MÜNCHEN - DEUTSCHES FORSCHUNGSZENTRUM FÜR GESUNDHEIT UND UMWELT (GMBH)
Address of Applicant :Ingolstädter Landstraße 1 85764 Neuherberg Germany
2)TECHNISCHE UNIVERSITÄT MÜNCHEN, IN VERTRETUNG DES FREISTAATES BAYERN
3)UNIVERSITÄTSKLINIKUM HAMBURG-EPPENDORF
4)ALBERT-LUDWIGS-UNIVERSITÄT FREIBURG
(72)**Name of Inventor :**
1)PROTZER, Ulrike
2)AMBIKE, Shubhankar
3)KOSINSKA, Anna Dagmara
4)THIELE, Frank
5)WIEGAND, Marian
6)KNOLLE, Percy
7)ADDO, Marylyn Martina
8)NASSAL, Michael

(57) Abstract :
The disclosure provides methods and compositions for treating HBV. Disclosed is an HBcAg particle, comprising HBV core proteins from at least two different HBV genotypes, and a vaccine vector comprising a nucleotide sequence having =90% sequence identity to SEQ ID NO: 5. Disclosed are respective pharmaceutical compositions and their uses in therapy, for medicament manufacture and a vaccination method. Said vaccination method comprises administering to a human (i) a first dose and (ii) a second dose of an HBcAg particle and of an HBsAg, and (iii) a dose of a vaccine vector that expresses a HBsAg from HBV genotype A, a HBcAg from HBV genotype D, a HBsAg having =90% sequence identity to SEQ ID NO: 7, a HBcAg having =90% sequence identity to SEQ ID NO: 8 or 17, and an RT domain having =90% sequence identity to SEQ ID NO: 9.

No. of Pages : 112 No. of Claims : 28

(12) PATENT APPLICATION PUBLICATION
(21) Application No.202517094986 A
(19) INDIA
(22) Date of filing of Application :03/10/2025
(43) Publication Date : 14/11/2025

(54) Title of the invention : SAMPLE SWABS AND METHOD OF PRODUCTION

(51) International classification	:G01N 1/02, G01N 1/28
(31) Priority Document No	:2304041.3
(32) Priority Date	:20/03/2023
(33) Name of priority country	:U.K.
(86) International Application No	:PCT/GB2024/050739
Filing Date	:19/03/2024
(87) International Publication No	:WO 2024/194624
(61) Patent of Addition to Application Number	:NA
Filing Date	:NA
(62) Divisional to Application Number	:NA
Filing Date	:NA

(71)**Name of Applicant :**
1)SMITHS DETECTION-WATFORD LIMITED
Address of Applicant :Century House Maylands Avenue Hemel Hempstead Hertfordshire HP2 7DE U.K.
(72)**Name of Inventor :**
1)BEADLE, Alastair

(57) Abstract :
Sample swabs and methods for producing sample swabs for collecting samples for delivery to a detector are provided. A method of producing a sample swab for collecting samples for delivery to a detector comprises providing a swab substrate in the form of a sheet, and stamping the swab substrate in a press comprising surface projections to form one or more ridges in a sample collection region of the swab substrate, wherein the one or more ridges project from the surface of the sheet by more than 0.1mm and no more than 1.0mm.

No. of Pages : 16 No. of Claims : 27

(12) PATENT APPLICATION PUBLICATION
(21) Application No.202517069872 A
(19) INDIA
(22) Date of filing of Application :22/07/2025
(43) Publication Date : 14/11/2025

(54) Title of the invention : METHOD AND IMPLEMENTING DEVICE FOR GENERATING ELECTRICITY

(51) International classification	:H02N 2/18, H10N 30/30, H04R 17/00
(31) Priority Document No	:20220079
(32) Priority Date	:22/12/2022
(33) Name of priority country	:Finland
(86) International Application No	:PCT/FI2023/050672
Filing Date	:11/12/2023
(87) International Publication No	:WO 2024/134015
(61) Patent of Addition to Application Number	:NA
Filing Date	:NA
(62) Divisional to Application Number	:NA
Filing Date	:NA

(71)**Name of Applicant :**
1)TORNADO LOGISTICS OY
Address of Applicant :Rionkatu 11 A 42 00220 Helsinki Finland
(72)**Name of Inventor :**
1)ZHITNII, Sergey

(57) Abstract :
A method to generate electricity and a device to implement the method for increasing the potential energy of an ecological fluid (2) by increasing the static pressure in a hydraulic accumulator and for converting the increased potential energy into electricity based on an oscillating hydraulic system (I, II; III), which electricity is supplied as electrical energy of the required parameters to the conductor, load, or a corresponding to be loaded. In addition, the invention relates to a device for implementing the method. Essential to the invention the use of parametric resonance in an oscillating hydraulic system (I, II, III) together with piezoelectric transducers in the form of piezo capacitors (3).

No. of Pages : 9 No. of Claims : 3

(12) PATENT APPLICATION PUBLICATION
(21) Application No.202517096057 A
(19) INDIA
(22) Date of filing of Application :06/10/2025
(43) Publication Date : 14/11/2025

(54) Title of the invention : BISPECIFIC AGONISTIC ANTIBODIES TO ACTIVIN A RECEPTOR LIKE TYPE 1 (ALK1)

(51) International classification	:A61P 9/00, C07K 16/28
(31) Priority Document No	:63/458044
(32) Priority Date	:07/04/2023
(33) Name of priority country	:U.S.A.
(86) International Application No	:PCT/US2024/023386
Filing Date	:05/04/2024
(87) International Publication No	:WO 2024/211796
(61) Patent of Addition to Application Number	:NA
Filing Date	:NA
(62) Divisional to Application Number	:NA
Filing Date	:NA

(71)**Name of Applicant :**
1)DIAGONAL THERAPEUTICS INC.
Address of Applicant :300 Technology Square Cambridge, Massachusetts 02139 U.S.A.
(72)**Name of Inventor :**
1)LUGOVSKOY, Alexey Alexandrovich
2)HUS, Jean-Christophe
3)GEDDIE, Melissa

(57) Abstract :
Provided herein are bispecific agonistic antibodies that bind to ALK1, BMPR2, ActRIIA, and/or ActRIIB, and methods of using the same.

No. of Pages : 116 No. of Claims : 85

(12) PATENT APPLICATION PUBLICATION
(21) Application No.202517096058 A
(19) INDIA
(22) Date of filing of Application :06/10/2025
(43) Publication Date : 14/11/2025

(54) Title of the invention : UNAVAILABILITY PERIOD SUPPORT ASSOCIATED WITH CONGESTION

(51) International classification	:H04W 28/02, H04W 60/00
(31) Priority Document No	:63/457504
(32) Priority Date	:06/04/2023
(33) Name of priority country	:U.S.A.
(86) International Application No	:PCT/US2024/022982
Filing Date	:04/04/2024
(87) International Publication No	:WO 2024/211507
(61) Patent of Addition to Application Number	:NA
Filing Date	:NA
(62) Divisional to Application Number	:NA
Filing Date	:NA

(71)**Name of Applicant :**
1)INTERDIGITAL PATENT HOLDINGS, INC.
Address of Applicant :200 Bellevue Parkway Suite 300 Wilmington, DE 19809 U.S.A.
(72)**Name of Inventor :**
1)SETHI, Anuj
2)STARSINIC, Michael
3)AHMAD, Saad
4)OLVERA-HERNANDEZ, Ulises

(57) Abstract :
A device (e.g., a WTRU, network device, such as a device comprising an access and mobility function (AMF)) may perform one or more of the following actions. The device may send a registration request via non-access stratus signaling. The registration request may include a first duration. The device may receive a registration accept message. The registration accept message may indicate whether the device is to inform the network entity when the WTRU is available. The device may determine that an unavailability event has ended. The WTRU may determine whether to inform the network entity that the WTRU is available. The device may send a registration update request, for example, based on a determination that the unavailability event has ended and a determination that the WTRU is to inform the network entity when the WTRU is available. The registration update request may indicate that the WTRU is available.

No. of Pages : 52 No. of Claims : 8

(12) PATENT APPLICATION PUBLICATION
(21) Application No.202517096060 A
(19) INDIA
(22) Date of filing of Application :06/10/2025
(43) Publication Date : 14/11/2025

(54) Title of the invention : RAPID ISOLATION, CULTIVATION METHODS AND UTILITIES OF TRUFFLE FUNGI

(51) International classification	:A01G 18/40, A01G 18/30
(31) Priority Document No	:63/455304
(32) Priority Date	:29/03/2023
(33) Name of priority country	:U.S.A.
(86) International Application No	:PCT/US2024/022240
Filing Date	:29/03/2024
(87) International Publication No	:WO 2024/206828
(61) Patent of Addition to Application Number	:NA
Filing Date	:NA
(62) Divisional to Application Number	:NA
Filing Date	:NA

(71)**Name of Applicant :**
1)BLACK BOAR TRUFFLE, LLC
Address of Applicant :340 Peace Pipe Drive Bozeman, Montana 59715 U.S.A.
(72)**Name of Inventor :**
1)STROBEL, Gary A.
2)GAISFORD, Kelly W.

(57) Abstract :
Methods of farming, domesticating, or cultivating truffle fungi, including isolation and cultivation methods for producing pure truffle fungi, or mini-truffles, typically a Tuber spp. or an Iamai spp. Examples of truffle include Tuber melanosporum, Tuber magnatum, Tuber aestivum, Tuber uncinatum, Tuber borchii, Imaia spp., Tuber macrosporum, Tuber gibbosum, Tuber oregonense, and Tuberlyonii. The isolated pure truffle may then be cultivated on a nutrient substrate, which may be, for example, a fruit, nut, grain, or a portion thereof, resulting in a truffle-flavored food product. Non-limiting examples of such substrates include rye, barley, lentil, wheat, rice, soybeans, pecan, hazelnut, pine nut, English walnut, coffee beans, mustard, cacao, sesame, sunflower, grapes, blackberries, blueberries, cherries, kiwi, mango, raspberries, and huckleberries.

No. of Pages : 44 No. of Claims : 28

(12) PATENT APPLICATION PUBLICATION
(21) Application No.202517096061 A
(19) INDIA
(22) Date of filing of Application :06/10/2025
(43) Publication Date : 14/11/2025

(54) Title of the invention : SUPPORT FOR VPLMN URSP RULES

(51) International classification	:H04W 28/02, H04W 40/34
(31) Priority Document No	:63/457549
(32) Priority Date	:06/04/2023
(33) Name of priority country	:U.S.A.
(86) International Application No	:PCT/US2024/023233
Filing Date	:05/04/2024
(87) International Publication No	:WO 2024/211678
(61) Patent of Addition to Application Number	:NA
Filing Date	:NA
(62) Divisional to Application Number	:NA
Filing Date	:NA

(71)**Name of Applicant :**
1)INTERDIGITAL PATENT HOLDINGS, INC.
Address of Applicant :200 Bellevue Parkway Suite 300 Wilmington, DE 19809 U.S.A.
(72)**Name of Inventor :**
1)WANG, Zhibi
2)STARSINIC, Michael
3)ROY, Michel
4)ABBAS, Taimoor

(57) Abstract :
A PCF determines a WTRU is not configured to support VPLMN route selection policy rules. The PCF receives a first message that comprises service parameters associated with the WTRU. The service parameters may be used to generate VPLMN route selection policy rules which apply if the WTRU is registered in a VPLMN. If the PCF has determined that the WTRU does not support VPLMN route selection policy rules, the PCF sends a second message indicating that the VPLMN route selection policy rules will be sent to the WTRU if the WTRU becomes registered in the VPLMN. The PCF receives a third message from a network function. If the third message indicates the WTRU is registered in the VPLMN, the PCF sends a fourth message to the WTRU. The fourth message comprises generated VPLMN route selection policy rules for use by the WTRU in the VPLMN.

No. of Pages : 32 No. of Claims : 15

(12) PATENT APPLICATION PUBLICATION
(21) Application No.202517095134 A
(19) INDIA
(22) Date of filing of Application :03/10/2025
(43) Publication Date : 14/11/2025

(54) Title of the invention : MEASUREMENT AND REPORTING OF METRICS FOR PERFORMANCE MONITORING

(51) International classification	:H04B 7/06, G06N 3/0455, G06N 3/08, H04L 1/00, H04L 25/02	(71)**Name of Applicant :** **1)INTERDIGITAL PATENT HOLDINGS, INC.** Address of Applicant :200 Bellevue Parkway Suite 300 Wilmington, DE 19809 U.S.A.
(31) Priority Document No	:63/456758	(72)**Name of Inventor :**
(32) Priority Date	:03/04/2023	**1)MALHOTRA, Akshay**
(33) Name of priority country	:U.S.A.	**2)TOOHER, J., Patrick**
(86) International Application No	:PCT/US2024/022679	**3)NARAYANAN THANGARAJ, Yugeswar, Deenoo**
Filing Date	:02/04/2024	**4)BELURI, Mihaela**
(87) International Publication No	:WO 2024/211315	**5)IBRAHIM, Mohamed, Salah**
(61) Patent of Addition to Application Number	:NA	**6)TAN, Ahmet, Serdar**
Filing Date	:NA	**7)YATRIBI, Anouar**
(62) Divisional to Application Number	:NA	**8)LEE, Moon-il**
Filing Date	:NA	

(57) Abstract :
Systems, methods, and instrumentalities are disclosed herein for measuring and reporting metrics for performance monitoring. A device may receive configuration information that indicates an input data type, a set of reference vectors, and a distance metric type. The device may receive a channel state information (CSI) reference signal (CSI-RS). The device may determine measured CSI based on a measurement associated with the CSI-RS. The device may generate compressed CSI based on the measured CSI and the input data type. The device may calculate, based on the distance metric type, a distance metric associated with the measured CSI and a reference vector in the set of reference vectors. The device may send a report to a network node. The report may indicate the compressed CSI and the distance metric associated with the measured CSI and the reference vector in the set of reference vectors.

No. of Pages : 49 No. of Claims : 16

(12) PATENT APPLICATION PUBLICATION
(21) Application No.202517095136 A
(19) INDIA
(22) Date of filing of Application :03/10/2025
(43) Publication Date : 14/11/2025

(54) Title of the invention : OPERATING METHOD FOR A METALLURGICAL PLANT IN IRON OR STEEL PRODUCTION

(51) International classification	:C21B 5/00, F27D 17/00, F27D 19/00, C21C 5/52, C21C 5/30
(31) Priority Document No	:23169730.1
(32) Priority Date	:25/04/2023
(33) Name of priority country	:EPO
(86) International Application No	:PCT/EP2024/061261
Filing Date	:24/04/2024
(87) International Publication No	:WO 2024/223670
(61) Patent of Addition to Application Number	:NA
Filing Date	:NA
(62) Divisional to Application Number	:NA
Filing Date	:NA

(71)**Name of Applicant :**
1)PRIMETALS TECHNOLOGIES AUSTRIA GMBH
Address of Applicant :Turmstrasse 44 4031 Linz Austria
(72)**Name of Inventor :**
1)TAUBER, Christian
2)FRITSCHEK, Harald
3)KRAHWINKLER, Petra
4)SCHALER, Martin

(57) Abstract :
During the operation of a metallurgical plant (1, 9, 10) in iron or steel production, a gas (2) containing solid particles (4) is produced. Samples of the gas (2) are repeatedly taken. By means of analysis of the samples taken, at least one analysis value (n) of the gas (2) is determined in each case. Based on the determination of the analysis value (n), at least one process parameter (P) of the metallurgical plant (1, 9, 10) is updated. The objective is for the at least one analysis value (n) of the gas (2) to come closer to a target value (n*). The at least one analysis value (n) is a quantity of solid particles (4) based on a predetermined amount of the gas (2).

No. of Pages : 21 No. of Claims : 13

(12) PATENT APPLICATION PUBLICATION
(21) Application No.202517095147 A
(19) INDIA
(22) Date of filing of Application :03/10/2025
(43) Publication Date : 14/11/2025

(54) Title of the invention : FABRIC AND FABRIC PRODUCTION METHOD

(51) International classification	:B32B 27/12, B32B 5/02, D06C 23/04
(31) Priority Document No	:2023-106011
(32) Priority Date	:28/06/2023
(33) Name of priority country	:Japan
(86) International Application No	:PCT/JP2023/032855
Filing Date	:08/09/2023
(87) International Publication No	:WO 2025/004392
(61) Patent of Addition to Application Number	:NA
Filing Date	:NA
(62) Divisional to Application Number	:NA
Filing Date	:NA

(71)**Name of Applicant :**
1)SANYO TRADING CO., LTD.
Address of Applicant :2-11, Kanda Nishiki-cho, Chiyoda-ku, Tokyo 1010054 Japan
2)MORITSUNE CO., LTD.
(72)**Name of Inventor :**
1)MORI Tsunehide
2)AOKI Takashi
3)HIGASHI Hirokazu
4)NAKAMURA Hiroyuki

(57) Abstract :
Provided is woven or knitted fabric that has a pattern expressed through embossing, and that comprises: a fabric layer; and a resin film layer laminated on the fabric layer. The fabric layer and the resin film layer may be embossed. In the fabric, the melting point of the resin film layer may be lower than the melting point of the fabric layer. Also provided is a fabric production method comprising: a step for preparing a woven or knitted fabric layer; a step for laminating a resin film layer on the fabric layer; and a step for embossing the fabric layer and the resin film layer.

No. of Pages : 21 No. of Claims : 25

(12) PATENT APPLICATION PUBLICATION
(21) Application No.202517095158 A
(19) INDIA
(22) Date of filing of Application :03/10/2025
(43) Publication Date : 14/11/2025

(54) Title of the invention : SELECTION OF A PRU BASED ON CHANNEL CONDITIONS

(51) International classification	:H04L 5/00, H04W 76/14, H04W 24/08, H04W 64/00
(31) Priority Document No	:63/456891
(32) Priority Date	:04/04/2023
(33) Name of priority country	:U.S.A.
(86) International Application No	:PCT/US2024/022737
Filing Date	:03/04/2024
(87) International Publication No	:WO 2024/211342
(61) Patent of Addition to Application Number	:NA
Filing Date	:NA
(62) Divisional to Application Number	:NA
Filing Date	:NA

(71)**Name of Applicant :**
1)INTERDIGITAL PATENT HOLDINGS, INC.
Address of Applicant :200 Bellevue Parkway Suite 300 Wilmington, DE 19809 U.S.A.
(72)**Name of Inventor :**
1)DENG, Tao
2)HASEGAWA, Fumihiro
3)HOANG, Tuong, Duc
4)MARINIER, Paul
5)LEE, Moon-il

(57) Abstract :
A wireless transmit/receive unit (WTRU) configured to: send, to a first positioning reference unit (PRU) and a second PRU, a channel condition measurement request indicating a request for the first PRU to perform first channel condition measurements associated with a first link between the first PRU and an anchor WTRU, and for the second PRU to perform second channel condition measurements associated with a second link between the second PRU and the anchor WTRU; receive the first channel condition measurements from the first PRU and the second channel condition measurements from the second PRU; perform third channel condition measurements associated with a link between the WTRU and the anchor WTRU; select a PRU based on the first, second, and third channel condition measurements; and send a third request to the selected candidate PRU indicating for the selected candidate PRU to join a sidelink positioning group.

No. of Pages : 45 No. of Claims : 16

(12) PATENT APPLICATION PUBLICATION
(21) Application No.202517095159 A
(19) INDIA
(22) Date of filing of Application :03/10/2025
(43) Publication Date : 14/11/2025

(54) Title of the invention : PREPARATION METHOD FOR INTERMEDIATE OF AURISTATIN DERIVATIVE

(51) International classification	:C07D 413/06, C07D 207/08
(31) Priority Document No	:202310518856.7
(32) Priority Date	:06/05/2023
(33) Name of priority country	:China
(86) International Application No	:PCT/CN2024/091109
Filing Date	:06/05/2024
(87) International Publication No	:WO 2024/230625
(61) Patent of Addition to Application Number	:NA
Filing Date	:NA
(62) Divisional to Application Number	:NA
Filing Date	:NA

(71)**Name of Applicant :**
1)REMEGEN CO., LTD.
Address of Applicant :No. 58 Beijing Middle Road, Yantai Development Zone, Yantai District, China (Shandong) Pilot Free Trade Zone Yantai, Shandong 264006 China
(72)**Name of Inventor :**
1)WANG, Lixin
2)GAO, Jinwei
3)ZHONG, Cheng
4)TANG, Haizhou
5)YE, Hui
6)ZHAO, Hongyan
7)ZHU, Marie M.

(57) Abstract :
Provided in the present invention is a process route for preparing an intermediate of an auristatin derivative. Compared with the prior art, said process route effectively avoids using norephedrine in the synthesis path; and in addition, said process route provided in the present invention can produce a target product in one step, effectively avoiding generation of reaction intermediate products, and making a purification method simple and the yield and purity of a final product high. Therefore, the process route is suitable for industrial scale-up production.

No. of Pages : 18 No. of Claims : 12

(12) PATENT APPLICATION PUBLICATION
(21) Application No.202517095720 A
(19) INDIA
(22) Date of filing of Application :06/10/2025
(43) Publication Date : 14/11/2025

(54) Title of the invention : CONTROL DEVICE FOR LIGHT-DISTRIBUTION-ADJUSTABLE LAMP, VEHICLE LAMP, AND SOFTWARE PROGRAM

(51) International classification	:B60Q 1/14, B60Q 1/02, B60Q 1/04, B60Q 1/10, F21S 41/153
(31) Priority Document No	:2023-037427
(32) Priority Date	:10/03/2023
(33) Name of priority country	:Japan
(86) International Application No	:PCT/JP2024/008565
Filing Date	:06/03/2024
(87) International Publication No	:WO 2024/190568
(61) Patent of Addition to Application Number	:NA
Filing Date	:NA
(62) Divisional to Application Number	:NA
Filing Date	:NA

(71)**Name of Applicant :**
1)KOITO MANUFACTURING CO.,LTD.
Address of Applicant :Sumitomo Fudosan Osaki Twin Bldg. East, 5-1-18 Kitashinagawa, Shinagawa-ku Tokyo 1410001 Japan
(72)**Name of Inventor :**
1)NODA Keisuke
2)SAWADA Hirotaka

(57) Abstract :
A control device (300) generates a control image (IMG1) for controlling a light-distribution-adjustable lamp (210). The control device (300) acquires light shielding information (ROI) that indicates a light shielding part, which is a region in which light is to be shielded. Among a plurality of first pixels (PIX1) included in the control image (IMG1), a portion corresponding to the light shielding part has a pixel value of zero. When the control device (300) gradually changes the pixel value of the first pixels (PIX1) in the control image (IMG1) from zero to a target value, the speed (a) of increase of pixel value in a first section (T1) after commencement of gradual change control is lower than the speed (ß) of increase of pixel value in a second section (T2) that follows the first section (T1).

No. of Pages : 97 No. of Claims : 37

(12) PATENT APPLICATION PUBLICATION
(21) Application No.202517095794 A
(19) INDIA
(22) Date of filing of Application :06/10/2025
(43) Publication Date : 14/11/2025

(54) Title of the invention : ELECTRONIC DEVICE COMPRISING DEFORMABLE PRINTED CIRCUIT BOARD

(51) International classification	:H05K 1/14, H05K 1/11, H05K 1/02, H04M 1/02, H05K 3/28
(31) Priority Document No	:10-2023-0050672
(32) Priority Date	:18/04/2023
(33) Name of priority country	:Republic of Korea
(86) International Application No	:PCT/KR2024/002046
Filing Date	:13/02/2024
(87) International Publication No	:WO 2024/219622
(61) Patent of Addition to Application Number	:NA
Filing Date	:NA
(62) Divisional to Application Number	:NA
Filing Date	:NA

(71)**Name of Applicant :**
1)SAMSUNG ELECTRONICS CO., LTD.
Address of Applicant :129, Samsung-ro Yeongtong-gu, Suwon-si Gyeonggi-do 16677 Republic of Korea
(72)**Name of Inventor :**
1)LEE, Youngsun
2)KIM, Byeongkeol
3)RA, Jaeyeon
4)LEE, Seungjoo

(57) Abstract :
An electronic device according to an embodiment comprises: a first housing; a second housing; a hinge structure that movably connects the first housing and the second housing; and a first printed circuit board having at least a portion deformable according to a movement of the second housing with respect to the first housing, wherein the first printed circuit board comprises: a first conductive layer; a second conductive layer arranged on the first conductive layer; at least one conductive via extending from the first conductive layer to the second conductive layer; a radiating layer interposed between the first conductive layer and the second conductive layer and comprising an opening that surrounds the at least one conductive via; and a non-conductive layer having at least a portion arranged in the opening.

No. of Pages : 63 No. of Claims : 15

(12) PATENT APPLICATION PUBLICATION
(21) Application No.202517095801 A
(19) INDIA
(22) Date of filing of Application :06/10/2025
(43) Publication Date : 14/11/2025

(54) Title of the invention : METHOD AND DEVICE FOR MANAGING END-TO-END CONNECTION CONFIGURED THROUGH TERMINAL RELAY IN WIRELESS COMMUNICATION SYSTEM

(51) International classification	:H04W 76/14, H04W 76/22, H04W 88/04, H04W 92/18
(31) Priority Document No	:10-2023-0045536
(32) Priority Date	:06/04/2023
(33) Name of priority country	:Republic of Korea
(86) International Application No	:PCT/KR2024/004398
Filing Date	:04/04/2024
(87) International Publication No	:WO 2024/210552
(61) Patent of Addition to Application Number	:NA
Filing Date	:NA
(62) Divisional to Application Number	:NA
Filing Date	:NA

(71)**Name of Applicant :**
1)SAMSUNG ELECTRONICS CO., LTD.
Address of Applicant :129, Samsung-ro, Yeongtong-gu Suwon-si Gyeonggi-do 16677 Republic of Korea
(72)**Name of Inventor :**
1)KANG, Hyunjeong

(57) Abstract :
The present disclosure relates to a 5G or 6G communication system for supporting higher data transmission rates. This method, performed by a first UE in a wireless communication system, may include the steps of: identifying either the expiration of a timer associated with an end-to-end (E2E) connection for sidelink communication with a second UE through a relay UE, or the failure of an integrity check of an SL SRB for the E2E connection; and deleting an SRAP setting for the E2E connection.

No. of Pages : 48 No. of Claims : 15

(12) PATENT APPLICATION PUBLICATION
(21) Application No.202517095802 A
(19) INDIA
(22) Date of filing of Application :06/10/2025
(43) Publication Date : 14/11/2025

(54) Title of the invention : A COMPUTER-IMPLEMENTED METHOD AND A COMPUTER-READABLE MEDIUM

(51) International classification	:G06F 8/41, G06F 8/51
(31) Priority Document No	:23173406.2
(32) Priority Date	:15/05/2023
(33) Name of priority country	:EPO
(86) International Application No	:PCT/EP2024/062463
Filing Date	:06/05/2024
(87) International Publication No	:WO 2024/235717
(61) Patent of Addition to Application Number	:NA
Filing Date	:NA
(62) Divisional to Application Number	:NA
Filing Date	:NA

(71)**Name of Applicant :**
1)ILNUMERICS GMBH
Address of Applicant :Bessemerstraße 82 12103 Berlin Germany
(72)**Name of Inventor :**
1)KUTSCHBACH, Haymo

(57) Abstract :
A computer-implemented method includes: receiving (I) a user program code (UC) with a sequence of array instructions each configured to receive as input an array data structure (A, B, C, D, E, F, G) capable to store multiple elements of a respective common data type; and generating (II), from the user program code (UC), a segmented program code (TCC) executable on a processing unit (PU, CPU, GPU) comprising several sub-units (core#1-core#4). The segmented program code comprises program segments (S1, S2, S3, S4, S5) each comprising a respective array operation, the array operations corresponding to the array instructions. Each of the program segments being configured to receive, as a respective runtime input, a partially configured runtime instance (A1, B1, C1) of a respective array data structure, and to use information from the respective partially configured runtime instance, to partially configure a runtime instance (B1, C1, C2) of an array data structure (B, C) as runtime output of the respective program segment, and at least partially configure a respective executable code (KC) comprising the respective array operation. The executable code being configured to update a configuration of the runtime instance partially configured as runtime output of the respective program segment. The method further includes starting (III) executing the segmented program code on a first sub-unit (core#1) of the processing unit, and, when a configuration of the runtime instance, which was received as respective runtime input, is complete and/or updated, completing (IV) configuration of the respective executable code, when the respective executable code is only partially configured, and executing (V) the respective executable code on the processing unit.

No. of Pages : 48 No. of Claims : 23

(12) PATENT APPLICATION PUBLICATION
(21) Application No.202517094992 A
(19) INDIA
(22) Date of filing of Application :03/10/2025
(43) Publication Date : 14/11/2025

(54) Title of the invention : BATCH PROCESS FOR PREPARING A POLYETHER ALCOHOL USING A DOUBLE METAL CYANIDE CATALYST

(51) International classification	:C08G 65/26, C08G 18/48, C08J 9/04
(31) Priority Document No	:202341015356
(32) Priority Date	:07/03/2023
(33) Name of priority country	:India
(86) International Application No	:PCT/EP2024/054907
Filing Date	:27/02/2024
(87) International Publication No	:WO 2024/184124
(61) Patent of Addition to Application Number	:NA
Filing Date	:NA
(62) Divisional to Application Number	:NA
Filing Date	:NA

(71)**Name of Applicant :**
1)SHELL INTERNATIONALE RESEARCH MAATSCHAPPIJ B.V.
Address of Applicant :Carel van Bylandtlaan 30 2596 HR The Hague Netherlands
(72)**Name of Inventor :**
1)DAVIS, Paul
2)TALWALKAR, Sandip Shripad
3)TATAKE, Prashant Anil
4)MALEPPAGARI, Saikiran
5)KARIPEDDI, Rama Tejaswi
6)DHANAPAL, Prem Kumar
7)KUMAR, Arvind

(57) Abstract :
The invention relates to a batch process for preparing a polyether alcohol P having a hydroxyl number of greater than 115 mg KOH/g by reacting starter compound S1 and starter compound S2, which starter compounds have one active hydrogen atom or a plurality of active hydrogen atoms, with one or more alkylene oxides in the presence of a composite metal cyanide complex catalyst, comprising a) forming a starter mixture comprising starter compound S1 and the catalyst and activating the catalyst by adding more than 10 wt.% of an alkylene oxide, based on the weight of the starter mixture before adding the alkylene oxide, followed by b) continuously adding an alkylene oxide; and c) continuously adding starter compound S2; wherein starter compound S1 has (I) a nominal functionality which equals the nominal functionality of polyether alcohol P and a hydroxyl number which is within 10% of the hydroxyl number of polyether alcohol P and/or (II) an equivalent weight of from 10 to 10,000 g/mol; starter compound S2 has an equivalent weight of from 10 to 300 g/mol; no alkylene oxide is added between steps a) and b), and the continuous addition of alkylene oxide in step b) is not interrupted before the total weight of alkylene oxide needed to prepare polyether alcohol P has been added.

No. of Pages : 25 No. of Claims : 10

(12) PATENT APPLICATION PUBLICATION
(21) Application No.202517094994 A
(19) INDIA
(22) Date of filing of Application :03/10/2025
(43) Publication Date : 14/11/2025

(54) Title of the invention : BATCH PROCESS FOR PREPARING A POLYETHER ALCOHOL USING A DOUBLE METAL CYANIDE CATALYST

(51) International classification	:C08G 65/26, C08G 18/48, C08J 9/04
(31) Priority Document No	:202341015355
(32) Priority Date	:07/03/2023
(33) Name of priority country	:India
(86) International Application No	:PCT/EP2024/054908
Filing Date	:27/02/2024
(87) International Publication No	:WO 2024/184125
(61) Patent of Addition to Application Number	:NA
Filing Date	:NA
(62) Divisional to Application Number	:NA
Filing Date	:NA

(71)**Name of Applicant :**
1)SHELL INTERNATIONALE RESEARCH MAATSCHAPPIJ B.V.
Address of Applicant :Carel van Bylandtlaan 30 2596 HR The Hague Netherlands
(72)**Name of Inventor :**
1)DAVIS, Paul
2)TALWALKAR, Sandip Shripad
3)TATAKE, Prashant Anil
4)MALEPPAGARI, Saikiran
5)KARIPEDDI, Rama Tejaswi
6)DHANAPAL, Prem Kumar
7)KUMAR, Arvind

(57) Abstract :
The invention relates to a batch process for preparing a polyether alcohol P having a hydroxyl number of greater than 115 mg KOH/g by reacting starter compound S1 and starter compound S2, with one or more alkylene oxides in the presence of a composite metal cyanide complex catalyst, comprising a) forming a starter mixture comprising starter compound S1 and the catalyst and activating the catalyst by adding an alkylene oxide, followed by b) continuously adding an alkylene oxide; and c) continuously adding starter compound S2; wherein no alkylene oxide is added between steps a) and b), and the continuous addition of alkylene oxide in step b) is not interrupted before the total weight of alkylene oxide needed to prepare polyether alcohol P has been added; step c) is stopped before step b) is stopped and step c) is stopped once less than 80% of the total weight of alkylene oxide needed to prepare polyether alcohol P has been added in step b).

No. of Pages : 25 No. of Claims : 10

(12) PATENT APPLICATION PUBLICATION
(21) Application No.202517095007 A
(19) INDIA
(22) Date of filing of Application :03/10/2025
(43) Publication Date : 14/11/2025

(54) Title of the invention : HYDROPHILICALLY MODIFIED SILICONE PRESSURE SENSITIVE ADHESIVE

(51) International classification	:C09J 183/04, C08L 83/04
(31) Priority Document No	:18/128688
(32) Priority Date	:30/03/2023
(33) Name of priority country	:U.S.A.
(86) International Application No	:PCT/US2024/021578
Filing Date	:27/03/2024
(87) International Publication No	:WO 2024/206368
(61) Patent of Addition to Application Number	:NA
Filing Date	:NA
(62) Divisional to Application Number	:NA
Filing Date	:NA

(71)**Name of Applicant :**
1)MOMENTIVE PERFORMANCE MATERIALS INC.
Address of Applicant :2750 Balltown Road Niskayuna, New York 12309 U.S.A.
(72)**Name of Inventor :**
1)MEHRA, Meenal
2)NAIK, Sandeep
3)SICLOVAN, Tiberiu Mircea
4)SANNIGRAHI, Arindam
5)DASGUPTA, Debarshi
6)MISHRA, Praveen
7)DOLAI, Sukanta

(57) Abstract :
A novel hydrophylically modified silicone and a composition for forming a hydrophylically modified silicone pressure sensitive adhesive is shown and described herein. The comprises comprises (i) a MQ silicone resin, (ii) a polyorganosiloxane, and (iii) a siloxane comprising a range of hydrophilic functional groups. The mixture of (i), (ii), and (iii) is self-catalyzing and does not require an external condensation catalyst. The composition is suitable for forming a cured silicone material such as, for example, a pressure sensitive adhesive compatible with polar additives or actives used in various applications.

No. of Pages : 39 No. of Claims : 27

(12) PATENT APPLICATION PUBLICATION
(21) Application No.202517095008 A
(19) INDIA
(22) Date of filing of Application :03/10/2025
(43) Publication Date : 14/11/2025

(54) Title of the invention : SELF-CATALYZING SILICONE COMPOSITION, ADHESIVES FORMED THEREFROM, AND A METHOD OF MAKING SAME

(51) International classification :C09J 183/04
(31) Priority Document No :18/128662
(32) Priority Date :30/03/2023
(33) Name of priority country :U.S.A.
(86) International Application No :PCT/US2024/021955
Filing Date :28/03/2024
(87) International Publication No :WO 2024/206621
(61) Patent of Addition to Application Number :NA
Filing Date :NA
(62) Divisional to Application Number :NA
Filing Date :NA

(71)**Name of Applicant :**
1)MOMENTIVE PERFORMANCE MATERIALS INC.
Address of Applicant :2750 Balltown Road Niskayuna, New York 12309 U.S.A.
(72)**Name of Inventor :**
1)MEHRA, Meenal
2)NAIK, Sandeep
3)SICLOVAN, Tiberiu Mircea
4)SANNIGRAHI, Arindam
5)DASGUPTA, Debarshi
6)MISHRA, Praveen
7)DOLAI, Sukanta

(57) Abstract :
A process for forming a silicone material is shown and described herein. The process comprises reacting (i) a MQ silicone resin, (ii) a polyorganosiloxane, and (iii) a hydrophilic functional siloxane, wherein the reaction is conducted in the absence of an external catalyst. The mixture of (i), (ii), and (iii) is self-catalyzing and does not require an external condensation catalyst. The process is suitable for forming a cured silicone material such as, for example, a pressure sensitive adhesive.

No. of Pages : 37 No. of Claims : 23

(12) PATENT APPLICATION PUBLICATION
(21) Application No.202517096067 A
(19) INDIA
(22) Date of filing of Application :06/10/2025
(43) Publication Date : 14/11/2025

(54) Title of the invention : PREDICTION OUTPUT BASED ON A MODEL

(51) International classification	:H04W 24/02, H04W 24/10
(31) Priority Document No	:2305560.1
(32) Priority Date	:14/04/2023
(33) Name of priority country	:U.K.
(86) International Application No	:PCT/JP2024/014048
Filing Date	:05/04/2024
(87) International Publication No	:WO 2024/214642
(61) Patent of Addition to Application Number	:NA
Filing Date	:NA
(62) Divisional to Application Number	:NA
Filing Date	:NA

(71)**Name of Applicant :**
1)NEC CORPORATION
Address of Applicant :7-1, Shiba 5-chome, Minato-ku, Tokyo 1088001 Japan
(72)**Name of Inventor :**
1)DEOGUN Pravjyot
2)WANG Xuelong
3)GUPTA Neeraj

(57) Abstract :
The present disclosure relates to data collection for AI/ML model management and monitoring. In one described embodiment a method performed by a user equipment, UE, comprises: receiving from a network node, a first indication for a model management decision and a second indication for model performance reporting; in a case where the first indication does not indicate activation of the model and the second indication enables model performance reporting, running the model and reporting model performance to the network node without using an output from the model to control communications with the network node. Various other methods are disclosed including corresponding network node methods.

No. of Pages : 55 No. of Claims : 52

(12) PATENT APPLICATION PUBLICATION
(21) Application No.202517096068 A
(19) INDIA
(22) Date of filing of Application :06/10/2025
(43) Publication Date : 14/11/2025

(54) Title of the invention : HANDLING CONNECTION REJECTIONS VIA U2U RELAY ASSOCIATED WITH BACKOFF TIMES ON BEHALF OF A SOURCE END WTRU

(51) International classification	:H04W 76/14, H04W 76/18, H04W 88/04
(31) Priority Document No	:63/457616
(32) Priority Date	:06/04/2023
(33) Name of priority country	:U.S.A.
(86) International Application No	:PCT/US2024/022958
Filing Date	:04/04/2024
(87) International Publication No	:WO 2024/211495
(61) Patent of Addition to Application Number	:NA
Filing Date	:NA
(62) Divisional to Application Number	:NA
Filing Date	:NA

(71)**Name of Applicant :**
1)INTERDIGITAL PATENT HOLDINGS, INC.
Address of Applicant :200 Bellevue Parkway Suite 300 Wilmington, DE 19809 U.S.A.
(72)**Name of Inventor :**
1)SARATHCHANDRA, Magurawalage Chathura Madhusanka
2)PERRAS, Michelle
3)FERDI, Samir
4)ABBAS, Taimoor
5)SON, Jung Je
6)AHMAD, Saad

(57) Abstract :
Systems and methods are described herein for handling connection rejects via a wireless transmit/receive unit (WTRU)-to-WTRU (U2U) relay associated with backoff times on behalf of a source end WTRU. A relay WTRU may retry to establish connection with a target WTRU on behalf of a source WTRU, for example, based on receiving a rejection (e g., with a backoff value) from the target WTRU. The source WTRU may associate the reject message to the target WTRU, and the relay WTRU may be available to reach other target WTRUs. The relay WTRU may send a reject message to other source WTRUs (e.g., if the back off duration is active, running) for the same target WTRU.

No. of Pages : 31 No. of Claims : 20

(12) PATENT APPLICATION PUBLICATION
(21) Application No.202517096069 A
(19) INDIA
(22) Date of filing of Application :06/10/2025
(43) Publication Date : 14/11/2025

(54) Title of the invention : CODING VIDEO DATA ON A GPU

(51) International classification	:G06N 3/045, G06N 3/063, G06T 1/20, G06V 10/44, G06V 10/82
(31) Priority Document No	:2304815.0
(32) Priority Date	:31/03/2023
(33) Name of priority country	:U.K.
(86) International Application No	:PCT/GB2024/050852
Filing Date	:28/03/2024
(87) International Publication No	:WO 2024/201050
(61) Patent of Addition to Application Number	:NA
Filing Date	:NA
(62) Divisional to Application Number	:NA
Filing Date	:NA

(71)**Name of Applicant :**
1)V-NOVA INTERNATIONAL LIMITED
Address of Applicant :Level 2 20 Eastbourne Terrace Paddington London Greater London W2 6LG U.K.
(72)**Name of Inventor :**
1)MEHTA, Charvi

(57) Abstract :
There is provided a method of pre-processing input data prior to processing the input data on a GPU using one or more tensor operations. The input data comprises image data and image processing data. The method comprising: receiving the image data, wherein the image data has a first data type; identifying the image processing data to be used to process the image data, wherein the image processing data has a second data type; identifying that the first data type and the second data type are different; and converting at least one of the data type of the image data or the data type of the image processing data to a third data type such that both the image data and the image processing data have a same data type supported by the GPU for the one or more tensor operations.

No. of Pages : 33 No. of Claims : 23

(12) PATENT APPLICATION PUBLICATION
(21) Application No.202517096087 A
(19) INDIA
(22) Date of filing of Application :06/10/2025
(43) Publication Date : 14/11/2025

(54) Title of the invention : METHODS, DEVICES, AND COMPUTER READABLE STORAGE MEDIUM FOR COMMUNICATION

(51) International classification	:H04B 1/7163	(71)**Name of Applicant :**
(31) Priority Document No	:NA	**1)HUAWEI TECHNOLOGIES CO., LTD.**
(32) Priority Date	:NA	Address of Applicant :Huawei Administration Building, Bantian, Longgang District Shenzhen, Guangdong 518129 China
(33) Name of priority country	:NA	
(86) International Application No	:PCT/CN2023/085220	(72)**Name of Inventor :**
Filing Date	:30/03/2023	**1)CHITRAKAR, Rojan**
(87) International Publication No	:WO 2024/197738	**2)HUANG, Lei**
(61) Patent of Addition to Application Number	:NA	**3)WU, Kuan**
Filing Date	:NA	**4)LI, Yunbo**
(62) Divisional to Application Number	:NA	
Filing Date	:NA	

(57) Abstract :
Example embodiments relate to methods, devices and a computer readable storage medium for communication. In an example method, a first terminal device assigns a first subset of blocks in a set of blocks of a block-based time structure to a second device or a set of devices including the second device; and transmits to the second device, an indication message indicating that the first subset of blocks are assigned to the second device or the set of devices. This way, the power waste can be avoided for the second device in listening to all the blocks.

No. of Pages : 38 No. of Claims : 31

(12) PATENT APPLICATION PUBLICATION
(21) Application No.202517096090 A
(19) INDIA
(22) Date of filing of Application :06/10/2025
(43) Publication Date : 14/11/2025

(54) Title of the invention : PRINTED CIRCUIT BOARD STRUCTURE ACCOMMODATING THERMAL INTERFACE MATERIAL, AND ELECTRONIC DEVICE COMPRISING SAME

(51) International classification	:H05K 1/02, H05K 1/11, C09K 5/10
(31) Priority Document No	:10-2023-0081724
(32) Priority Date	:26/06/2023
(33) Name of priority country	:Republic of Korea
(86) International Application No	:PCT/KR2024/005494
Filing Date	:24/04/2024
(87) International Publication No	:WO 2025/005423
(61) Patent of Addition to Application Number	:NA
Filing Date	:NA
(62) Divisional to Application Number	:NA
Filing Date	:NA

(71)**Name of Applicant :**
1)SAMSUNG ELECTRONICS CO., LTD.
Address of Applicant :129 Samsung-ro Yeongtong-gu, Suwon-si Gyeonggi-do 16677 Republic of Korea
(72)**Name of Inventor :**
1)KIM, Joohan
2)CHO, Yonglak
3)PARK, Min

(57) Abstract :
A printed circuit board structure (200) according to an embodiment may comprise: a first printed circuit board (210); an interposer (230); a second printed circuit board (220); and a mounting layer (241) having a base hole connected to the second printed circuit board, a support layer (242) provided on the opposite side of the mounting layer with respect to the second printed circuit board, and a visible layer (243) connected to the support layer and having a material having transparency.

No. of Pages : 26 No. of Claims : 15

(12) PATENT APPLICATION PUBLICATION
(21) Application No.202517095807 A
(19) INDIA
(22) Date of filing of Application :06/10/2025
(43) Publication Date : 14/11/2025

(54) Title of the invention : BEARING COMPRISING AN OIL-CONVEYING MEANS

(51) International classification :F16H 57/04
(31) Priority Document No :FR2303166
(32) Priority Date :31/03/2023
(33) Name of priority country :France
(86) International Application No :PCT/EP2024/058547
Filing Date :28/03/2024
(87) International Publication No :WO 2024/200689
(61) Patent of Addition to Application Number :NA
Filing Date :NA
(62) Divisional to Application Number :NA
Filing Date :NA

(71)**Name of Applicant :**
1)HORSE POWERTRAIN SOLUTIONS, S.L.U.
Address of Applicant :Av. de Europa, 1, Edificio A, Madrid 28108 Alcobendas Spain
(72)**Name of Inventor :**
1)FERREIRA, Rémi
2)GAILLIARD, Fabien

(57) Abstract :
The invention relates to a bearing (10) comprising a first bore intended to receive a rotational guide means (40) for a shaft (20), a second bore intended to be passed through by such a shaft (20), the first and second bores being coaxial or substantially coaxial with a main axis (AP) of the bearing (10), the bearing (10) comprising a shoulder extending radially from or substantially from the second bore, the shoulder comprising an outer surface, the shoulder comprising a means for conveying lubricating oil under pressure from the outer surface to the second bore.

No. of Pages : 14 No. of Claims : 12

(12) PATENT APPLICATION PUBLICATION
(21) Application No.202517095808 A
(19) INDIA
(22) Date of filing of Application :06/10/2025
(43) Publication Date : 14/11/2025

(54) Title of the invention : SYSTEMS AND METHODS FOR AUTHENTICATION WITH TRANSACTION CARDS

(51) International classification	:G06Q 20/34, H04L 9/08
(31) Priority Document No	:18/128582
(32) Priority Date	:30/03/2023
(33) Name of priority country	:U.S.A.
(86) International Application No	:PCT/US2024/020670
Filing Date	:20/03/2024
(87) International Publication No	:WO 2024/206012
(61) Patent of Addition to Application Number	:NA
Filing Date	:NA
(62) Divisional to Application Number	:NA
Filing Date	:NA

(71)**Name of Applicant :**
1)CAPITAL ONE SERVICES LLC
Address of Applicant :1680 Capital One Drive McLean, Virginia 22102 U.S.A.
(72)**Name of Inventor :**
1)OSBORN, Kevin
2)RULE, Jeffrey

(57) Abstract :
The present embodiments describe systems and methods for resynchronizing a counter value associated with a contactless card. The system includes a card, a client device, a client device application, and a server. The method includes generating a cryptogram including the counter value, transmitting the cryptogram to the client device, decrypting the cryptogram and thus acquiring the counter value. This method provides a quick and easy way to verify and re-sync the counter value between a card, a server, and a client device.

No. of Pages : 40 No. of Claims : 20

(12) PATENT APPLICATION PUBLICATION

(21) Application No.202517095865 A

(19) INDIA

(22) Date of filing of Application :06/10/2025

(43) Publication Date : 14/11/2025

(54) Title of the invention : JOINT COMMUNICATION AND SENSING

(51) International classification	:H04L 5/00	(71)**Name of Applicant :**
(31) Priority Document No	:NA	**1)TELEFONAKTIEBOLAGET LM ERICSSON (PUBL)**
(32) Priority Date	:NA	Address of Applicant :SE-164 83 STOCKHOLM Sweden
(33) Name of priority country	:NA	(72)**Name of Inventor :**
(86) International Application No	:PCT/SE2023/050470	**1)PARKVALL, Stefan**
Filing Date	:12/05/2023	**2)BALDEMAIR, Robert**
(87) International Publication No	:WO 2024/237821	**3)BEHRAVAN, Ali**
(61) Patent of Addition to Application Number	:NA	**4)DAHLMAN, Erik**
Filing Date	:NA	**5)BJÖRKEGREN, Håkan**
(62) Divisional to Application Number	:NA	
Filing Date	:NA	

(57) Abstract :

There is disclosed a method of of operating a radio node in a wireless communication network, the radio node being adapted for wireless communication, and being adapted for sensing and/or radar operation, the method comprising performing a sensing operation based on a set of reference signalling parameters, the set of reference signalling parameters being one of a plurality of sets of reference signalling parameters, wherein the sensing operation pertains to reference signalling according to the operating set of RS parameters. The disclosure also pertains to related devices and methods.

No. of Pages : 85 No. of Claims : 11

(12) PATENT APPLICATION PUBLICATION
(21) Application No.202517095866 A
(19) INDIA
(22) Date of filing of Application :06/10/2025
(43) Publication Date : 14/11/2025

(54) Title of the invention : COMBINATIONS OF RETINALDEHYDE DEHYDROGENASE 1 (RALDH1) INHIBITORS AND IMMUNOSTIMULATORS AND METHODS USING SAME

(51) International classification	:A61K 31/395, A61K 31/496, A61K 31/47, A61K 31/445, A61K 31/33
(31) Priority Document No	:63/452978
(32) Priority Date	:17/03/2023
(33) Name of priority country	:U.S.A.
(86) International Application No	:PCT/US2024/020160
Filing Date	:15/03/2024
(87) International Publication No	:WO 2024/196769
(61) Patent of Addition to Application Number	:NA
Filing Date	:NA
(62) Divisional to Application Number	:NA
Filing Date	:NA

(71)**Name of Applicant :**
1)THE TRUSTEES OF THE UNIVERSITY OF PENNSYLVANIA
Address of Applicant :3600 Civic Center Boulevard, 9th Floor Philadelphia, Pennsylvania 19104 U.S.A.
2)GOVERNMENT OF THE UNITED STATES OF AMERICA, AS REPRESENTED BY THE SECRETARY, DEPARTMENT OF HEALTH AND HUMAN SERVICES, NATIONAL INSTITUTES OF HEALTH
(72)**Name of Inventor :**
1)HALDAR, Malay
2)RAI BANTUKALLU, Ganesha
3)YANG, Shyh Ming
4)MARTINEZ, Natalia Julia
5)SIMEONOV, Anton
6)ZAKHAROV, Alexey Vladimirovich
7)YASGAR, Adam Scott

(57) Abstract :
The present disclosure relates in part to methods of treating a solid tumor in a subject in need thereof, the method comprising administering to the subject a retinaldehyde dehydrogenase 1 (RALDH1) inhibitor and an immunostimulator. The present disclosure further relates to pharmaceutical compositions comprising an RALDH1 inhibitor and an immunostimulator.

No. of Pages : 125 No. of Claims : 12

(12) PATENT APPLICATION PUBLICATION
(21) Application No.202517095868 A
(19) INDIA
(22) Date of filing of Application :06/10/2025
(43) Publication Date : 14/11/2025

(54) Title of the invention : METHOD OF OPERATING AND ION MOBILITY SPECTROMETER AND APPARATUS

(51) International classification :G01N 27/622
(31) Priority Document No :2306080.9
(32) Priority Date :25/04/2023
(33) Name of priority country :U.K.
(86) International Application No :PCT/GB2024/050878
Filing Date :28/03/2024
(87) International Publication No :WO 2024/224038
(61) Patent of Addition to Application Number :NA
Filing Date :NA
(62) Divisional to Application Number :NA
Filing Date :NA

(71)**Name of Applicant :**
1)SMITHS DETECTION-WATFORD LIMITED
Address of Applicant :Century House Maylands Avenue Hemel Hempstead Hertfordshire HP2 7DE U.K.
(72)**Name of Inventor :**
1)ATKINSON, Jonathan R
2)CLARK, Alastair
3)ARNOLD, Paul

(57) Abstract :
An aspect of the disclosure provides a method of operating an ion mobility spectrometer the ion mobility spectrometer comprising an ioniser, a reaction region adjacent the ioniser, a gate and a detector for detecting the arrival of ions, the method comprising:(i) opening the gate for a first ion-cloud-entry-time to allow a first group of sample ions to travel from the reaction region, through the gate, to the detector to provide a first signal; (ii) opening the gate for a second ion-cloud-entry-time to a second group of sample ions to travel from the reaction region, through the gate, to the detector, to provide a second signal wherein, during the second ion-cloud-entry-time, the gate is closed for a shutter time and then reopened; and, the method further comprising (iii) determining a characteristic of the sample ions based on the first signal and the second signal.

No. of Pages : 25 No. of Claims : 16

(12) PATENT APPLICATION PUBLICATION
(21) Application No.202517095898 A
(19) INDIA
(22) Date of filing of Application :06/10/2025
(43) Publication Date : 14/11/2025

(54) Title of the invention : METHOD AND APPARATUS FOR SEARCHING FOR CONTROL INFORMATION IN WIRELESS COMMUNICATION SYSTEM

(51) International classification	:H04L 5/00, H04L 1/18, H04W 72/23
(31) Priority Document No	:10-2023-0045928
(32) Priority Date	:07/04/2023
(33) Name of priority country	:Republic of Korea
(86) International Application No	:PCT/KR2024/095666
Filing Date	:04/04/2024
(87) International Publication No	:WO 2024/210725
(61) Patent of Addition to Application Number	:NA
Filing Date	:NA
(62) Divisional to Application Number	:NA
Filing Date	:NA

(71)**Name of Applicant :**
1)SAMSUNG ELECTRONICS CO., LTD.
Address of Applicant :129, Samsung-ro, Yeongtong-gu, Suwon-si, Gyeonggi-do 16677 Republic of Korea
(72)**Name of Inventor :**
1)PARK, Sungjin
2)KIM, Youngbum
3)RYU, Hyunsuk
4)PARK, Kyoungmin

(57) Abstract :
The present disclosure relates to a 5G or 6G communication system for supporting higher data transmission rates. A method of a terminal in a communication system, according to one embodiment of the present disclosure, may comprise the steps of: receiving, from a base station, downlink control information (DCI) including a field instructing skipping of physical downlink control channel (PDCCH) monitoring during a specific period in an active bandwidth part (BWP) within a serving cell; skipping PDCCH monitoring from a first slot after the last symbol of the PDCCH to which the DCI including the field is provided; transmitting, to the base station, a physical uplink control channel (PUCCH) or physical uplink shared channel (PUSCH) including a negative acknowledgment (NACK) value; and terminating the skipping of PDCCH monitoring from the first slot after the last symbol of the PUCCH or PUSCH.

No. of Pages : 170 No. of Claims : 15

(12) PATENT APPLICATION PUBLICATION
(19) INDIA
(22) Date of filing of Application :03/10/2025
(21) Application No.202517095160 A
(43) Publication Date : 14/11/2025

(54) Title of the invention : CONFIGURED GRANT MUTING PATTERN FOR CONFIGURED GRANT PUSCH USAGE

(51) International classification :H04W 72/23, H04L 5/00
(31) Priority Document No :63/457036
(32) Priority Date :04/04/2023
(33) Name of priority country :U.S.A.
(86) International Application No :PCT/US2024/023000
Filing Date :04/04/2024
(87) International Publication No :WO 2024/211522
(61) Patent of Addition to Application Number :NA
Filing Date :NA
(62) Divisional to Application Number :NA
Filing Date :NA

(71)**Name of Applicant :**
1)INTERDIGITAL PATENT HOLDINGS, INC.
Address of Applicant :200 Bellevue Parkway Suite 300 Wilmington, DE 19809 U.S.A.
(72)**Name of Inventor :**
1)RAO, Jaya
2)NEGUSSE, Senay
3)MARINIER, Paul
4)LUTCHOOMUN, Tejaswinee
5)TEYEB, Oumer
6)KINI, Ananth
7)MOSTAFA, Ahmed
8)OGNENOSKI, Ognen

(57) Abstract :
Instrumentalities are described for determining an indication of a CG muting pattern for CG RUSCH usage. A WTRU may receive configuration information comprising one or more of a multi-PUSCH configured grant (CG) configuration, a set of one or more CG muting patterns, criteria for selecting one or more CG muting patterns, or threshold values associated with one or more of payload size, remaining delay, and number of repetitions. The WTRU may receive a plurality of PDUs associated with a PDU set. The WTRU may determine a RUSCH usage pattern based on at least the plurality of PDUs associated with the PDU set. The WTRU may select one or more configured grant muting patterns from a configured set based on at least the determined RUSCH usage pattern. The WTRU may transmit an indication containing an index to the selected one or more configured grant muting patterns.

No. of Pages : 65 No. of Claims : 15

(12) PATENT APPLICATION PUBLICATION
(21) Application No.202517095165 A
(19) INDIA
(22) Date of filing of Application :03/10/2025
(43) Publication Date : 14/11/2025

(54) Title of the invention : METHOD USED IN NODE FOR WIRELESS COMMUNICATION, AND APPARATUS

(51) International classification :H04W 72/0446
(31) Priority Document No :202310203533.9
(32) Priority Date :03/03/2023
(33) Name of priority country :China
(86) International Application No :PCT/CN2024/079772
Filing Date :03/03/2024
(87) International Publication No :WO 2024/183668
(61) Patent of Addition to Application Number :NA
Filing Date :NA
(62) Divisional to Application Number :NA
Filing Date :NA

(71)**Name of Applicant :**
1)SHANGHAI LANGBO COMMUNICATION TECHNOLOGY COMPANY LIMITED
Address of Applicant :Room A2117, Building B, No.555, Dongchuan Road Minhang District, Shanghai 200240 China
(72)**Name of Inventor :**
1)WU, Lu
2)ZHANG, Xiaobo

(57) Abstract :
Disclosed in the present application are a method used in a node for wireless communication, and an apparatus. The method comprises: a first node receiving a plurality of SSB resource configurations, any SSB resource configuration amongst the plurality of SSB resource configurations being used for indicating at least one SSB resource, and the plurality of SSB resource configurations being all associated with a first cell; receiving a first information block, the first information block being used for determining a first SSB resource configuration; receiving a first signaling on the first cell, the first signaling being used for scheduling a first signal; and sending the first signal on the first cell, wherein a time domain resource occupied by the first signal depends on only the first SSB resource configuration amongst the plurality of SSB resource configurations, or the time domain resource occupied by the first signal depends on all SSB resources indicated by the plurality of SSB resource configurations. The present application can improve the network side energy efficiency and system flexibility.

No. of Pages : 71 No. of Claims : 28

(12) PATENT APPLICATION PUBLICATION
(21) Application No.202517095166 A
(19) INDIA
(22) Date of filing of Application :03/10/2025
(43) Publication Date : 14/11/2025

(54) Title of the invention : KEY GENERATION METHODS, AND DEVICES

(51) International classification :H04L 9/08
(31) Priority Document No :NA
(32) Priority Date :NA
(33) Name of priority country :NA
(86) International Application No :PCT/CN2023/080938
Filing Date :10/03/2023
(87) International Publication No :WO 2024/187324
(61) Patent of Addition to Application Number :NA
Filing Date :NA
(62) Divisional to Application Number :NA
Filing Date :NA

(71)**Name of Applicant :**
1)GUANGDONG OPPO MOBILE TELECOMMUNICATIONS CORP., LTD.
Address of Applicant :No.18,Haibin Road,Wusha,Chang'an Dongguan, Guangdong 523860 China
(72)**Name of Inventor :**
1)LI, Meng
2)GAN, Lu
3)SHI, Cong

(57) Abstract :
The present application relates to key generation methods, devices, a computer readable storage medium, a computer program product and a computer program. A method comprises: a first device sends a plurality of first messages to a plurality of second devices, different first messages among the plurality of first messages occupying different time domain ranges, and the plurality of first messages being used for the plurality of second devices to generate keys; the first device receives a plurality of second messages sent by the plurality of second devices, different second messages among the plurality of second messages being related to the keys of the different second devices; and the first device sends a plurality of third messages to the plurality of second devices, different third messages among the plurality of third messages being used for the different second devices to determine a group key.

No. of Pages : 79 No. of Claims : 21

(12) PATENT APPLICATION PUBLICATION
(21) Application No.202517095168 A
(19) INDIA
(22) Date of filing of Application :03/10/2025
(43) Publication Date : 14/11/2025

(54) Title of the invention : SIDELINK TRANSMISSION METHOD AND TERMINAL DEVICE

(51) International classification :H04W 72/04
(31) Priority Document No :NA
(32) Priority Date :NA
(33) Name of priority country :NA
(86) International Application No :PCT/CN2023/080614
Filing Date :09/03/2023
(87) International Publication No :WO 2024/183076
(61) Patent of Addition to Application Number :NA
Filing Date :NA
(62) Divisional to Application Number :NA
Filing Date :NA

(71)**Name of Applicant :**
1)GUANGDONG OPPO MOBILE TELECOMMUNICATIONS CORP. , LTD.
Address of Applicant :No. 18, Haibin Road, Wusha, Chang'an Dongguan, Guangdong 523860 China
(72)**Name of Inventor :**
1)ZHAO, Zhenshan
2)DING, Yi
3)WU, Zuomin

(57) Abstract :
Provided are a sidelink transmission method and a terminal device. The method comprises: a first terminal device receiving or sending a first PSFCH in a first time unit, wherein the first PSFCH is used for bearing first sidelink feedback information corresponding to one or more physical sidelink shared channels (PSSCHs) in a second time unit, and either of the first time unit and the second time unit comprises M consecutive time slots, M being a positive integer greater than 1. In the above technical solution, the transmission and feedback of sidelink data are performed on the basis of time units, and one time unit comprises a plurality of time slots, such that the transmission and feedback efficiency of the sidelink data can be effectively improved.

No. of Pages : 127 No. of Claims : 15

(12) PATENT APPLICATION PUBLICATION
(21) Application No.202517096091 A
(19) INDIA
(22) Date of filing of Application :06/10/2025
(43) Publication Date : 14/11/2025

(54) Title of the invention : STANDALONE NON-PUBLIC NETWORK SELECTION BASED ON WIRELESS SIGNAL THRESHOLD

(51) International classification	:H04W 48/18, H04W 60/00
(31) Priority Document No	:63/457447
(32) Priority Date	:06/04/2023
(33) Name of priority country	:U.S.A.
(86) International Application No	:PCT/US2024/023177
Filing Date	:05/04/2024
(87) International Publication No	:WO 2024/211643
(61) Patent of Addition to Application Number	:NA
Filing Date	:NA
(62) Divisional to Application Number	:NA
Filing Date	:NA

(71)**Name of Applicant :**
1)INTERDIGITAL PATENT HOLDINGS, INC.
Address of Applicant :200 Bellevue Parkway Suite 300 Wilmington, DE 19809 U.S.A.
(72)**Name of Inventor :**
1)WANG, Guanzhou
2)STARSINIC, Michael
3)AHMAD, Saad
4)SETHI, Anuj

(57) Abstract :
A wireless transmit/receive unit (WTRU) be used to provide Standalone Non-Public network (SNPN) selection based on a wireless signal threshold. The WTRU may receive configuration information, The configuration information may indicate one or more standalone non-public network (SNPN) identities and may indicate at least a received signal quality threshold. It may be determined that the WTRU supports a signal level enhanced network selection (SENSE) for an SNPN selection. A received signal may be measured when it is determined that the WTRU supports SENSE for the SNPN selection. The received signal may be associated with an SNPN identity from one or more SNPN identities. A message may be sent to a network node when the received signal associated with the SNPN satisfies the received signal quality threshold. The message may indicate a request to register the WTRU with the SNPN identity.

No. of Pages : 25 No. of Claims : 20

(12) PATENT APPLICATION PUBLICATION
(21) Application No.202517096092 A
(19) INDIA
(22) Date of filing of Application :06/10/2025
(43) Publication Date : 14/11/2025

(54) Title of the invention : METHODS AND APPARATUS FOR DISCOVERY AND AUTHORIZATION OF CLIENT WIRELESS TRANSMIT/RECEIVE UNIT (WTRU) FOR SIDELINK POSITIONING

(51) International classification	:H04W 64/00, G01S 5/00, G01S 5/02, H04L 67/51, H04L 67/52
(31) Priority Document No	:63/457661
(32) Priority Date	:06/04/2023
(33) Name of priority country	:U.S.A.
(86) International Application No	:PCT/US2024/023356
Filing Date	:05/04/2024
(87) International Publication No	:WO 2024/211773
(61) Patent of Addition to Application Number	:NA
Filing Date	:NA
(62) Divisional to Application Number	:NA
Filing Date	:NA

(71)**Name of Applicant :**
1)INTERDIGITAL PATENT HOLDINGS, INC.
Address of Applicant :200 Bellevue Parkway, Suite 300 Wilmington, Delaware 19809 U.S.A.
(72)**Name of Inventor :**
1)SON, Jung Je
2)SETHI, Anuj
3)ABBAS, Taimoor
4)BRUSILOVSKY, Alec

(57) Abstract :
This disclosure generally pertains to procedures, methods, architectures, apparatus, systems, devices, and computer program products for, and/or directed to the discovery and/or authorization of client Wireless Transmit/Receive Units (WTRUs) for sidelink positioning in a wireless network.

No. of Pages : 49 No. of Claims : 22

(12) PATENT APPLICATION PUBLICATION
(19) INDIA
(22) Date of filing of Application :06/10/2025
(21) Application No.202517096116 A
(43) Publication Date : 14/11/2025

(54) Title of the invention : INJECTION DEVICE

(51) International classification	:A61F 9/00, A61M 5/20, A61M 5/31, A61M 5/315, A61M 5/32
(31) Priority Document No	:2023202488
(32) Priority Date	:24/04/2023
(33) Name of priority country	:Australia
(86) International Application No	:PCT/AU2024/050387
Filing Date	:23/04/2024
(87) International Publication No	:WO 2024/221040
(61) Patent of Addition to Application Number	:NA
Filing Date	:NA
(62) Divisional to Application Number	:NA
Filing Date	:NA

(71)**Name of Applicant :**
1)I D & E PTY LTD
Address of Applicant :701-703 Parramatta Road Leichhardt, New South Wales 2040 Australia
(72)**Name of Inventor :**
1)SOKOLOV, Richard
2)WALLIS, Huw Umberto
3)BOVENDEERT, Adrianus Johannes
4)VAN GRIETHUIJSEN, Philip Johan Alexander Frank
5)CHIKOVSKII, Nikolai

(57) Abstract :
The present invention relates to an injection device comprising an elongated housing having a proximal end and a distal end, the proximal end comprising an actuation mechanism, wherein: said elongated housing defines an inner lumen between said proximal and distal ends which is adapted to receive and hold a formulation chamber relative to said actuation mechanism, said formulation chamber also having corresponding proximal and distal ends, and having a stopper between its proximal and distal ends for retaining formulation in said formulation chamber; said actuation mechanism having corresponding proximal and distal ends, and comprises an actuation housing with a proximal end, and a distal end adapted for engaging said elongated housing, wherein said actuation mechanism includes a plunger, the distal end of said plunger engaging said stopper or being adapted to engage said stopper, said plunger being in communication with at least one driving spring which biases the plunger distally when the actuation mechanism is primed for injection, wherein said plunger is held in position against said bias by at least one retention arm or toggle having at least one first surface adapted to engage an opposed complementary second surface to hold said plunger in a first unactuated position when the actuation mechanism is primed for injection, the first and second surfaces being held in an engaged position by a restrainer which translates from an unactuated position or configuration to an actuated position or configuration when triggered, thereby allowing uncoupling of the engagement between the first and second surfaces and release of the plunger to move distally. The present invention also relates to needle hubs, actuation mechanisms, dosing mechanisms and assembled elongated housings for use with such injection devices, as well as methods of using such devices.

No. of Pages : 82 No. of Claims : 180

(12) PATENT APPLICATION PUBLICATION
(19) INDIA
(22) Date of filing of Application :06/10/2025
(21) Application No.202517096130 A
(43) Publication Date : 14/11/2025

(54) Title of the invention : BICYCLIC UREAS AS KINASE INHIBITORS

(51) International classification	:C07D 471/04, C07D 487/04, C07D 487/10, A61P 35/00
(31) Priority Document No	:63/451867
(32) Priority Date	:13/03/2023
(33) Name of priority country	:U.S.A.
(86) International Application No	:PCT/US2024/019525
Filing Date	:12/03/2024
(87) International Publication No	:WO 2024/191996
(61) Patent of Addition to Application Number	:NA
Filing Date	:NA
(62) Divisional to Application Number	:NA
Filing Date	:NA

(71)**Name of Applicant :**
1)INCYTE CORPORATION
Address of Applicant :1801 Augustine Cut-Off Wilmington, Delaware 19803 U.S.A.
(72)**Name of Inventor :**
1)LI, Xin
2)VECHORKIN, Oleg
3)AI, Yanran
4)ATASOYLU, Onur
5)DANG, Hang Thi
6)DOUTY, Brent
7)HE, Chunhong
8)HE, Peng
9)LIANG, Michael
10)NGUYEN, Minh
11)STYDUHAR, Evan
12)WANG, Anlai
13)WANG, Xiaozhao
14)YE, Hai Fen
15)YUE, Eddy W.
16)ZHANG, Ke
17)ZHAO, Peng

(57) Abstract :
The present application provides bicyclic urea compounds that modulate the activity of JAK2, which are useful in the treatment of various diseases, including cancer.

No. of Pages : 381 No. of Claims : 77

(12) PATENT APPLICATION PUBLICATION
(21) Application No.202517095016 A
(19) INDIA
(22) Date of filing of Application :03/10/2025
(43) Publication Date : 14/11/2025

(54) Title of the invention : ELECTRONIC PAYMENT SYSTEM

(51) International classification	:G06Q 20/18, G06Q 20/36, G06Q 20/40
(31) Priority Document No	:63/449717
(32) Priority Date	:03/03/2023
(33) Name of priority country	:U.S.A.
(86) International Application No	:PCT/US2024/017803
Filing Date	:29/02/2024
(87) International Publication No	:WO 2024/186558
(61) Patent of Addition to Application Number	:NA
Filing Date	:NA
(62) Divisional to Application Number	:NA
Filing Date	:NA

(71)**Name of Applicant :**
1)BUFFALO SPRINGS INVESTMENTS, LLLP
Address of Applicant :120 Main Street Canadian, Texas 79014 U.S.A.
(72)**Name of Inventor :**
1)ABRAHAM, Salem

(57) Abstract :
A system receives, from an electronic terminal, a selection of a first user account, and a request to transfer an amount from the first user account to a second user account. In response to authorizing the request, the system updates, in real-time, a database to represent a transfer of at least a portion of the amount to the second user account and automatically generates a data packet containing the amount, an identification of the first user account, an identification of the second user account, and a selection of a digital asset in the first user account. The system then routs the data packet to a digital entity based on the digital asset, the data packet instructing the digital entity to execute a transfer order on a digital asset exchange platform of the digital asset.

No. of Pages : 58 No. of Claims : 21

(12) PATENT APPLICATION PUBLICATION
(21) Application No.202517095037 A
(19) INDIA
(22) Date of filing of Application :03/10/2025
(43) Publication Date : 14/11/2025

(54) Title of the invention : ANTIBODY-LIKE MOLECULE COMPRISING HETERODIMER OF HUMAN CD1B (CLUSTER OF DIFFERENTIATION 1) PROTEIN

(51) International classification	:C07K 16/46, C07K 19/00, C07K 1/00, C12N 15/13, C12N 15/62
(31) Priority Document No	:2023105130
(32) Priority Date	:06/03/2023
(33) Name of priority country	:Russia
(86) International Application No	:PCT/RU2024/050045
Filing Date	:27/02/2024
(87) International Publication No	:WO 2024/186232
(61) Patent of Addition to Application Number	:NA
Filing Date	:NA
(62) Divisional to Application Number	:NA
Filing Date	:NA

(71)**Name of Applicant :**
1)JOINT STOCK COMPANY "BIOCAD"
Address of Applicant :vn. ter. g. poselok Strelna, ul. Svyazi, d. 38, str. 1, pomeshch. 89 Saint Petersburg, 198515 Russia
(72)**Name of Inventor :**
1)POLIAKOV, Dmitrii Nikolaevich
2)LEGOTSKII, Sergei Aleksandrovich
3)DANILOV, Maksim Andreevich
4)BARANOVSKAIA, Marianna Dmitrievna
5)IVANOVA, Kseniia Vitalievna
6)NAZARENKO, Olga Viktorovna
7)IAKOVLEV, Pavel Andreevich
8)MOROZOV, Dmitry Valentinovich

(57) Abstract :
The present invention relates to the field of biotechnology, specifically to antibody-like molecules that comprise a heterodimer of membrane-proximal domains of human CD1b (cluster of differentiation 1) protein, as well as to a process for producing said antibody-like molecules. The invention further relates to a nucleic acid encoding said antibody-like molecule, an expression vector, a host cell for producing said antibody-like molecule and to a method for producing said cell.

No. of Pages : 39 No. of Claims : 26

(12) PATENT APPLICATION PUBLICATION
(21) Application No.202517095038 A
(19) INDIA
(22) Date of filing of Application :03/10/2025
(43) Publication Date : 14/11/2025

(54) Title of the invention : RECYCLABLE MULTILAYER FILMS HAVING A SEALING LAYER FORMED FROM A BLEND OF POLYPROPYLENES

(51) International classification	:B32B 27/08, B32B 27/18, B32B 27/22, B32B 27/32, C08J 5/18
(31) Priority Document No	:23160784.7
(32) Priority Date	:08/03/2023
(33) Name of priority country	:EPO
(86) International Application No	:PCT/EP2024/056146
Filing Date	:08/03/2024
(87) International Publication No	:WO 2024/184505
(61) Patent of Addition to Application Number	:NA
Filing Date	:NA
(62) Divisional to Application Number	:NA
Filing Date	:NA

(71)**Name of Applicant :**
1)BOREALIS GMBH
Address of Applicant :Trabrennstrasse 6-8 1020 Vienna Austria
(72)**Name of Inventor :**
1)WANG, Jingbo
2)GAHLEITNER, Markus
3)BERNREITNER, Klaus
4)NIEDERSÜß, Peter
5)ORTNER, Stefan

(57) Abstract :
A multilayer film (F), comprising, in the given order, the following layers: (A) a skin layer; (B) a core layer; and (C) a sealing layer, comprising at least 90 wt.-% of a polypropylene composition (PC) comprising the following components: i) 20 to 70 wt.-% of a RAHECO having an MFR2 of 0.1 to 10.0 g/10 min; ii) 10 to 50 wt.-% of a first propylene-ethylene random copolymer (R-PP1) having an MFR2of 1.0 to 6.0 g/10 min; and iii) 10 to 50 wt.-% of a second propylene-ethylene random copolymer (R-PP2) having an MFR2 of 7.0 to 20 g/10 min.

No. of Pages : 39 No. of Claims : 15

(12) PATENT APPLICATION PUBLICATION
(21) Application No.202517095050 A
(19) INDIA
(22) Date of filing of Application :03/10/2025
(43) Publication Date : 14/11/2025

(54) Title of the invention : NATURAL COSMETIC COMPOSITION

(51) International classification	:A61K 8/37, A61K 8/40, A61K 8/49, A61K 8/73, A61Q 17/04
(31) Priority Document No	:23161096.5
(32) Priority Date	:10/03/2023
(33) Name of priority country	:EPO
(86) International Application No	:PCT/EP2024/055988
Filing Date	:07/03/2024
(87) International Publication No	:WO 2024/188795
(61) Patent of Addition to Application Number	:NA
Filing Date	:NA
(62) Divisional to Application Number	:NA
Filing Date	:NA

(71)**Name of Applicant :**
1)BASF SE
Address of Applicant :Carl-Bosch-Strasse 38 67056 Ludwigshafen am Rhein Germany
(72)**Name of Inventor :**
1)KRUS, Stanislaw

(57) Abstract :
The present invention relates to a cosmetic composition comprising oryza sativa starch (INCI Oryza Sativa (Rice) Starch) and at least one natural organic thickener as well as the use of a combination of oryza sativa starch (INCI Oryza Sativa (Rice) Starch) and at least one natural organic thickener for stabilization.

No. of Pages : 25 No. of Claims : 14

(12) PATENT APPLICATION PUBLICATION
(21) Application No.202517095051 A
(19) INDIA
(22) Date of filing of Application :03/10/2025
(43) Publication Date : 14/11/2025

(54) Title of the invention : METHOD AND APPARATUS FOR RANDOM ACCESS OF ENHANCED REDUCED CAPABILITY UE

(51) International classification	:H04W 74/0838, H04W 74/00, H04L 1/08, H04W 72/23, H04W 88/02
(31) Priority Document No	:63/464135
(32) Priority Date	:04/05/2023
(33) Name of priority country	:U.S.A.
(86) International Application No	:PCT/KR2024/005770
Filing Date	:29/04/2024
(87) International Publication No	:WO 2024/228527
(61) Patent of Addition to Application Number	:NA
Filing Date	:NA
(62) Divisional to Application Number	:NA
Filing Date	:NA

(71)**Name of Applicant :**
1)SAMSUNG ELECTRONICS CO., LTD.
Address of Applicant :129, Samsung-ro, Yeongtong-gu, Suwon-si, Gyeonggi-do 16677 Republic of Korea
(72)**Name of Inventor :**
1)AGIWAL, Anil
2)LENG, Shiyang
3)JEONG, Kyeongin

(57) Abstract :
The disclosure relates to a 5G or 6G communication system for supporting a higher data transmission rate. The disclosure relates to a user equipment for a reduced capability (RedCap) in a wireless communication system, the UE comprises a transceiver and a processor operatively coupled to the transceiver, the processor configured to receive a message including at least one random access (RA) configuration and a contention free random access (CFRA) resource configuration including an indication of a number of message 1 (Msg1) repetitions, to determine whether a RA configuration, from the at least one RA configuration, is associated with the RedCap and whether the RA configuration is associated with the number of Msg1 repetitions included in the CFRA resource configuration, based on a result of the determination, to select a first RA configuration, from the at least one RA configuration, and to perform an RA procedure based on the first RA configuration.

No. of Pages : 54 No. of Claims : 15

(12) PATENT APPLICATION PUBLICATION
(21) Application No.202517095906 A
(19) INDIA
(22) Date of filing of Application :06/10/2025
(43) Publication Date : 14/11/2025

(54) Title of the invention : PULMONARY TUBERCULOSIS VACCINE, PREPARATION METHOD THEREFOR, AND APPLICATION THEREOF

(51) International classification	:A61K 39/116, A61K 39/04, C07K 19/00, C07K 14/35, C12N 7/00
(31) Priority Document No	:202310249487.6
(32) Priority Date	:15/03/2023
(33) Name of priority country	:China
(86) International Application No	:PCT/CN2024/081888
Filing Date	:15/03/2024
(87) International Publication No	:WO 2024/188336
(61) Patent of Addition to Application Number	:NA
Filing Date	:NA
(62) Divisional to Application Number	:NA
Filing Date	:NA

(71)**Name of Applicant :**
1)CANSINO BIOLOGICS INC.
Address of Applicant :401-420, 4th Floor, West District Biomedical Park No.185 South Street, Economic and Technological Development Zone West District Binhai New Area, Tianjin 300457 China
(72)**Name of Inventor :**
1)XU, Fang
2)ZHU, Tao
3)PENG, Shaodan
4)SHAO, Juan
5)MIAO, Wei
6)TANG, Xue
7)ZHAO, Xiaolong
8)SI, Weixue

(57) Abstract :
Provided is an immunogenic composition, the immunogenic composition comprising one or more pulmonary tuberculosis antigens. After performing mucosal immunization on the body via inhalation, the invention not only has a high level of specific antibodies targeting mycobacterium tuberculosis simultaneously generated in the lungs and body, but can also stimulate a very high cell immune response.

No. of Pages : 21 No. of Claims : 23

(12) PATENT APPLICATION PUBLICATION
(21) Application No.202517095908 A
(19) INDIA
(22) Date of filing of Application :06/10/2025
(43) Publication Date : 14/11/2025

(54) Title of the invention : SERVER AND BATTERY DEVICE

(51) International classification	:G06Q 30/0645, B60L 50/60, B60L 53/14, B60L 53/60, H02J 7/00
(31) Priority Document No	:2023-063055
(32) Priority Date	:07/04/2023
(33) Name of priority country	:Japan
(86) International Application No	:PCT/JP2024/010873
Filing Date	:20/03/2024
(87) International Publication No	:WO 2024/209932
(61) Patent of Addition to Application Number	:NA
Filing Date	:NA
(62) Divisional to Application Number	:NA
Filing Date	:NA

(71)**Name of Applicant :**
1)GLOBAL MOBILITY SERVICE INC.
Address of Applicant :4F Gran First, 15 Kandakonya-cho, Chiyoda-ku, Tokyo 1010035 Japan
(72)**Name of Inventor :**
1)HASHIMOTO Nobuyuki
2)HAGISHIMA Koichi
3)NAKASHIMA Tokushi

(57) Abstract :
The present invention provides a multiplicity of subscription services related to electric vehicles. A server 20 according to one embodiment includes: a confirmation unit 21 for confirming a payment status of a user in accordance with a fee type of the user; and a control unit 22 for determining, on the basis of the payment status, whether to prohibit charging of a battery device 10 mounted in an electric vehicle 1.

No. of Pages : 19 No. of Claims : 7

(12) PATENT APPLICATION PUBLICATION
(21) Application No.202517095937 A
(19) INDIA
(22) Date of filing of Application :06/10/2025
(43) Publication Date : 14/11/2025

(54) Title of the invention : SYSTEM FOR DETERMINING FILTER STATUS

(51) International classification	:B01D 65/10, B01D 65/02, B01D 65/08, B01D 61/10, C02F 1/44
(31) Priority Document No	:U202330840
(32) Priority Date	:12/05/2023
(33) Name of priority country	:Spain
(86) International Application No	:PCT/US2024/028632
Filing Date	:09/05/2024
(87) International Publication No	:WO 2024/238283
(61) Patent of Addition to Application Number	:NA
Filing Date	:NA
(62) Divisional to Application Number	:NA
Filing Date	:NA

(71)**Name of Applicant :**
1)DDP SPECIALTY ELECTRONIC MATERIALS US, LLC
Address of Applicant :974 Centre Road, Bldg. 730 Wilmington, Delaware 19805 U.S.A.
(72)**Name of Inventor :**
1)GILABERT ORIOL, Guillem
2)HAILEMARIAM, Leaelaf Mengistu
3)MASSONS, Gerard
4)SU, Wenyu

(57) Abstract :
An example system for determining a filter status is provided. The system includes a database configured to electronically store data, the data including past performance data of one or more water filtration elements. The system includes a processing device in communication with the database. The processing device is configured to receive as input the past performance data, and identify one or more data points within the past performance data indicative of a cleaning event for the water filtration elements. The processing device is configured to divide the past performance data into individual data segments, each of the individual data segments representing data of the past performance data in-between respective identified cleaning events, fit a mathematical function to each of the individual data segments, and identify a type of fouling occurring during each of the individual data segments based on the mathematical function fitted to the respective individual data segment.

No. of Pages : 40 No. of Claims : 21

(12) PATENT APPLICATION PUBLICATION
(21) Application No.202517095951 A
(19) INDIA
(22) Date of filing of Application :06/10/2025
(43) Publication Date : 14/11/2025

(54) Title of the invention : CHANNEL OPERATION METHOD AND APPARATUS, COMMUNICATION DEVICE, AND STORAGE MEDIUM

(51) International classification	:H04W 72/0453	(71)**Name of Applicant :**
(31) Priority Document No	:NA	**1)GUANGDONG OPPO MOBILE TELECOMMUNICATIONS CORP., LTD.**
(32) Priority Date	:NA	Address of Applicant :No. 18, Haibin Road, Wusha, Chang'an, Dongguan, Guangdong 523860 China
(33) Name of priority country	:NA	
(86) International Application No	:PCT/CN2023/083204	
Filing Date	:22/03/2023	(72)**Name of Inventor :**
(87) International Publication No	:WO 2024/192737	**1)LU, Liuming**
(61) Patent of Addition to Application Number	:NA	**2)ZHOU, Pei**
Filing Date	:NA	**3)LUO, Chaoming**
(62) Divisional to Application Number	:NA	**4)LI, Yapu**
Filing Date	:NA	

(57) Abstract :
A channel operation method and apparatus, a communication device, and a storage medium, relating to the technical field of wireless communications. The method is executed by a first device, and comprises: receiving a dynamic subchannel operation (DSO) mode management frame sent by a second device (401), wherein the DSO mode management frame is used for indicating that a DSO mode between the first device and the second device is an enable mode or a disable mode, the enable mode is a mode allowing a target device to be switched to a target subchannel in a DSO mode for frame exchange, and the target subchannel is indicated by the DSO mode management frame.

No. of Pages : 43 No. of Claims : 40

(12) PATENT APPLICATION PUBLICATION
(21) Application No.202517095952 A
(19) INDIA
(22) Date of filing of Application :06/10/2025
(43) Publication Date : 14/11/2025

(54) Title of the invention : PNEUMATIC TYRE WTH BELT

(51) International classification	:B60C 9/20, B60C 9/18
(31) Priority Document No	:LU503795
(32) Priority Date	:30/03/2023
(33) Name of priority country	:Luxembourg
(86) International Application No	:PCT/EP2024/058117
Filing Date	:26/03/2024
(87) International Publication No	:WO 2024/200442
(61) Patent of Addition to Application Number	:NA
Filing Date	:NA
(62) Divisional to Application Number	:NA
Filing Date	:NA

(71)**Name of Applicant :**
1)APOLLO TYRES GLOBAL R&D B.V.
Address of Applicant :Colosseum 2 7521 PT Enschede Netherlands
(72)**Name of Inventor :**
1)ROELOFS, Bernardus Antonius René

(57) Abstract :
The invention relates to a tyre (10) for a vehicle, the tyre (10) comprising a belt (22), wherein the belt (22) comprises a multilayer composite laminate comprising at least three superposed layers (24, 26, 28), each layer (24, 26, 28) comprising reinforcements (30, 32, 34) being embedded in a rubber, wherein a first layer (24) is arranged on a tread side of the tyre (10) and comprises first reinforcements (30) comprising a heat shrinkable material, wherein a second layer (26) is in contact with the first layer (24) and arranged under the first layer (24), wherein the second layer (26) comprises second reinforcements (26) comprising metal, wherein a third layer (28) is in contact with the second layer (26) and arranged under the second layer (26), wherein the third layer (28) comprises third reinforcements (34) comprising metal, wherein the first reinforcements (30) are assemblies (30) of yarn bundles (36), each yam bundle (36) comprising multiple filaments, and wherein each assembly (30) comprises at least two yarn bundles (36). The invention further relates to a corresponding wheel for a vehicle

No. of Pages : 22 No. of Claims : 18

(12) PATENT APPLICATION PUBLICATION
(21) Application No.202517068120 A
(19) INDIA
(22) Date of filing of Application :17/07/2025
(43) Publication Date : 14/11/2025

(54) Title of the invention : MOSQUITO REPELLENT COMPOSITION AND METHOD FOR PRODUCING SAME

(51) International classification	:A01N 65/24, A01N 65/10, A01N 65/22, A01N 65/12, A01P 17/00
(31) Priority Document No	:10-2023-0016971
(32) Priority Date	:08/02/2023
(33) Name of priority country	:Republic of Korea
(86) International Application No	:PCT/KR2023/011688
Filing Date	:08/08/2023
(87) International Publication No	:WO 2024/167077
(61) Patent of Addition to Application Number	:NA
Filing Date	:NA
(62) Divisional to Application Number	:NA
Filing Date	:NA

(71)**Name of Applicant :**
1)CRENATURE CO., LTD.
Address of Applicant :#204, Startup Incubation Center, Gangneung-Wonju National University, 7 Jukheon-gil Gangneung-si Gangwon-do 25457 Republic of Korea
(72)**Name of Inventor :**
1)KIM, Do-young
2)LEE, Ki-hoon
3)CHOI, Woo-jun

(57) Abstract :
A mosquito repellent composition according to the present invention may be produced by: forming a mixture by mixing 100 to 500 parts by weight of each of Cinnamomum cassia, Amomi Fructus, Chrysanthmi Flos, Agastache rugosa, root of Angelica dahurica, nutmeg, mint, and fennel; preparing a mixed solution by mixing 100 parts by weight of the mixture with 100-700 parts by weight of an ethanol solvent in which the concentration of ethanol is 70-95%; and then performing low-temperature ultrasonic extraction on the mixed solution to extract an effective ingredient extract.

No. of Pages : 25 No. of Claims : 7

(12) PATENT APPLICATION PUBLICATION
(21) Application No.202517068248 A
(19) INDIA
(22) Date of filing of Application :17/07/2025
(43) Publication Date : 14/11/2025

(54) Title of the invention : LIPID NANOPARTICLES FOR THE PREVENTION OF TUBERCULOSIS OR OTHER MYCOBACTERIAL INFECTIONS

(51) International classification	:A61K 39/04, A61K 9/51, A61K 31/7088, A61K 47/24, A61K 47/28
(31) Priority Document No	:63/476916
(32) Priority Date	:22/12/2022
(33) Name of priority country	:U.S.A.
(86) International Application No	:PCT/US2023/085680
Filing Date	:22/12/2023
(87) International Publication No	:WO 2024/138121
(61) Patent of Addition to Application Number	:NA
Filing Date	:NA
(62) Divisional to Application Number	:NA
Filing Date	:NA

(71)**Name of Applicant :**
1)AKAGERA MEDICINES, INC.
Address of Applicant :5 Essex Street Boxford, MA 01921 U.S.A.
(72)**Name of Inventor :**
1)FULTON, Ross
2)DRUMMOND, Daryl, C.
3)FRIEDMAN, Robin
4)COBAUGH, Christian
5)HAYES, Mark, E.

(57) Abstract :
Aspects of the present disclosure provides for improved mycobacterium tuberculosis vaccine compositions of ionizable lipid nanoparticles for the delivery of immunogenic nucleic acids to cells. Anionic phospholipids, including phosphatidyl serine and phosphatidylglycerol are included in the lipid nanoparticles to increase the transfection efficiency in dendritic cells. In some embodiments, the incorporation of mono-unsaturated alkyl chain analogs in dimethylaminopropyl-dioxolane or heterocyclic ketal ionizable lipids in the formulation provided high levels of transfection in human dendritic cells, compared to other ionizable lipids in the same family, and demonstrated good stability to oxidative damage. Other aspects of the present disclosure provide mRNA that encodes for concatenated peptides encoding for multiple MHC-II tuberculosis epitopes, and optionally includes a second mRNA encoding for concatenated MHC-I tuberculosis epitopes.

No. of Pages : 277 No. of Claims : 43

(12) PATENT APPLICATION PUBLICATION
(21) Application No.202517070364 A
(19) INDIA
(22) Date of filing of Application :24/07/2025
(43) Publication Date : 14/11/2025

(54) Title of the invention : METHODS AND SYSTEMS FOR AUGMENTING A REAL-TIME INTRAOPERATIVE X-RAY VIDEO FEED WITH ANATOMICAL AND DEVICE RELATED OVERLAYS AND METRICS

(51) International classification	:A61B 34/25, A61B 90/37
(31) Priority Document No	:63/488655
(32) Priority Date	:06/03/2023
(33) Name of priority country	:U.S.A.
(86) International Application No	:PCT/US2023/067401
Filing Date	:24/05/2023
(87) International Publication No	:WO 2024/186355
(61) Patent of Addition to Application Number	:NA
Filing Date	:NA
(62) Divisional to Application Number	:NA
Filing Date	:NA

(71)**Name of Applicant :**
1)STRYKER CORPORATION
Address of Applicant :2825 Airview Boulevard Kalamzoo, MI 49002 U.S.A.
2)STRYKER EUROPEAN OPERATIONS LIMITED
(72)**Name of Inventor :**
1)WANG, Han-wei
2)KARABEY, Halil
3)PORTER, Stephen
4)LIN, Keng-tsai
5)SHARMA, Nikhil
6)PATIL, Shubham, Suresh
7)KUMAR, Mayank
8)CHATURVEDI, Anirudh, Anupam
9)SATISH, Siddarth
10)LESSMANN, Nikolas

(57) Abstract :
An example method includes: receiving, in real-time, a video stream of an interventional procedure captured by an image-capture device of a body lumen and a device being deployed within the body lumen; identifying, in the video stream, the body lumen and the device being deployed within the body lumen; visually presenting body lumen markers indicating characteristics of the body lumen including a curvature marking and a no-start zone that should be avoided when deploying the device; visually presenting a display of device markers indicating position of the device in real-time during deployment; and providing, on the video stream in real-time, visual indicators of parameters of the device.

No. of Pages : 64 No. of Claims : 7

(12) PATENT APPLICATION PUBLICATION
(21) Application No.202517097038 A
(19) INDIA
(22) Date of filing of Application :08/10/2025
(43) Publication Date : 14/11/2025

(54) Title of the invention : TWO-DOSE DOSAGE SYSTEM FOR A FLUID PRODUCT DISPENSING DEVICE

(51) International classification :A61M 5/315
(31) Priority Document No :FR2301329
(32) Priority Date :13/02/2023
(33) Name of priority country :France
(86) International Application No :PCT/FR2024/050185
Filing Date :12/02/2024
(87) International Publication No :WO 2024/170848
(61) Patent of Addition to Application Number :NA
Filing Date :NA
(62) Divisional to Application Number :NA
Filing Date :NA

(71)**Name of Applicant :**
1)APTAR FRANCE SAS
Address of Applicant :Lieudit Le Prieuré 27110 LE NEUBOURG France
(72)**Name of Inventor :**
1)MICHAUX, Sébastien

(57) Abstract :
Disclosed is a two-dose dosage system (20) for a fluid product dispensing device, said device comprising a syringe-type reservoir (1) containing fluid product, and a piston (2) that is locked to a piston rod (3) and is slidably mounted in the reservoir (1) to dispense the fluid product, the dosage system (20) comprising a first dosing element (21), a second dosing element (22) and a third dosing element (23), the first dosing element (21) being axially non-movably attached to the piston rod (3) so as to axially move together therewith, the third dosing element (23) not being axially movable relative to the reservoir (1), the second dosing element (22) being placed between the first and third dosing elements (21, 23), the second dosing element (22) being slidable relative to the third dosing element (23) when the first dose is dispensed and relative to the first dosing element (21) when the second dose is dispensed.

No. of Pages : 13 No. of Claims : 18

(12) PATENT APPLICATION PUBLICATION
(21) Application No.202517095176 A
(19) INDIA
(22) Date of filing of Application :03/10/2025
(43) Publication Date : 14/11/2025

(54) Title of the invention : METHOD FOR REMOVING UNDESIRED SUBSTANCES FROM WORT AND PROCESS EQUIPMENT FOR BEER PRODUCTION

(51) International classification	:C12C 7/00, C12C 7/22, C12C 13/00, C12C 7/24
(31) Priority Document No	:PA202300244
(32) Priority Date	:19/03/2023
(33) Name of priority country	:Denmark
(86) International Application No	:PCT/EP2024/050583
Filing Date	:11/01/2024
(87) International Publication No	:WO 2024/193861
(61) Patent of Addition to Application Number	:NA
Filing Date	:NA
(62) Divisional to Application Number	:NA
Filing Date	:NA

(71)**Name of Applicant :**
1)FRANK INNOVATION APS
Address of Applicant :O.I. Offersens Vej 9 8230 Åbyhøj Denmark
(72)**Name of Inventor :**
1)FRANK, William

(57) Abstract :
The present invention relates to a method for removing undesired volatile substances from wort for beer production. The method comprises subjecting a produced wort to a boiling and hopping process; and transporting the boiled and flavored wort towards a whirlpool tank via a pipe system. A stripping gas is introduced into a first part of the pipe system to mix with the wort flowing therethrough. The stripping gas, now mixed with stripped volatile substances, is then removed either at a second part of the pipe system positioned downstream to the first part of pipe system, and/or removed from the whirlpool tank.

No. of Pages : 16 No. of Claims : 10

(12) PATENT APPLICATION PUBLICATION
(19) INDIA
(22) Date of filing of Application :03/10/2025
(21) Application No.202517095177 A
(43) Publication Date : 14/11/2025

(54) Title of the invention : SUBSTITUTED INDAZOLE PROPIONIC ACID DERIVATIVE COMPOUNDS AND USES THEREOF AS AMPK ACTIVATORS

(51) International classification	:C07D 231/56, C07D 403/10, C07D 405/04, C07D 409/10, C07D 417/10
(31) Priority Document No	:63/494598
(32) Priority Date	:06/04/2023
(33) Name of priority country	:U.S.A.
(86) International Application No	:PCT/IB2024/053239
Filing Date	:03/04/2024
(87) International Publication No	:WO 2024/209363
(61) Patent of Addition to Application Number	:NA
Filing Date	:NA
(62) Divisional to Application Number	:NA
Filing Date	:NA

(71)**Name of Applicant :**
1)PFIZER INC.
Address of Applicant :66 Hudson Boulevard East New York, New York 10001-2192 U.S.A.
(72)**Name of Inventor :**
1)BHATTACHARYA, Samit Kumar
2)CAMERON, Kimberly O'Keefe
3)CONN, Edward Lee
4)EBNER, David Christopher
5)FERNANDO, Dilinie Prasadhini
6)FILIPSKI, Kevin James
7)GERSTENBERGER, Brian Stephen
8)HUH, Chan Woo
9)KUNG, Daniel Wei-Shung
10)LEE, Esther Cheng Yin
11)MATHIOWETZ, Alan Martin
12)MEAR, Sarah Jane
13)O'BRIEN, Jessica Gloria Katherine
14)SMITH, Aaron Christopher
15)TU, Meihua Mike

(57) Abstract :
The invention relates to substituted indazole propionic acid derivatives of formula (I), pharmaceutically acceptable salts, tautomers, or pharmaceutically acceptable salts of the tautomers thereof that can activate adenosine 5'-monophosphate- activated protein kinase (AMPK). The invention further relates to pharmaceutical compositions comprising AMPK-activating substituted indazole propionic acid derivatives of formula (I), pharmaceutically acceptable salts, tautomers, or pharmaceutically acceptable salts of the tautomers thereof and at least one pharmaceutically acceptable excipient, and methods of treating a condition comprising administering AMPK-activating substituted indazole propionic acid derivatives of formula (I), pharmaceutically acceptable salts, tautomers, or pharmaceutically acceptable salts of the tautomers thereof.

No. of Pages : 106 No. of Claims : 20

(12) PATENT APPLICATION PUBLICATION
(21) Application No.202517095193 A
(19) INDIA
(22) Date of filing of Application :03/10/2025
(43) Publication Date : 14/11/2025

(54) Title of the invention : CORE SLEEVE ARRANGEMENT FOR AN AXIAL FLUX MACHINE

(51) International classification	:H02K 3/30, H02K 9/19, H02K 21/24, H02K 1/14
(31) Priority Document No	:23166991.2
(32) Priority Date	:06/04/2023
(33) Name of priority country	:EPO
(86) International Application No	:PCT/EP2024/058435
Filing Date	:28/03/2024
(87) International Publication No	:WO 2024/208716
(61) Patent of Addition to Application Number	:NA
Filing Date	:NA
(62) Divisional to Application Number	:NA
Filing Date	:NA

(71)**Name of Applicant :**
1)MAGNAX
Address of Applicant :Evolis 100 8500 Kortrijk Belgium
(72)**Name of Inventor :**
1)LEIJNEN, Peter

(57) Abstract :
A stator (100) for an axial flux machine, comprising: - a plurality of stator members (200), each comprising a core sleeve (109) placed between the core (105) and the coil (106); - a housing encompassing the stator members (200), wherein for each of the stator members (200): - the core sleeve (109) at least partially extends between the top (111) and bottom wall (110), thereby defining a cavity (600, 700) in the housing, adapted to receive a cooling fluid flowing at the outside of the core sleeves (109); - at least some of the consecutive turns of the coil (106) are spaced apart, thereby defining fluid passages (602) towards the core sleeves (109), such that a cooling fluid under pressure supplied to the cavity (600, 700) causes a pressure difference between the outside and inside of each core sleeve (109), thereby pressing the core sleeves (109) against the respective cores (105).

No. of Pages : 20 No. of Claims : 13

(12) PATENT APPLICATION PUBLICATION
(21) Application No.202517095200 A
(19) INDIA
(22) Date of filing of Application :03/10/2025
(43) Publication Date : 14/11/2025

(54) Title of the invention : FRICTION CLUTCH

(51) International classification :F16D 13/38
(31) Priority Document No :10 2023 108 708.8
(32) Priority Date :05/04/2023
(33) Name of priority country :Germany
(86) International Application No :PCT/DE2024/100005
Filing Date :04/01/2024
(87) International Publication No :WO 2024/208385
(61) Patent of Addition to Application Number :NA
Filing Date :NA
(62) Divisional to Application Number :NA
Filing Date :NA

(71)**Name of Applicant :**
1)SCHAEFFLER TECHNOLOGIES AG & CO. KG
Address of Applicant :Industriestraße 1-3 91074 Herzogenaurach Germany
(72)**Name of Inventor :**
1)AHNERT, Gerd
2)OBITZ, Alexander
3)TAGUNOV, Dmitrij

(57) Abstract :
The invention relates to a friction clutch (1) comprising a housing (2), a counter-pressure plate (6) secured to the housing, a pressure plate (4) which can be moved to a limited extent in the axial direction (A) of the friction clutch (1), multiple actuating devices (5), a spring mechanism (15) and a clutch disc (3), wherein, in an engaged state of the friction clutch (1), the clutch disc (3) is frictionally clamped between the counter-pressure plate (6) and the pressure plate (4) by a force generated by the spring mechanism (15), wherein, in a disengaged state of the friction clutch (1), the pressure plate (4) is separated from the clutch disc (3) via the actuating devices (5) against the force generated by the spring mechanism (15), wherein each of the actuating devices (5) has a respective actuating lever (9) and an intermediate lever (10), wherein an outer end (11) of the actuating lever (9) in the radial direction (R) of the friction clutch (1) is rotatably secured to the housing (2) via an actuating bearing (16), wherein the intermediate lever (10) has a radially (R) outer first end (13) and a radially (R) inner second end (14), wherein the intermediate lever (10) is rotatably secured to the actuating lever (9) via an intermediate bearing (17), wherein the intermediate lever (10) acts on the pressure plate (4) at the first end (13) and is supported by the counter pressure plate (6) at the second end (14), and wherein a friction-reducing device (21) is arranged between the second end (14) of the intermediate lever (10) and the counter pressure plate (6).

No. of Pages : 12 No. of Claims : 10

(12) PATENT APPLICATION PUBLICATION
(21) Application No.202517096608 A
(19) INDIA
(22) Date of filing of Application :07/10/2025
(43) Publication Date : 14/11/2025

(54) Title of the invention : SHIFTING QUANTIZATION CENTER BY GRADIENT OF A RATE

(51) International classification	:H04N 19/126, H04N 19/146
(31) Priority Document No	:23305513.6
(32) Priority Date	:07/04/2023
(33) Name of priority country	:EPO
(86) International Application No	:PCT/EP2024/059287
Filing Date	:05/04/2024
(87) International Publication No	:WO 2024/209021
(61) Patent of Addition to Application Number	:NA
Filing Date	:NA
(62) Divisional to Application Number	:NA
Filing Date	:NA

(71)**Name of Applicant :**
1)INTERDIGITAL CE PATENT HOLDINGS, SAS
Address of Applicant :3 rue du Colonel Moll 75017 Paris France
(72)**Name of Inventor :**
1)BALCILAR, Muhammet
2)NASER, Karam
3)GALPIN, Franck
4)LE LEANNEC, Fabrice

(57) Abstract :
Systems, methods, and instrumentalities are configured for shifting a quantization center by a gradient of a rate. A video coding device (e.g., a video encoding and/or video decoding device) may obtain a quantization index. The device may shift the quantization index based on an amount that is inverse of the quantization index. The device may apply the shifted quantization index to a transform coefficient to generate an adjusted transform coefficient.

No. of Pages : 34 No. of Claims : 15

(12) PATENT APPLICATION PUBLICATION
(21) Application No.202517096609 A
(19) INDIA
(22) Date of filing of Application :07/10/2025
(43) Publication Date : 14/11/2025

(54) Title of the invention : SYSTEMS, DEVICES, AND METHODS FOR AUTOMATED ANALYSIS OF FLUID SAMPLES FROM A CELL PROCESSING SYSTEM

(51) International classification :G01N 35/00
(31) Priority Document No :63/465129
(32) Priority Date :09/05/2023
(33) Name of priority country :U.S.A.
(86) International Application No :PCT/US2024/025064
Filing Date :17/04/2024
(87) International Publication No :WO 2024/233080
(61) Patent of Addition to Application Number :NA
Filing Date :NA
(62) Divisional to Application Number :NA
Filing Date :NA

(71)**Name of Applicant :**
1)CELLARES CORPORATION
Address of Applicant :345 Allerton Avenue South San Francisco, California 94080 U.S.A.
(72)**Name of Inventor :**
1)CESAREK, John

(57) Abstract :
The present disclosure relates to systems, devices, and methods for automated analysis of fluid samples from a cell processing system. In an embodiment, the system comprises a fluid device docking station configured to receive a fluid device having a fluid sample therein, a master well plate, a sample well plate, a fluid transfer system configured to transfer the fluid sample from the fluid device to the master well plate, and transfer at least a portion of the fluid sample from the master well plate to the sample well plate, an analytical instrument configured to perform an assay on the fluid sample within the sample well plate, and a robot configured to move the sample well plate to the analytical instrument.

No. of Pages : 59 No. of Claims : 55

(12) PATENT APPLICATION PUBLICATION
(21) Application No.202517096611 A
(19) INDIA
(22) Date of filing of Application :07/10/2025
(43) Publication Date : 14/11/2025

(54) Title of the invention : METHODS AND SYSTEMS FOR CONTROLLING AND INTERACTING WITH OBJECTS BASED ON NON-SENSORY INFORMATION RENDERING

(51) International classification	:G06F 3/01, A61B 5/369, A61B 5/388, G06F 3/00
(31) Priority Document No	:18/134081
(32) Priority Date	:13/04/2023
(33) Name of priority country	:U.S.A.
(86) International Application No	:PCT/IB2024/053501
Filing Date	:10/04/2024
(87) International Publication No	:WO 2024/214020
(61) Patent of Addition to Application Number	:NA
Filing Date	:NA
(62) Divisional to Application Number	:NA
Filing Date	:NA

(71)**Name of Applicant :**
1)OFER, Moshe
Address of Applicant :22 Shmuel Hanagid St. 4729547 Ramat Hasharon Israel
(72)**Name of Inventor :**
1)OFER, Moshe

(57) Abstract :
A processing subsystem communicates with a region of an animal subject's brain that is responsible for forming concepts without sensory input. The processing subsystem receives brain signals that are representative of a concept formed by the region of the brain without sensory input. The processing subsystem processes the received brain signals to convert the concept to computer readable data that is representative of a tangible form of the concept. The processing subsystem identifies a data record that is associated with one or more data elements of the computer readable data and that is also associated with a real-world object that is related to the concept.

No. of Pages : 46 No. of Claims : 19

(12) PATENT APPLICATION PUBLICATION
(21) Application No.202517096615 A
(19) INDIA
(22) Date of filing of Application :07/10/2025
(43) Publication Date : 14/11/2025

(54) Title of the invention : PADDING OF NON-AVAILABLE INTRA SAMPLES IN BLOCK-VECTOR-BASED INTRA PREDICTION

(51) International classification	:H04N 19/105, H04N 19/182, H04N 19/593, H04N 19/82
(31) Priority Document No	:23305531.8
(32) Priority Date	:07/04/2023
(33) Name of priority country	:EPO
(86) International Application No	:PCT/EP2024/059295
Filing Date	:05/04/2024
(87) International Publication No	:WO 2024/209028
(61) Patent of Addition to Application Number	:NA
Filing Date	:NA
(62) Divisional to Application Number	:NA
Filing Date	:NA

(71)**Name of Applicant :**
1)INTERDIGITAL CE PATENT HOLDINGS, SAS
Address of Applicant :3 rue du Colonel Moll 75017 Paris France
(72)**Name of Inventor :**
1)NASER, Karam
2)ROBERT, Antoine
3)POIRIER, Tangi
4)GUERMOUD, Hassane

(57) Abstract :
Systems, methods, and instrumentalities are disclosed herein for video encoding and/or decoding using padding of non-available intra samples. In examples, a video decoder or video encoder may obtain, based on block-vector-based intra prediction, a prediction block of a current block in a current picture. The encoder or decoder may determine that the prediction block includes previously decoded samples and non-decoded samples. Based on determining that the prediction block includes the previously decoded samples and the non-decoded samples, the non-decoded samples may be padded using neighboring samples. The current block may be encoded or decoded based on the padded samples.

No. of Pages : 30 No. of Claims : 15

(12) PATENT APPLICATION PUBLICATION
(21) Application No.202517096618 A
(19) INDIA
(22) Date of filing of Application :07/10/2025
(43) Publication Date : 14/11/2025

(54) Title of the invention : DOUBLE ACTING DRUM BRAKE WITH BRAKE SHOE LINING ENGAGING WITH THE OUTER AND INNER DRUM SURFACE AT THE SAME TIME

(51) International classification	:F16D 53/00, F16D 65/22, F16D 125/64, F16D 121/04
(31) Priority Document No	:PUV 2023-40997
(32) Priority Date	:22/05/2023
(33) Name of priority country	:Czech Republic
(86) International Application No	:PCT/CZ2024/050019
Filing Date	:27/03/2024
(87) International Publication No	:WO 2024/240276
(61) Patent of Addition to Application Number	:NA
Filing Date	:NA
(62) Divisional to Application Number	:NA
Filing Date	:NA

(71)**Name of Applicant :**
1)KRISLO, Michal
Address of Applicant :Proutena 420 14900 Praha 4 - Ujezd u Pruhonic Czech Republic
(72)**Name of Inventor :**
1)KRISLO, Michal
2)KNOBLOCH, Rafael

(57) Abstract :
Double acting drum brake with brake shoe lining engaging simultaneously with the outer and inner surface of the drum (1) with two pairs of brake shoes having each inner brake shoe (3) with inner brake shoe lining (13) and outer brake shoe (2) with outer brake shoe lining (12) is wherein to each of both pairs of brake shoes is connected a set (4, 41) of levers in a mirroring way, each consisting of a first class one lever (14), whose pivot point (15) of the first class one lever is fixedly connected with a stationary part of braked device, and second class one lever (16), whose pivot point (17) of the second class one lever is also fixedly connected with a stationary part of braked device, wherein the end of the longer arm of the first class one lever (14) is using a sliding-pivoting hinge connected with the end of the longer arm of the second class one lever (16), wherein the first class one lever (14) is at its shorter arm using a first outer pin (18), located spaced from the pivot point (15) of the first class one lever, pivotally connected with the first end of outer brake shoe (2), and at the opposite side from the pivot point (15) of the first class one lever, then where the first outer pin (18) is, it is, using a first inner pin (19), pivotally connected with the first end of the inner brake shoe (3), wherein the second class one lever (16) is at its shorter arm using a second outer pin (20), located spaced from the pivot point (17) of the second class one lever, pivotally connected with the second end of outer brake shoe (2) and at the other side from the pivot point (17) of the second class one lever, then where the second outer pin (20) is, it is, using a second inner pin (21), pivotally connected to the other end of the inner brake shoes (3), wherein in the space between mutually mirroring arranged sets (4, 41) of levers, a brake cylinder (6) is arranged as fixedly connected with a stationary part of the braked device, which has two actuators (5) expandable in opposite directions, for expanding acting on the first class one lever (14) of each of both sets (4, 41) of levers always in the place between the first inner pin (19) and the end of the longer arm of the first class one lever (14), and wherein in the space between mutually mirroring arranged sets (4, 41) of levers is arranged a return spring (24) for mutual pulling the second class one levers (16) of both sets (4, 41) of levers, attached always in place between the second inner pin (20) and the end of the longer arm of the second first class lever (16).

No. of Pages : 9 No. of Claims : 5

(12) PATENT APPLICATION PUBLICATION
(21) Application No.202517097043 A
(19) INDIA
(22) Date of filing of Application :08/10/2025
(43) Publication Date : 14/11/2025

(54) Title of the invention : METHOD AND DEVICE FOR SEPARATING A SLIVER DURING CAN EXCHANGE ON A DRAWING FRAME

(51) International classification	:D01G 15/10, D01G 15/64, B65H 67/04
(31) Priority Document No	:10 2023 109 052.6
(32) Priority Date	:11/04/2023
(33) Name of priority country	:Germany
(86) International Application No	:PCT/EP2024/057020
Filing Date	:15/03/2024
(87) International Publication No	:WO 2024/213344
(61) Patent of Addition to Application Number	:NA
Filing Date	:NA
(62) Divisional to Application Number	:NA
Filing Date	:NA

(71)**Name of Applicant :**
1)TRÜTZSCHLER GROUP SE
Address of Applicant :Duvenstr. 82-92 41199 Mönchengladbach Germany
(72)**Name of Inventor :**
1)SCHMITZ, Jörg
2)LEINDERS, Christoph

(57) Abstract :
The invention relates to a method and to a drawing system for separating a single carded sliver (FB) during can exchange on a drawing frame (1), in which the sliver is produced in a carding machine (K) and runs continuously into the drawing system (1) which is arranged on the top side of the can changer (W) associated with the carding machine (K), wherein the sliver (FB) is guided vertically through a main drafting region of the drawing frame (1) to a hopper (14) and subsequently to a pair of pull-off rollers, which guide the sliver (FB) in a deposition tube (40) of a continuously rotating can plate (41) into a can, comprising the following steps: - reducing the rotation speed of the can plate (41) to a delivery speed of the sliver (FB) of 50 m/min to 300 m/min, - introducing compressed air into the hopper (14) for producing a suction effect on the sliver (FB), - producing a thin point in the sliver (FB) in the main drafting region of the drawing system, - forwarding the sliver (FB) with the thin point through the hopper (14) to which compressed air is applied and through the pull-off rollers into the (40) deposition tube of the can plate (41), - triggering the can exchange and thus separating the sliver (FB) as soon as the thin point of the sliver (FB) has reached the outlet of the rotating can plate (41), - introducing the sliver (FB) into the empty can and operating the carding machine with the drawing system and the can changer at production speed.

No. of Pages : 16 No. of Claims : 10

(12) PATENT APPLICATION PUBLICATION
(21) Application No.202517097060 A
(19) INDIA
(22) Date of filing of Application :08/10/2025
(43) Publication Date : 14/11/2025

(54) Title of the invention : GALACTOLIPASE DEFINED BY RATIO OF GALACTOLIPASE/PHOSPHOLIPASE AND/OR GALACTOLIPASE/LIPASE ACTIVITY AND ITS APPLICATION IN BAKERY

(51) International classification	:A21D 8/04, C12N 9/18
(31) Priority Document No	:BE2023/5272
(32) Priority Date	:11/04/2023
(33) Name of priority country	:Belgium
(86) International Application No	:PCT/EP2024/059770
Filing Date	:11/04/2024
(87) International Publication No	:WO 2024/213600
(61) Patent of Addition to Application Number	:NA
Filing Date	:NA
(62) Divisional to Application Number	:NA
Filing Date	:NA

(71)**Name of Applicant :**
1)PURATOS NV
Address of Applicant :Industrialaan 25 1702 GROOT-BIJGAARDEN Belgium
(72)**Name of Inventor :**
1)SHEGAY, Oksana
2)GUILLEMIN, Nicolas
3)ROULLING, Frédéric
4)VERTÉ, Fabienne
5)MOHAMMADI, Azadeh

(57) Abstract :
The present invention provides a polypeptide with galactolipase activity, characterized in that the ratio galactolipase activity versus phospholipase activity is 100.0 or higher and/or the ratio galactolipase activity versus lipase activity is 150.0 or higher. Also provided herein is an isolated nucleic acid encoding such polypeptide with galactolipase activity, an expression vector comprising such nucleic acid and a host cell comprising such nucleic acid or expression vector. Further provided herein is the use of said polypeptide with galactolipase activity as a food additive or in preparing a food product, and a method for preparing a food product using said polypeptide with galactolipase activity. Further provided herein is a dough product, batter product or bakery product obtained by a use or a method as described herein.

No. of Pages : 28 No. of Claims : 20

(12) PATENT APPLICATION PUBLICATION
(21) Application No.202517097072 A
(19) INDIA
(22) Date of filing of Application :08/10/2025
(43) Publication Date : 14/11/2025

(54) Title of the invention : WALL ELEMENTS, UNIT CONSTRUCTION SYSTEM AND METHOD

(51) International classification	:E04C 2/288, E04B 1/16, E04B 2/86, E04C 2/296, E04C 2/04
(31) Priority Document No	:LU103083
(32) Priority Date	:11/03/2023
(33) Name of priority country	:Luxembourg
(86) International Application No	:PCT/EP2024/056432
Filing Date	:11/03/2024
(87) International Publication No	:WO 2024/188968
(61) Patent of Addition to Application Number	:NA
Filing Date	:NA
(62) Divisional to Application Number	:NA
Filing Date	:NA

(71)**Name of Applicant :**
1)B.O. BASE ONE INDUSTRIES LIMITED
Address of Applicant :Arch. Makariou III, 73; METHONIS BUILDING, 3rd floor, Flat/Office 301 1070 Nicosia Cyprus
(72)**Name of Inventor :**
1)EL KHOURY, Charles Joseph

(57) Abstract :
Wall element (10), comprising an inner surface (20), an outer surface (30), studs (40) and at least one partial cavity (50) and/or cavity (60), wherein the studs are located between the inner surface and outer surface, and wherein the at least one partial cavity and/or cavity are also located between the inner surface and outer surface, and wherein the at least one partial cavity and/or cavity are designed to be filled with reinforced concrete, and wherein the cavity and/or the partial cavity span from the top (T) to the bottom (B) and/or from side to side of the wall element.

No. of Pages : 17 No. of Claims : 17

(12) PATENT APPLICATION PUBLICATION
(21) Application No.202517097084 A
(19) INDIA
(22) Date of filing of Application :08/10/2025
(43) Publication Date : 14/11/2025

(54) Title of the invention : INSULATING COATING FILM TREATMENT LIQUID FOR GRAIN-ORIENTED ELECTROMAGNETIC STEEL SHEET AND METHOD FOR PRODUCING GRAIN-ORIENTED ELECTROMAGNETIC STEEL SHEET

(51) International classification	:C23C 22/00, C21D 8/12, C21D 9/46, C22C 38/00, C22C 38/06
(31) Priority Document No	:2023-061084
(32) Priority Date	:05/04/2023
(33) Name of priority country	:Japan
(86) International Application No	:PCT/JP2024/014018
Filing Date	:05/04/2024
(87) International Publication No	:WO 2024/210188
(61) Patent of Addition to Application Number	:NA
Filing Date	:NA
(62) Divisional to Application Number	:NA
Filing Date	:NA

(71)**Name of Applicant :**
1)NIPPON STEEL CORPORATION
Address of Applicant :6-1, Marunouchi 2-chome, Chiyoda-ku, Tokyo 1008071 Japan
(72)**Name of Inventor :**
1)TAKATANI, Shinsuke
2)TAKEDA, Kazutoshi

(57) Abstract :
This method for producing an insulating coating film treatment liquid for a grain-oriented electromagnetic steel sheet includes: an adjustment step of adding a K compound to colloidal silica, and adjusting a K2O/SiO2 ratio in mass% between the K amount in terms of K2O in the colloidal silica and the Si amount in terms of SiO2 to 0.5% to 10%; and a mixing step of mixing the colloidal silica in which the K2O/SiO2 ratio has been adjusted, without adding a chromic acid salt, and a metal phosphate salt(s) of one or more metals selected from Al, Fe, Mg, Mn, Ni, Zn, Co, Mo, V, W, and Zr.

No. of Pages : 24 No. of Claims : 2

(12) PATENT APPLICATION PUBLICATION
(21) Application No.202517096131 A
(19) INDIA
(22) Date of filing of Application :06/10/2025
(43) Publication Date : 14/11/2025

(54) Title of the invention : NON-SEPARABLE TRANSFORMS FOR LOW DELAY APPLICATIONS

(51) International classification	:H04N 19/12, H04N 19/136, H04N 19/159, H04N 19/17, H04N 19/61
(31) Priority Document No	:23305508.6
(32) Priority Date	:06/04/2023
(33) Name of priority country	:EPO
(86) International Application No	:PCT/EP2024/057956
Filing Date	:25/03/2024
(87) International Publication No	:WO 2024/208638
(61) Patent of Addition to Application Number	:NA
Filing Date	:NA
(62) Divisional to Application Number	:NA
Filing Date	:NA

(71)**Name of Applicant :**
1)INTERDIGITAL CE PATENT HOLDINGS, SAS
Address of Applicant :3 rue du Colonel Moll 75017 Paris France
(72)**Name of Inventor :**
1)NASER, Karam
2)LE LEANNEC, Fabrice
3)BONNINEAU, Charles
4)PURI, Saurabh

(57) Abstract :
A method comprising : obtaining a current block of a picture; selecting a transform to be applied to the current block in a set of selectable transforms of a plurality of transforms comprising at least one non-separable transform, and, applying the selected transform to the current block; wherein a non-separable transform of the at least one non-separable transform is selectable for the current block based on a characteristic of a coding entity comprising the current block different from a sequence comprising the picture or a coding entity neighboring the current block.

No. of Pages : 33 No. of Claims : 16

(12) PATENT APPLICATION PUBLICATION
(21) Application No.202517096138 A
(19) INDIA
(22) Date of filing of Application :06/10/2025
(43) Publication Date : 14/11/2025

(54) Title of the invention : ALKOXYLATED NITROGEN CONTAINING POLYMERS AND THEIR USE

(51) International classification	:C08G 59/14, C08G 65/26, C11D 3/37
(31) Priority Document No	:23161587.3
(32) Priority Date	:13/03/2023
(33) Name of priority country	:EPO
(86) International Application No	:PCT/EP2024/055702
Filing Date	:05/03/2024
(87) International Publication No	:WO 2024/188713
(61) Patent of Addition to Application Number	:NA
Filing Date	:NA
(62) Divisional to Application Number	:NA
Filing Date	:NA

(71)**Name of Applicant :**
1)BASF SE
Address of Applicant :Carl-Bosch-Strasse 38 67056 Ludwigshafen am Rhein Germany
(72)**Name of Inventor :**
1)KLOPSCH, Rainer
2)HUEFFER, Stephan
3)GARCIA CASTRO, Ivette
4)MATT, Yannick
5)BEAN, Jessica Eleanor

(57) Abstract :
Alkoxylated nitrogen containing polymers, their preparation, intermediates, uses, and compositions comprising such polymers This invention deals with alkoxylated nitrogen containing polymer that are based on the polymerization of a di- or oligoamine together with a compound comprising at least two glycidyl ether groups, their manufacture, intermediates and uses, for example in laundry or dishwashing.

No. of Pages : 70 No. of Claims : 21

(12) PATENT APPLICATION PUBLICATION
(21) Application No.202517096141 A
(19) INDIA
(22) Date of filing of Application :06/10/2025
(43) Publication Date : 14/11/2025

(54) Title of the invention : AN ENGINE CONTROL SYSTEM

(51) International classification	:F02D 41/00, F02D 41/06, F02D 41/04, F02P 17/12, F02D 19/06
(31) Priority Document No	:2303550.4
(32) Priority Date	:10/03/2023
(33) Name of priority country	:U.K.
(86) International Application No	:PCT/GB2024/050628
Filing Date	:08/03/2024
(87) International Publication No	:WO 2024/189324
(61) Patent of Addition to Application Number	:NA
Filing Date	:NA
(62) Divisional to Application Number	:NA
Filing Date	:NA

(71)**Name of Applicant :**
1)JCB RESEARCH
Address of Applicant :Lakeside Works Rocester Uttoxeter Staffordshire ST14 5JP U.K.
(72)**Name of Inventor :**
1)PATEL, Divyesh
2)JEFFERY, Anthony

(57) Abstract :
P603287PC00 18 Abstract An engine start system for a hydrogen fuelled internal combustion engine, the system comprising a controller; at least one fuel ignition device in communication with the controller; and a hydrogen fuel delivery system in communication with the controller; wherein the system is configured such that upon receipt of an engine start command, the controller is configured to instruct sparking of the fuel ignition device without instructing the supply of fuel to commence and is configured to monitor an output of the fuel ignition device for a signal indicative of the generation of a spark. [Figure 1]

No. of Pages : 15 No. of Claims : 25

(12) PATENT APPLICATION PUBLICATION
(21) Application No.202517096142 A
(19) INDIA
(22) Date of filing of Application :06/10/2025
(43) Publication Date : 14/11/2025

(54) Title of the invention : RECYCLABLE STEERING WHEEL

(51) International classification	:B62D 1/06, B62D 1/04
(31) Priority Document No	:PCT/IB2023/052419
(32) Priority Date	:13/03/2023
(33) Name of priority country	:International Bureau of the World Intellectual
(86) International Application No	:PCT/IB2024/052084
Filing Date	:04/03/2024
(87) International Publication No	:WO 2024/189459
(61) Patent of Addition to Application Number	:NA
Filing Date	:NA
(62) Divisional to Application Number	:NA
Filing Date	:NA

(71)**Name of Applicant :**
1)SOFTCAR SA
Address of Applicant :Passage du Cardinal 1 1700 Fribourg Switzerland
(72)**Name of Inventor :**
1)CROZIER, Etienne
2)HEISEL, Guillaume
3)JACOT, Maurice
4)QUERRY, Hector
5)THULIEZ, Jean-Luc

(57) Abstract :
The invention relates to a steering wheel (01), for example for a motor vehicle, comprising a rigid frame (10), and a combination of thermoplastic injection-moulded trim parts arranged as a half-shell, advantageously put together by clipping and/or screwing, or by any other fastening means on said frame, the injection-moulded parts constituting the trim of said frame (10) and forming the design and grip of said steering wheel (01).

No. of Pages : 34 No. of Claims : 28

(12) PATENT APPLICATION PUBLICATION
(21) Application No.202517096148 A
(19) INDIA
(22) Date of filing of Application :06/10/2025
(43) Publication Date : 14/11/2025

(54) Title of the invention : SIDELINK POSITIONING REFERENCE SIGNAL RESOURCE RESERVATION INDICATION

(51) International classification	:H04L 5/00, G01S 5/00, H04W 72/25, H04L 27/26
(31) Priority Document No	:20230100443
(32) Priority Date	:02/06/2023
(33) Name of priority country	:Greece
(86) International Application No	:PCT/US2024/026512
Filing Date	:26/04/2024
(87) International Publication No	:WO 2024/248987
(61) Patent of Addition to Application Number	:NA
Filing Date	:NA
(62) Divisional to Application Number	:NA
Filing Date	:NA

(71)**Name of Applicant :**
1)QUALCOMM INCORPORATED
Address of Applicant :Attn: International IP Administration 5775 Morehouse Drive San Diego, California 92121-1714 U.S.A.
(72)**Name of Inventor :**
1)MANOLAKOS, Alexandros
2)SARKIS, Gabi

(57) Abstract :
A method of reserving a sidelink positioning reference signal resource includes transmitting, from a user equipment, a wireless sidelink message including a first slot of information comprising control information that indicates a second slot, to be transmitted after the first slot, and that includes a reservation indication of a particular sidelink positioning reference signal (SL PRS resource of the second slot from among a plurality of potential sidelink positioning reference signal resources configured in a dedicated SL PRS resource pool associated with the second slot, the reservation indication uniquely identifying, explicitly, implicitly, or a combination thereof, the particular sidelink positioning reference signal resource of the second slot from among the plurality of potential sidelink positioning reference signal resources of the second slot.

No. of Pages : 64 No. of Claims : 20

(12) PATENT APPLICATION PUBLICATION
(21) Application No.202517096191 A
(19) INDIA
(22) Date of filing of Application :06/10/2025
(43) Publication Date : 14/11/2025

(54) Title of the invention : SYSTEMS AND METHODS ASSOCIATED WITH REDUNDANT STEERING MODE AND SUSPENSION OF TRAFFIC DUPLICATION

(51) International classification	:H04W 76/15, H04W 88/06
(31) Priority Document No	:63/457667
(32) Priority Date	:06/04/2023
(33) Name of priority country	:U.S.A.
(86) International Application No	:PCT/US2024/023417
Filing Date	:05/04/2024
(87) International Publication No	:WO 2024/211815
(61) Patent of Addition to Application Number	:NA
Filing Date	:NA
(62) Divisional to Application Number	:NA
Filing Date	:NA

(71)**Name of Applicant :**
1)INTERDIGITAL PATENT HOLDINGS, INC.
Address of Applicant :200 Bellevue Parkway Suite 300 Wilmington, DE 19809 U.S.A.
(72)**Name of Inventor :**
1)DI GIROLAMO, Rocco
2)DE FOY, Xavier
3)PERRAS, Michelle
4)WANG, Guanzhou
5)AHMAD, Saad

(57) Abstract :
Disclosed herein are systems, methods and instrumentalities associated with the suspension of traffic duplication. A wireless transmit/receive unit (WTRU) may receive, from a first network node, configuration information regarding suspension of traffic duplication. The WTRU may further receive a request message from a second network node, wherein the request message may indicate a request to suspend traffic duplication. The WTRU may determine, based on the configuration information received from the first network node, the request message received from the second network node, and a condition at the WTRU, to suspend duplicating traffic, at least partially, in a first access leg of the WTRU. The WTRU may send a response message to the second network node, wherein the response message may indicate that traffic duplication is suspended (e.g., at least partially) in the first access leg.

No. of Pages : 42 No. of Claims : 20

(12) PATENT APPLICATION PUBLICATION
(19) INDIA
(22) Date of filing of Application :06/10/2025
(21) Application No.202517095967 A
(43) Publication Date : 14/11/2025

(54) Title of the invention : COMPOSITIONS COMPRISING 2,2,4-TRIMETHYL-N-PHENYL-1,2-DIHYDROQUINOLIN-6-AMINE

(51) International classification	:C08J 11/18, C08J 11/28, C08L 19/00, C10M 133/12, C10M 161/00
(31) Priority Document No	:63/489722
(32) Priority Date	:10/03/2023
(33) Name of priority country	:U.S.A.
(86) International Application No	:PCT/US2024/019142
Filing Date	:08/03/2024
(87) International Publication No	:WO 2024/191829
(61) Patent of Addition to Application Number	:NA
Filing Date	:NA
(62) Divisional to Application Number	:NA
Filing Date	:NA

(71)**Name of Applicant :**
1)FLEXSYS IP HOLDINGS, LLC
Address of Applicant :260 Springside Drive Akron, Ohio 44333 U.S.A.
(72)**Name of Inventor :**
1)AL-AFYOUNI, Malik Hani
2)CHAPELET, Judicael Jacques
3)FIELDS JR., Donald L.
4)IGNATZ-HOOVER, Frederick
5)PENNEY, Jonathan Michael
6)SMITH, Andrew Neil
7)TRIPLETT II, Ralph D.
8)TYHURST, Joshua
9)HAMBY, Taylor Blue

(57) Abstract :
The present disclosure provides compounds and compositions with antidegradant, e.g., antiozonant, antioxidant and/or antifatigue, properties that are useful additives for vulcanized rubber articles. In some embodiments, the compositions comprise 2,2,4-trimethyl-N-phenyl-1,2-dihydroquinolin-6-amine.

No. of Pages : 140 No. of Claims : 91

(12) PATENT APPLICATION PUBLICATION
(21) Application No.202517095971 A
(19) INDIA
(22) Date of filing of Application :06/10/2025
(43) Publication Date : 14/11/2025

(54) Title of the invention : METHOD FOR AUTOMATIC CUTTING A SHEET MATERIAL AND RELATIVE SYSTEM FOR AUTOMATIC CUTTING

(51) International classification	:B26D 5/00, B26F 1/38, G05B 19/18, D06H 7/00, G05B 19/418
(31) Priority Document No	:102023000006279
(32) Priority Date	:31/03/2023
(33) Name of priority country	:Italy
(86) International Application No	:PCT/IT2024/050063
Filing Date	:26/03/2024
(87) International Publication No	:WO 2024/201544
(61) Patent of Addition to Application Number	:NA
Filing Date	:NA
(62) Divisional to Application Number	:NA
Filing Date	:NA

(71)**Name of Applicant :**
1)MORGAN TECNICA S.P.A.
Address of Applicant :VIA SAN PANCRAZIO, 11/B 25030 ADRO Italy
(72)**Name of Inventor :**
1)GIACHETTI, Fabrizio

(57) Abstract :
Method and system (1) for automatically cutting of sheet material, the system comprising an automatic cutting machine (2) of sheet material, and a processing unit (7) having a memory unit (8), where the memory unit (8) contains a finite set of reference shapes (90), where the method comprises providing a set of current shapes (91) loaded by the processing unit (7), performing a comparison between each current shape with the reference shapes, determining at least one cutting parameter for each current shape as a function of the comparison, cutting each current shape with the at least one cutting parameter determined.

No. of Pages : 16 No. of Claims : 10

(12) PATENT APPLICATION PUBLICATION

(21) Application No.202517095976 A

(19) INDIA

(22) Date of filing of Application :06/10/2025

(43) Publication Date : 14/11/2025

(54) Title of the invention : INFORMATION PROCESSING DEVICE AND METHOD, AND PROGRAM

(51) International classification	:H04S 7/00, G10L 19/00
(31) Priority Document No	:63/499293
(32) Priority Date	:01/05/2023
(33) Name of priority country	:U.S.A.
(86) International Application No	:PCT/JP2023/028857
Filing Date	:08/08/2023
(87) International Publication No	:WO 2024/228269
(61) Patent of Addition to Application Number	:NA
Filing Date	:NA
(62) Divisional to Application Number	:NA
Filing Date	:NA

(71)**Name of Applicant :**

1)SONY GROUP CORPORATION

Address of Applicant :1-7-1, Konan, Minato-ku, Tokyo 1080075 Japan

(72)**Name of Inventor :**

1)TSUJI Minoru

(57) Abstract :

The present technology relates to an information processing device and method, and a program, that make it possible to share data between different spatial audio schemes. The information processing device comprises: an acquiring unit that acquires speaker layout information during playback of audio data in a first data format; and a position data generating unit which, on the basis of the speaker layout information, converts first position data of a sound source in a first data format or second position data of a sound source in a second data format having a rendering scheme during playback that is different from that of the first data format into second position data or first position data. The present technology can be applied to metadata converting devices.

No. of Pages : 75 No. of Claims : 18

(12) PATENT APPLICATION PUBLICATION
(21) Application No.202517095989 A
(19) INDIA
(22) Date of filing of Application :06/10/2025
(43) Publication Date : 14/11/2025

(54) Title of the invention : LIPID PARTICLE

(51) International classification	:A61K 47/36, A61K 9/14, A61K 31/711, A61K 31/713, A61K 31/7084
(31) Priority Document No	:2023-040536
(32) Priority Date	:15/03/2023
(33) Name of priority country	:Japan
(86) International Application No	:PCT/JP2024/009979
Filing Date	:14/03/2024
(87) International Publication No	:WO 2024/190865
(61) Patent of Addition to Application Number	:NA
Filing Date	:NA
(62) Divisional to Application Number	:NA
Filing Date	:NA

(71)**Name of Applicant :**
1)UNITED IMMUNITY, CO., LTD.
Address of Applicant :1-12-3, Nihonbashi-Muromachi, Chuo-ku, Tokyo 1030022 Japan
(72)**Name of Inventor :**
1)HARADA, Naozumi
2)INOUE, Tadashi
3)SOGA, Takatoshi
4)IGARASHI, Yuka

(57) Abstract :
To provide lipid particles that can be produced without relying on PEG-modified lipids, that are superior in medicinal effect, safety, or stability to lipid particles that rely on PEG-modified lipids, or that have different immunodynamics than lipid particles that rely on PEG-modified lipids. Provided is a lipid particle, wherein the lipid particle contains an ionized lipid, a phospholipid, and a sterol as lipids constituting the lipid particle and contains a modified polysaccharide that includes a hydrophobic group.

No. of Pages : 51 No. of Claims : 19

(12) PATENT APPLICATION PUBLICATION
(21) Application No.202517095990 A
(19) INDIA
(22) Date of filing of Application :06/10/2025
(43) Publication Date : 14/11/2025

(54) Title of the invention : NEW RADIO DENIAL-OF-SERVICE (DOS) ATTACK DEFENSE METHOD AND APPARATUS

(51) International classification :H04W 12/122
(31) Priority Document No :202310419217.5
(32) Priority Date :11/04/2023
(33) Name of priority country :China
(86) International Application No :PCT/CN2024/081501
Filing Date :13/03/2024
(87) International Publication No :WO 2024/212757
(61) Patent of Addition to Application Number :NA
Filing Date :NA
(62) Divisional to Application Number :NA
Filing Date :NA

(71)**Name of Applicant :**
1)ZTE CORPORATION
Address of Applicant :ZTE Plaza, Keji Road South, Hi-Tech Industrial Park, Nanshan District Shenzhen, Guangdong 518057 China
(72)**Name of Inventor :**
1)FENG, Chao
2)HE, Baomin

(57) Abstract :
The embodiments of the present disclosure provide a new radio denial-of-service (DoS) attack defense method and apparatus. The method comprises: in response to a new radio DoS attack initiated by a UE, positioning the UE which initiated the new radio DoS attack so as to obtain the position information of the UE; and according to the position information, adjusting the beam coverage area of a base station, so as to exclude from the beam coverage range the UE which initiated the new radio DoS attack.

No. of Pages : 22 No. of Claims : 14

(12) PATENT APPLICATION PUBLICATION
(21) Application No.202517096000 A
(19) INDIA
(22) Date of filing of Application :06/10/2025
(43) Publication Date : 14/11/2025

(54) Title of the invention : SAMPLE HOLDER SHUTTLE

(51) International classification :B01L 9/06
(31) Priority Document No :63/450209
(32) Priority Date :06/03/2023
(33) Name of priority country :U.S.A.
(86) International Application No :PCT/US2024/018632
Filing Date :06/03/2024
(87) International Publication No :WO 2024/186876
(61) Patent of Addition to Application Number :NA
Filing Date :NA
(62) Divisional to Application Number :NA
Filing Date :NA

(71)**Name of Applicant :**
1)COVARIS, LLC
Address of Applicant :14 Gill Street, Unit H Woburn, MA 01801-1721 U.S.A.
(72)**Name of Inventor :**
1)OGNIBENE, Edward
2)LAUGHARN, James A., Jr.
3)PROKOP, Paul
4)BRIGGS, Andrew
5)BASQUE, Todd Anthony

(57) Abstract :
A sample holder shuttle for holding a sample holders for laboratory processing, such as PCR thermal cycling, focused acoustic energy treatment and others. Sample holders can be received at openings of the shuttle such that a plurality of sample holders can be held by the shuttle and moved or otherwise manipulated simultaneously. A cover can engage with sample holders, e.g., to press the sample holders downwardly into contact with the shuttle.

No. of Pages : 16 No. of Claims : 28

(12) PATENT APPLICATION PUBLICATION
(21) Application No.202517095205 A
(19) INDIA
(22) Date of filing of Application :03/10/2025
(43) Publication Date : 14/11/2025

(54) Title of the invention : CALIBRATION OF ANTENNA ARRAYS USED FOR JOINT COMMUNICATIONS AND SENSING (JCAS)

(51) International classification	:H04B 17/12, G01S 1/02
(31) Priority Document No	:NA
(32) Priority Date	:NA
(33) Name of priority country	:NA
(86) International Application No	:PCT/SE2023/050195
Filing Date	:03/03/2023
(87) International Publication No	:WO 2024/186235
(61) Patent of Addition to Application Number	:NA
Filing Date	:NA
(62) Divisional to Application Number	:NA
Filing Date	:NA

(71)**Name of Applicant :**
1)TELEFONAKTIEBOLAGET LM ERICSSON (PUBL)
Address of Applicant :SE-164 83 Stockholm Sweden
(72)**Name of Inventor :**
1)MOLLÉN, Christopher
2)EQUI, Julia
3)BAIG, Mirza Uzair
4)FODOR, Gabor

(57) Abstract :
Embodiments include methods performed by a radio access network (RAN) node for calibration of an antenna array comprising a plurality of antenna elements. Such methods include, using a first portion of the antenna array, receiving calibration signals from one or more reference points at known locations relative to the antenna array. Such methods include, for each of the reference points, determining an angle of arrival (AoA) of the received calibration signals relative to an expected orientation of the antenna elements comprising the first portion and, based on the one or more determined AoAs and the known locations of the one or more reference points, determining an actual orientation of the antenna elements comprising the first portion. Other embodiments include RAN nodes configured to perform such methods.

No. of Pages : 32 No. of Claims : 26

(12) PATENT APPLICATION PUBLICATION
(21) Application No.202517095209 A
(19) INDIA
(22) Date of filing of Application :03/10/2025
(43) Publication Date : 14/11/2025

(54) Title of the invention : SECURE EXECUTION OF PROGRAMS

(51) International classification	:G06F 9/445, G06F 21/12, G06F 21/44, G06F 21/57, G06F 21/53
(31) Priority Document No	:23275038.0
(32) Priority Date	:03/03/2023
(33) Name of priority country	:EPO
(86) International Application No	:PCT/GB2024/050531
Filing Date	:27/02/2024
(87) International Publication No	:WO 2024/184618
(61) Patent of Addition to Application Number	:NA
Filing Date	:NA
(62) Divisional to Application Number	:NA
Filing Date	:NA

(71)**Name of Applicant :**
1)NCIPHER SECURITY LIMITED
Address of Applicant :1 Station Square Cambridge CB1 2GA U.K.
(72)**Name of Inventor :**
1)BAQER, Khaled

(57) Abstract :
A computer-implemented method comprising: obtaining configuration information for an isolated execution environment; obtaining a program; initialising an isolated execution environment based on the configuration information; and executing the program in the isolated execution environment.

No. of Pages : 43 No. of Claims : 15

(12) PATENT APPLICATION PUBLICATION
(21) Application No.202517095215 A
(19) INDIA
(22) Date of filing of Application :03/10/2025
(43) Publication Date : 14/11/2025

(54) Title of the invention : CRYSTALLINE FORMS OF AN ANTIVIRAL PRODRUG

(51) International classification	:A61P 31/18, C07D 498/14
(31) Priority Document No	:63/490999
(32) Priority Date	:17/03/2023
(33) Name of priority country	:U.S.A.
(86) International Application No	:PCT/US2024/019702
Filing Date	:13/03/2024
(87) International Publication No	:WO 2024/196661
(61) Patent of Addition to Application Number	:NA
Filing Date	:NA
(62) Divisional to Application Number	:NA
Filing Date	:NA

(71)**Name of Applicant :**
1)EXAVIR THERAPEUTICS, INC.
Address of Applicant :2 Embarcadero Center 09-119 San Francisco, CA 94111 U.S.A.
(72)**Name of Inventor :**
1)ELLIOTT, Gary, T.
2)KIM, Min-woo

(57) Abstract :
Disclosed herein, in part, are crystalline forms of a prodrug of an antiviral agent and methods of using the same in the treatment of viral infections.

No. of Pages : 39 No. of Claims : 32

(12) PATENT APPLICATION PUBLICATION
(21) Application No.202517095220 A
(19) INDIA
(22) Date of filing of Application :03/10/2025
(43) Publication Date : 14/11/2025

(54) Title of the invention : MOUNTING AID FOR POSITIONING A PROBE IN AN APPLICATION CAP

(51) International classification	:A61B 18/04, A61B 90/50, A61B 1/00
(31) Priority Document No	:10 2023 107 682.5
(32) Priority Date	:27/03/2023
(33) Name of priority country	:Germany
(86) International Application No	:PCT/EP2024/058366
Filing Date	:27/03/2024
(87) International Publication No	:WO 2024/200574
(61) Patent of Addition to Application Number	:NA
Filing Date	:NA
(62) Divisional to Application Number	:NA
Filing Date	:NA

(71)**Name of Applicant :**
1)OVESCO ENDOSCOPY AG
Address of Applicant :Friedrich-Miescher-Straße 9 72076 Tübingen Germany
(72)**Name of Inventor :**
1)SCHIMMELPFENNIG, Fabian
2)CONRAD, Gabor
3)HO, Chi-Nghia
4)SCHURR, Marc

(57) Abstract :
The present invention relates to a mounting aid (1) for attachment to an application cap (2) at an end of an endoscope (3), the mounting aid (1) being provided and designed to bring a probe (4) into a predetermined position inside the application cap (2) in order to fix the probe (4) in place in a defined position.

No. of Pages : 21 No. of Claims : 13

(12) PATENT APPLICATION PUBLICATION
(21) Application No.202517095222 A
(19) INDIA
(22) Date of filing of Application :03/10/2025
(43) Publication Date : 14/11/2025

(54) Title of the invention : DUCTILE POLYARYLETHERKETONE COMPOSITIONS

(51) International classification	:C08L 71/12, C08L 71/00
(31) Priority Document No	:FR2302243
(32) Priority Date	:10/03/2023
(33) Name of priority country	:France
(86) International Application No	:PCT/EP2024/056266
Filing Date	:08/03/2024
(87) International Publication No	:WO 2024/188897
(61) Patent of Addition to Application Number	:NA
Filing Date	:NA
(62) Divisional to Application Number	:NA
Filing Date	:NA

(71)**Name of Applicant :**
1)ARKEMA FRANCE
Address of Applicant :51 Esplanade du Général de Gaulle La Défense 92800 Puteaux France
(72)**Name of Inventor :**
1)PAUL, Clément
2)BRULE, Benoît
3)PASCAL, Jérôme

(57) Abstract :
The invention relates to granules consisting of a composition C comprising a non-delaminating polymer mixture M, the mixture M comprising: at least 50% by weight of at least one pseudo-amorphous or semi-crystalline polyaryletherketone, said polyaryletherketone having a melting temperature below or equal to 340°C, relative to the total weight of the mixture; and from 5% to 40% by weight of a poly(etherimide-siloxane) copolymer, relative to the total weight of the mixture, it being understood that if the mixture M comprises from 5% to 7.5% by weight of a poly(etherimide-siloxane) copolymer, then the mixture M does not comprise a polysiloxane. The invention also relates to the use of the composition C for the manufacture of an article, of a part, or of a coating, at a maximum manufacturing temperature not exceeding 350°C.

No. of Pages : 35 No. of Claims : 28

(12) PATENT APPLICATION PUBLICATION
(21) Application No.202517095247 A
(19) INDIA
(22) Date of filing of Application :03/10/2025
(43) Publication Date : 14/11/2025

(54) Title of the invention : ENGAGEMENT OF MICROSURGICAL ROBOTIC SYSTEM

(51) International classification	:A61B 34/00, A61B 90/00, A61F 9/007
(31) Priority Document No	:63/454420
(32) Priority Date	:24/03/2023
(33) Name of priority country	:U.S.A.
(86) International Application No	:PCT/IB2024/052760
Filing Date	:22/03/2024
(87) International Publication No	:WO 2024/201236
(61) Patent of Addition to Application Number	:NA
Filing Date	:NA
(62) Divisional to Application Number	:NA
Filing Date	:NA

(71)**Name of Applicant :**
1)FORSIGHT ROBOTICS LTD.
Address of Applicant :1 Ha'tsmicha Street 2069205 Yokneam Illit Israel
(72)**Name of Inventor :**
1)NATHAN, Joseph
2)GOLAN, Yoav
3)VAKNIN, Oshri
4)DALIOT, Amit

(57) Abstract :
Apparatus and methods are described for performing a procedure on a portion of a body of a patient using a surgical tool (21). A computer processor (28) drives a display (24) to show an image of the surgical tool (21) and the portion of the patient's body. In response to a control- component tool (32) being at least partially aligned with the surgical tool (21) within the image upon the display (24), the computer processor (28) engages the control-component tool (32) with the surgical tool (21), such that the tip of the surgical tool (21) is moved within the patient's eye in a manner that corresponds with movement of the location and orientation of the tip of the control-component tool (32). Other applications are also described.

No. of Pages : 47 No. of Claims : 83

(12) PATENT APPLICATION PUBLICATION
(21) Application No.202517096621 A
(19) INDIA
(22) Date of filing of Application :07/10/2025
(43) Publication Date : 14/11/2025

(54) Title of the invention : MOST PROBABLE MODES LIST

(51) International classification	:H04N 19/105, H04N 19/11, H04N 19/176, H04N 19/593, H04N 19/70
(31) Priority Document No	:23305512.8
(32) Priority Date	:07/04/2023
(33) Name of priority country	:EPO
(86) International Application No	:PCT/EP2024/057933
Filing Date	:25/03/2024
(87) International Publication No	:WO 2024/208633
(61) Patent of Addition to Application Number	:NA
Filing Date	:NA
(62) Divisional to Application Number	:NA
Filing Date	:NA

(71)**Name of Applicant :**
1)INTERDIGITAL CE PATENT HOLDINGS, SAS
Address of Applicant :3 rue du Colonel Moll 75017 Paris France
(72)**Name of Inventor :**
1)REUZE, Kevin
2)NASER, Karam
3)CHEN, Ya
4)DUMAS, Thierry

(57) Abstract :
Systems, devices, and methods are described herein for generating and reordering of a most probable mode list for intra prediction. For example, a device for video decoding and/or video encoding may determine an intra prediction mode associated with a neighboring block, e.g., based on a template- based intra mode derivation (TIMD) and/or a decoder side intra mode derivation (DIMD). The device may determine whether the intra prediction mode associated with the neighboring block is the same as a candidate mode on a most probable mode (MPM) list. Based on a determination that the intra prediction mode is the same as the candidate mode, the device may adjust a weight associated with the candidate mode. Based on the adjusted weight associated with the candidate mode, the device may reorder the MPM list based. The device may encode/decode the current block based on the MPM list.

No. of Pages : 33 No. of Claims : 17

(12) PATENT APPLICATION PUBLICATION
(21) Application No.202517096622 A
(19) INDIA
(22) Date of filing of Application :07/10/2025
(43) Publication Date : 14/11/2025

(54) Title of the invention : SHELL STRUCTURE, DISPLAY MODULE, AND ELECTRONIC DEVICE

(51) International classification :H05K 5/02
(31) Priority Document No :202310278159.9
(32) Priority Date :15/03/2023
(33) Name of priority country :China
(86) International Application No :PCT/CN2023/132665
Filing Date :20/11/2023
(87) International Publication No :WO 2024/187810
(61) Patent of Addition to Application Number :NA
Filing Date :NA
(62) Divisional to Application Number :NA
Filing Date :NA

(71)**Name of Applicant :**
1)HONOR DEVICE CO., LTD.
Address of Applicant :Suite 3401, Unit A, Building 6, Shum Yip Sky Park, No. 8089, Hongli West Road, Xiangmihu Street, Futian District Shenzhen, Guangdong 518040 China
(72)**Name of Inventor :**
1)MIAO, Dengkui
2)XU, Wenbin
3)WANG, Wei
4)LAI, Shunqi

(57) Abstract :
The embodiments of the present application relate to the technical field of electronic devices. Provided are a shell structure, a display module, and an electronic device. The shell structure can improve the scratch resistance of cover plate glass, and when the shell structure is applied to a 3D curved display panel, there is no color difference in the appearance of a 3D curved display area, such that the electronic device has a better appearance. The shell structure comprises a substrate and a scratch-resistant layer, which is located on one side of the substrate, wherein the scratch-resistant layer comprises at least two materials, which comprise at least one high-refractive-index material and at least one low-refractive-index material; and the thickness of the scratch-resistant layer is greater than or equal to 300 nm and is less than or equal to 5000 nm. The refractive index of the low-refractive-index material is less than or equal to the refractive index of the substrate, and the refractive index of the high-refractive-index material is greater than 1.6.

No. of Pages : 32 No. of Claims : 24

(12) PATENT APPLICATION PUBLICATION
(21) Application No.202517096623 A
(19) INDIA
(22) Date of filing of Application :07/10/2025
(43) Publication Date : 14/11/2025

(54) Title of the invention : INFORMATION PROCESSING METHOD AND APPARATUS

(51) International classification	:H04W 28/02
(31) Priority Document No	:202310365217.1
(32) Priority Date	:31/03/2023
(33) Name of priority country	:China
(86) International Application No	:PCT/CN2023/137429
Filing Date	:08/12/2023
(87) International Publication No	:WO 2024/198498
(61) Patent of Addition to Application Number	:NA
Filing Date	:NA
(62) Divisional to Application Number	:NA
Filing Date	:NA

(71)**Name of Applicant :**
1)HONOR DEVICE CO., LTD.
Address of Applicant :Suite 3401, Unit A, Building 6, Shum Yip Sky Park, No.8089, Hongli West Road, Xiangmihu Street, Futian District, Shenzhen, Guangdong 518040 China
(72)**Name of Inventor :**
1)ZHANG, Mingzhu

(57) Abstract :
Embodiments of the present application provide an information processing method and apparatus. The method comprises: generating or transmitting a first report, wherein the first report comprises the latest first uplink data volume and/or comprises the latest first residual delay of uplink data. According to the present application, by configuring that a first report comprises a first uplink data volume and/or a first residual delay of uplink data in the latest state, it can be ensured that even if uplink data is discarded, the first report comprises related information of uplink data after discarding, thereby avoiding waste of resources caused by the first report comprising a redundant buffer data volume or residual delay after discarding of uplink data.

No. of Pages : 53 No. of Claims : 24

(12) PATENT APPLICATION PUBLICATION
(21) Application No.202517096626 A
(19) INDIA
(22) Date of filing of Application :07/10/2025
(43) Publication Date : 14/11/2025

(54) Title of the invention : FLUID FLOW MANAGEMENT CONTROL AND LEAK DETECTION AND CONSERVATION SYSTEM AND VALVE ASSEMBLY

(51) International classification	:F16K 5/02, F16K 37/00
(31) Priority Document No	:18/181902
(32) Priority Date	:10/03/2023
(33) Name of priority country	:U.S.A.
(86) International Application No	:PCT/US2024/017987
Filing Date	:01/03/2024
(87) International Publication No	:WO 2024/191614
(61) Patent of Addition to Application Number	:NA
Filing Date	:NA
(62) Divisional to Application Number	:NA
Filing Date	:NA

(71)**Name of Applicant :**
1)MINTON, JR., Millard M.
Address of Applicant :812 Stonebridge Drive Wilkesboro, North Carolina 28697 U.S.A.
(72)**Name of Inventor :**
1)MINTON, JR., Millard M.

(57) Abstract :
A valve assembly for a fluid flow management control and leak detection and conservation system, the valve assembly is positioned within a valve well and includes a cam block, valve liner, valve body, spring, shaft, and cover. The cam block, valve liner, and valve body each include a plurality of projections for cooperating with each other to allow rotation of the valve body while preventing rotation of the valve liner. The valve body and valve liner each include opposing pairs of openings for opening and closing the valve assembly. The valve assembly when in an open position allows fluid to flow through the openings of the valve body and valve liner and when closed the sidewall of the valve body presses firmly against the sidewall of the valve liner to form a seal therebetween ceasing all fluid flow.

No. of Pages : 23 No. of Claims : 20

(12) PATENT APPLICATION PUBLICATION
(21) Application No.202517097086 A
(19) INDIA
(22) Date of filing of Application :08/10/2025
(43) Publication Date : 14/11/2025

(54) Title of the invention : POWER STORAGE DEVICE AND METHOD FOR MANUFACTURING SAME

(51) International classification	:H01M 50/184, H01G 2/10, H01G 9/08, H01G 11/78, H01M 10/04
(31) Priority Document No	:2023-054426
(32) Priority Date	:29/03/2023
(33) Name of priority country	:Japan
(86) International Application No	:PCT/JP2024/013388
Filing Date	:29/03/2024
(87) International Publication No	:WO 2024/204835
(61) Patent of Addition to Application Number	:NA
Filing Date	:NA
(62) Divisional to Application Number	:NA
Filing Date	:NA

(71)**Name of Applicant :**
1)DAI NIPPON PRINTING CO., LTD.
Address of Applicant :1-1, Ichigaya Kagacho 1-chome, Shinjuku-ku, Tokyo 1628001 Japan
(72)**Name of Inventor :**
1)MIYASHIRO, Kae
2)URIU, Toshibumi
3)KANAZAWA, Sayako
4)SASAKI, Miho

(57) Abstract :
This power storage device is provided with an electrode body, an exterior film, a seal part, and a seal reinforcement part. The exterior film wraps the electrode body so as to form an opening and has a first seal region. A lid body is disposed in the opening and has a second seal region facing the first seal region. The seal part is formed between the first seal region and the second seal region, and at least partially seals a portion between the first seal region and the second seal region. The seal reinforcement part reinforces sealing by the seal part.

No. of Pages : 51 No. of Claims : 10

(12) PATENT APPLICATION PUBLICATION
(21) Application No.202517097087 A
(19) INDIA
(22) Date of filing of Application :08/10/2025
(43) Publication Date : 14/11/2025

(54) Title of the invention : INSULATION COATING TREATMENT LIQUID FOR GRAIN-ORIENTED ELECTRICAL STEEL SHEET, METHOD FOR PRODUCING SAME, AND METHOD FOR PRODUCING GRAIN-ORIENTED ELECTRICAL STEEL SHEET

(51) International classification	:C23C 22/00, C21D 8/12, C21D 9/46, C22C 38/00, C22C 38/06
(31) Priority Document No	:2023-061085
(32) Priority Date	:05/04/2023
(33) Name of priority country	:Japan
(86) International Application No	:PCT/JP2024/014019
Filing Date	:05/04/2024
(87) International Publication No	:WO 2024/210189
(61) Patent of Addition to Application Number	:NA
Filing Date	:NA
(62) Divisional to Application Number	:NA
Filing Date	:NA

(71)**Name of Applicant :**
1)NIPPON STEEL CORPORATION
Address of Applicant :6-1, Marunouchi 2-chome, Chiyoda-ku, Tokyo 1008071 Japan
(72)**Name of Inventor :**
1)TAKATANI, Shinsuke
2)TAKEDA, Kazutoshi
3)SHIBAYAMA, Atsushi

(57) Abstract :
This insulating film processing liquid for grain-oriented electrical steel sheets contains colloidal silica and a phosphoric acid metal salt of at least one metal selected from K, Al, Fe, Mg, Mn, Ni, Zn, Co, Mo, V, W, and Zr. In the insulating film processing liquid, the K2O/SiO2 ratio of the K amount expressed as K2O and the Si amount expressed as SiO2 is 0.5-10% in mass%.

No. of Pages : 24 No. of Claims : 3

(12) PATENT APPLICATION PUBLICATION
(21) Application No.202517097088 A
(19) INDIA
(22) Date of filing of Application :08/10/2025
(43) Publication Date : 14/11/2025

(54) Title of the invention : SYSTEMS AND METHODS FOR OBTAINING NITROGEN AND CARBON DIOXIDE FROM A FLUE GAS

(51) International classification	:F23J 15/00, B01D 53/56, B01D 53/22, C01B 32/50, B01D 53/75
(31) Priority Document No	:63/492999
(32) Priority Date	:29/03/2023
(33) Name of priority country	:U.S.A.
(86) International Application No	:PCT/US2024/021979
Filing Date	:28/03/2024
(87) International Publication No	:WO 2024/206637
(61) Patent of Addition to Application Number	:NA
Filing Date	:NA
(62) Divisional to Application Number	:NA
Filing Date	:NA

(71)**Name of Applicant :**
1)AMERICAN AG ENERGY, INC.
Address of Applicant :10 Fawcett Street 3rd Floor Cambridge, Massachusetts 02138 U.S.A.
(72)**Name of Inventor :**
1)CHOI, Allison
2)STROHM, Adam
3)ROSEN, Richard
4)LIM, Wei Han

(57) Abstract :
Provided are systems and methods for obtaining nitrogen and carbon dioxide gases from a flue gas. A method according to some embodiments comprises receiving a flue gas at an inlet of a selective catalytic reduction system, wherein the flue gas comprises one or more NOx gases; reducing the one or more NOx gases to N2 gas in the selective catalytic reduction system; receiving an output gas from the selective catalytic reduction system at an inlet of a gas separation membrane; and separating the output gas into a retentate and a permeate using the gas separation membrane, wherein the retentate comprises N2 gas.

No. of Pages : 17 No. of Claims : 29

(12) PATENT APPLICATION PUBLICATION
(21) Application No.202517097109 A
(19) INDIA
(22) Date of filing of Application :08/10/2025
(43) Publication Date : 14/11/2025

(54) Title of the invention : COMBINATION OF ANTIBODIES, OR ANTIGEN-BINDING FRAGMENTS THEREOF, FOR THE TREATMENT OF CANCER AND COMPOSITION THEREOF

(51) International classification	:C07K 16/18, C07K 16/28, A61K 39/00, A61P 35/02, A61P 35/00
(31) Priority Document No	:23305391.7
(32) Priority Date	:23/03/2023
(33) Name of priority country	:EPO
(86) International Application No	:PCT/EP2024/057865
Filing Date	:22/03/2024
(87) International Publication No	:WO 2024/194490
(61) Patent of Addition to Application Number	:NA
Filing Date	:NA
(62) Divisional to Application Number	:NA
Filing Date	:NA

(71)**Name of Applicant :**
1)XENOTHERA
Address of Applicant :21 rue de la Noue Bras de Fer 44200 NANTES France
(72)**Name of Inventor :**
1)BASSISSI, Firas
2)CIRON, Carine
3)DUVAUX, Odile
4)VANHOVE, Bernard

(57) Abstract :
The present invention relates to a combination of antibodies, or antigen-binding fragments thereof, for use in the treatment of a cancer in a human subject in need thereof, the combination comprising at least a first antibody, or an antigen-binding fragment thereof, at least a second antibody, or an antigen-binding fragment thereof, and at least a third antibody, or an antigen-binding fragment thereof, each of these antibodies independently and specifically binding to an antigen selected from the group consisting of SLC3A2, CKAP4, Annexin A2, GSTO1, Annexin A5, MX1, RTN4, FASN and PDIA4. The present invention further relates to a pharmaceutical composition for use in the treatment of a cancer in a human subject in need thereof comprising this combination of antibodies, or antigen-binding fragments thereof and a pharmaceutically acceptable carrier.

No. of Pages : 69 No. of Claims : 13

(12) PATENT APPLICATION PUBLICATION
(21) Application No.202517097131 A
(19) INDIA
(22) Date of filing of Application :08/10/2025
(43) Publication Date : 14/11/2025

(54) Title of the invention : WATER-POWERED GENERATOR

(51) International classification	:F03B 13/26, F03G 3/00
(31) Priority Document No	:2303521.5
(32) Priority Date	:10/03/2023
(33) Name of priority country	:U.K.
(86) International Application No	:PCT/GB2024/050512
Filing Date	:26/02/2024
(87) International Publication No	:WO 2024/189308
(61) Patent of Addition to Application Number	:NA
Filing Date	:NA
(62) Divisional to Application Number	:NA
Filing Date	:NA

(71)**Name of Applicant :**
1)PRESTON, William Maxwell
Address of Applicant :2 St Ayles Crescent Anstruther Fife KY10 3HE U.K.
(72)**Name of Inventor :**
1)PRESTON, William Maxwell

(57) Abstract :
A water-powered generator is disclosed comprising: a turbine; a water tank, fillable with water, and arranged for relative movement with respect to the turbine; at least one activator tank coupled to the water tank and/or turbine via an activator arm; and a locking system configured for selective holding of the at least one activator tank at a height above ground. The locking system is configured for selective release to cause the at least one activator tank to drop due to gravity, which, in turn, causes relative movement between the water tank and the turbine, in order to force water in the water tank through the turbine to cause rotation of the turbine.

No. of Pages : 19 No. of Claims : 25

(12) PATENT APPLICATION PUBLICATION
(21) Application No.202517095053 A
(19) INDIA
(22) Date of filing of Application :03/10/2025
(43) Publication Date : 14/11/2025

(54) Title of the invention : SINTERED ORE PRODUCTION METHOD

(51) International classification :C22B 1/20
(31) Priority Document No :NA
(32) Priority Date :NA
(33) Name of priority country :NA
(86) International Application No :PCT/JP2023/013751
Filing Date :03/04/2023
(87) International Publication No :WO 2024/209499
(61) Patent of Addition to Application Number :NA
Filing Date :NA
(62) Divisional to Application Number :NA
Filing Date :NA

(71)**Name of Applicant :**
1)NIPPON STEEL CORPORATION
Address of Applicant :6-1, Marunouchi 2-chome, Chiyoda-ku, Tokyo 1008071 Japan
(72)**Name of Inventor :**
1)KATAYAMA Kazuaki
2)MATSUMURA Masaru
3)YABE Hideaki

(57) Abstract :
This sintered ore production method comprises: a step for forming a lower-stage raw-material-filled layer (10) by charging a lower-stage blended granular raw material into a sintering machine (100); a step for forming an upper-stage raw-material-filled layer(20) by charging an upper-stage blended granular raw material on the lower-stage raw-material-filled layer; a step for igniting the surface of the lower-stage raw-material-filled layer and the surface of the upper-stage raw-material-filled layer, respectively, and introducing an oxygen-containing gas into the lower-stage raw-material-filled layer and the upper-stage raw-material-filled layer through downward-suctioning (6) under atmospheric pressure. At least a portion of the gas suctioned downward from the surface side of the upper-stage raw-material-filled layer after the completion of ignition of the upper-stage raw-material-filled layer is made to be an oxygen-enriched gas with an oxygen concentration of 26 vol% to 46 vol%. A region in which the oxygen-enriched gas is supplied is a region including a part of a first half section, when in the longitudinal direction of the sintering machine, a middle position of a section from immediately after an outlet (X) of an upper-stage ignition furnace (2C) to an ore discharge end (Y) is defined as a middle position (Z), and a section from immediately after the outlet (X) of the upper-stage ignition furnace to the middle position (Z) is defined as the first half section.

No. of Pages : 27 No. of Claims : 7

(12) PATENT APPLICATION PUBLICATION
(21) Application No.202517095054 A
(19) INDIA
(22) Date of filing of Application :03/10/2025
(43) Publication Date : 14/11/2025

(54) Title of the invention : METHOD, FACILITY MANAGEMENT DEVICE, AND PROGRAM

(51) International classification :H04Q 9/00
(31) Priority Document No :2023-059591
(32) Priority Date :31/03/2023
(33) Name of priority country :Japan
(86) International Application No :PCT/JP2024/011926
Filing Date :26/03/2024
(87) International Publication No :WO 2024/204185
(61) Patent of Addition to Application Number :NA
Filing Date :NA
(62) Divisional to Application Number :NA
Filing Date :NA

(71)**Name of Applicant :**
1)DAIKIN INDUSTRIES, LTD.
Address of Applicant :Osaka Umeda Twin Towers South, 1-13-1, Umeda, Kita-ku, Osaka-Shi, Osaka 5300001 Japan
(72)**Name of Inventor :**
1)KOBAYASHI, Hiroki
2)MAEDA, Chikara

(57) Abstract :
In the present disclosure, a model data point on the user interface side and a device data point on the facility equipment side are automatically associated with each other. The present disclosure provides a method by which a facility management device for managing facility equipment associates a model data point for holding data used in an application for monitoring and controlling the facility equipment with a device data point for holding data to be input or output from the facility equipment installed in a property, wherein the model data point and the device data point are associated with each other by a control unit on the basis of identification information assigned to the model data point and the device data point.

No. of Pages : 59 No. of Claims : 12

(12) PATENT APPLICATION PUBLICATION
(21) Application No.202517095055 A
(19) INDIA
(22) Date of filing of Application :03/10/2025
(43) Publication Date : 14/11/2025

(54) Title of the invention : METHOD OF TREATING PACKED BED CONTAINED IN CYNLINDRICAL VESSEL

(51) International classification :C21B 5/00
(31) Priority Document No :2023-073877
(32) Priority Date :27/04/2023
(33) Name of priority country :Japan
(86) International Application No :PCT/JP2024/012485
Filing Date :27/03/2024
(87) International Publication No :WO 2024/224927
(61) Patent of Addition to Application Number :NA
Filing Date :NA
(62) Divisional to Application Number :NA
Filing Date :NA

(71)**Name of Applicant :**
1)JFE STEEL CORPORATION
Address of Applicant :2-3, Uchisaiwai-cho 2-chome, Chiyoda-ku, Tokyo 1000011 Japan
(72)**Name of Inventor :**
1)SAWAKI Naomi
2)UCHIDA Seiji
3)HARADA Hiroki
4)MATSUTANI Kohei

(57) Abstract :
To provide a method for treating a filling layer housed in a cylindrical container with which it is possible to secure gas flow uniformity in the circumferential direction in the cylindrical container. In this method for treating a filling layer housed in a cylindrical container, a step for supplying a second gas into the cylindrical container from n nozzles on the cylindrical container side part while generating a first gas that rises in the cylindrical container by supplying a gas from a supply port on the lower part of the cylindrical container is performed under a condition that a gas flow uniformity index D represented by the formula (1) is 0.60 or above. Here, V1: flow rate of the first gas, V2: total flow rate of the second gas supplied from n nozzles, DC: inside diameter of the cylindrical container at the nozzle height position, z: projection length of the nozzle from the inner circumferential surface of the cylindrical container, DN: horizontal length of the nozzle port.

No. of Pages : 24 No. of Claims : 6

(12) PATENT APPLICATION PUBLICATION
(21) Application No.202517095058 A
(19) INDIA
(22) Date of filing of Application :03/10/2025
(43) Publication Date : 14/11/2025

(54) Title of the invention : CLUTCH CONTROL DEVICE

(51) International classification	:F16D 25/12, F16D 48/02
(31) Priority Document No	:NA
(32) Priority Date	:NA
(33) Name of priority country	:NA
(86) International Application No	:PCT/JP2023/012867
Filing Date	:29/03/2023
(87) International Publication No	:WO 2024/201801
(61) Patent of Addition to Application Number	:NA
Filing Date	:NA
(62) Divisional to Application Number	:NA
Filing Date	:NA

(71)**Name of Applicant :**
1)HONDA MOTOR CO., LTD.
Address of Applicant :2-3, Toranomon 2-chome, Minato-ku, Tokyo 1058404 Japan
(72)**Name of Inventor :**
1)ONO Junya
2)ITO Asuka
3)ISHII Daichi
4)RYUZAKI Tatsuya
5)KAIBE Yuma
6)YOSHIDA Masahiro
7)TSUZUKI Ryohei

(57) Abstract :
This clutch control device (40A) comprises a clutch device (26), a clutch actuator (50), and a control unit (40). The control unit (40) has an automatic control mode (M1) in which the clutch device (26) is automatically operated by driving the clutch actuator (50) and a manual control mode (M2) in which the clutch device (26) is manually operated by an operation input to a clutch operator (4b) operated by a driver. In accordance with the wear state of the clutch device (26), the control unit (40) shifts to a forced manual control mode in which only the manual control mode (M2) can be selected.

No. of Pages : 48 No. of Claims : 8

(12) PATENT APPLICATION PUBLICATION
(21) Application No.202517096224 A
(19) INDIA
(22) Date of filing of Application :07/10/2025
(43) Publication Date : 14/11/2025

(54) Title of the invention : HUMAN COMPLEMENT COMPONENT 2 BINDING MOLECULES

(51) International classification	:C07K 16/18, G01N 33/564, A61K 39/395, A61P 7/00
(31) Priority Document No	:63/488825
(32) Priority Date	:07/03/2023
(33) Name of priority country	:U.S.A.
(86) International Application No	:PCT/US2024/018604
Filing Date	:06/03/2024
(87) International Publication No	:WO 2024/186861
(61) Patent of Addition to Application Number	:NA
Filing Date	:NA
(62) Divisional to Application Number	:NA
Filing Date	:NA

(71)**Name of Applicant :**
1)THE CLEVELAND CLINIC FOUNDATION
Address of Applicant :9500 Euclid Avenue Cleveland, Ohio 44195 U.S.A.
(72)**Name of Inventor :**
1)LIN, Feng

(57) Abstract :
Provided herein are human complement component 2 (C2) binding molecules and nucleic acid sequences encoding such molecules. In particular embodiments, provided herein are human C2 binding molecules (e.g., nanobodies) having a first, and optionally a second, single monomeric variable antibody domain (SMVAD) that comprises certain CDRs, and methods for using such molecules to treat complement-related diseases (e.g., dysregulated complement activation diseases). In certain embodiments, the SMVAD comprises camelid, human, or humanized framework regions.

No. of Pages : 32 No. of Claims : 33

(12) PATENT APPLICATION PUBLICATION
(21) Application No.202517096287 A
(19) INDIA
(22) Date of filing of Application :07/10/2025
(43) Publication Date : 14/11/2025

(54) Title of the invention : ARTICULATED TRICYCLE WITH ANTI-ROLLOVER SYSTEM

(51) International classification	:B62K 5/02, B62K 5/027, B62K 5/06, B62K 5/10
(31) Priority Document No	:P202330338
(32) Priority Date	:28/04/2023
(33) Name of priority country	:Spain
(86) International Application No	:PCT/ES2024/070260
Filing Date	:26/04/2024
(87) International Publication No	:WO 2024/223973
(61) Patent of Addition to Application Number	:NA
Filing Date	:NA
(62) Divisional to Application Number	:NA
Filing Date	:NA

(71)**Name of Applicant :**
1)GENIUS EMOBILITY SYSTEM SL
Address of Applicant :ENRIQUE LARRETA, 5, BAJO DCHA 28036 Madrid Spain
(72)**Name of Inventor :**
1)CARRASCO VERGARA, Pablo

(57) Abstract :
The invention relates to an articulated tricycle with a simple and economic anti-rollover system, formed by: a front chassis, where the driver is located, with a single wheel at the front of the vehicle that is controlled by handlebars; and a rear chassis, with two rear wheels that define the single direction forward travel thereof. According to the invention, both chassis are connected by a pivot hinge that forms a substantially upward angle (a) above the direction of forward travel, the hinge therefore allowing the driver to tilt together with the front chassis when the vehicle takes a bend but forcing the rear chassis to yaw towards the inside of the bend, thereby providing same with anti-rollover stability, since, when the rear part swerves towards the inside of a bend, the front wheel has to lean more towards the outside, increasing the radial distance between supports, the ability to tilt being prevented upon braking.

No. of Pages : 10 No. of Claims : 5

(12) PATENT APPLICATION PUBLICATION
(21) Application No.202517096382 A
(19) INDIA
(22) Date of filing of Application :07/10/2025
(43) Publication Date : 14/11/2025

(54) Title of the invention : METHOD FOR AUTOMATICALLY MAPPING THE RADIATION IN A PORTION OF A BUILDING AND A ROBOT VEHICLE

(51) International classification	:G01T 7/00, G01T 1/169
(31) Priority Document No	:NA
(32) Priority Date	:NA
(33) Name of priority country	:NA
(86) International Application No	:PCT/EP2023/060171
Filing Date	:19/04/2023
(87) International Publication No	:WO 2024/217680
(61) Patent of Addition to Application Number	:NA
Filing Date	:NA
(62) Divisional to Application Number	:NA
Filing Date	:NA

(71)**Name of Applicant :**
1)FRAMATOME GMBH
Address of Applicant :Paul-Gossen-Strasse 100 91052 ERLANGEN Germany
(72)**Name of Inventor :**
1)KOHN, Sebastian
2)SOMMER, Oliver
3)WEBER, Adele
4)MUHAMAD ALI, Naeel
5)QUERFURTH, Frank

(57) Abstract :
The invention relates to a method for automatically mapping the radiation in a portion of a building (7) and/or of a portion of a transport object using a robot vehicle (1), the portion of the building and/or of the transport object comprising a plurality of surfaces (9, 10), the method comprising: acquiring (1010) a 3D map (42) of a portion of a building (7) and/or of a portion of a transport object, wherein the 3D map (42) comprises a plurality of segments (44), each representing a surface (9, 10) of the building and/or of the transport object; applying to each segment a plurality sectors forming a grid of sectors, each sector having a border; physically marking, by the robot vehicle, at least a portion of the border of each sector (46) with paint on the corresponding surface (9, 10); and mapping the radiation for one or more sectors (46), by scanning, by the robot vehicle, with a radiation sensor (28) each sector of the one or more sectors, to measure the radioactive radiation within that sector, wherein the method further comprises: rendering at least one 3D image based on at least one portion of the 3D Map; sending the at least one rendered 3D image to at least one screen (62, 66) of a virtual reality system being arranged remotely from the robot vehicle; detecting commands from a commanding device (64) of the virtual reality system (60); transmitting the commands to the robot vehicle; and operating the robot vehicle in response to the commands.

No. of Pages : 20 No. of Claims : 30

(12) PATENT APPLICATION PUBLICATION
(21) Application No.202517096384 A
(19) INDIA
(22) Date of filing of Application :07/10/2025
(43) Publication Date : 14/11/2025

(54) Title of the invention : CATHODE ACTIVE MATERIAL HAVING SPINEL STRUCTURE

(51) International classification	:C01G 53/00, H01M 4/505, H01M 4/525
(31) Priority Document No	:23168969.6
(32) Priority Date	:20/04/2023
(33) Name of priority country	:EPO
(86) International Application No	:PCT/EP2024/060682
Filing Date	:19/04/2024
(87) International Publication No	:WO 2024/218282
(61) Patent of Addition to Application Number	:NA
Filing Date	:NA
(62) Divisional to Application Number	:NA
Filing Date	:NA

(71)**Name of Applicant :**
1)TOPSOE BATTERY MATERIALS A/S
Address of Applicant :Haldor Topsøes Allé 1 2800 Kongens Lyngby Denmark
(72)**Name of Inventor :**
1)HØJBERG, Jonathan
2)ELKJÆR, Christian Fink
3)HØJ, Jacob Weiland
4)DAHL, Søren

(57) Abstract :
The present invention relates to a cathode active material comprising: (a) first crystal particles, wherein the first crystal particles have a spinel structure and are of the formula LixNiyMn3-x-y-zDzO4, wherein 0.95 = x =1.05; and 0.45 = y = 0.50, and 0 = z = 0.20, and wherein D is a dopant selected from B, N, F, Mg, Al, Nb, Si, P, La, S, Ca, Ti, Cr, Fe, Co, Cu, Zn, Zr, Mo, Sn, W and mixtures thereof, and the first crystal particles have a particle size of no greater than 3 µm measured as the arithmetic mean value of the minimum Feret diameter of the particles measured using scanning electron microscopy, (b) second crystal particles, wherein the second crystal particles comprise material having a spinel structure and which is of the formula Lix'Niy'Mn3-x'-y'-z'D'z'O4, wherein: 0.95 = x' = 1.05; 0.43 = y' = 0.47, and 0 = z'= 0.20, and wherein D' is a dopant selected from B, N, F, Mg, Al, Nb, Si, P, La, S, Ca, Ti, Cr, Fe, Co, Cu, Zn, Zr, Mo, Sn, W and mixtures thereof, and the second crystal particles have an average particle size of at least 3 times that of the average particle size of the first crystal particles, measured as the arithmetic mean value of the minimum Feret diameter of the particles measured using scanning electron microscopy.

No. of Pages : 31 No. of Claims : 22

(12) PATENT APPLICATION PUBLICATION
(21) Application No.202517096629 A
(19) INDIA
(22) Date of filing of Application :07/10/2025
(43) Publication Date : 14/11/2025

(54) Title of the invention : ISOLATED BISPECIFIC ANTIBODY THAT SPECIFICALLY BINDS TO CD3 AND TUMOR ANTIGEN, AND USE THEREOF

(51) International classification	:C07K 16/28, C07K 16/30, C07K 16/46, C12N 15/13, C12N 15/63
(31) Priority Document No	:2023105614
(32) Priority Date	:10/03/2023
(33) Name of priority country	:Russia
(86) International Application No	:PCT/RU2024/050053
Filing Date	:07/03/2024
(87) International Publication No	:WO 2024/191322
(61) Patent of Addition to Application Number	:NA
Filing Date	:NA
(62) Divisional to Application Number	:NA
Filing Date	:NA

(71)**Name of Applicant :**
1)JOINT STOCK COMPANY "BIOCAD"
Address of Applicant :vn. ter. g. poselok Strelna, ul. Svyazi, d. 38, str. 1, pomeshch. 89 Saint Petersburg, 198515 Russia
(72)**Name of Inventor :**
1)BELIASNIKOVA, Alina Valerevna
2)FILINA, Valentina Yurevna
3)IVANOVA, Anastasiya Andreevna
4)KYTMANOVA, Olga Leonidovna
5)LEGOTSKII, Sergei Aleksandrovich
6)KRAT, Sergei Mikhailovich
7)MOROZOV, Dmitry Valentinovich

(57) Abstract :
The present invention relates to the field of biotechnology and medicine, in particular to a bispecific antibody that specifically binds to CD3 and a tumor antigen. The invention further relates to a nucleic acid encoding the subject bispecific antibody, an expression vector, a host cell for producing the subject bispecific antibody and a method for producing said cell, pharmaceutical compositions comprising the bispecific antibody according to the invention, pharmaceutical compositions comprising the bispecific antibody according to the invention and other therapeutically active compounds, methods for treating diseases or disorders mediated by a tumor antigen, use of the bispecific antibody or pharmaceutical compositions thereof for treating diseases or disorders mediated by a tumor antigen, and the use of the bispecific antibody according to the invention and other therapeutically active compounds for treating diseases or disorders mediated by a tumor antigen.

No. of Pages : 164 No. of Claims : 78

(12) PATENT APPLICATION PUBLICATION
(21) Application No.202517096631 A
(19) INDIA
(22) Date of filing of Application :07/10/2025
(43) Publication Date : 14/11/2025

(54) Title of the invention : TILED COLLIMATOR ARRAY

(51) International classification	:G02B 6/26, G02B 6/32, G02B 6/293, H01S 3/067
(31) Priority Document No	:301657
(32) Priority Date	:26/03/2023
(33) Name of priority country	:Israel
(86) International Application No	:PCT/IL2024/050310
Filing Date	:26/03/2024
(87) International Publication No	:WO 2024/201459
(61) Patent of Addition to Application Number	:NA
Filing Date	:NA
(62) Divisional to Application Number	:NA
Filing Date	:NA

(71)**Name of Applicant :**
1)ELBIT SYSTEMS ELECTRO-OPTICS - ELOP LTD.
Address of Applicant :5 HaMada st. 7670305 Rehovot Israel
(72)**Name of Inventor :**
1)TURM, Asaf
2)SCHIFEER, Zeev
3)BRACHA, Leeron Hanan
4)WORMSER, Daniel
5)COHEN, Rina

(57) Abstract :
A tiled collimator array is disclosed. The tiled collimator array includes, a plurality of endcaps each being connected to an optical fiber at a back end, wherein the endcaps are selected from hexagonal endcaps and quadrangular endcaps; and an adhesive gluing the endcaps to each other, wherein the endcaps are stacked together in a compacted structure.

No. of Pages : 10 No. of Claims : 12

(12) PATENT APPLICATION PUBLICATION
(21) Application No.202517096636 A
(19) INDIA
(22) Date of filing of Application :07/10/2025
(43) Publication Date : 14/11/2025

(54) Title of the invention : PROVISIONING UE POLICY WHEN A UE IS ATTACHED IN AN EVOLVED PACKET SYSTEM

(51) International classification	:H04W 48/18, H04W 40/02, H04W 28/08, H04W 40/24
(31) Priority Document No	:20230100908
(32) Priority Date	:02/11/2023
(33) Name of priority country	:Greece
(86) International Application No	:PCT/EP2023/084393
Filing Date	:05/12/2023
(87) International Publication No	:WO 2024/183941
(61) Patent of Addition to Application Number	:NA
Filing Date	:NA
(62) Divisional to Application Number	:NA
Filing Date	:NA

(71)**Name of Applicant :**
1)LENOVO (SINGAPORE) PTE. LTD.
Address of Applicant :151, Lorong Chuan #02-01 New Tech Park Singapore 556741 Singapore
(72)**Name of Inventor :**
1)KARAMPATSIS, Dimitrios
2)ATARIUS, Roozbeh

(57) Abstract :
Various aspects of the present disclosure relate to a first network function in a first mobile communication network, the first mobile communication network supporting connectivity in an Evolved Packet System (EPS) access that has an active policy association for a UE with a second network function, the first network function comprising: at least one memory; and at least one processor coupled with the at least one memory. The processor is configured to cause the first network function to: receive a first request comprising an active policy association request including a UE Policy Container; determine to trigger a UE Policy Delivery to the UE the determination based on the UE Policy Container received in the first request; and trigger a PDN-GW Bearer Modification without QoS update by sending a second request to a second network function wherein the second request is an Update Bearer Request that includes the UE Policy Container within a Protocol Configuration.

No. of Pages : 33 No. of Claims : 20

(12) PATENT APPLICATION PUBLICATION
(21) Application No.202517096641 A
(19) INDIA
(22) Date of filing of Application :07/10/2025
(43) Publication Date : 14/11/2025

(54) Title of the invention : INTRA BLOCK COPY AND INTRA TEMPLATE MATCHING PREDICTION FILTERING

(51) International classification	:H04N 19/593, H04N 19/117, H04N 19/105, H04N 19/147, H04N 19/176
(31) Priority Document No	:23305530.0
(32) Priority Date	:07/04/2023
(33) Name of priority country	:EPO
(86) International Application No	:PCT/EP2024/059297
Filing Date	:05/04/2024
(87) International Publication No	:WO 2024/209030
(61) Patent of Addition to Application Number	:NA
Filing Date	:NA
(62) Divisional to Application Number	:NA
Filing Date	:NA

(71)**Name of Applicant :**
1)INTERDIGITAL CE PATENT HOLDINGS, SAS
Address of Applicant :3 rue du Colonel Moll 75017 Paris France
(72)**Name of Inventor :**
1)NASER, Karam
2)LE LEANNEC, Fabrice
3)ROBERT, Antoine
4)RATH, Gagan Bihari

(57) Abstract :
Systems, methods, and instrumentalities are disclosed herein for video encoding and/or decoding using intra block copy (IBC) and/or intra template matching prediction (intraTMP) filtering. In examples, a video decoder or video encoder may determine that a current block is coded in IBC mode. Based on the current block being coded in the intra block copy mode, filter parameters may be determined based on template samples of a prediction block and template samples of the current block. Samples of the prediction block may be filtered based on the determined filter parameters. The current block may be encoded or decoded based on the filtered samples.

No. of Pages : 33 No. of Claims : 18

(12) PATENT APPLICATION PUBLICATION
(21) Application No.202517096655 A
(19) INDIA
(22) Date of filing of Application :07/10/2025
(43) Publication Date : 14/11/2025

(54) Title of the invention : METHODS FOR DETERMINING THE BENEFITS AND RISKS IN HEALTHCARE APPLICATIONS

(51) International classification	:G06Q 10/0635, G16H 50/50, G06Q 50/00
(31) Priority Document No	:63/461562
(32) Priority Date	:24/04/2023
(33) Name of priority country	:U.S.A.
(86) International Application No	:PCT/US2024/025797
Filing Date	:23/04/2024
(87) International Publication No	:WO 2024/226479
(61) Patent of Addition to Application Number	:NA
Filing Date	:NA
(62) Divisional to Application Number	:NA
Filing Date	:NA

(71)**Name of Applicant :**
1)MATT, Richard George
Address of Applicant :34333 Tangueray Drive Grayslake, Illinois 60030 U.S.A.
(72)**Name of Inventor :**
1)MATT, Richard George

(57) Abstract :
Disclosed herein are novel methods and systems for defining, determining, and/or calculating or quantifying the benefits of one or more healthcare actions (e.g., products and/or services such as, for instance, medical devices and/or medical procedures). In particular, the application relates to methods and systems for determining (e.g., calculating and/or quantifying) whether the benefit of a healthcare action exceeds the benefit. In at least one example, the calculation of one or more benefits is achieved via the same scale used to calculate risks.

No. of Pages : 94 No. of Claims : 23

(12) PATENT APPLICATION PUBLICATION
(21) Application No.202517096002 A
(19) INDIA
(22) Date of filing of Application :06/10/2025
(43) Publication Date : 14/11/2025

(54) Title of the invention : PELLET PRODUCTION METHOD

(51) International classification	:C22B 1/14, C22B 1/16
(31) Priority Document No	:2023-049704
(32) Priority Date	:27/03/2023
(33) Name of priority country	:Japan
(86) International Application No	:PCT/JP2024/003639
Filing Date	:05/02/2024
(87) International Publication No	:WO 2024/202534
(61) Patent of Addition to Application Number	:NA
Filing Date	:NA
(62) Divisional to Application Number	:NA
Filing Date	:NA

(71)**Name of Applicant :**
1)JFE STEEL CORPORATION
Address of Applicant :2-3, Uchisaiwai-cho 2-chome, Chiyoda-ku, Tokyo 1000011 Japan
(72)**Name of Inventor :**
1)NAKAMURA Naoto
2)TAKEHARA Kenta
3)HORITA Kenya
4)FUJIWARA Shohei
5)IWAMI Yuji
6)HIGUCHI Takahide

(57) Abstract :
Proposed is a pellet production method with which bursting can be more effectively suppressed with respect to pellets that are produced by a granulation step for granulating a starting material by adding water thereto and a baking step for baking the granulated material. The present invention provides a pellet production method which comprises: a granulation step in which water is added to a starting material obtained by compounding a powdery substance containing iron ore having an iron content of 63 mass% or less and an auxiliary starting material, and the resulting mixture is granulated; and a baking step for baking the thus-obtained granulated material, the baking step including a drying/preheating zone and a subsequent baking zone. Before the baking step, the specific surface area and true density of the starting material and the amount of water added in the granulation step are measured, the proper values of the drying temperature and the gas flow velocity in the drying/preheating zone in the baking step are estimated using the measured values, and the processing in the drying/preheating zone in the baking step is performed using the estimated proper values of the drying temperature and the gas flow velocity.

No. of Pages : 19 No. of Claims : 2

(12) PATENT APPLICATION PUBLICATION
(21) Application No.202517096004 A
(19) INDIA
(22) Date of filing of Application :06/10/2025
(43) Publication Date : 14/11/2025

(54) Title of the invention : INLET NOZZLE FOR FANS

(51) International classification	:F04D 27/00, F04D 29/02, F04D 29/42, F04D 29/44
(31) Priority Document No	:10 2023 001 453.2
(32) Priority Date	:06/04/2023
(33) Name of priority country	:Germany
(86) International Application No	:PCT/EP2024/058677
Filing Date	:28/03/2024
(87) International Publication No	:WO 2024/208749
(61) Patent of Addition to Application Number	:NA
Filing Date	:NA
(62) Divisional to Application Number	:NA
Filing Date	:NA

(71)**Name of Applicant :**
1)ZIEHL-ABEGG SE
Address of Applicant :Heinz-Ziehl-Straße 74653 Künzelsau Germany
(72)**Name of Inventor :**
1)BULLINGER, Dennis
2)GÖLLER, Matthias
3)REHRAUER, Jürgen

(57) Abstract :
The inlet nozzle for fans has a securing part (1) and an annular wall (3) connected to it, on which at least one protruding pressure connection (18) is provided. In order to be able to provide the pressure connection (18) in a more simple and reliable manner and at low cost, it is formed as a single piece with the inlet nozzle. In this way, additional assembly steps for attaching the pressure connection (18) can be avoided. The pressure connection (18) is provided directly during the manufacturing of the inlet nozzle. This avoids manufacturing and assembly costs as well as possible rejects due to the assembly process. No assembly devices are required, which would lead to increased costs of manufacturing the inlet nozzle. Given that the pressure connection (18) is part of the inlet nozzle, no additional storage locations need to be provided for the pressure connections (18).

No. of Pages : 8 No. of Claims : 8

(12) PATENT APPLICATION PUBLICATION
(21) Application No.202517096006 A
(19) INDIA
(22) Date of filing of Application :06/10/2025
(43) Publication Date : 14/11/2025

(54) Title of the invention : DISCOVERY AND SELECTION OF LOCATED WTRU PER TARGET WTRU'S STATUS

(51) International classification :H04W 64/00
(31) Priority Document No :63/457565
(32) Priority Date :06/04/2023
(33) Name of priority country :U.S.A.
(86) International Application No :PCT/US2024/023440
Filing Date :05/04/2024
(87) International Publication No :WO 2024/211832
(61) Patent of Addition to Application Number :NA
Filing Date :NA
(62) Divisional to Application Number :NA
Filing Date :NA

(71)**Name of Applicant :**
1)INTERDIGITAL PATENT HOLDINGS, INC.
Address of Applicant :200 Bellevue Parkway Suite 300 Wilmington, DE 19809 U.S.A.
(72)**Name of Inventor :**
1)SON, Jung, Je
2)SETHI, Anuj
3)ABBAS, Taimoor
4)BRUSILOVSKY, Alec
5)HASEGAWA, Fumihiro
6)DENG, Tao
7)HOANG, Tuong

(57) Abstract :
A first wireless transmit/receive unit (WTRU) may be used to provide an SL. positioning service. The first WTRU may comprise a processor. A solicitation message may be received from a second WTRU. The solicitation message may indicate a status of a second WTRU and may indicate service information associated with an SL positioning service, It may be determined that the first WTRU is capable of providing the SL positioning service based on the status of the second WTRU and the service information. A response message may be sent to the second WTRU when the first WTRU is capable of providing the SL positioning service.

No. of Pages : 34 No. of Claims : 20

(12) PATENT APPLICATION PUBLICATION
(21) Application No.202517096021 A
(19) INDIA
(22) Date of filing of Application :06/10/2025
(43) Publication Date : 14/11/2025

(54) Title of the invention : WEIGHTED PLANAR AND DC MODES FOR INTRA PREDICTION

(51) International classification	:H04N 19/593, H04N 19/11, H04N 19/119, H04N 19/159, H04N 19/186
(31) Priority Document No	:23305506.0
(32) Priority Date	:06/04/2023
(33) Name of priority country	:EPO
(86) International Application No	:PCT/EP2024/057958
Filing Date	:25/03/2024
(87) International Publication No	:WO 2024/208639
(61) Patent of Addition to Application Number	:NA
Filing Date	:NA
(62) Divisional to Application Number	:NA
Filing Date	:NA

(71)**Name of Applicant :**
1)INTERDIGITAL CE PATENT HOLDINGS, SAS
Address of Applicant :3 rue du Colonel Moll 75017 Paris France
(72)**Name of Inventor :**
1)RATH, Gagan Bihari
2)CHEN, Ya
3)LE LEANNEC, Fabrice
4)ROBERT, Antoine

(57) Abstract :
In one implementation, we propose to improve the PLANAR and DC prediction modes by introducing weights, for example, proportional to the sides of the block. The planar mode prediction is obtained by a weighted combination of the horizontal and vertical interpolations. Similarly, the DC value in the DC prediction mode is obtained as a weighted combination of the DC values computed from the top and the left reference arrays of a target block. When the target block is flat because of a high width to height ratio, or tall because of a high height to width ratio, the proposed methods are expected to produce better predictions than the equal weighted versions.

No. of Pages : 19 No. of Claims : 21

(12) PATENT APPLICATION PUBLICATION
(21) Application No.202517095250 A
(19) INDIA
(22) Date of filing of Application :03/10/2025
(43) Publication Date : 14/11/2025

(54) Title of the invention : TAMPER EVIDENT CLOSURE

(51) International classification :B65D 50/04
(31) Priority Document No :63/456269
(32) Priority Date :31/03/2023
(33) Name of priority country :U.S.A.
(86) International Application No :PCT/EP2024/058763
Filing Date :29/03/2024
(87) International Publication No :WO 2024/200812
(61) Patent of Addition to Application Number :NA
Filing Date :NA
(62) Divisional to Application Number :NA
Filing Date :NA

(71)**Name of Applicant :**
1)BERRY GLOBAL, INC.
Address of Applicant :101 Oakley Street Evansville, Indiana 47710 U.S.A.
(72)**Name of Inventor :**
1)GIFT, Steven
2)BOND, Frank

(57) Abstract :
A child-resistant closure, comprising: an inner shell and an outer shell; wherein the inner shell includes at least one inner lug; wherein the outer shell includes at least one outer lug; wherein the outer lug is movable relative to the inner lug between an engaged position and a disengaged position; wherein in the disengaged position the outer lug is able to rotate past the inner lug when rotated in an opening direction; wherein in the engaged position the outer lug engages the inner lug when rotated in an opening direction to cause opening direction rotation of the inner shell; and an annular band disposed on the inner shell between an inner shell top panel and a shelf; wherein the shelf is disposed axially lower than the top panel; wherein the at least one inner lug extends upwardly from the shelf.

No. of Pages : 14 No. of Claims : 28

(12) PATENT APPLICATION PUBLICATION
(21) Application No.202517095255 A
(19) INDIA
(22) Date of filing of Application :03/10/2025
(43) Publication Date : 14/11/2025

(54) Title of the invention : METHOD FOR OPERATING A COMPUTING UNIT IN A SECURE OPERATING MODE

(51) International classification	:G06F 11/10, G06F 11/28
(31) Priority Document No	:10 2023 203 238.4
(32) Priority Date	:06/04/2023
(33) Name of priority country	:Germany
(86) International Application No	:PCT/EP2024/058838
Filing Date	:02/04/2024
(87) International Publication No	:WO 2024/208780
(61) Patent of Addition to Application Number	:NA
Filing Date	:NA
(62) Divisional to Application Number	:NA
Filing Date	:NA

(71)**Name of Applicant :**
1)ROBERT BOSCH GMBH
Address of Applicant :Postfach 30 02 20 70442 Stuttgart Germany
(72)**Name of Inventor :**
1)THOSS, Dieter

(57) Abstract :
The invention relates to a method for operating a computing unit in a secure operating mode, comprising: reading in an activation command (208) for activating a secure operating mode; activating the secure operating mode in response to the read-in activation command; in the secure operating mode, reading in commands and calculating a current test value from a command currently being executed and a previous test value; and in the secure operating mode, checking the current test value at least once.

No. of Pages : 21 No. of Claims : 12

(12) PATENT APPLICATION PUBLICATION
(21) Application No.202517095256 A
(19) INDIA
(22) Date of filing of Application :03/10/2025
(43) Publication Date : 14/11/2025

(54) Title of the invention : AIR HOSE CONNECTOR

(51) International classification	:F16L 37/10, B64D 13/06, B64F 1/36, F16L 37/12
(31) Priority Document No	:2305318.4
(32) Priority Date	:12/04/2023
(33) Name of priority country	:U.K.
(86) International Application No	:PCT/US2024/023301
Filing Date	:05/04/2024
(87) International Publication No	:WO 2024/215572
(61) Patent of Addition to Application Number	:NA
Filing Date	:NA
(62) Divisional to Application Number	:NA
Filing Date	:NA

(71)**Name of Applicant :**
1)ILLINOIS TOOL WORKS INC.
Address of Applicant :155 Harlem Avenue Glenview, IL 60025 U.S.A.
(72)**Name of Inventor :**
1)NIELSEN, Bo, Vork
2)SCHRØDER, Lars

(57) Abstract :
An air hose connector (10) for an air hose. The air hose connector has a first end (12) that is configured for direct or indirect connection to a pre-conditioned air hose, a second open end (14) that is configured for connection to an aircraft, and a handle (30) that is operably connected to the air hose connector. The handle includes a locking member (34), which is adjacent to said first end of said connector, and a grip portion (32), which is adjacent to said second end of said connector. The handle is configured to move the locking member between a first, locked, configuration and a second, unlocked, configuration. The handle comprises a remote control unit (36) that is configured to remotely control a function of a component of an air hose system.

No. of Pages : 24 No. of Claims : 15

(12) PATENT APPLICATION PUBLICATION
(21) Application No.202517095257 A
(19) INDIA
(22) Date of filing of Application :03/10/2025
(43) Publication Date : 14/11/2025

(54) Title of the invention : PROCESSING A PRIMARY PRODUCT INTO A SECONDARY PRODUCT

(51) International classification	:G06Q 10/10, G06Q 50/04
(31) Priority Document No	:23161600.4
(32) Priority Date	:13/03/2023
(33) Name of priority country	:EPO
(86) International Application No	:PCT/EP2024/056575
Filing Date	:12/03/2024
(87) International Publication No	:WO 2024/189036
(61) Patent of Addition to Application Number	:NA
Filing Date	:NA
(62) Divisional to Application Number	:NA
Filing Date	:NA

(71)**Name of Applicant :**
1)BASF SE
Address of Applicant :Carl-Bosch-Strasse 38 67056 Ludwigshafen am Rhein Germany
(72)**Name of Inventor :**
1)RUDOLPH, Hans
2)HARTMANN, Michael
3)WINDELER, Ingo
4)PACK, Robert
5)WINKLER, Christian-Andreas

(57) Abstract :
A method (100) for processing a primary product (A) into a secondary product (C), including the steps: providing (S15) at least one distinguishable quantity of a primary product (A); providing (S11) at least one a data structure (4') associated with the distinguishable quantity of a primary product (A), said data structure (4') including one data item (5) holding an object identifier indic- ative of the distinguishable quantity of the primary product (A); processing (S19) the at least one primary product (A) into a distinguishable quantity of a secondary product (C) by a processing device (11); generating (S28) an unique object identifier indicative of said obtained distinguisha- ble quantity; generating (S29) a new data structure (4) having at least one data item (5) holding the generated object identifier and one data item (5) holding the object identifier indicative of the quantity of the primary product (A); and providing (S52) said quantity obtained during the pro- cessing step (S19).

No. of Pages : 40 No. of Claims : 15

(12) PATENT APPLICATION PUBLICATION
(21) Application No.202517095258 A
(19) INDIA
(22) Date of filing of Application :03/10/2025
(43) Publication Date : 14/11/2025

(54) Title of the invention : PROCESSING A PRIMARY PRODUCT INTO A SECONDARY PRODUCT

(51) International classification	:G06Q 10/10, G06Q 50/04
(31) Priority Document No	:23161601.2
(32) Priority Date	:13/03/2023
(33) Name of priority country	:EPO
(86) International Application No	:PCT/EP2024/056581
Filing Date	:12/03/2024
(87) International Publication No	:WO 2024/189039
(61) Patent of Addition to Application Number	:NA
Filing Date	:NA
(62) Divisional to Application Number	:NA
Filing Date	:NA

(71)**Name of Applicant :**
1)BASF SE
Address of Applicant :Carl-Bosch-Strasse 38 67056 Ludwigshafen am Rhein Germany
(72)**Name of Inventor :**
1)RUDOLPH, Hans
2)WINKLER, Christian-Andreas
3)WINDELER, Ingo
4)HARTMANN, Michael
5)PACK, Robert

(57) Abstract :
A method (100) for processing a primary product (A) into a secondary product (C), including the steps: providing (S15) a primary product (A); providing (S1) access to a database (3) configured to include multiple data structures (4); processing (S19) the primary product (A) into a distin- guishable quantity of a secondary product (C) by a processing device (11); generating (S20) a report by a state reporting device (14) associated with the processing device (11), said report being indicative of a processing state during the processing step (S19); generating (S28) an unique object identifier indicative of said distinguishable quantity obtained during said pro- cessing step (S19); generating (S29) a data structure (4) having one data item (5) holding the object identifier and one data item (5) holding said report; generating (S64) a status indicator in- dicative of a current status of a variable factor of the distinguishable quantity indicated by the object identifier, wherein the current status is at least one selected status of a group consisting of: an expected production date, a storage location, an ownership, a reservation, an intended disposition, an intended usage, a percentage of remaining quantity, an actual disposition, an ac- tual usage, and a price; and setting (S65) a data item (5) of the data structure (4) associated with the secondary product (C) such that it holds said status indicator; adding (S67) into the da- tabase (3) the data structure (4) associated with the distinguishable quantity of the secondary product (C); and providing (S52) said distinguishable quantity.

No. of Pages : 40 No. of Claims : 15

(12) PATENT APPLICATION PUBLICATION
(21) Application No.202517097140 A
(19) INDIA
(22) Date of filing of Application :08/10/2025
(43) Publication Date : 14/11/2025

(54) Title of the invention : ADSORBER MODULES AND REACTORS FOR CAPTURE OF CARBON DIOXIDE

(51) International classification	:B01D 53/02, B01D 53/62
(31) Priority Document No	:63/456195
(32) Priority Date	:31/03/2023
(33) Name of priority country	:U.S.A.
(86) International Application No	:PCT/US2024/021969
Filing Date	:28/03/2024
(87) International Publication No	:WO 2024/206632
(61) Patent of Addition to Application Number	:NA
Filing Date	:NA
(62) Divisional to Application Number	:NA
Filing Date	:NA

(71)**Name of Applicant :**
1)CORMETECH, INC.
Address of Applicant :5000 International Drive Durham, NC 27712 U.S.A.
(72)**Name of Inventor :**
1)HOWELL, Eric, Baker
2)DIFRANCESCO, Chris, E.
3)PRITCHARD, Scot

(57) Abstract :
In one aspect, modules comprising adsorbers are described herein for the removal of CO2 from the ambient atmosphere, flue gas streams, or process gas streams. Such modules, in some embodiments, provide unique structure, fluid flow paths and associated flow management characteristics for the efficient capture and processing of CO2 from fluid streams. In some embodiments, a module for the capture of CO2 from a fluid stream comprises a fluid stream inlet including an inlet duct and an inlet valve for reversibly sealing the inlet duct, and a bed for adsorption of the CO2 from the fluid stream. The module also includes a fluid stream outlet comprising an outlet duct and an outlet valve for reversibly sealing the outlet duct, wherein the fluid stream inlet duct is in fluid communication with piping for collection of an enriched CO2 fluid stream, and the outlet duct is in fluid communication with a source of desorption fluid operable to effectuate desorption of CO2 captured by the bed and/or cooling fluid operable to reduce temperature of the bed.

No. of Pages : 13 No. of Claims : 23

(12) PATENT APPLICATION PUBLICATION
(21) Application No.202517097141 A
(19) INDIA
(22) Date of filing of Application :08/10/2025
(43) Publication Date : 14/11/2025

(54) Title of the invention : BIOWAX EMULSIONS AS BIO-BASED BARRIER COATING DISPERSIONS

(51) International classification	:D21H 17/60, D21H 19/18, D21H 21/06, D21H 21/14, D21H 17/20
(31) Priority Document No	:63/456167
(32) Priority Date	:31/03/2023
(33) Name of priority country	:U.S.A.
(86) International Application No	:PCT/US2024/021934
Filing Date	:28/03/2024
(87) International Publication No	:WO 2024/206605
(61) Patent of Addition to Application Number	:NA
Filing Date	:NA
(62) Divisional to Application Number	:NA
Filing Date	:NA

(71)**Name of Applicant :**
1)KEMIRA OYJ
Address of Applicant :Energiakatu 4 FI-00180 Helsinki Finland
(72)**Name of Inventor :**
1)LUO, Yuping
2)ZOU, Yong

(57) Abstract :
The present invention relates to compositions and methods for forming substantially bio-based barrier coatings on paper and board substrates. The inventive bio-based barrier coatings comprise a biowax emulsion comprising one or more biowaxes, such as castor oil wax, formed by hydrogenation of a bio-based oil, such as castor oil. The barrier coating composition is formed by dispersing a biowax emulsion into a polyacrylate carrier dispersion, and may be applied as a coating e.g., on paper or board, e.g., those comprised of recycled fibers, using conventional industrial methods at ambient temperatures.

No. of Pages : 36 No. of Claims : 22

(12) PATENT APPLICATION PUBLICATION
(21) Application No.202517097142 A
(19) INDIA
(22) Date of filing of Application :08/10/2025
(43) Publication Date : 14/11/2025

(54) Title of the invention : a-IODO-SUBSTITUTED CARBOXYLIC ACID

(51) International classification	:C07C 51/50, C07C 53/19
(31) Priority Document No	:2023-041284
(32) Priority Date	:15/03/2023
(33) Name of priority country	:Japan
(86) International Application No	:PCT/JP2023/025295
Filing Date	:07/07/2023
(87) International Publication No	:WO 2024/189936
(61) Patent of Addition to Application Number	:NA
Filing Date	:NA
(62) Divisional to Application Number	:NA
Filing Date	:NA

(71)**Name of Applicant :**
1)GODO SHIGEN CO.,LTD
Address of Applicant :1545-1, Nanaido, Chosei-mura, Chosei-gun, Chiba 2994333 Japan
(72)**Name of Inventor :**
1)KOMATSU Hiroto
2)YAMAGUCHI Yu
3)NODA Takahiro

(57) Abstract :
The present invention provides an a-iodo-substituted carboxylic acid having excellent stability against heat, light, etc. The a-iodo-substituted carboxylic acid according to the present invention is represented by general formula (1) (In the formula, R1 and R2 each independently represent a hydrogen atom, a carboxyl group, an aliphatic group, or an aromatic group.), and the water content is in the range of 0.1-15.0 mass% and the acid component content is in the range of 0.15-3.0 mass%.

No. of Pages : 16 No. of Claims : 4

(12) PATENT APPLICATION PUBLICATION
(21) Application No.202517097169 A
(19) INDIA
(22) Date of filing of Application :08/10/2025
(43) Publication Date : 14/11/2025

(54) Title of the invention : METHOD FOR PRODUCING NONWOVEN FABRIC SHEET, DEVICE FOR PRODUCING NONWOVEN FABRIC SHEET, AND NONWOVEN FABRIC SHEET

(51) International classification	:D04H 1/645, B05D 7/00, C08J 5/04, D06M 15/05
(31) Priority Document No	:2023-064249
(32) Priority Date	:11/04/2023
(33) Name of priority country	:Japan
(86) International Application No	:PCT/JP2023/042002
Filing Date	:22/11/2023
(87) International Publication No	:WO 2024/214334
(61) Patent of Addition to Application Number	:NA
Filing Date	:NA
(62) Divisional to Application Number	:NA
Filing Date	:NA

(71)**Name of Applicant :**
1)THE JAPAN STEEL WORKS, LTD.
Address of Applicant :11-1, Osaki 1-chome, Shinagawa-ku, Tokyo 1410032 Japan
(72)**Name of Inventor :**
1)ISHIGURO, Ryo
2)KIMURA, Koichi

(57) Abstract :
The present invention makes it possible to stably produce a nonwoven fabric sheet even when a liquid material with a low viscosity is used. This method for producing a nonwoven fabric sheet includes (a) a step in which a liquid material LM that contains a raw material and has a viscosity of 100,000 mPa·s or less is prepared, (b) a step in which a sheet-like coat of the liquid material LM is applied on a nonwoven fabric NW by a coating machine, (c) a step in which the nonwoven fabric NW is impregnated with the liquid material LM, (d) a step in which the liquid material LM with which the nonwoven fabric NW is impregnated is solidified and a nonwoven fabric sheet 50 is obtained, and (e) a step in which the nonwoven fabric sheet 50 is rolled up.

No. of Pages : 29 No. of Claims : 14

(12) PATENT APPLICATION PUBLICATION
(19) INDIA
(22) Date of filing of Application :08/10/2025
(21) Application No.202517097182 A
(43) Publication Date : 14/11/2025

(54) Title of the invention : REPRESSOR FUSION PROTEIN SYSTEMS

(51) International classification	:C12N 15/113, C12N 9/10, C12N 9/22
(31) Priority Document No	:63/492845
(32) Priority Date	:29/03/2023
(33) Name of priority country	:U.S.A.
(86) International Application No	:PCT/US2024/021866
Filing Date	:28/03/2024
(87) International Publication No	:WO 2024/206565
(61) Patent of Addition to Application Number	:NA
Filing Date	:NA
(62) Divisional to Application Number	:NA
Filing Date	:NA

(71)**Name of Applicant :**
1)SCRIBE THERAPEUTICS INC.
Address of Applicant :1150 Marina Village Parkway Alameda, California 94501 U.S.A.
(72)**Name of Inventor :**
1)FERNANDES, Jason
2)HIGGINS, Sean
3)DENNY, Sarah
4)WHITE, Ross
5)OAKES, Benjamin
6)CHARLES, Emeric Jean Marius
7)WRIGHT, Addison
8)STAAHL, Brett T.
9)DEITER, Fred

(57) Abstract :
Provided herein are gene repressor systems comprising repressor fusion proteins, such as repressor fusion proteins comprising DNA binding proteins, in some cases catalytically dead CRISPR proteins and guide nucleic acids (gRNA), useful in the repression of genes. Also provided are methods of using such systems to repress transcription of genes.

No. of Pages : 231 No. of Claims : 36

(12) PATENT APPLICATION PUBLICATION
(21) Application No.202517096657 A
(19) INDIA
(22) Date of filing of Application :07/10/2025
(43) Publication Date : 14/11/2025

(54) Title of the invention : COMPOSITIONS INCLUDING ALDEHYDES WITH IMPROVED RELEASE RATE AND DEGRADATION PROPERTIES

(51) International classification	:A01N 25/02, A01N 25/28, A01N 35/02, A01N 37/02, A01N 31/02
(31) Priority Document No	:63/452321
(32) Priority Date	:15/03/2023
(33) Name of priority country	:U.S.A.
(86) International Application No	:PCT/EP2024/056991
Filing Date	:15/03/2024
(87) International Publication No	:WO 2024/189207
(61) Patent of Addition to Application Number	:NA
Filing Date	:NA
(62) Divisional to Application Number	:NA
Filing Date	:NA

(71)**Name of Applicant :**
1)FMC AGRICULTURAL SOLUTIONS A/S
Address of Applicant :Thyborønvej 78, Rønland 7673 Harboøre Denmark
(72)**Name of Inventor :**
1)GABRIELSSON, Anders

(57) Abstract :
Described herein are compositions including aldehydes. The compositions have improved release rate and degradation properties of the aldehydes. Also described herein are methods of altering a rate of evaporation of an aldehyde with the compositions. Also described herein are methods for controlling pests with the compositions.

No. of Pages : 67 No. of Claims : 27

(12) PATENT APPLICATION PUBLICATION
(21) Application No.202517096658 A
(19) INDIA
(22) Date of filing of Application :07/10/2025
(43) Publication Date : 14/11/2025

(54) Title of the invention : SHIP TO SHORE HORIZONTAL CONTAINER TRANSFER SYSTEMS

(51) International classification	:B63B 27/10, B63B 25/00, B66C 19/00, B66C 1/10
(31) Priority Document No	:63/463196
(32) Priority Date	:01/05/2023
(33) Name of priority country	:U.S.A.
(86) International Application No	:PCT/IL2024/050409
Filing Date	:01/05/2024
(87) International Publication No	:WO 2024/228189
(61) Patent of Addition to Application Number	:NA
Filing Date	:NA
(62) Divisional to Application Number	:NA
Filing Date	:NA

(71)**Name of Applicant :**
1)BAR, Tsvi
Address of Applicant :6 Dresner Street P.O. Box 11 6949758 Tel Aviv Israel
(72)**Name of Inventor :**
1)BAR, Tsvi

(57) Abstract :
There is provided herein a container vessel crane for horizontal and vertical relocation of cargo containers on a cargo vessel, the container vessel crane includes a trolly including: a container chamber which includes at least a bottom opening configured to insert the container into the container chamber; a spreader and head block chamber, mounted on top of the container chamber; and a machine room mounted on the spreader and head block chamber; a spreader, and a headblock comprising one or more pulleys and one or more cables; four or more container casting connections atop the machine room configured to facilitate connection by the spreader of the ship-to-shore (STS) crane; one or more cable drums configured to rotate thus to roll or unroll the one or more cables thereby allowing vertical movement (up and down) of the container; and one or more engines coupled to the one or more cable drums.

No. of Pages : 67 No. of Claims : 27

(12) PATENT APPLICATION PUBLICATION
(21) Application No.202517096685 A
(19) INDIA
(22) Date of filing of Application :07/10/2025
(43) Publication Date : 14/11/2025

(54) Title of the invention : FEEDER LINK SWITCHING IN NON-TERRESTRIAL NETWORKS

(51) International classification	:H04B 7/185, H04W 48/12
(31) Priority Document No	:63/455367
(32) Priority Date	:29/03/2023
(33) Name of priority country	:U.S.A.
(86) International Application No	:PCT/US2024/022347
Filing Date	:29/03/2024
(87) International Publication No	:WO 2024/206906
(61) Patent of Addition to Application Number	:NA
Filing Date	:NA
(62) Divisional to Application Number	:NA
Filing Date	:NA

(71)**Name of Applicant :**
1)OFINNO, LLC
Address of Applicant :1950 Opportunity Way Suite 1200 Reston, Virginia 20190 U.S.A.
(72)**Name of Inventor :**
1)KHOSHKHOLGH DASHTAKI, Mohammad Ghadir
2)CIRIK, Ali Cagatay
3)DINAN, Esmael Hejazi
4)JEON, Hyoungsuk
5)PRASAD, Gautham

(57) Abstract :
A method may include receiving, by a wireless device, a system information block (SIB) comprising a first non-terrestrial network (NTN) configuration comprising a first value for a validity timer, a second NTN configuration comprising a second value for the validity timer, and a third NTN configuration corresponding to at least one NTN neighbor cell. The method may also include starting, based on the receiving the SIB and for a cell, the validity timer with the first value. The method may further include performing a link switch without changing a physical cell identifier (PCI) of the cell. The link switch can include stopping the validity timer associated with the first value indicated in the SIB and starting the validity timer with the second value indicated in the SIB.

No. of Pages : 109 No. of Claims : 19

(12) PATENT APPLICATION PUBLICATION
(21) Application No.202517096694 A
(19) INDIA
(22) Date of filing of Application :07/10/2025
(43) Publication Date : 14/11/2025

(54) Title of the invention : METHOD FOR RECOVERING RARE EARTHS AND COPRODUCTS FROM PHOSPHOGYPSUM AND PHOSPHORIC ACID SLUDGE

(51) International classification	:C22B 3/22, C22B 7/00, C22B 59/00
(31) Priority Document No	:23305363.6
(32) Priority Date	:16/03/2023
(33) Name of priority country	:EPO
(86) International Application No	:PCT/MA2024/050009
Filing Date	:15/03/2024
(87) International Publication No	:WO 2024/191279
(61) Patent of Addition to Application Number	:NA
Filing Date	:NA
(62) Divisional to Application Number	:NA
Filing Date	:NA

(71)**Name of Applicant :**
1)UNIVERSITE MOHAMMED VI POLYTECHNIQUE
Address of Applicant :Lot 660 Hay Moulay Rachid BENGUERIR, 43150 MAROC BENGUERIR, 43150 MORACCO
(72)**Name of Inventor :**
1)KHALESS, Khaoula
2)CHANOURI, Hamza
3)BENHIDA, Rachid

(57) Abstract :
The present disclosure relates to a method for treating phosphogypsum or phosphoric acid sludge in order to recover rare earths, the method comprising the following consecutive steps: (a) treating the phosphogypsum or the phosphoric acid sludge according to the following steps (a1) or (a2), respectively: (a1) washing the phosphogypsum with a polar solvent and collecting the obtained solid residue; or (a2) separating the phosphoric acid sludge into a liquid phase and a solid residue, and separately collecting the obtained solid residue and the obtained liquid phase; washing the solid residue obtained at the end of the treatment step with a polar solvent at room temperature and separately collecting the obtained solid residue and the obtained liquid phase; and washing the solid residue obtained at the end of the washing step with a hot polar solvent and collecting the obtained solid residue and the obtained liquid phase; (b) drying, grinding and sieving the solid residue obtained at the end of step (a); (c) alkaline leaching the solid residue obtained at the end of step (b) using a strong inorganic base, and collecting the obtained solid residue and the obtained liquid phase; (d) drying, grinding and sieving the solid residue obtained at the end of step (c); (e) acid leaching the solid residue obtained at the end of step (d) using nitric acid and collecting the obtained solid residue and the obtained liquid phase; (f) precipitating calcium nitrate crystals from the liquid phase obtained at the end of step (e) and collecting the solid residue and the obtained liquid phase; (g) adjusting the pH of the liquid phase obtained at the end of step (f) to a value of between 1 to 1.8 by adding a strong base and collecting the obtained solid residue and the obtained liquid phase; (h) drying the solid residue obtained at the end of step (g) to obtain a solid product containing rare earths.

No. of Pages : 36 No. of Claims : 11

(12) PATENT APPLICATION PUBLICATION
(21) Application No.202517096034 A
(19) INDIA
(22) Date of filing of Application :06/10/2025
(43) Publication Date : 14/11/2025

(54) Title of the invention : METHODS, ARCHITECTURES, APPARATUSES AND SYSTEMS FOR RACE CONDITIONS AND LAYER 1/LAYER 2 TRIGGERED MOBILITY (LTM) USE

(51) International classification	:H04W 36/00, H04W 36/36, H04W 36/08
(31) Priority Document No	:63/456933
(32) Priority Date	:04/04/2023
(33) Name of priority country	:U.S.A.
(86) International Application No	:PCT/US2024/023032
Filing Date	:04/04/2024
(87) International Publication No	:WO 2024/211542
(61) Patent of Addition to Application Number	:NA
Filing Date	:NA
(62) Divisional to Application Number	:NA
Filing Date	:NA

(71)**Name of Applicant :**
1)INTERDIGITAL PATENT HOLDINGS, INC.
Address of Applicant :200 Bellevue Parkway Suite 300 Wilmington, Delaware 19809 U.S.A.
(72)**Name of Inventor :**
1)MARTIN, Brian
2)TEYEB, Oumer
3)FREDA, Martino
4)MARINIER, Paul
5)BALA, Erdem
6)WATTS, Dylan
7)KUBOTA, Keiichi

(57) Abstract :
Procedures, methods, architectures, apparatuses, systems, devices, and computer program products for layer 1/layer 2 (L1/2) triggered mobility (LTM). In an example, a wireless transmit/receive unit (WTRU) may receive information indicating configuration information associated with a quality for LTM. The WTRU may receive information indicating a measurement event. The WTRU may determine the quality for a first LTM set based on measurements of a first set of beams from a first plurality of cells. The WTRU may send a measurement report associated with the measurement event and/or perform a conditional reconfiguration based on, for example, (1) the measurement event being satisfied using the determined quality for the first LTM set and (2) an elapsed time since a last LTM cell switch.

No. of Pages : 73 No. of Claims : 28

(12) PATENT APPLICATION PUBLICATION
(21) Application No.202517096042 A
(19) INDIA
(22) Date of filing of Application :06/10/2025
(43) Publication Date : 14/11/2025

(54) Title of the invention : STEEL-STRIP PLATE TEMPERATURE PREDICTION METHOD, STEEL- STRIP PLATE TEMPERATURE CONTROL METHOD, STEEL-STRIP MANUFACTURING METHOD, AND METHOD FOR GENERATING STEEL -STRIP PLATE TEMPERATURE PREDICTION MODEL

(51) International classification	:C21D 11/00, C21D 9/56, C22C 38/00, C22C 38/04
(31) Priority Document No	:2023-053615
(32) Priority Date	:29/03/2023
(33) Name of priority country	:Japan
(86) International Application No	:PCT/JP2024/008977
Filing Date	:08/03/2024
(87) International Publication No	:WO 2024/203155
(61) Patent of Addition to Application Number	:NA
Filing Date	:NA
(62) Divisional to Application Number	:NA
Filing Date	:NA

(71)**Name of Applicant :**
1)JFE STEEL CORPORATION
Address of Applicant :2-3, Uchisaiwai-cho 2-chome, Chiyoda-ku, Tokyo 1000011 Japan
(72)**Name of Inventor :**
1)YOSHIMOTO Soshi

(57) Abstract :
Proposed are a steel-strip plate temperature prediction method, a steel-strip plate temperature control method, a steel-strip manufacturing method, and a method for generating a steel-strip plate temperature prediction model that make it possible to control with high precision the annealing temperature of a steel-strip so as to be an annealing temperature that is favorable for magnetic properties and thus obtain a steel-strip with stably excellent magnetic properties. This steel-strip plate temperature prediction method includes: an input data acquisition step in which operation data, attribute parameters relating to dimensions of a steel-strip, attribute parameters relating to the composition of the steel-strip, and attribute parameters relating to the shape of the steel-strip are acquired as input data for a steel-strip plate temperature prediction model; and a plate temperature prediction step in which the operation data, the attribute data relating to the dimensions of the steel-strip, the attribute parameters relating to the composition of the steel-strip, and the attribute parameters relating to the shape of the steel-strip that were acquired in the input data acquisition step are input into the plate temperature prediction model so as to output the plate temperature of the steel-strip on the exit side of a soaking area.

No. of Pages : 31 No. of Claims : 7

(12) PATENT APPLICATION PUBLICATION
(21) Application No.202517096044 A
(19) INDIA
(22) Date of filing of Application :06/10/2025
(43) Publication Date : 14/11/2025

(54) Title of the invention : JITTER MONITORING IN A WIRELESS COMMUNICATION NETWORK

(51) International classification	:H04L 43/087, H04L 41/0894, H04L 43/065, H04W 24/00, H04W 24/10
(31) Priority Document No	:63/457684
(32) Priority Date	:06/04/2023
(33) Name of priority country	:U.S.A.
(86) International Application No	:PCT/US2024/023446
Filing Date	:05/04/2024
(87) International Publication No	:WO 2024/211837
(61) Patent of Addition to Application Number	:NA
Filing Date	:NA
(62) Divisional to Application Number	:NA
Filing Date	:NA

(71)**Name of Applicant :**
1)INTERDIGITAL PATENT HOLDINGS, INC.
Address of Applicant :200 Bellevue Parkway Suite 300 Wilmington, DE 19809 U.S.A.
(72)**Name of Inventor :**
1)METHENNI, Achref
2)DI GIROLAMO, Rocco
3)STARSINIC, Michael
4)DE FOY, Xavier
5)SARATHCHANDRA, Magurawalage Chathura Madhusanka

(57) Abstract :
Systems, Methods, and instrumentalities are described herein related to jitter monitoring in a wireless communication network. A network device associated with the wireless communication network may receive information regarding one or more aspects of jitter monitoring within the wireless communication network. The network, device may determine a jitter monitoring policy based on the received information, and send the jitter monitoring policy to another device in the wireless communication network. After sending the jitter monitoring policy to the other device in the wireless communication network, the network device may receive an indication of a jitter measurement result from the other device.

No. of Pages : 36 No. of Claims : 20

(12) PATENT APPLICATION PUBLICATION
(21) Application No.202517096047 A
(19) INDIA
(22) Date of filing of Application :06/10/2025
(43) Publication Date : 14/11/2025

(54) Title of the invention : OPTIMIZED PROCESSING FOR REDUCING CHANNELS OF A STEREOPHONIC AUDIO SIGNAL

(51) International classification	:G10L 19/008, H04S 1/00, G10L 19/025
(31) Priority Document No	:FR2303719
(32) Priority Date	:13/04/2023
(33) Name of priority country	:France
(86) International Application No	:PCT/EP2024/059645
Filing Date	:10/04/2024
(87) International Publication No	:WO 2024/213555
(61) Patent of Addition to Application Number	:NA
Filing Date	:NA
(62) Divisional to Application Number	:NA
Filing Date	:NA

(71)**Name of Applicant :**
1)ORANGE
Address of Applicant :111, quai du Président Roosevelt 92130 Issy-les-Moulineaux France
(72)**Name of Inventor :**
1)RAGOT, Stéphane
2)GUERIN, Alexandre
3)LEFORT, Arnaud

(57) Abstract :
The invention relates to a processing method for reducing channels of a stereophonic signal to obtain a monophonic signal, comprising the following: - application (610, 611), to a current frame of said signal, of two (T1 or T2, T3) channel-reducing processing operations, one of the processing operations using filtering with re-phasing on at least one of the channels of the stereophonic signal and the other processing operation not using filtering with re-phasing, - selection (612) of one of said processing operations to be applied to the current frame, said selection being implemented depending on: — the presence or absence of at least one transient in the stereophonic signal, or — a quality level of the filtering of the stereophonic signal used when implementing the processing operation using filtering of the stereophonic signal. The invention also relates to a processing device for reducing channels implementing the method.

No. of Pages : 28 No. of Claims : 10

(12) PATENT APPLICATION PUBLICATION
(21) Application No.202517095059 A
(19) INDIA
(22) Date of filing of Application :03/10/2025
(43) Publication Date : 14/11/2025

(54) Title of the invention : GRAIN-ORIENTED ELECTRICAL STEEL SHEET AND METHOD FOR FORMING INSULATING COATING FILM

(51) International classification	:C23C 22/00, C21D 8/12, C21D 9/46, C22C 38/00, C22C 38/60
(31) Priority Document No	:2023-064826
(32) Priority Date	:12/04/2023
(33) Name of priority country	:Japan
(86) International Application No	:PCT/JP2024/014841
Filing Date	:12/04/2024
(87) International Publication No	:WO 2024/214818
(61) Patent of Addition to Application Number	:NA
Filing Date	:NA
(62) Divisional to Application Number	:NA
Filing Date	:NA

(71)**Name of Applicant :**
1)NIPPON STEEL CORPORATION
Address of Applicant :6-1, Marunouchi 2-chome, Chiyoda-ku, Tokyo 1008071 Japan
(72)**Name of Inventor :**
1)TAKEDA Kazutoshi
2)TAKATANI Shinsuke
3)KATAOKA Takashi
4)KOGAKURA Yuuki

(57) Abstract :
This grain-oriented electrical steel sheet has a base steel sheet and an insulating coating film that is formed on the surface of the base steel sheet. The insulating coating film has: an intermediate layer that is formed on the base steel sheet side and contains a crystalline metal phosphate salt; and a tension coating layer that is formed on the surface side of the insulating coating film. In a cross-section of the intermediate layer along the thickness direction, when the interface between the base steel sheet and the intermediate layer is observed at a magnification of 5,000 times with a scanning electronic microscope, the ratio of the interface length L to the observation image width W is 100.0% to 120.0%.

No. of Pages : 44 No. of Claims : 5

(12) PATENT APPLICATION PUBLICATION
(21) Application No.202517095061 A
(19) INDIA
(22) Date of filing of Application :03/10/2025
(43) Publication Date : 14/11/2025

(54) Title of the invention : GRAIN-ORIENTED ELECTRICAL STEEL SHEET AND METHOD FOR FORMING INSULATING COATING FILM

(51) International classification	:C25D 9/10, C21D 8/12, C21D 9/46, C22C 38/00, C22C 38/06
(31) Priority Document No	:2023-064840
(32) Priority Date	:12/04/2023
(33) Name of priority country	:Japan
(86) International Application No	:PCT/JP2024/014857
Filing Date	:12/04/2024
(87) International Publication No	:WO 2024/214824
(61) Patent of Addition to Application Number	:NA
Filing Date	:NA
(62) Divisional to Application Number	:NA
Filing Date	:NA

(71)**Name of Applicant :**
1)NIPPON STEEL CORPORATION
Address of Applicant :6-1, Marunouchi 2-chome, Chiyoda-ku, Tokyo 1008071 Japan
(72)**Name of Inventor :**
1)TAKEDA Kazutoshi
2)TAKATANI Shinsuke
3)KATAOKA Takashi
4)KOGAKURA Yuuki

(57) Abstract :
This grain-oriented electrical steel sheet comprises a base steel sheet and an insulating coating film formed on the surface of the base steel sheet, wherein the insulating coating film comprises an interlayer formed on the base steel sheet side and containing a crystalline metal phosphate and a tension coating film layer formed as a surface-side layer of the insulating coating film. The crystalline metal phosphate has a board shape and an average grain diameter of 0.5-3.0 μm.

No. of Pages : 40 No. of Claims : 4

(12) PATENT APPLICATION PUBLICATION
(21) Application No.202517095091 A
(19) INDIA
(22) Date of filing of Application :03/10/2025
(43) Publication Date : 14/11/2025

(54) Title of the invention : METHODS AND SYSTEMS FOR DETERMINING SUBJECT SPECIFIC AMOUNTS FOR COLLECTION

(51) International classification	:A61M 1/38, A61B 5/145, A61M 1/02
(31) Priority Document No	:63/462636
(32) Priority Date	:28/04/2023
(33) Name of priority country	:U.S.A.
(86) International Application No	:PCT/US2024/026191
Filing Date	:25/04/2024
(87) International Publication No	:WO 2024/226739
(61) Patent of Addition to Application Number	:NA
Filing Date	:NA
(62) Divisional to Application Number	:NA
Filing Date	:NA

(71)**Name of Applicant :**
1)TERUMO BCT, INC.
Address of Applicant :10811 West Collins Avenue Lakewood, Colorado 80215 U.S.A.
(72)**Name of Inventor :**
1)PITTINGER, John
2)FELT, Thomas J.

(57) Abstract :
A method for collection blood component using a medical system includes receiving, by the medical system, data associated with an individual subject, the data associated with the individual subject including a subject's initial hematocrit; identifying, by the medical system, a subject-specific pure component amount to be collected by the medical system, the subject-specific pure component amount to be collected by the medical system determined using the subject hematocrit, a total blood volume for the subject, and a targeted change in hematocrit; and performing, using the medical system, a component donation process to collect the identified subject-specific pure component amount to be collected.

No. of Pages : 26 No. of Claims : 17

(12) PATENT APPLICATION PUBLICATION
(21) Application No.202517095095 A
(19) INDIA
(22) Date of filing of Application :03/10/2025
(43) Publication Date : 14/11/2025

(54) Title of the invention : PROCESS FOR PRODUCING A GRAFTED POLYMER

(51) International classification	:B29C 48/37, B29B 7/90, B29C 48/29, B29C 48/285, B01F 23/451
(31) Priority Document No	:63/494581
(32) Priority Date	:06/04/2023
(33) Name of priority country	:U.S.A.
(86) International Application No	:PCT/US2024/019122
Filing Date	:08/03/2024
(87) International Publication No	:WO 2024/211052
(61) Patent of Addition to Application Number	:NA
Filing Date	:NA
(62) Divisional to Application Number	:NA
Filing Date	:NA

(71)**Name of Applicant :**
1)DOW GLOBAL TECHNOLOGIES LLC
Address of Applicant :2211 H.H. Dow Way Midland, MI 48674 U.S.A.
(72)**Name of Inventor :**
1)ESSEGHIR, Mohamed
2)SENGUPTA, Saurav S.
3)HOSSAIN, Mohammad, Arif
4)KHAN, Irfan
5)IMTHURN, Andreas
6)PARKER, Michael, J.

(57) Abstract :
The present disclosure provides a process. In an embodiment, the process includes providing an apparatus. The apparatus includes (A) a passageway with an interior for receiving a first flow stream (FFS1) comprising a melted polymeric composition, the passageway having an inflow end and an opposing outflow end. The apparatus includes (B) a gear pump assembly having (i) a housing, (ii) a gear chamber in the housing, (iii) an inlet placing the passageway outflow end in fluid communication with the gear chamber, the inlet having a width (lw), (iv) a plurality of intermeshing gears mounted for rotation in the gear chamber, the gears having teeth which engage with each other in the chamber, and (v) an outlet in fluid communication with the gear chamber. The apparatus includes (C) one or more injectors upstream of the gear pump assembly for adding a second fluid into the first flow stream. The second fluid is composed of a radically graftable species and a peroxide. The peroxide has an activation temperature. The injectors are located upstream of the inlet. The process includes introducing the second fluid from each injector into the FFS1 at a location upstream of the inlet and feeding the FFS1 and the second fluid into the inlet. The process includes mixing, in the gear chamber, the second fluid with FFS1 to form a mixed fluid flowstream (mFFS), discharging the mFFS from the outlet and into a curing chamber; and grafting, in the curing chamber, the radically graftable species to the polymer to form a grafted polymer.

No. of Pages : 23 No. of Claims : 4

(12) PATENT APPLICATION PUBLICATION
(21) Application No.202517096391 A
(19) INDIA
(22) Date of filing of Application :07/10/2025
(43) Publication Date : 14/11/2025

(54) Title of the invention : GRAIN-ORIENTED ELECTROMAGNETIC STEEL SHEET AND MAGNETIC DOMAIN CONTROL METHOD

(51) International classification	:C22C 38/00, C21D 8/12, C22C 38/60, H01F 1/147
(31) Priority Document No	:2023-073595
(32) Priority Date	:27/04/2023
(33) Name of priority country	:Japan
(86) International Application No	:PCT/JP2024/016535
Filing Date	:26/04/2024
(87) International Publication No	:WO 2024/225463
(61) Patent of Addition to Application Number	:NA
Filing Date	:NA
(62) Divisional to Application Number	:NA
Filing Date	:NA

(71)**Name of Applicant :**
1)NIPPON STEEL CORPORATION
Address of Applicant :6-1, Marunouchi 2-chome, Chiyoda-ku, Tokyo 1008071 Japan
(72)**Name of Inventor :**
1)IWAKI Masataka
2)TANAKA Tomohito
3)KATAOKA Takashi

(57) Abstract :
In this grain-oriented electromagnetic steel sheet, in a cross-section orthogonal to the extending direction of an irradiation mark of an energy ray and parallel to the sheet thickness direction, when a virtual line is drawn in the sheet thickness direction so as to include a position where compressive elastic stress measured by EBSD is 20 MPa or more, the degree of change in the compressive elastic stress on the virtual line is 4 MPa or less per 1 μm over the entire region in the sheet thickness direction.

No. of Pages : 25 No. of Claims : 4

(12) PATENT APPLICATION PUBLICATION
(21) Application No.202517096392 A
(19) INDIA
(22) Date of filing of Application :07/10/2025
(43) Publication Date : 14/11/2025

(54) Title of the invention : ARRANGEMENT FOR REGENERATING INDUSTRIAL SAND WITH ADDITIVE AND METHOD THEREOF

(51) International classification	:B22C 5/04, B22C 5/08, B22C 5/18, B09B 3/40
(31) Priority Document No	:20235338
(32) Priority Date	:22/03/2023
(33) Name of priority country	:Finland
(86) International Application No	:PCT/FI2024/050127
Filing Date	:19/03/2024
(87) International Publication No	:WO 2024/194528
(61) Patent of Addition to Application Number	:NA
Filing Date	:NA
(62) Divisional to Application Number	:NA
Filing Date	:NA

(71)**Name of Applicant :**
1)RESAND OY
Address of Applicant :Pruukinraitti 8 - 12 31160 Nuutajärvi Finland
(72)**Name of Inventor :**
1)WESIN, Toni
2)TASKINEN, Pekka

(57) Abstract :
In the method, adding (110) an aluminium silicate based additive to industrial sand, heating (120) the industrial sand and the additive added to it, whereby the additive reacts with impurities, that comprise at least alkali metal, in the in dustrial sand thus forming at least partially melted alkali salts, bringing (130) the heated industrial sand and the alkali salts into a motion occurring in relation to each other, whereby at least part of impurities remaining in the industrial sand adhere to the alkali salts thus forming grains, and sepa rating (140) industrial sand for removing grains from indus trial sand. An apparatus for regenerating industrial sand, which apparatus comprises a feeder (220) for feeding indus trial sand and an additive to a processing apparatus (300), a processing apparatus (300) for heating the industrial sand and the additive added to it, and further bringing the indus trial sand and the additive added to it into a motion occurring in relation to each other, and a separation device (400) con figured to separate industrial sand for removing grains from industrial sand.

No. of Pages : 16 No. of Claims : 16

(12) PATENT APPLICATION PUBLICATION
(21) Application No.202517096399 A
(19) INDIA
(22) Date of filing of Application :07/10/2025
(43) Publication Date : 14/11/2025

(54) Title of the invention : A METHOD FOR THE PRODUCTION OF A PYROLYSIS OIL FROM END-OF-LIFE PLASTICS

(51) International classification	:C10B 57/06, C10B 53/07, C10G 1/10, C10G 1/00, B01J 29/40
(31) Priority Document No	:2303478.8
(32) Priority Date	:09/03/2023
(33) Name of priority country	:U.K.
(86) International Application No	:PCT/EP2024/056160
Filing Date	:08/03/2024
(87) International Publication No	:WO 2024/184508
(61) Patent of Addition to Application Number	:NA
Filing Date	:NA
(62) Divisional to Application Number	:NA
Filing Date	:NA

(71)**Name of Applicant :**
1)PLASTIC ENERGY LIMITED
Address of Applicant :65 Carter Lane London Greater London EC4V 5DY U.K.
(72)**Name of Inventor :**
1)MOREAU, Pierre

(57) Abstract :
There is provided a method for the production of a pyrolysis oil from end-of-life plastics, the method comprising: (i) providing end-of-life plastics material; (ii) melting the end-of-life plastics material to form a molten plastics material; (iii) pyrolysing the molten plastics material in an oxygen-free atmosphere to provide pyrolysis gases and a char material; (iv) condensing the pyrolysis gases to provide the pyrolysis oil; wherein the method further comprises dispersing a zeolitic material in the end-of-life plastics material or in the molten plastics material, characterised in that the zeolitic material comprises a zeolite having a molar silica to alumina ratio (SAR) of from 10 to 140, a mean crystal size of about 200 nm or less, and wherein the zeolitic material has a mesopore volume of at least 0.30 cm3/g and a micropore volume of at least 0.10 cm3/g.

No. of Pages : 24 No. of Claims : 19

(12) PATENT APPLICATION PUBLICATION
(21) Application No.202517096437 A
(19) INDIA
(22) Date of filing of Application :07/10/2025
(43) Publication Date : 14/11/2025

(54) Title of the invention : VIBRATION DAMPING SHEET

(51) International classification	:G10K 11/168, B32B 3/30, B32B 27/00, B62D 29/04, F16F 15/02
(31) Priority Document No	:2023-074245
(32) Priority Date	:28/04/2023
(33) Name of priority country	:Japan
(86) International Application No	:PCT/JP2024/004562
Filing Date	:09/02/2024
(87) International Publication No	:WO 2024/224750
(61) Patent of Addition to Application Number	:NA
Filing Date	:NA
(62) Divisional to Application Number	:NA
Filing Date	:NA

(71)**Name of Applicant :**
1)TOYOTA BOSHOKU KABUSHIKI KAISHA
Address of Applicant :1-1, Toyoda-cho, Kariya-shi, Aichi 4488651 Japan
2)NIHON TOKUSHU TORYO CO., LTD.
(72)**Name of Inventor :**
1)NAGANO Masahiro
2)WATANABE Yuji
3)KAWAMURA Hiroshi

(57) Abstract :
A vibration damping sheet 10 comprises: a sheet body section 30 that is non-air-permeable and flexible; and a plurality of support sections 32 that are formed so as to protrude from the sheet body section 30 at mutual intervals, and that each have a tip surface 32 contacting a floor panel 12 that is an object, thereby supporting the sheet body section 30. Portions of the tip sides of the plurality of support sections 32, including the tip surfaces 32a, are viscoelastic and magnetic; and the attractive force per unit area of the vibration damping sheet 10 due to magnetism is at least 24 Nf/m2 and no more than 390 Nf/m2. Due to this configuration, at least 300–500 Hz of vibration can be effectively attenuated. The vibration damping sheet 10 can be used without being fused to an object and can exhibit high vibration damping performance without having a high mass.

No. of Pages : 24 No. of Claims : 9

(12) PATENT APPLICATION PUBLICATION
(21) Application No.202517096697 A
(19) INDIA
(22) Date of filing of Application :07/10/2025
(43) Publication Date : 14/11/2025

(54) Title of the invention : HERBICIDE-RESISTANT GENES FOR MITOCHONDRIAL TRANSFORMATION

(51) International classification	:C12N 15/82, C12N 9/02, C12N 15/11, C12N 15/79
(31) Priority Document No	:63/451173
(32) Priority Date	:09/03/2023
(33) Name of priority country	:U.S.A.
(86) International Application No	:PCT/US2024/019118
Filing Date	:08/03/2024
(87) International Publication No	:WO 2024/187111
(61) Patent of Addition to Application Number	:NA
Filing Date	:NA
(62) Divisional to Application Number	:NA
Filing Date	:NA

(71)**Name of Applicant :**
1)NAPIGEN, INC.
Address of Applicant :200 Powder Mill Road DISI-E500 Wilmington, Delaware 19803 U.S.A.
(72)**Name of Inventor :**
1)YADAV, Narendra Singh
2)SAKAI, Hajime
3)MULTANI, Dilbag Singh
4)CASTER, Cheryl S.
5)OROZCO, JR., Emil Meyer
6)KISHORE, Ganesh Murthy
7)HAMIDI, Mina
8)HEPPARD, Elmer
9)KIMURA, Sachie
10)MCMICHAEL, Colleen
11)SCHUBERT, Max Gabriel

(57) Abstract :
The present disclosure relates to genetically modified cells containing mitochondria that have been transformed with a polynucleotide encoding an herbicide-resistant enzyme, such that the cells can grow in the presence of an inhibitor of the enzyme.

No. of Pages : 164 No. of Claims : 33

(12) PATENT APPLICATION PUBLICATION
(21) Application No.202517096705 A
(19) INDIA
(22) Date of filing of Application :07/10/2025
(43) Publication Date : 14/11/2025

(54) Title of the invention : TRANSMISSION OF VOLUMETRIC IMAGES IN MULTIPLANE IMAGING FORMAT

(51) International classification	:H04N 19/46, H04N 19/597, H04N 19/70, H04N 21/218, H04N 21/2365
(31) Priority Document No	:63/495715
(32) Priority Date	:12/04/2023
(33) Name of priority country	:U.S.A.
(86) International Application No	:PCT/US2024/024017
Filing Date	:11/04/2024
(87) International Publication No	:WO 2024/215852
(61) Patent of Addition to Application Number	:NA
Filing Date	:NA
(62) Divisional to Application Number	:NA
Filing Date	:NA

(71)**Name of Applicant :**
1)DOLBY LABORATORIES LICENSING CORPORATION
Address of Applicant :1275 Market Street San Francisco, California 94103 U.S.A.
(72)**Name of Inventor :**
1)LU, Taoran
2)YIN, Peng
3)SU, Guan-Ming
4)LEE, Dae Yeol
5)MCCARTHY, Sean Thomas
6)HUANG, Tsung-Wei
7)OH, Sejin

(57) Abstract :
Methods and apparatus for transmission of volumetric images in the MPI format. According to an example embodiment, texture and alpha layers of multiplane images are packed, as tiles, into a sequence of video frames. The sequence of video frames is then compressed to generate a video bitstream, which is transmitted together with a metadata bitstream specifying at least the parameters of the packing arrangement for the tiles in the sequence of video frames. Example packing arrangements include various selectable spatial and temporal arrangements for texture layers, alpha layers, and camera views. In some examples, the metadata bitstream is implemented using a SEI message and includes parameters selected from the group consisting of a size of the reference view, the number of layers in the multiplane image, the number of simultaneous views, one or more characteristics of the packing arrangement, layer merging information, dynamic range adjustment information, and reference view information.

No. of Pages : 75 No. of Claims : 39

(12) PATENT APPLICATION PUBLICATION
(21) Application No.202517096719 A
(19) INDIA
(22) Date of filing of Application :07/10/2025
(43) Publication Date : 14/11/2025

(54) Title of the invention : METHODS, ARCHITECTURES, APPARATUSES AND SYSTEMS FOR RELOCATING SERVER OF A CONSUMER NODE IN A BREAK-BEFORE-MAKE PATTERN

(51) International classification	:H04L 67/1001, H04L 67/1034, H04L 69/40, H04W 24/04, H04W 48/08
(31) Priority Document No	:63/457821
(32) Priority Date	:07/04/2023
(33) Name of priority country	:U.S.A.
(86) International Application No	:PCT/US2024/023291
Filing Date	:05/04/2024
(87) International Publication No	:WO 2024/211727
(61) Patent of Addition to Application Number	:NA
Filing Date	:NA
(62) Divisional to Application Number	:NA
Filing Date	:NA

(71)**Name of Applicant :**
1)INTERDIGITAL PATENT HOLDINGS, INC.
Address of Applicant :200 Bellevue Parkway Suite 300 Wilmington, Delaware 19809 U.S.A.
(72)**Name of Inventor :**
1)ROY, Michel
2)DI LALLO, Kevin
3)ABBAS, Taimoor
4)STARSINIC, Michael

(57) Abstract :
In an embodiment, a method implemented in a wireless transmit/receive unit, WTRU, comprises receiving a server set configuration associated with an active server; detecting unavailability of the active server; selecting an alternate server based on the received server set configuration; transmitting, to the alternate server, a server switch request message, wherein the server switch request message includes a WTRU identifier; receiving, from the alternate server, a switch response message, wherein the switch response message includes procedures for communicating to the alternate server; and communicating to the alternate server based on the procedures.

No. of Pages : 45 No. of Claims : 20

(12) PATENT APPLICATION PUBLICATION
(21) Application No.202517096720 A
(19) INDIA
(22) Date of filing of Application :07/10/2025
(43) Publication Date : 14/11/2025

(54) Title of the invention : MULTI-RENDERER AND COMPUTATION DATA IN SCENE DESCRIPTION

(51) International classification :H04N 21/81
(31) Priority Document No :23305514.4
(32) Priority Date :07/04/2023
(33) Name of priority country :EPO
(86) International Application No :PCT/EP2024/058239
Filing Date :27/03/2024
(87) International Publication No :WO 2024/208686
(61) Patent of Addition to Application Number :NA
Filing Date :NA
(62) Divisional to Application Number :NA
Filing Date :NA

(71)**Name of Applicant :**
1)INTERDIGITAL CE PATENT HOLDINGS, SAS
Address of Applicant :3 rue du Colonel Moll 75017 Paris France
(72)**Name of Inventor :**
1)HIRTZLIN, Patrice
2)JOUET, Pierrick
3)LELIEVRE, Sylvain
4)FAIVRE D'ARCIER, Etienne
5)FONTAINE, Loic

(57) Abstract :
Some embodiments of a method may include obtaining information indicating interaction with one or more handlers used in handling a three-dimensional (3D) scene. For some embodiments, the method may further include identifying handler data, object data, and component data associated with at least one respective handler of the one or more handlers used. Some embodiments of the method may further include responsive to determining handler data is global scene data, adding, at a scene-level, handler data to a dedicated structure for the respective handler. For some embodiments, the method may further include adding, at a node-level, for at least one node associated with the respective handler, object data to the dedicated structure for the respective handler. Some embodiments of the method may further include adding, at a component-level, for at least one component associated with the respective node, component data to the dedicated structure for the respective handler.

No. of Pages : 46 No. of Claims : 9

(12) PATENT APPLICATION PUBLICATION
(21) Application No.202517096728 A
(19) INDIA
(22) Date of filing of Application :07/10/2025
(43) Publication Date : 14/11/2025

(54) Title of the invention : RESOURCE SELECTION FOR DYNAMICALLY SHARED SIDELINK CHANNELS WITH MIXED NUMEROLOGIES

(51) International classification	:H04W 72/02
(31) Priority Document No	:63/503444
(32) Priority Date	:19/05/2023
(33) Name of priority country	:U.S.A.
(86) International Application No	:PCT/US2024/021291
Filing Date	:25/03/2024
(87) International Publication No	:WO 2024/242751
(61) Patent of Addition to Application Number	:NA
Filing Date	:NA
(62) Divisional to Application Number	:NA
Filing Date	:NA

(71)**Name of Applicant :**
1)QUALCOMM INCORPORATED
Address of Applicant :ATTN: International IP Administration 5775 Morehouse Drive San Diego, California 92121-1714 U.S.A.
(72)**Name of Inventor :**
1)DUTTA, Sourjya
2)LI, Qing

(57) Abstract :
Various aspects of the present disclosure generally relate to wireless communication. In some aspects, a transmitting user equipment (UE) (Tx UE) may receive a co-channel coexistence sidelink configuration for identifying and selecting a sidelink resource of a first network based, at least in part, on whether the sidelink resource of the first network occurs during a subframe of a sidelink resource of a second network. The Tx UE may transmit a sidelink message to a receiving UE in accordance with the co-channel coexistence sidelink configuration. Numerous other aspects are described.

No. of Pages : 47 No. of Claims : 20

(12) PATENT APPLICATION PUBLICATION
(21) Application No.202517095097 A
(19) INDIA
(22) Date of filing of Application :03/10/2025
(43) Publication Date : 14/11/2025

(54) Title of the invention : PROCESS FOR MIXING A FLUID MELTFLOW STREAM AND RECYCLE

(51) International classification	:B29B 7/48, B01F 25/31, B01F 25/51, B01F 25/62, B29B 7/94
(31) Priority Document No	:63/494558
(32) Priority Date	:06/04/2023
(33) Name of priority country	:U.S.A.
(86) International Application No	:PCT/US2024/019129
Filing Date	:08/03/2024
(87) International Publication No	:WO 2024/211053
(61) Patent of Addition to Application Number	:NA
Filing Date	:NA
(62) Divisional to Application Number	:NA
Filing Date	:NA

(71)**Name of Applicant :**
1)DOW GLOBAL TECHNOLOGIES LLC
Address of Applicant :2211 H.H. Dow Way Midland, MI 48674 U.S.A.
(72)**Name of Inventor :**
1)ESSEGHIR, Mohamed
2)SENGUPTA, Saurav, S.
3)HOSSAIN, Mohammad, Arif
4)KHAN, Irfan
5)IMTHURN, Andreas
6)PARKER, Michael, J.

(57) Abstract :
The present disclosure provides a process comprising providing an apparatus including (A) a passageway for receiving a first flow stream (FFS1), the passageway having an inflow end and an opposing outflow end, (B) a gear pump assembly downstream of the passageway, (C) one or more conduits extending along opposing sides of the gear pump assembly, each conduit being in fluid communication with the outlet of the gear pump assembly and the passageway, (D) an injector in each conduit for adding a second fluid (F2) into each conduit. The process includes introducing the F2 from each respective outlet duct into the FFS1 at a location upstream of the inlet of the gear pump assembly, feeding the FFS1 and the F2 into the inlet of the gear pump assembly and mixing, in the gear chamber, the F2 with FFS1 to form a mixed fluid flowstream and discharging it.

No. of Pages : 15 No. of Claims : 7

(12) PATENT APPLICATION PUBLICATION
(21) Application No.202517095102 A
(19) INDIA
(22) Date of filing of Application :03/10/2025
(43) Publication Date : 14/11/2025

(54) Title of the invention : PROCESS FOR PRODUCING A CROSSLINKED ARTICLE

(51) International classification	:B29B 7/94, B01F 23/451, B01F 25/31, B01F 25/62, B29C 35/02
(31) Priority Document No	:63/494612
(32) Priority Date	:06/04/2023
(33) Name of priority country	:U.S.A.
(86) International Application No	:PCT/US2024/019134
Filing Date	:08/03/2024
(87) International Publication No	:WO 2024/211054
(61) Patent of Addition to Application Number	:NA
Filing Date	:NA
(62) Divisional to Application Number	:NA
Filing Date	:NA

(71)**Name of Applicant :**
1)DOW GLOBAL TECHNOLOGIES LLC
Address of Applicant :2211 H.H Dow Way Midland, MI 48674 U.S.A.
(72)**Name of Inventor :**
1)ESSEGHIR, Mohamed
2)SENGUPTA, Saurav, S.
3)HOSSAIN, Mohammad, Arif
4)KHAN, Irfan
5)IMTHURN, Andreas
6)PARKER, Michael, J.

(57) Abstract :
The present disclosure provides a process. In an embodiment, the process includes providing an apparatus. The apparatus includes (A) a passageway with an interior for receiving a first flow stream (FFS1) comprising a melted polymeric composition, the passageway having an inflow end and an opposing outflow end. The apparatus includes (B) a gear pump assembly having (i) a housing, (ii) a gear chamber in the housing, (iii) an inlet placing the passageway outflow end in fluid communication with the gear chamber, the inlet having a width (lw), (iv) a plurality of intermeshing gears mounted for rotation in the gear chamber, the gears having teeth which engage with each other in the chamber, and (v) an outlet in fluid communication with the gear chamber. The apparatus includes (C) one or more injectors upstream of the gear pump assembly for adding a second fluid into the first flow stream. The second fluid is composed of an optional radically graftable species, an optional cure agent, and a peroxide. The peroxide has an activation temperature. The process includes introducing the second fluid from each injector into the FFS1 at a location upstream of the inlet and feeding the FFS1 and the second fluid into the inlet. The process includes mixing, in the gear chamber, the second fluid with FFS1 to form a mixed fluid flowstream (mFFS), and discharging the mFFS from the outlet and into a die head to form a shaped article. The process includes passing the shaped article through a curing chamber, and crosslinking, in the curing chamber, the polymer to form a crosslinked shaped article (CSA).

No. of Pages : 23 No. of Claims : 5

(12) PATENT APPLICATION PUBLICATION
(21) Application No.202517095124 A
(19) INDIA
(22) Date of filing of Application :03/10/2025
(43) Publication Date : 14/11/2025

(54) Title of the invention : NEW SPORELESS PLEUROTUS STRAIN

(51) International classification :A01H 15/00
(31) Priority Document No :23305429.5
(32) Priority Date :28/03/2023
(33) Name of priority country :EPO
(86) International Application No :PCT/EP2024/058615
Filing Date :28/03/2024
(87) International Publication No :WO 2024/200729
(61) Patent of Addition to Application Number :NA
Filing Date :NA
(62) Divisional to Application Number :NA
Filing Date :NA

(71)**Name of Applicant :**
1)SOMYCEL
Address of Applicant :Anc R Carnot ZI Sud Route de Tours 37130 LANGEAIS France
(72)**Name of Inventor :**
1)AMINI, Aniça
2)PÉGÉ, Ségolène
3)WACH, Mark

(57) Abstract :
The present invention relates to the development of a new sporeless Pleurotus strain designated FiBABH-334, a representative culture thereof having been deposited at the Collection Nationale de Cultures de Microorganismes (CNCM), Institut Pasteur, 25 rue du Docteur Roux, 75724 PARIS Cedex 15, on March 21, 2023, under the CNCM Accession Number I-5939. This sporeless Pleurotus strain displays an excellent yield weight of the harvested crop and a very good shelf-life of the mushroom products. The present invention also relates to cultures obtained, descended, or otherwise derived from this strain. More particularly, the present invention relates to cultures comprising at least one haploid set of chromosomes of said strain, especially to monokaryons thereof or to F1 hybrids produced by mating this monokaryon with a second Pleurotus line. The invention further relates to methods of use of the cultures described hereinabove.

No. of Pages : 36 No. of Claims : 18

(12) PATENT APPLICATION PUBLICATION
(21) Application No.202517095129 A
(19) INDIA
(22) Date of filing of Application :03/10/2025
(43) Publication Date : 14/11/2025

(54) Title of the invention : PROCESSES FOR PRODUCING ALKYL ACRYLATE DIMERS

(51) International classification	:C07C 51/09, C07C 57/13, C07C 67/303, C07C 69/34, C07C 67/347
(31) Priority Document No	:23167673.5
(32) Priority Date	:13/04/2023
(33) Name of priority country	:EPO
(86) International Application No	:PCT/EP2024/059258
Filing Date	:04/04/2024
(87) International Publication No	:WO 2024/213474
(61) Patent of Addition to Application Number	:NA
Filing Date	:NA
(62) Divisional to Application Number	:NA
Filing Date	:NA

(71)**Name of Applicant :**
1)SPECIALTY OPERATIONS FRANCE
Address of Applicant :9 rue des Cuirassiers Immeuble Silex 2 Solvay 69003 Lyon France
(72)**Name of Inventor :**
1)BACK, Olivier
2)RACHET, Julien Rabih

(57) Abstract :
The present invention relates to a process for producing an alkyl acrylate dimer. Furthermore, the present invention relates to a process for producing a hydrogenated alkyl acrylate dimer obtained by the dimerization process according to the present invention. Moreover, the present invention relates to a process of producing a hydrolyzed alkyl acrylate dimer obtained by the dimerization process according to the present invention.

No. of Pages : 30 No. of Claims : 16

(12) PATENT APPLICATION PUBLICATION
(21) Application No.202517096438 A
(19) INDIA
(22) Date of filing of Application :07/10/2025
(43) Publication Date : 14/11/2025

(54) Title of the invention : HYDROPHOBIC AND HYDROPHILIC MODIFIED MALEATED NATURAL OILS AND AGRICULTURAL COMPOSITIONS THEREOF

(51) International classification	:A01N 65/20, C07D 307/54
(31) Priority Document No	:63/453964
(32) Priority Date	:22/03/2023
(33) Name of priority country	:U.S.A.
(86) International Application No	:PCT/US2024/021040
Filing Date	:22/03/2024
(87) International Publication No	:WO 2024/197212
(61) Patent of Addition to Application Number	:NA
Filing Date	:NA
(62) Divisional to Application Number	:NA
Filing Date	:NA

(71)**Name of Applicant :**
1)ISP INVESTMENTS LLC
Address of Applicant :1011 Centre Road, Suite 315 Wilmington, Delaware 19805 U.S.A.
(72)**Name of Inventor :**
1)MUSA, Osama M.
2)CHENAULT, Henry Keith
3)MOORE, Kiel Trenton
4)GHOSH, Mousumi

(57) Abstract :
The present invention provides agricultural compositions comprising (A) a reaction product of a maleated natural oil and a functionalized or unfunctionalized moiety selected from the group consisting of hydrophobic moieties, hydrophilic moieties, and combinations thereof; and further comprising (B) one or more agriculturally active ingredient(s); and (C) one or more ingredient(s). In yet another aspect of the invention, the invention provides the compound useful in agricultural composition represented by the structures set out below (I) and (II):

No. of Pages : 71 No. of Claims : 38

(12) PATENT APPLICATION PUBLICATION
(21) Application No.202517096439 A
(19) INDIA
(22) Date of filing of Application :07/10/2025
(43) Publication Date : 14/11/2025

(54) Title of the invention : LITHIUM SECONDARY BATTERY

(51) International classification	:H01M 10/052, H01M 4/131, H01M 10/0562, H01M 4/525, H01M 4/505
(31) Priority Document No	:10-2023-0058563
(32) Priority Date	:04/05/2023
(33) Name of priority country	:Republic of Korea
(86) International Application No	:PCT/KR2024/004873
Filing Date	:11/04/2024
(87) International Publication No	:WO 2024/228487
(61) Patent of Addition to Application Number	:NA
Filing Date	:NA
(62) Divisional to Application Number	:NA
Filing Date	:NA

(71)**Name of Applicant :**
1)LG ENERGY SOLUTION, LTD.
Address of Applicant :Tower 1, 108, Yeoui-daero, Yeongdeungpo-gu, Seoul 07335 Republic of Korea
(72)**Name of Inventor :**
1)BYUN, Seoungwoo
2)HWANG, Sunwook
3)JANG, Eunji
4)RYU, Jihoon
5)LIM, Taeseob
6)KIM, Dong Kyu
7)JUN, Youngjin
8)LEE, Sangryeo

(57) Abstract :
The present invention relates to a lithium secondary battery with improved output characteristics and low-temperature characteristics. The lithium secondary battery comprises a cathode, an anode, and an electrolyte containing a lithium salt and a non-aqueous organic solvent. The cathode comprises: a cathode current collector; and an active material layer formed on the cathode current collector and containing a cathode active material, a conductive material, and an oxide-based solid electrolyte having a lithium ion source. The cathode active material and the oxide-based solid electrolyte are dispersed in the form of particles within the active material layer, and the average particle diameter (D50) of the particles satisfies a predetermined ratio.

No. of Pages : 30 No. of Claims : 12

(12) PATENT APPLICATION PUBLICATION
(21) Application No.202517096464 A
(19) INDIA
(22) Date of filing of Application :07/10/2025
(43) Publication Date : 14/11/2025

(54) Title of the invention : METHOD FOR ESTIMATING BLENDED COAL COKE STRENGTH AFTER REACTION, METHOD FOR PRODUCING BLENDED COAL COKE, METHOD FOR OPERATING COKE OVEN, AND METHOD FOR CONTROLLING SINGLE COAL BLENDING RATIO

(51) International classification	:C10B 57/00, C10B 57/04
(31) Priority Document No	:2023-069154
(32) Priority Date	:20/04/2023
(33) Name of priority country	:Japan
(86) International Application No	:PCT/JP2024/005707
Filing Date	:19/02/2024
(87) International Publication No	:WO 2024/219074
(61) Patent of Addition to Application Number	:NA
Filing Date	:NA
(62) Divisional to Application Number	:NA
Filing Date	:NA

(71)**Name of Applicant :**
1)JFE STEEL CORPORATION
Address of Applicant :2-3, Uchisaiwai-cho 2-chome, Chiyoda-ku, Tokyo 1000011 Japan
(72)**Name of Inventor :**
1)ARAKAWA Sara
2)YAMAMOTO Tetsuya
3)TANDOKORO Kohei
4)ISHIDA Tomoharu

(57) Abstract :
Provided is a method for rapidly estimating blended coal coke strength after reaction. The present invention is a method for estimating blended coal coke strength after reaction, the method being for estimating the coke strength after reaction (CSR) of blended coal, and the method comprising: a step in which, when the weight reduction rate when coke is kept for a prescribed length of time in a prescribed temperature range in a CO2 atmosphere is considered a TG reaction rate, the TG reaction rate of single coal coke is measured by thermogravimetric analysis and the TG reaction rate of blended coal coke is estimated on the basis of a weighted average value of the measured TG reaction rate of the single coal coke; a step in which a blended coal coke reactivity index (CRI) is estimated on the basis of the TG reaction rate of the blended coal coke estimated in the previous step; and a step in which a blended coal coke strength after reaction (CSR) is estimated on the basis of the blended coal coke reactivity index (CRI) estimated in the previous step and the strength (DI) of the blended coal coke.

No. of Pages : 23 No. of Claims : 7

(12) PATENT APPLICATION PUBLICATION
(21) Application No.202517096511 A
(19) INDIA
(22) Date of filing of Application :07/10/2025
(43) Publication Date : 14/11/2025

(54) Title of the invention : DRIVING CONTROL APPARATUS OF ELECTRIC VEHICLE AND CONTROL METHOD THEREOF

(51) International classification	:B60L 15/20, B60L 50/60, B60L 3/00, B60L 58/12, G01R 31/382
(31) Priority Document No	:10-2023-0033352
(32) Priority Date	:14/03/2023
(33) Name of priority country	:Republic of Korea
(86) International Application No	:PCT/KR2023/005287
Filing Date	:19/04/2023
(87) International Publication No	:WO 2024/190952
(61) Patent of Addition to Application Number	:NA
Filing Date	:NA
(62) Divisional to Application Number	:NA
Filing Date	:NA

(71)**Name of Applicant :**
1)HL MANDO CORPORATION
Address of Applicant :32 Hamanho-gil, Poseung-eup Pyeongtaek-si Gyeonggi-do 17962 Republic of Korea
(72)**Name of Inventor :**
1)PARK, Woosung

(57) Abstract :
A driving control apparatus of an electric vehicle, according to an aspect of the disclosed invention, may comprise: a battery for supplying power to the vehicle; and a motor controller for controlling a motor which is supplied with power from the battery and drives the vehicle, wherein the motor controller: acquires information about the vehicle; on the basis of the acquired information about the vehicle, determines whether the battery is charged; and if, as a result of the determination, the battery is being charged, controls the motor such that driving of the vehicle is limited.

No. of Pages : 22 No. of Claims : 20

(12) PATENT APPLICATION PUBLICATION
(21) Application No.202517096522 A
(19) INDIA
(22) Date of filing of Application :07/10/2025
(43) Publication Date : 14/11/2025

(54) Title of the invention : FLAT-SHAPED CERAMIC ELECTRIC HEATING ELEMENT

(51) International classification	:H05B 3/44, H05B 3/10
(31) Priority Document No	:202310235855.1
(32) Priority Date	:13/03/2023
(33) Name of priority country	:China
(86) International Application No	:PCT/CN2023/096027
Filing Date	:24/05/2023
(87) International Publication No	:WO 2024/187587
(61) Patent of Addition to Application Number	:NA
Filing Date	:NA
(62) Divisional to Application Number	:NA
Filing Date	:NA

(71)**Name of Applicant :**
1)CHONGQING LE-MARK TECHNOLOGY CO., LTD.
Address of Applicant :15-1 Fengsheng Road, Jiulongpo District Chongqing 401329 China
(72)**Name of Inventor :**
1)LEIGH, Peter

(57) Abstract :
Disclosed in the present invention is a square block-type ceramic electric heating body, which comprises an outer conductive layer, an outer resistive layer, an inner insulating layer and an inner insulating reinforcement layer, wherein the outer conductive layer is located at upper segments on two sides of the outer resistive layer, and a positive electrode site and a negative electrode site are provided on an end face of the outer conductive layer. The cross section of the square block-type ceramic electric heating body is a square structural body. The the square block-type ceramic electric heating body further comprises a head conductive layer, which wraps around a bottom end of the outer resistive layer. Compared with a previous heating body for left and right circuits in the company, the middle square block-type ceramic electric heating body in the present invention has a longitudinal insulating groove eliminated, such that the strength of a product is effectively improved, premature fracture caused by cyclic impacts of thermal stresses is avoided, and changes in resistance distribution and migration of a temperature region brought about by the continuous expansion of a stress crack are also avoided.

No. of Pages : 7 No. of Claims : 7

(12) PATENT APPLICATION PUBLICATION
(21) Application No.202517095259 A
(19) INDIA
(22) Date of filing of Application :03/10/2025
(43) Publication Date : 14/11/2025

(54) Title of the invention : USER EQUIPMENT BASED TIMING ADVANCE ESTIMATION

(51) International classification :H04W 56/00
(31) Priority Document No :NA
(32) Priority Date :NA
(33) Name of priority country :NA
(86) International Application No :PCT/CN2023/086351
Filing Date :05/04/2023
(87) International Publication No :WO 2024/207257
(61) Patent of Addition to Application Number :NA
Filing Date :NA
(62) Divisional to Application Number :NA
Filing Date :NA

(71)**Name of Applicant :**
1)APPLE INC.
Address of Applicant :One Apple Park Way Cupertino California 95014 U.S.A.
(72)**Name of Inventor :**
1)PALLE VENKATA, Naveen Kumar R.
2)LI, Qiming
3)XU, Fangli
4)HE, Hong
5)HU, Haijing
6)CHEN, Yuqin
7)WU, Zhibin
8)ROSSBACH, Ralf
9)KUO, Ping-Heng
10)CHENG, Peng

(57) Abstract :
The present application relates to techniques for UE-based TA estimations. For example, a UE can be connected to a base station via a first cell and can be configured with information for a UE-based TA estimation. This information can be included in a cell configuration of a second cell, a group configuration of a group of cells, or a measurement configuration. The UE can perform a first timing measurement on a first reference signal sent by the first cell and a second timing measurement on a second reference signal sent by the second cell. Upon a command to connect to the second cell (e.g., for a first cell to second cell handover), the UE can determine a timing difference between the two timing measurements and determine, based on a first TA of the first cell and the timing difference, a second TA to use for the second cell.

No. of Pages : 45 No. of Claims : 29

(12) PATENT APPLICATION PUBLICATION
(21) Application No.202517095262 A
(19) INDIA
(22) Date of filing of Application :03/10/2025
(43) Publication Date : 14/11/2025

(54) Title of the invention : PROCESSING A PRIMARY PRODUCT INTO A SECONDARY PRODUCT

(51) International classification	:G06Q 10/10, G06Q 50/04
(31) Priority Document No	:23161607.9
(32) Priority Date	:13/03/2023
(33) Name of priority country	:EPO
(86) International Application No	:PCT/EP2024/056584
Filing Date	:12/03/2024
(87) International Publication No	:WO 2024/189041
(61) Patent of Addition to Application Number	:NA
Filing Date	:NA
(62) Divisional to Application Number	:NA
Filing Date	:NA

(71)**Name of Applicant :**
1)BASF SE
Address of Applicant :Carl-Bosch-Strasse 38 67056 Ludwigshafen am Rhein Germany
(72)**Name of Inventor :**
1)HARTMANN, Michael
2)RUDOLPH, Hans
3)PACK, Robert
4)WINKLER, Christian-Andreas
5)WINDELER, Ingo

(57) Abstract :
A method (100) for processing at least one primary product (A,B) into a secondary product (C), including the steps: providing (S15) at least one primary product (A,B); processing (S19) the at least one primary product (A,B) into a distinguishable quantity of a secondary product (C) by a processing device (11); generating (S20) a report by a state reporting device (14) associated with the processing device (11), wherein said report includes at least one state value indicative of a processing state during the processing step (S19); generating (S28) an unique object identifier indicative of said distinguishable quantity obtained by said processing during the processing step (S19); generating (S29) a data structure (4) having at least two data items (5), wherein one data item (5) holds the object identifier, and wherein one further data item (5) holds said generated report; signing (S60) the data structure by setting a data item (5) of the data structure (4) such that it holds a signature indicative of a natural or legal person and/or a group thereof; and setting (S61) a data item of the data structure such that it holds a cryptographic representation of the signed data structure (4); and providing (S52) said distinguishable quantity obtained by said processing during the processing step (S19).

No. of Pages : 40 No. of Claims : 15

(12) PATENT APPLICATION PUBLICATION
(21) Application No.202517095264 A
(19) INDIA
(22) Date of filing of Application :03/10/2025
(43) Publication Date : 14/11/2025

(54) Title of the invention : FRICTION CLUTCH

(51) International classification	:F16D 13/38, F16D 13/71
(31) Priority Document No	:10 2023 108 708.8
(32) Priority Date	:05/04/2023
(33) Name of priority country	:Germany
(86) International Application No	:PCT/DE2024/100178
Filing Date	:05/03/2024
(87) International Publication No	:WO 2024/208393
(61) Patent of Addition to Application Number	:NA
Filing Date	:NA
(62) Divisional to Application Number	:NA
Filing Date	:NA

(71)**Name of Applicant :**
1)SCHAEFFLER TECHNOLOGIES AG & CO. KG
Address of Applicant :Industriestraße 1-3 91074 Herzogenaurach Germany
(72)**Name of Inventor :**
1)AHNERT, Gerd
2)OBITZ, Alexander

(57) Abstract :
The invention relates to a friction clutch (1) comprising a housing (2), a counter-pressure plate (6) secured to the housing, a pressure plate (4) which can be moved to a limited extent in the axial direction (A) of the friction clutch (1), multiple actuating devices (5), a spring mechanism (15) and a clutch disc (3), wherein, in an engaged state of the friction clutch (1), the clutch disc (3) is frictionally clamped between the counter-pressure plate (6) and the pressure plate (4) by a force generated by the spring mechanism (15), wherein, in a disengaged state of the friction clutch (1), the pressure plate (4) is separated from the clutch disc (3) via the actuating devices (5) against the force generated by the spring mechanism (15), wherein each of the actuating devices (5) has a respective actuating lever (9) and an intermediate lever (10), wherein an outer end (11) of the actuating lever (9) in the radial direction (R) of the friction clutch (1) is rotatably secured to the housing (2) via an actuating bearing (16), wherein the intermediate lever (10) has a radially (R) outer first end (13) and a radially (R) inner second end (14), wherein the intermediate lever (10) is rotatably secured to the actuating lever (9) via an intermediate bearing (17), wherein the intermediate lever (10) acts on the pressure plate (4) at the first end (13) and is supported by the counter pressure plate (6) at the second end (14), and wherein a multi-jointed coupling device (21) is arranged between the second end (14) of the intermediate lever (10) and the counter pressure plate (6).

No. of Pages : 13 No. of Claims : 10

(12) PATENT APPLICATION PUBLICATION
(21) Application No.202517096048 A
(19) INDIA
(22) Date of filing of Application :06/10/2025
(43) Publication Date : 14/11/2025

(54) Title of the invention : OPTIMIZED PROCESSING FOR REDUCING CHANNELS OF A STEREOPHONIC AUDIO SIGNAL

(51) International classification	:G10L 19/008, H04S 1/00
(31) Priority Document No	:FR2303719
(32) Priority Date	:13/04/2023
(33) Name of priority country	:France
(86) International Application No	:PCT/EP2024/059644
Filing Date	:10/04/2024
(87) International Publication No	:WO 2024/213554
(61) Patent of Addition to Application Number	:NA
Filing Date	:NA
(62) Divisional to Application Number	:NA
Filing Date	:NA

(71)**Name of Applicant :**
1)ORANGE
Address of Applicant :111, quai du Président Roosevelt 92130 Issy-les-Moulineaux France
(72)**Name of Inventor :**
1)GUERIN, Alexandre
2)LEFORT, Arnaud
3)RAGOT, Stéphane

(57) Abstract :
The invention relates to a processing method for reducing channels of a stereophonic signal to obtain a monophonic signal, comprising selection (305), for one stereophonic signal frame, between: - a first channel-reducing processing mode (T1) comprising filtering with re-phasing on each of the channels of the stereophonic signal according to an angle defined by half the determined phase difference (303, 304) between the two channels of the stereophonic signal, and a second channel-reducing processing mode (T2) comprising filtering with re-phasing on a single one of the channels of the stereophonic signal according to an angle defined by the determined phase difference (303, 304) between the two channels of the stereophonic signal, selection of the first processing mode, and of the second processing mode, respectively, being dependent on the value of a phase indicator determined per frame (302). The invention also relates to a processing device for reducing channels implementing the method.

No. of Pages : 24 No. of Claims : 11

(12) PATENT APPLICATION PUBLICATION
(21) Application No.202517096049 A
(19) INDIA
(22) Date of filing of Application :06/10/2025
(43) Publication Date : 14/11/2025

(54) Title of the invention : BUSBAR ASSEMBLY AND BATTERY PACK INCLUDING SAME

(51) International classification	:H01M 50/591, H01M 50/588, H01M 50/503, H01M 10/42, H01M 50/502
(31) Priority Document No	:10-2023-0075855
(32) Priority Date	:13/06/2023
(33) Name of priority country	:Republic of Korea
(86) International Application No	:PCT/KR2024/002949
Filing Date	:07/03/2024
(87) International Publication No	:WO 2024/257997
(61) Patent of Addition to Application Number	:NA
Filing Date	:NA
(62) Divisional to Application Number	:NA
Filing Date	:NA

(71)**Name of Applicant :**
1)LG ENERGY SOLUTION, LTD.
Address of Applicant :Tower 1, 108, Yeoui-daero, Yeongdeungpo-gu, Seoul 07335 Republic of Korea
(72)**Name of Inventor :**
1)YUN, Sunwoo

(57) Abstract :
A busbar assembly according to an embodiment of the present invention comprises: a busbar which includes a body portion extending in a first direction and end portions disposed at both ends of the body portion in the first direction and having through-holes formed therein; and a protective cover which includes a cover portion for covering the busbar and a plurality of wing portions protruding from the body portion in a second direction which intersects the first direction.

No. of Pages : 24 No. of Claims : 11

(12) PATENT APPLICATION PUBLICATION
(21) Application No.202517096054 A
(19) INDIA
(22) Date of filing of Application :06/10/2025
(43) Publication Date : 14/11/2025

(54) Title of the invention : UNAVAILABILITY PERIOD SUPPORT FOR MUSIM DEVICES

(51) International classification	:H04W 60/04, H04W 88/06
(31) Priority Document No	:63/457515
(32) Priority Date	:06/04/2023
(33) Name of priority country	:U.S.A.
(86) International Application No	:PCT/US2024/022990
Filing Date	:04/04/2024
(87) International Publication No	:WO 2024/211514
(61) Patent of Addition to Application Number	:NA
Filing Date	:NA
(62) Divisional to Application Number	:NA
Filing Date	:NA

(71)**Name of Applicant :**
1)INTERDIGITAL PATENT HOLDINGS, INC.
Address of Applicant :200 Bellevue Parkway Suite 300 Wilmington, DE 19809 U.S.A.
(72)**Name of Inventor :**
1)SETHI, Anuj
2)STARSINIC, Michael
3)AHMAD, Saad
4)OLVERA-HERNANDEZ, Ulises

(57) Abstract :
The device may be a multi-universal subscriber identity module (MUSiM) device. The device may send a first registration request to a first network, for example, to enable an unavailability period feature with the second network. The registration request may indicate a first unavailability duration. The device may determine that an unavailability event is triggered. The device may determine that the device wiii be unavailable for a period of time. The device may receive a first registration response, for example, a first registration accept message. The first registration response may indicate a first registration duration. The device may determine a second unavailability duration. The device may send a second registration request to a second network, for example, indicate the second unavailability duration. The device may receive a second registration response. The second registration response may be a second registration accept message. The second registration response may indicate a second registration duration.

No. of Pages : 52 No. of Claims : 16

(12) PATENT APPLICATION PUBLICATION
(21) Application No.202518094458 A
(19) INDIA
(22) Date of filing of Application :01/10/2025
(43) Publication Date : 14/11/2025

(54) Title of the invention : CRYOPRESERVATION DEVICE WITH INTEGRATED TRACKING DEVICE CHAMBER

(51) International classification :A01N 1/02
(31) Priority Document No :18/136,419
(32) Priority Date :19/04/2023
(33) Name of priority country :U.S.A.
(86) International Application No :PCT/US2024/021859
Filing Date :28/03/2024
(87) International Publication No : NA
(61) Patent of Addition to Application Number :NA
Filing Date :NA
(62) Divisional to Application Number :202417068744
Filed on :11/09/2024

(71)**Name of Applicant :**
1)BIOTECH, INC.
Address of Applicant :5975 Shiloh Road, Suite 101, Alpharetta, Georgia 30005, USA U.S.A.
(72)**Name of Inventor :**
1)PARRA-ALMANZA, Jorge E.

(57) Abstract :
A cryopreservation device, the cryopreservation device comprising: a) an elongated stick comprising an RFID section, an elongated body, and a specimen collection tip, and b) a cap comprising a hollow chamber, wherein the hollow chamber has a length sufficient to accommodate the specimen collection tip; wherein the cap is capable of enclosing the specimen collection tip within the hollow chamber when the cap is removably attached to the elongated stick; wherein the RFID section is distal to the specimen collection tip and the RFID section comprises: a) an RFID chamber capable of holding an RFID tag, b) an RFID opening through which the RFID tag can be placed into the RFID chamber, and c) a locking mechanism abutting a circumference of the RFID opening; wherein a length of the RFID opening is along a longitudinal axis of the elongated stick and, wherein the locking mechanism comprises a circumferential flap bending inward towards the RFID chamber.

No. of Pages : 49 No. of Claims : 19

(12) PATENT APPLICATION PUBLICATION
(21) Application No.202517096891 A
(19) INDIA
(22) Date of filing of Application :08/10/2025
(43) Publication Date : 14/11/2025

(54) Title of the invention : TRIGGER PUMPS

(51) International classification :B05B 11/10
(31) Priority Document No :2305012.3
(32) Priority Date :04/04/2023
(33) Name of priority country :U.K.
(86) International Application No :PCT/EP2024/059253
Filing Date :04/04/2024
(87) International Publication No :WO 2024/209010
(61) Patent of Addition to Application Number :NA
Filing Date :NA
(62) Divisional to Application Number :NA
Filing Date :NA

(71)**Name of Applicant :**
1)OBRIST CLOSURES SWITZERLAND GMBH
Address of Applicant :Falkensteinerstrasse 2, CH-4153 4132 Muttenz Switzerland
(72)**Name of Inventor :**
1)SCHMIDT, Patrick
2)NATERSKY, Klaus
3)WILHELMS, Christian

(57) Abstract :
The invention relates to a trigger pump dispenser comprising - a main body, comprising - a pump chamber - an inlet port in communication with said pump chamber - an outlet port in communication with said pump chamber - an inlet valve seated between the pump chamber and the inlet port - a outlet valve seated between the pump chamber and the outlet port - a piston, seated in the pump chamber, for defining a variable volume in said pump chamber and movable between a retracted position of larger chamber volume and an inserted position of lesser chamber volume, - wherein the pump chamber has a conical shape.

No. of Pages : 11 No. of Claims : 13

(12) PATENT APPLICATION PUBLICATION
(21) Application No.202517096927 A
(19) INDIA
(22) Date of filing of Application :08/10/2025
(43) Publication Date : 14/11/2025

(54) Title of the invention : CREATING NEW ACCESS POINT CONNECTIONS PRIOR TO ROAM POINT IN WIRELESS NETWORK

(51) International classification	:H04W 36/18, H04W 36/02, H04W 84/12, H04W 36/30
(31) Priority Document No	:63/489301
(32) Priority Date	:09/03/2023
(33) Name of priority country	:U.S.A.
(86) International Application No	:PCT/US2024/018411
Filing Date	:04/03/2024
(87) International Publication No	:WO 2024/186770
(61) Patent of Addition to Application Number	:NA
Filing Date	:NA
(62) Divisional to Application Number	:NA
Filing Date	:NA

(71)**Name of Applicant :**
1)CISCO TECHNOLOGY, INC.
Address of Applicant :170 West Tasman Drive San Jose, California 95134 U.S.A.
(72)**Name of Inventor :**
1)HART, Brian Donald
2)SMITH, Malcolm Muir

(57) Abstract :
Method, system, and/or computer readable medium for roaming on a Wi-Fi network having a plurality of access points including: determining that a new AP actor provides a station (STA) actor enhanced characteristics as compared to an existing AP actor, wherein the enhanced characteristics include one or more of a stronger connection, lower congestion, and/or increased bandwidth; transferring required state from the existing AP actor to the new AP actor; and transferring at least some of data wherein the at least some data includes one or more of medium access control service data units (MSDUs), aggregated-MSDUs (A-MSDUs), medium access control protocol data units (MPDUs), and/or aggregated-MPDUs from the existing AP actors to the new AP actor.

No. of Pages : 20 No. of Claims : 19

(12) PATENT APPLICATION PUBLICATION
(21) Application No.202517096940 A
(19) INDIA
(22) Date of filing of Application :08/10/2025
(43) Publication Date : 14/11/2025

(54) Title of the invention : CATALYST, METHOD FOR PRODUCING CATALYST, AND METHOD FOR PRODUCING BIS (AMINOMETHYL) CYCLOHEXANE

(51) International classification	:B01J 23/58, B01J 37/02, B01J 37/16, C07B 61/00, C07C 209/72
(31) Priority Document No	:2023-058039
(32) Priority Date	:31/03/2023
(33) Name of priority country	:Japan
(86) International Application No	:PCT/JP2024/012867
Filing Date	:28/03/2024
(87) International Publication No	:WO 2024/204633
(61) Patent of Addition to Application Number	:NA
Filing Date	:NA
(62) Divisional to Application Number	:NA
Filing Date	:NA

(71)**Name of Applicant :**
1)MITSUBISHI GAS CHEMICAL COMPANY, INC.
Address of Applicant :5-2, Marunouchi 2-chome, Chiyoda-ku, Tokyo 1008324 Japan
(72)**Name of Inventor :**
1)TAKENAKA, Makoto
2)IIDA, Akifumi

(57) Abstract :
Provided is a catalyst that has hydrogenation ability and is for producing bis (aminomethyl) cyclohexane, wherein the catalyst has a desorption peak amount of 0.020 mmol/g-cat or less as measured by the following ammonia temperature-programmed desorption method. He gas is brought into contact with 150 mg of the catalyst at 500°C and at a gas flow rate of 20 sccm for 30 minutes. Next, a mixed gas containing 5 vol% NH3 and He as the remainder is brought into contact with the catalyst at 50°C and at a gas flow rate of 20 sccm for 10 minutes. Thereafter, while He gas is brought into contact with the catalyst at a gas flow rate of 20 sccm, the temperature is raised at 10°C/min, and the desorption peak is detected by a thermal conductivity detector.

No. of Pages : 32 No. of Claims : 18

(12) PATENT APPLICATION PUBLICATION
(21) Application No.202517096941 A
(19) INDIA
(22) Date of filing of Application :08/10/2025
(43) Publication Date : 14/11/2025

(54) Title of the invention : INK COMPOSITION FOR FLEXIBLE PACKAGING LAMINATES, PRINTED MATTER, LAMINATE, OR PACKAGE

(51) International classification	:C09D 11/102, B65D 65/42, C09D 11/02
(31) Priority Document No	:2023-108806
(32) Priority Date	:30/06/2023
(33) Name of priority country	:Japan
(86) International Application No	:PCT/JP2024/016603
Filing Date	:26/04/2024
(87) International Publication No	:WO 2025/004521
(61) Patent of Addition to Application Number	:NA
Filing Date	:NA
(62) Divisional to Application Number	:NA
Filing Date	:NA

(71)**Name of Applicant :**
1)DIC CORPORATION
Address of Applicant :35-58, Sakashita 3-chome, Itabashi-ku Tokyo 1748520 Japan
(72)**Name of Inventor :**
1)AOKI Ruri
2)ASAMI Tomomi
3)UCHIDA Shuma
4)EGAWA Kentaro

(57) Abstract :
The present disclosure provides an ink composition for flexible packaging laminates which is able to form ink layers excellent in terms of flowability, adhesion, blocking resistance, peel strength, and dry laminate strength. The ink composition for flexible packaging laminates contains a urethane resin (A) having a number-average molecular weight of 1,000-3,000 and formed using, as reaction starting materials, an organic diisocyanate compound (a1) and a polyol (a2) having a number-average molecular weight (Mn) of 700-900.

No. of Pages : 75 No. of Claims : 13

(12) PATENT APPLICATION PUBLICATION
(21) Application No.202517096987 A
(19) INDIA
(22) Date of filing of Application :08/10/2025
(43) Publication Date : 14/11/2025

(54) Title of the invention : NOVEL DEUTERATED POLYMERS FOR ELECTROCHEMICAL REACTIONS

(51) International classification	:C08G 73/06, C08G 10/00, C08J 5/22, C25B 13/08, C25B 1/04
(31) Priority Document No	:63/501915
(32) Priority Date	:12/05/2023
(33) Name of priority country	:U.S.A.
(86) International Application No	:PCT/US2024/028092
Filing Date	:07/05/2024
(87) International Publication No	:WO 2024/238192
(61) Patent of Addition to Application Number	:NA
Filing Date	:NA
(62) Divisional to Application Number	:NA
Filing Date	:NA

(71)**Name of Applicant :**
1)UOP LLC
Address of Applicant :25 East Algonquin Road P.O. Box 5017 Des Plaines, Illinois 60017-5017 U.S.A.
(72)**Name of Inventor :**
1)LIU, Chunqing
2)BRICKER, Jeffrey C.

(57) Abstract :
Deuterated anion exchange polymers, methods of making the deuterated anion exchange polymers, anion exchange membranes comprising the deuterated anion exchange polymers, and membrane electrode assemblies comprising the deuterated anion exchange polymers are described. The deuterated anion exchange polymers comprise a plurality of repeating units of formula (I).

No. of Pages : 42 No. of Claims : 3

(12) PATENT APPLICATION PUBLICATION
(21) Application No.202517096529 A
(19) INDIA
(22) Date of filing of Application :07/10/2025
(43) Publication Date : 14/11/2025

(54) Title of the invention : TRANSMISSION FOR A WIND TURBINE

(51) International classification	:F16H 25/06, F03D 15/00, F16H 57/04
(31) Priority Document No	:PA202370141
(32) Priority Date	:23/03/2023
(33) Name of priority country	:Denmark
(86) International Application No	:PCT/DK2024/050044
Filing Date	:11/03/2024
(87) International Publication No	:WO 2024/193776
(61) Patent of Addition to Application Number	:NA
Filing Date	:NA
(62) Divisional to Application Number	:NA
Filing Date	:NA

(71)**Name of Applicant :**
1)VESTAS WIND SYSTEMS A/S
Address of Applicant :Hedeager 42 8200 Aarhus N Denmark
(72)**Name of Inventor :**
1)PIEL, Daniel
2)BAGER, Christian
3)WEBER, Andreas

(57) Abstract :
A transmission comprises a fixed gear ring, a first drive member that defines a plurality of bores, each of which accommodates a tooth element. A second drive member extends within the first drive member, and defines a cam surface or profile which engages each of the plurality of tooth elements. A body region of the tooth elements comprises: a generally cylindrical first body portion proximate the tooth tip region, a generally cylindrical second body portion distal from the tooth tip region, wherein the first body portion and second body portion are spaced apart along a body axis (A), a reduced-mass portion intermediate the first and second body portions. The reduced mass portion comprises an external surface. An imaginary cylindrical surface extends between the generally cylindrical first body portion and the generally cylindrical second body portion, and wherein the external surface of the reduced mass portion shares less than 95% of its surface area with the imaginary cylindrical surface.

No. of Pages : 28 No. of Claims : 26

(12) PATENT APPLICATION PUBLICATION
(21) Application No.202517096530 A
(19) INDIA
(22) Date of filing of Application :07/10/2025
(43) Publication Date : 14/11/2025

(54) Title of the invention : LIQUID HOMOGENEOUS AGROCHEMICAL COMPOSITION OF INSECTICIDES

(51) International classification	:A01N 43/22, A01N 43/90, A01N 47/34, A01P 7/00, A01P 21/00
(31) Priority Document No	:63/454329
(32) Priority Date	:24/03/2023
(33) Name of priority country	:U.S.A.
(86) International Application No	:PCT/IL2024/050296
Filing Date	:21/03/2024
(87) International Publication No	:WO 2024/201452
(61) Patent of Addition to Application Number	:NA
Filing Date	:NA
(62) Divisional to Application Number	:NA
Filing Date	:NA

(71)**Name of Applicant :**
1)ADAMA MAKHTESHIM LTD.
Address of Applicant :P.O. Box 60 8410001 Beer-Sheva Israel
(72)**Name of Inventor :**
1)STERN, Nadya
2)DAHAN, Yogev

(57) Abstract :
The present invention relates to storage stable, liquid homogeneous agrochemical compositions comprising novaluron, emamectin, emamectin benzoate, abamectin, spinosad or the mixtures thereof, N- alkyl pyrrolidones, amides, and surfactants and methods of use such compositions for the control of pests in a field of crop and for regulating plant growth.

No. of Pages : 24 No. of Claims : 22

(12) PATENT APPLICATION PUBLICATION
(21) Application No.202517096531 A
(19) INDIA
(22) Date of filing of Application :07/10/2025
(43) Publication Date : 14/11/2025

(54) Title of the invention : EVENT-BASED IMAGE PROCESSING

(51) International classification	:H04N 25/47, G06T 7/13, G06T 7/246, G06V 20/54, G06V 20/56
(31) Priority Document No	:2023900771
(32) Priority Date	:20/03/2023
(33) Name of priority country	:Australia
(86) International Application No	:PCT/AU2024/050243
Filing Date	:19/03/2024
(87) International Publication No	:WO 2024/192467
(61) Patent of Addition to Application Number	:NA
Filing Date	:NA
(62) Divisional to Application Number	:NA
Filing Date	:NA

(71)**Name of Applicant :**
1)CUVOS PTY LTD
Address of Applicant :Suite 401, 478 George Street Sydney, New South Wales 2000 Australia
(72)**Name of Inventor :**
1)HAMILTON, Tara
2)ESSAM, Benjamin
3)NICHOLSON, Andrew

(57) Abstract :
Disclosed is an event-based image processing method. The method includes obtaining a time series of input signal data characterising information from an input source; applying a first stage of processing, wherein the first stage of processing comprises applying a compressive non-linearity to the input signal data; and applying a second stage of processing to an output from the first stage of processing. The second stage of processing comprises temporal and/or spatial processing in a feedback loop, to apply a high- or band-pass temporal filter and/or a high- or band-pass spatial filter to the output from the first stage of processing, to thereby suppress recurring changes, and improving an event to recurring change ratio in the output from the first stage of processing.

No. of Pages : 23 No. of Claims : 27

(12) PATENT APPLICATION PUBLICATION
(21) Application No.202517096532 A
(19) INDIA
(22) Date of filing of Application :07/10/2025
(43) Publication Date : 14/11/2025

(54) Title of the invention : PROCESS FOR PREPARING 5-FLUORO-4-IMINO-3-METHYL-1-(TOLUENE-4-SULFONYL)-3,4-DIHYDRO-1H-PYRIMIDIN-2-ONE

(51) International classification :C07D 239/47
(31) Priority Document No :63/454125
(32) Priority Date :23/03/2023
(33) Name of priority country :U.S.A.
(86) International Application No :PCT/IB2024/052730
Filing Date :21/03/2024
(87) International Publication No :WO 2024/194833
(61) Patent of Addition to Application Number :NA
Filing Date :NA
(62) Divisional to Application Number :NA
Filing Date :NA

(71)**Name of Applicant :**
1)ADAMA MAKHTESHIM LTD.
Address of Applicant :P.O. Box 60 8410001 Beer Sheva Israel
(72)**Name of Inventor :**
1)FORKOSH, Hagit
2)PEN, Liza

(57) Abstract :
The present invention provides a process for obtaining 5-fluoro-4-imino-3-methyl-1-(phenyl-4-sulfonyl)-3,4-dihydro-1H-pyrimidin-2- one having formula (I), wherein R is hydrogen, alkyl, alkenyl, alkynyl, alkoxy, haloalkyl, haloalkoxy, alkylthio, haloalkylthio, amino, alkylamino, dialkylamino, alkoxycarbonyl, alkyl carbonyl, hydroxyalkyl, ester, acid halogen, -SH, -OH, -NH2, -NO2, -CN or CF3.

No. of Pages : 122 No. of Claims : 43

(12) PATENT APPLICATION PUBLICATION
(21) Application No.202517096533 A
(19) INDIA
(22) Date of filing of Application :07/10/2025
(43) Publication Date : 14/11/2025

(54) Title of the invention : METHOD FOR INHIBITING THE NITRIFICATION PROCESS IN SOIL

(51) International classification	:C12N 15/113, C12N 9/06, C12N 9/02, C05G 3/00, C05G 3/90
(31) Priority Document No	:FR2303530
(32) Priority Date	:07/04/2023
(33) Name of priority country	:France
(86) International Application No	:PCT/FR2024/050451
Filing Date	:05/04/2024
(87) International Publication No	:WO 2024/209169
(61) Patent of Addition to Application Number	:NA
Filing Date	:NA
(62) Divisional to Application Number	:NA
Filing Date	:NA

(71)**Name of Applicant :**
1)AGRO INNOVATION INTERNATIONAL
Address of Applicant :18 avenue Franklin Roosevelt 35400 SAINT-MALO France
2)UNIVERSITE DE RENNES
3)CENTRE NATIONAL DE LA RECHERCHE SCIENTIFIQUE
(72)**Name of Inventor :**
1)FARAJZADEH, Davoud
2)ARKOUN, Mustapha
3)PLUCHON, Sylvain
4)MONARD, Cécile
5)EL AMRANI, Abdelhak
6)CLOSTRES, Emmanuel

(57) Abstract :
The invention relates to a method for inhibiting the nitrification process in soil, wherein one or more miRNAs are applied to the soil in order to inhibit the expression of one or more genes participating in the nitrification process in said soil, such as the genes encoding the AMO (ammonia monooxygenase) enzyme and/or the HAO (hydroxylamine oxidoreductase) enzyme.

No. of Pages : 20 No. of Claims : 15

(12) PATENT APPLICATION PUBLICATION
(21) Application No.202517096557 A
(19) INDIA
(22) Date of filing of Application :07/10/2025
(43) Publication Date : 14/11/2025

(54) Title of the invention : EXTERIOR MATERIAL FOR POWER STORAGE DEVICE, PRODUCTION METHOD FOR SAME, AND POWER STORAGE DEVICE

(51) International classification	:H01M 50/129, H01M 10/0562, H01M 50/105, H01M 50/119, H01M 50/121
(31) Priority Document No	:2023-046078
(32) Priority Date	:22/03/2023
(33) Name of priority country	:Japan
(86) International Application No	:PCT/JP2024/011518
Filing Date	:22/03/2024
(87) International Publication No	:WO 2024/195876
(61) Patent of Addition to Application Number	:NA
Filing Date	:NA
(62) Divisional to Application Number	:NA
Filing Date	:NA

(71)**Name of Applicant :**
1)DAI NIPPON PRINTING CO., LTD.
Address of Applicant :1-1, Ichigaya Kagacho 1-chome, Shinjuku-ku, Tokyo 1628001 Japan
(72)**Name of Inventor :**
1)FUJIKAWA, Ryuichi
2)OKANO, Ai

(57) Abstract :
Provided is an exterior material for a power storage device, the exterior material being configured from a laminate comprising at least a base material layer, a barrier layer, and a thermally fusible resin layer in this order from the outside. The thermally fusible resin layer includes a first layer containing homo-polybutylene terephthalate and a second layer containing copolymerized polybutylene terephthalate.

No. of Pages : 93 No. of Claims : 16

(12) PATENT APPLICATION PUBLICATION
(21) Application No.202517095269 A
(19) INDIA
(22) Date of filing of Application :03/10/2025
(43) Publication Date : 14/11/2025

(54) Title of the invention : WTRU ASSISTED SPATIAL ADAPTATION FOR NETWORK ENERGY SAVING

(51) International classification	:H04B 7/06, H04L 5/00
(31) Priority Document No	:63/457051
(32) Priority Date	:04/04/2023
(33) Name of priority country	:U.S.A.
(86) International Application No	:PCT/US2024/023039
Filing Date	:04/04/2024
(87) International Publication No	:WO 2024/211546
(61) Patent of Addition to Application Number	:NA
Filing Date	:NA
(62) Divisional to Application Number	:NA
Filing Date	:NA

(71)**Name of Applicant :**
1)INTERDIGITAL PATENT HOLDINGS, INC.
Address of Applicant :200 Bellevue Parkway Suite 300 Wilmington, DE 19809 U.S.A.
(72)**Name of Inventor :**
1)BALA, Erdem
2)MARINIER, Paul
3)LEE, Moon-Il
4)ALFARHAN, Faris
5)RAO, Jaya
6)SALIM, Umer

(57) Abstract :
Systems, methods, and instrumentalities are provided that are related to assisted spatial adaptation associated with network energy saving. A wireless transmit receive unit (WTRU) may receive a first CSI-RS and a second CSI-RS. The WTRU may determine an initial CSI-RS hypothesis. The initial CSI-RS hypothesis may be a first CSI-RS hypothesis associated with the first CSI-RS or a second CSI-RS hypothesis associated with the second CSI-RS. The WTRU may send an indication, to a network node, of a hypothesis index associated with the initial CSI-RS hypothesis. The WTRU may receive, via a downlink transmission, an indication of a transmission configuration indicator (TCI) state. The WTRU may determine a QCL source based on a CSI-RS hypothesis and the indicated TCI state. The CSI-RS hypothesis may be an indicated CSI-RS hypothesis indicated by network signaling or the initial CSI-RS hypothesis. The WTRU may decode a downlink channel based on the QCL source.

No. of Pages : 32 No. of Claims : 14

(12) PATENT APPLICATION PUBLICATION
(21) Application No.202517095271 A
(19) INDIA
(22) Date of filing of Application :03/10/2025
(43) Publication Date : 14/11/2025

(54) Title of the invention : SPACERS FOR GENE EXPRESSION CONSTRUCTS

(51) International classification	:C12N 15/63, C12N 15/85, C07K 16/00
(31) Priority Document No	:2350399-8
(32) Priority Date	:05/04/2023
(33) Name of priority country	:Sweden
(86) International Application No	:PCT/EP2024/058187
Filing Date	:27/03/2024
(87) International Publication No	:WO 2024/208673
(61) Patent of Addition to Application Number	:NA
Filing Date	:NA
(62) Divisional to Application Number	:NA
Filing Date	:NA

(71)**Name of Applicant :**
1)CYTIVA SWEDEN AB
Address of Applicant :Björkgatan 30 751 84 Uppsala Sweden
(72)**Name of Inventor :**
1)JONSSON, Andreas
2)IVANSSON, Daniel

(57) Abstract :
The invention provides a nucleic acid sequence comprising a modified CTCF-binding sequence represented by: TGCAGTACCTCCCTN1N2N3CCAGCAGGN4GGCAN5N6AGN7GAAN8GGTGAACTGGAGT (SEQ ID NO: 10) wherein N1, N2, N3, and N5 each independently is C or G; N4 is T or G; N6 and N7 each independently is C or T; and N8 is T or A. Each of N1 to N8 represents a nucleic acid substitution at a corresponding locus on the CTCF-binding site (SEQ ID NO: 1) of the wild-type chicken Hypersensitivity Site 4 (cHS4) insulator. Provided are also expression vectors and recombinant cells incorporating the modified CTCF-binding sequence, and an associated method of producing at least two polypeptides.

No. of Pages : 25 No. of Claims : 22

(12) PATENT APPLICATION PUBLICATION
(21) Application No.202517095273 A
(19) INDIA
(22) Date of filing of Application :03/10/2025
(43) Publication Date : 14/11/2025

(54) Title of the invention : POLARIZATION INTERFERENCE MEASUREMENT AND REPORTING USING POLARIZED REFERENCE SIGNALS

(51) International classification :H04B 7/10
(31) Priority Document No :63/457038
(32) Priority Date :04/04/2023
(33) Name of priority country :U.S.A.
(86) International Application No :PCT/US2024/022926
Filing Date :04/04/2024
(87) International Publication No :WO 2024/211473
(61) Patent of Addition to Application Number :NA
Filing Date :NA
(62) Divisional to Application Number :NA
Filing Date :NA

(71)**Name of Applicant :**
1)INTERDIGITAL PATENT HOLDINGS, INC.
Address of Applicant :200 Bellevue Parkway Suite 300 Wilmington, DE 19809 U.S.A.
(72)**Name of Inventor :**
1)COMSA, Virgil
2)HAGHIGHAT, Afshin
3)CANONNE-VELASQUEZ, Loic
4)PARK, Jonghyun

(57) Abstract :
Systems, methods, and instrumentalities are configured to polarization interference measurement and reporting using polarized reference signals. A Wireless Transmit/Receive Unit (WTRU) may receive configuration information for Channel State Information Reference Signal (CSI-RS) measurements, including two polarization indices related to different polarization types. Upon receiving a trigger, for example, through downlink control information (DCI), the WTRU may perform and report CSI-RS measurements based on the polarization types. The WTRU may determine the polarization-based CSI-RS measurement using the configuration and polarization type indicated in the reporting information, and send such data to a network. The measurements may be based on the polarization indices in the reporting information.

No. of Pages : 42 No. of Claims : 14

(12) PATENT APPLICATION PUBLICATION
(21) Application No.202517095305 A
(19) INDIA
(22) Date of filing of Application :03/10/2025
(43) Publication Date : 14/11/2025

(54) Title of the invention : METHOD FOR PRODUCING LOW-CARBON HYDROGEN FROM AMMONIA THROUGH AMMONIA CRACKING "AMMONIA CRACKING TECHNOLOGY-3000" AND A PLANT FOR ITS IMPLEMENTATION

(51) International classification	:C01B 3/04, C01B 5/00, C01B 3/56
(31) Priority Document No	:2023118596
(32) Priority Date	:13/07/2023
(33) Name of priority country	:Russia
(86) International Application No	:PCT/RU2024/000008
Filing Date	:12/01/2024
(87) International Publication No	:WO 2025/014390
(61) Patent of Addition to Application Number	:NA
Filing Date	:NA
(62) Divisional to Application Number	:NA
Filing Date	:NA

(71)**Name of Applicant :**
1)PUBLICHNOE AKTSIONERNOE OBSHCHESTVO "NOVATEK"
Address of Applicant :ul. Pobedy, 22a Tyumenskaya obl., Yamalo-Nenetskiy avtonomnyy okrug, Purovskiy r-n, Tarko-Sale, 629850 Russia
(72)**Name of Inventor :**
1)RUDENKO, Sergei Vladimirovich
2)FEDOSEEV, Pavel Olegovich
3)RAZIAPOV, Timir Emilievich
4)TSEPKOV, Aleksei Ivanovich
5)SEDAVNYKH, Dmitrii Nikolaevich
6)NIKULIN, Stanislav Aleksandrovich

(57) Abstract :
Claimed are a method for producing hydrogen from ammonia and a plant for the implementation thereof. Liquid ammonia feedstock is heated, evaporated and superheated in a coil of a heat-reclaiming module. The gaseous ammonia feedstock is fed into an ammonia cracking reactor, the obtained nitrogen-hydrogen mixture is cooled in an air-cooling unit, and hydrogen is recovered. Liquid ammonia fuel is heated, evaporated and superheated. The gaseous ammonia fuel is mixed with the vent gases produced during the recovery of hydrogen, and the obtained fuel gas is fed together with heated air into the ammonia cracking reactor. The evaporation and superheating of the ammonia feedstock and the ammonia fuel are carried out in recuperative heat exchangers. An outlet for the flue gases of the ammonia cracking reactor is connected to the heat-reclaiming module. Arranged in series inside the heat-reclaiming module are coils for heating gaseous ammonia, fuel gas, air, a heat transfer agent, and liquid ammonia. The pressure of the flue gases is increased, the flue gases are cooled, and condensed distilled water is recovered in a separator, with the dewatered flue gases being released into the atmosphere. The invention makes it possible to increase the efficiency of low-carbon hydrogen production and to obtain an additional product in the form of distilled water.

No. of Pages : 8 No. of Claims : 12

(12) PATENT APPLICATION PUBLICATION
(19) INDIA
(22) Date of filing of Application :01/10/2025
(21) Application No.202518094745 A
(43) Publication Date : 14/11/2025

(54) Title of the invention : USER INTERFACE FOR MANIPULATING USER INTERFACE OBJECTS WITH MAGNETIC PROPERTIES

(51) International classification	:G06F 3/0362, G04G 21/00
(31) Priority Document No	:61/873,356
(32) Priority Date	:03/09/2013
(33) Name of priority country	:U.S.A.
(86) International Application No	:PCT/US2014/053961
Filing Date	:03/09/2014
(87) International Publication No	: NA
(61) Patent of Addition to Application Number	:NA
Filing Date	:NA
(62) Divisional to Application Number	:202218025053
Filed on	:28/04/2022

(71)**Name of Applicant :**
1)APPLE INC.
Address of Applicant :One Apple Park Way, Cupertino, California 95014, United States of America U.S.A.
(72)**Name of Inventor :**
1)ZAMBETTI, Nicholas
2)CHAUDHRI, Imran
3)DASCOLA, Jonathan, R.
4)DYE, Alan, C.
5)FOSS, Christopher, Patrick
6)GUZMAN, Aurelio
7)KARUNAMUNI, Chanaka, G.
8)KERR, Duncan, Robert
9)WILSON, Christopher
10)WILSON, Eric, Lance
11)YANG, Lawrence, Y.
12)BUTCHER, Gary, Ian
13)DE VRIES, Nathan
14)IVE, Jonathan, P.

(57) Abstract :
The present disclosure relates to user interfaces for manipulating user interface objects. A device, including a display and a rotatable input mechanism, is 5 described in relation to manipulating user interface objects. In some examples, the manipulation of the object is a scroll, zoom, or rotate of the object. In other examples, objects are selected in accordance with simulated magnetic properties. To be Published with Figure 6C 10 140

No. of Pages : 216 No. of Claims : 16

(12) PATENT APPLICATION PUBLICATION
(21) Application No.202518094748 A
(19) INDIA
(22) Date of filing of Application :01/10/2025
(43) Publication Date : 14/11/2025

(54) Title of the invention : TECHNIQUES OF BEAMFORMING IN REFERENCE SIGNAL (RS) TRANSMISSIONS

(51) International classification	:H04W 74/08, H04W 16/14
(31) Priority Document No	:NA
(32) Priority Date	:NA
(33) Name of priority country	:NA
(86) International Application No	:PCT/CN2020/121212
Filing Date	:15/10/2020
(87) International Publication No	: NA
(61) Patent of Addition to Application Number	:NA
Filing Date	:NA
(62) Divisional to Application Number	:202317023970
Filed on	:30/03/2023

(71)**Name of Applicant :**
1)APPLE INC.
Address of Applicant :One Apple Park Way Cupertino, California 95014, United States of America U.S.A.
(72)**Name of Inventor :**
1)NIU, Huaning
2)YE, Chunxuan
3)ZHANG, Dawei
4)SUN, Haitong
5)HE, Hong
6)OTERI, Oghenekome
7)YE, Sigen
8)ZENG, Wei
9)YANG, Weidong
10)ZHANG, Yushu

(57) Abstract :
Techniques of beamforming in reference signal (RS) transmissions, applicable to frequency ranges including frequencies between 52.6 GHz and 71 5 GHz, are described. Such techniques may include determining a communication channel is unoccupied for an initial duration, determining a number of communication slots of the communication channel to defer for transmission, and counting one or more communication slots of the communication channel that are not in use. The techniques may include 10 determining the number of counted one or more communication slots is not equal to the determined number of communication slots of the communication channel to defer, and transmitting one or more data units based on the determination that the number of the counted one or more communication slots is not equal to the determined number of communication slots of the 15 communication channel to defer. 58

No. of Pages : 67 No. of Claims : 21

(12) PATENT APPLICATION PUBLICATION
(21) Application No.202518094756 A
(19) INDIA
(22) Date of filing of Application :01/10/2025
(43) Publication Date : 14/11/2025

(54) Title of the invention : METHOD AND APPARATUS FOR DETERMINING FOR THE COMPRESSION OF AN HOA DATA FRAME REPRESENTATION A LOWEST INTEGER NUMBER OF BITS REQUIRED FOR REPRESENTING NON-DIFFERENTIAL GAIN VALUES

(51) International classification :G10L 19/008
(31) Priority Document No :14306023.4
(32) Priority Date :27/06/2014
(33) Name of priority country :EPO
(86) International Application No :PCT/EP2015/063912
Filing Date :22/06/2015
(87) International Publication No : NA
(61) Patent of Addition to Application Number :NA
Filing Date :NA
(62) Divisional to Application Number :202318090023
Filed on :29/12/2023

(71)**Name of Applicant :**
1)DOLBY INTERNATIONAL AB
Address of Applicant :Apollo Building 3E Herikerbergweg 1-35 NL-1101 CN Amsterdam Zuid-Oost, Netherlands Netherlands
(72)**Name of Inventor :**
1)KORDON, Sven
2)KRUEGER, Alexander

(57) Abstract :
When compressing an HOA data frame representation, a gain control (15, 151) is applied for each channel signal before it is perceptually encoded (16). The gain values are transferred in a differential manner as side information. However, for starting decoding of such streamed compressed HOA data frame representation absolute gain values are required, which should be coded with a minimum number of bits. For determining such lowest integer number (β e) of bits the HOA data frame representation (C(k)) is rendered in spatial domain to virtual loudspeaker signals lying on a unit sphere, followed by normalisation of the HOA data frame representation (C(k)). Then the lowest integer number of bits is set to: (AA).

No. of Pages : 46 No. of Claims : 12

(12) PATENT APPLICATION PUBLICATION
(21) Application No.202518095092 A
(19) INDIA
(22) Date of filing of Application :03/10/2025
(43) Publication Date : 14/11/2025

(54) Title of the invention : ELECTRODE ASSEMBLY AND BATTERY, AND BATTERY PACK AND VEHICLE COMPRISING SAME

(51) International classification	:H01M 50/583, H01M 50/538, H01M 50/586, H01M 50/533, H01M 10/04
(31) Priority Document No	:10-2021-0007278
(32) Priority Date	:19/01/2021
(33) Name of priority country	:Republic of Korea
(86) International Application No	:PCT/KR2022/001005
Filing Date	:19/01/2022
(87) International Publication No	: NA
(61) Patent of Addition to Application Number	:NA
Filing Date	:NA
(62) Divisional to Application Number	:202317047383
Filed on	:14/07/2023

(71)**Name of Applicant :**
1)LG ENERGY SOLUTION, LTD.
Address of Applicant :Tower1, 108, Yeoui-daero, Yeongdeungpo-gu, Seoul 07335, KR Republic of Korea
(72)**Name of Inventor :**
1)PARK, Jong-Sik
2)LIM, Jae-Won
3)CHOE, Yu-Sung
4)KIM, Hak-Kyun
5)LEE, Je-Jun
6)LEE, Byoung-Gu
7)RYU, Duk-Hyun
8)LEE, Kwan-Hee
9)LEE, Jae-Eun
10)PARK, Pil-Kyu
11)HWANGBO, Kwang-Su
12)KIM, Do-Gyun
13)MIN, Geon-Woo
14)LIM, Hae-Jin
15)JO, Min-Ki
16)CHOI, Su-Ji
17)KANG, Bo-Hyun
18)KIM, Jae-Woong
19)JUNG, Ji-Min
20)KONG, Jin-Hak
21)LEE, Soon-O
22)CHOI, Kyu-Hyun

(57) Abstract :
Disclosed is an electrode assembly, a battery, and a battery pack and a vehicle including the same. In the electrode assembly, a first electrode, a second electrode, and a separator interposed therebetween are wound based on a winding axis to define a core and an outer circumference. The first electrode includes a first active material portion coated with an active material layer and a first uncoated portion not coated with an active material layer along a winding direction. At least a part of the first uncoated portion is defined as an electrode tab by itself. The first uncoated portion includes a first portion adjacent to the core of the electrode assembly, a second portion adjacent to the outer circumference of the electrode assembly, and a third portion interposed between the first portion and the second portion. The first portion or the second portion has a smaller height than the third portion in the winding axis direction.

No. of Pages : 257 No. of Claims : 158

(12) PATENT APPLICATION PUBLICATION
(21) Application No.202518095892 A
(19) INDIA
(22) Date of filing of Application :06/10/2025
(43) Publication Date : 14/11/2025

(54) Title of the invention : "MANUFACTURE OF SURFACE RELIEF STRUCTURES"

(51) International classification :G02B 5/18
(31) Priority Document No :1911981.7
(32) Priority Date :21/08/2019
(33) Name of priority country :U.K.
(86) International Application No :PCT/GB2020/051997
Filing Date :20/08/2020
(87) International Publication No : NA
(61) Patent of Addition to Application Number :NA
Filing Date :NA
(62) Divisional to Application Number :202217008644
Filed on :18/02/2022

(71)**Name of Applicant :**
1)Snap, Inc.
Address of Applicant :3000 31st Street, Santa Monica, CA 90405 U.S.A.
(72)**Name of Inventor :**
1)STURLAND, Ian
2)VENABLES, Mark
3)HAWKE, Tracey
4)MILLS, Rory
5)MACKEN, Ian

(57) Abstract :
The present invention relates to a method and apparatus for the etching of variable depth features in a substrate is described. Movement of the substrate relative to an etchant (e.g. into or out of the etchant) during the etching process is utilised to provide a varying etch time, and hence depth, across the substrate, and in various examples this is enabled without requiring a varying mask.

No. of Pages : 28 No. of Claims : 20

(12) PATENT APPLICATION PUBLICATION
(21) Application No.202517095321 A
(19) INDIA
(22) Date of filing of Application :03/10/2025
(43) Publication Date : 14/11/2025

(54) Title of the invention : FRICTION CLUTCH

(51) International classification	:F16D 21/06, F16D 13/38
(31) Priority Document No	:10 2023 108 706.1
(32) Priority Date	:05/04/2023
(33) Name of priority country	:Germany
(86) International Application No	:PCT/DE2024/100153
Filing Date	:26/02/2024
(87) International Publication No	:WO 2024/208389
(61) Patent of Addition to Application Number	:NA
Filing Date	:NA
(62) Divisional to Application Number	:NA
Filing Date	:NA

(71)**Name of Applicant :**
1)SCHAEFFLER TECHNOLOGIES AG & CO. KG
Address of Applicant :Industriestraße 1-3 91074 Herzogenaurach Germany
(72)**Name of Inventor :**
1)AHNERT, Gerd
2)OBITZ, Alexander
3)TAGUNOV, Dmitrij

(57) Abstract :
The invention relates to a friction clutch (1) comprising a housing (2), a counter-pressure plate (6) secured to the housing, a pressure plate (4) which can be moved to a limited extent in the axial direction (A) of the friction clutch (1), multiple actuating devices (5), a spring mechanism (15) and a clutch disc (3), wherein, in an engaged state of the friction clutch (1), the clutch disc (3) is frictionally clamped between the counter-pressure plate (6) and the pressure plate (4) by a force generated by the spring mechanism (15), wherein, in a disengaged state of the friction clutch (1), the pressure plate (4) is separated from the clutch disc (3) via the actuating devices (5) against the force generated by the spring mechanism (15), wherein each of the actuating devices (5) has a respective actuating lever (9) and an intermediate lever (10), wherein an outer end (11) of the actuating lever (9) in the radial direction (R) of the friction clutch (1) is rotatably secured to the housing (2) via an actuating bearing (16), wherein the intermediate lever (10) has a radially (R) outer first end (13) and a radially (R) inner second end (14), wherein the intermediate lever (10) acts on the pressure plate (4) at the first end (13) and engages on the counter-pressure plate (6) at the second end (14), wherein the intermediate lever (10) is rotatably secured to the actuating lever (9) via an intermediate bearing (17), and wherein a first lever section (18) of the intermediate lever (10), which extends in the radial direction (R) between the intermediate bearing (17) and the first end (13), is further away from the pressure plate (4) in the axial direction (A) than the actuating bearing (16).

No. of Pages : 11 No. of Claims : 10

(12) PATENT APPLICATION PUBLICATION
(21) Application No.202517095396 A
(19) INDIA
(22) Date of filing of Application :04/10/2025
(43) Publication Date : 14/11/2025

(54) Title of the invention : APPARATUS AND METHOD FOR CELL RESELECTION IN A WIRELESS COMMUNICATION SYSTEM

(51) International classification	:H04W 48/20, H04W 24/08, H04W 24/10
(31) Priority Document No	:202310370585.5
(32) Priority Date	:07/04/2023
(33) Name of priority country	:China
(86) International Application No	:PCT/KR2024/004595
Filing Date	:08/04/2024
(87) International Publication No	:WO 2024/210663
(61) Patent of Addition to Application Number	:NA
Filing Date	:NA
(62) Divisional to Application Number	:NA
Filing Date	:NA

(71)**Name of Applicant :**
1)SAMSUNG ELECTRONICS CO., LTD.
Address of Applicant :129, Samsung-ro, Yeongtong-gu, Suwon-si, Gyeonggi-do 16677 Republic of Korea
(72)**Name of Inventor :**
1)FU, Yanze
2)QIU, Haijie

(57) Abstract :
The disclosure relates to a 5G or 6G communication system for supporting a higher data transmission rate. The present application provides methods performed by a terminal and a base station in a wireless communication system, a terminal, and a base station. In an aspect, a method performed by a terminal in a wireless communication system includes: receiving first information from a base station of a serving cell of a first type, the first information includes location-related information of the serving cell and information of a neighbouring cell of a second type; and measuring the neighbouring cell of the second type based on a UE location and the location-related information of the serving cell.

No. of Pages : 28 No. of Claims : 15

(12) PATENT APPLICATION PUBLICATION
(21) Application No.202517095442 A
(19) INDIA
(22) Date of filing of Application :04/10/2025
(43) Publication Date : 14/11/2025

(54) Title of the invention : MARINE FLOATING BODY, AND MARINE FLOATING BODY ARRAY WITH WAVE PROTECTION WALL AND WIND PROTECTION METHOD USING SAME

(51) International classification	:B63B 35/44, B63B 43/10, B63B 43/04, B63B 21/50, H02S 10/40
(31) Priority Document No	:202310262978.4
(32) Priority Date	:17/03/2023
(33) Name of priority country	:China
(86) International Application No	:PCT/CN2023/139160
Filing Date	:15/12/2023
(87) International Publication No	:WO 2024/193130
(61) Patent of Addition to Application Number	:NA
Filing Date	:NA
(62) Divisional to Application Number	:NA
Filing Date	:NA

(71)**Name of Applicant :**
1)BIOHAVEN ENVIRONMENTAL SOLUTIONS (ZHEJIANG) CO., LTD.
Address of Applicant :No. 2, Fengxi Middle Road, Yong'an Industrial Zone, Xianju County Taizhou, Zhejiang 317306 China
(72)**Name of Inventor :**
1)XU, Yunyou
2)XU, Weiteng
3)HE, Xin
4)GU, Huiya
5)XU, Danping
6)WANG, Mixue

(57) Abstract :
A marine floating body, and a marine floating body array with a wave protection wall and a wind protection method using same. The marine floating body can float on the surface of the sea, and comprises an air chamber (1), and a wall face enclosing the air chamber (1), wherein the wall face comprises a top face (11) and a side face (12), a photovoltaic assembly being fixedly mounted above the top face (11), and a one-way air intake valve (2) being provided on the side face (12).

No. of Pages : 21 No. of Claims : 10

(12) PATENT APPLICATION PUBLICATION
(21) Application No.202517095463 A
(19) INDIA
(22) Date of filing of Application :04/10/2025
(43) Publication Date : 14/11/2025

(54) Title of the invention : MECHANICAL ADVANTAGE CONTACT OPENING MECHANISM FOR CIRCUIT INTERRUPTERS

(51) International classification :H01H 33/666
(31) Priority Document No :63/462616
(32) Priority Date :28/04/2023
(33) Name of priority country :U.S.A.
(86) International Application No :PCT/IB2024/054012
Filing Date :24/04/2024
(87) International Publication No :WO 2024/224318
(61) Patent of Addition to Application Number :NA
Filing Date :NA
(62) Divisional to Application Number :NA
Filing Date :NA

(71)**Name of Applicant :**
1)EATON INTELLIGENT POWER LIMITED
Address of Applicant :30 Pembroke Road Dublin, 4 Ireland
(72)**Name of Inventor :**
1)HOLP, Tyler
2)ROHN, David R.

(57) Abstract :
An actuator for a circuit interrupter utilizes a lever to open the separable contacts of each pole assembly. The lever is coupled at a first end to a conductive plate of a Thomson coil arrangement and coupled at a second end to a movable electrode stem. The lever rotates about a pivot, and the pivot is positioned closer to the first end of the lever than the second end. The distance L1 between the first end of the lever and the pivot is shorter than the distance L2 between the pivot and the second end. When the movable electrode stem is in the closed state and the Thomson coil is activated, the conductive plate moves away from the Thomson coil at a velocity v1, and the movable electrode stem separates from the fixed electrode stem at a velocity v2 that is greater than v1 by a factor of L2/L1.

No. of Pages : 13 No. of Claims : 16

(12) PATENT APPLICATION PUBLICATION

(21) Application No.202518096489 A

(19) INDIA

(22) Date of filing of Application :07/10/2025

(43) Publication Date : 14/11/2025

(54) Title of the invention : METHOD AND SYSTEM FOR GENERATING A DYNAMIC CARD VERIFICATION VALUE FOR PROCESSING A TRANSACTION

(51) International classification	:G06Q 20/34, G06Q 20/32
(31) Priority Document No	:63/115,888
(32) Priority Date	:19/11/2020
(33) Name of priority country	:U.S.A.
(86) International Application No	:PCT/US2021/059607
Filing Date	:17/11/2021
(87) International Publication No	: NA
(61) Patent of Addition to Application Number	:NA
Filing Date	:NA
(62) Divisional to Application Number	:202317032157
Filed on	:05/05/2023

(71)**Name of Applicant :**

1)COMPOSECURE, LLC

Address of Applicant :500 Memorial Drive Somerset, New Jersey 08873, United States of America U.S.A.

(72)**Name of Inventor :**

1)LOWE, Adam

2)NUZUM, Todd

(57) Abstract :

Systems, methods, transaction cards, mobile devices, processors, and computer memory programmed with machine-readable instructions, for providing a dynamic Card Verification Value (dCVV) to a user of a transaction card. A mobile device associated with the user and with the transaction card 10 initiates a non-payment near field communication (NFC) with the transaction card, receives a message from the transaction card in the non-payment NFC communication, transmits a prompt to an IP address or web address over a global computer information network, and receives a secure communication from containing the dCVV from a server accessible from the IP address or web 15 address in response to the prompt. The dCVV code is then provided to the user. In embodiments, the non-payment NFC may be initiated via a card tap, a user interface, or a communication from a website. To Be Published with FIG. 1 20

No. of Pages : 22 No. of Claims : 10

(12) PATENT APPLICATION PUBLICATION
(21) Application No.202518096701 A
(19) INDIA
(22) Date of filing of Application :07/10/2025
(43) Publication Date : 14/11/2025

(54) Title of the invention : ON-DEMAND MEMORY ALLOCATION

(51) International classification	:G06F 12/1009, G06F 12/1018, G06F 12/1027
(31) Priority Document No	:16/804,128
(32) Priority Date	:28/02/2020
(33) Name of priority country	:U.S.A.
(86) International Application No	:PCT/US2021/019353
Filing Date	:24/02/2021
(87) International Publication No	: NA
(61) Patent of Addition to Application Number	:NA
Filing Date	:NA
(62) Divisional to Application Number	:202217047106
Filed on	:18/08/2022

(71)**Name of Applicant :**
1)APPLE INC.
Address of Applicant :One Apple Park Way Cupertino, California 95014, United States of America U.S.A.
(72)**Name of Inventor :**
1)HENSLEY, Justin A.
2)MANN, Karl D.
3)FOO, Yoong Chert
4)POTTER, Terence M.
5)LILJEROS, Frank W.
6)TAYLOR, Ralph C.

(57) Abstract :
Techniques are disclosed relating to dynamically allocating and mapping private memory for requesting circuitry (210). Disclosed circuitry (220) may receive a private address and translate the private address to a virtual address (which an MMU (230) may then translate to 5 physical address to actually access a storage element (240)). In some embodiments, private memory allocation circuitry (220) is configured to generate page table information and map private memory pages for requests if the page table information is not already setup. In various embodiments, this may advantageously allow dynamic private memory allocation, e g., to efficiently allocate memory for graphics shaders with different types of workloads. 10 Disclosed caching techniques for page table information may improve performance relative to traditional techniques. Further, disclosed embodiments may facilitate memory consolidation across a device such as a graphics processor. 25

No. of Pages : 33 No. of Claims : 16

(12) PATENT APPLICATION PUBLICATION
(21) Application No.202517095501 A
(19) INDIA
(22) Date of filing of Application :04/10/2025
(43) Publication Date : 14/11/2025

(54) Title of the invention : CONFIGURING FREQUENCY HOPS WITHIN A REFERENCE SIGNAL TRANSMISSION

(51) International classification	:H04L 5/00	
(31) Priority Document No	:20230100393	
(32) Priority Date	:15/05/2023	
(33) Name of priority country	:Greece	
(86) International Application No	:PCT/US2024/028636	
Filing Date	:09/05/2024	
(87) International Publication No	:WO 2024/238284	
(61) Patent of Addition to Application Number	:NA	
Filing Date	:NA	
(62) Divisional to Application Number	:NA	
Filing Date	:NA	

(71)**Name of Applicant :**
1)QUALCOMM INCORPORATED
Address of Applicant :ATTN: International IP Administration 5775 Morehouse Drive San Diego, California 92121-1714 U.S.A.
(72)**Name of Inventor :**
1)MANOLAKOS, Alexandros
2)RYU, Jae Ho
3)AKKARAKARAN, Sony

(57) Abstract :
An example apparatus for wireless communication by user equipment (UE), the apparatus including one or more transceivers, one or more memories, and one or more processors communicatively coupled with the one or more transceivers and the one or more memories, wherein the one or more processors are configured to:: receive a configuration for a transmission of a reference signal for positioning, the reference signal comprising a plurality of frequency hops, determine an available opportunity for a frequency hop of the plurality of frequency hops within the reference signal, wherein the available opportunity corresponds to a plurality of consecutive orthogonal frequency division multiplexing (OFDM) symbols within which the UE may transmit the frequency hop, and transmit the plurality of frequency hops within the available opportunity of the reference signal.

No. of Pages : 59 No. of Claims : 30

(12) PATENT APPLICATION PUBLICATION
(21) Application No.202517097001 A
(19) INDIA
(22) Date of filing of Application :08/10/2025
(43) Publication Date : 14/11/2025

(54) Title of the invention : POWER STORAGE DEVICE AND PROTECTIVE MEMBER FOR POWER STORAGE DEVICE

(51) International classification	:H01M 50/105, H01G 11/78, H01M 50/124, H01M 50/147, H01M 50/148
(31) Priority Document No	:2023-054425
(32) Priority Date	:29/03/2023
(33) Name of priority country	:Japan
(86) International Application No	:PCT/JP2024/013387
Filing Date	:29/03/2024
(87) International Publication No	:WO 2024/204834
(61) Patent of Addition to Application Number	:NA
Filing Date	:NA
(62) Divisional to Application Number	:NA
Filing Date	:NA

(71)**Name of Applicant :**
1)DAI NIPPON PRINTING CO., LTD.
Address of Applicant :1-1, Ichigaya Kagacho 1-chome, Shinjuku-ku, Tokyo 1628001 Japan
(72)**Name of Inventor :**
1)MIYASHIRO, Kae
2)URIU, Toshibumi
3)KANAZAWA, Sayako
4)SASAKI, Miho

(57) Abstract :
This power storage device comprises: an electrode body having a three-dimensional shape including ridge lines; an exterior film covering at least one of the ridge lines and wrapping around the electrode body; and a protective member that is disposed outside of the electrode body and runs along at least one of the ridge lines.

No. of Pages : 45 No. of Claims : 6

(12) PATENT APPLICATION PUBLICATION
(21) Application No.202517097002 A
(19) INDIA
(22) Date of filing of Application :08/10/2025
(43) Publication Date : 14/11/2025

(54) Title of the invention : SOLAR MODULE COUPLINGS FOR SOLAR TRACKER

(51) International classification	:H02S 20/32, F24S 30/422
(31) Priority Document No	:63/457294
(32) Priority Date	:05/04/2023
(33) Name of priority country	:U.S.A.
(86) International Application No	:PCT/US2024/022951
Filing Date	:04/04/2024
(87) International Publication No	:WO 2024/211489
(61) Patent of Addition to Application Number	:NA
Filing Date	:NA
(62) Divisional to Application Number	:NA
Filing Date	:NA

(71)**Name of Applicant :**
1)NEXTRACKER LLC
Address of Applicant :6200 Paseo Padre Parkway Fremont, California 94555 U.S.A.
(72)**Name of Inventor :**
1)DELGADO-NANEZ, Ricardo

(57) Abstract :
A coupling for use with a solar tracker includes an elongate body defining opposed top and bottom surfaces, the bottom surface defining a pair of protuberances disposed in spaced relation along a length of the elongate body and defining a gap therebetween, each of the pair of protuberances including a tab disposed thereon adjacent the gap, wherein the gap is configured to receive a torque tube such that an inner surface of the gap and the tabs of each of the pair of protuberances abut a portion of the torque tube, wherein each tab of the pair of protuberances includes a bore defined therethrough that is configured to receive a fastener to couple the elongate body to a torque tube.

No. of Pages : 15 No. of Claims : 20

(12) PATENT APPLICATION PUBLICATION
(21) Application No.202517097009 A
(19) INDIA
(22) Date of filing of Application :08/10/2025
(43) Publication Date : 14/11/2025

(54) Title of the invention : NOVEL PD-L1 INHIBITORS

(51) International classification	:C07D 471/04, A61K 31/437, A61P 35/00
(31) Priority Document No	:23382280.8
(32) Priority Date	:24/03/2023
(33) Name of priority country	:EPO
(86) International Application No	:PCT/EP2024/057862
Filing Date	:22/03/2024
(87) International Publication No	:WO 2024/200308
(61) Patent of Addition to Application Number	:NA
Filing Date	:NA
(62) Divisional to Application Number	:NA
Filing Date	:NA

(71)**Name of Applicant :**
1)AFFIRMA BIOTECH S. L.
Address of Applicant :Sant Pau Recinte Modernista, Pavelló Sant Manel C. Sant Antoni Maria Claret 167 08025 Barcelona Spain
(72)**Name of Inventor :**
1)BERGES FRAILE, Maria Isabel
2)ALMANSA ROSALES, Carmen
3)BASU, Sujay

(57) Abstract :
The present invention relates to compounds for modulating PD-1/PD-L1 protein/protein interaction that are useful in the treatment of various diseases associated with over-expression of PD-1/PD-L1, including infectious diseases and cancer. The invention additionally relates to compositions comprising such compounds as well as to their uses.

No. of Pages : 174 No. of Claims : 16

(12) PATENT APPLICATION PUBLICATION
(21) Application No.202517097189 A
(19) INDIA
(22) Date of filing of Application :08/10/2025
(43) Publication Date : 14/11/2025

(54) Title of the invention : COATING COMPOSITION AND COATED TABLET

(51) International classification	:A61K 9/28, A61K 47/32
(31) Priority Document No	:23162076.6
(32) Priority Date	:15/03/2023
(33) Name of priority country	:EPO
(86) International Application No	:PCT/EP2024/056865
Filing Date	:14/03/2024
(87) International Publication No	:WO 2024/189162
(61) Patent of Addition to Application Number	:NA
Filing Date	:NA
(62) Divisional to Application Number	:NA
Filing Date	:NA

(71)**Name of Applicant :**
1)BASF SE
Address of Applicant :Carl-Bosch-Straße 38 67056 Ludwigshafen am Rhein Germany
(72)**Name of Inventor :**
1)AGNESE, Thorsten
2)CECH, Thorsten
3)GUTH, Felicitas

(57) Abstract :
A coating composition useful for coating tablets, such as compressed tablets, caplets, pills, capsules, confectionary or seeds comprises an opacifying amount of crospovidone having an average particle size of less than 10 µm. Crospovidone having an average particle size of less than 10 µm is used as opacifier and white pigment in a coating of a coated tablet for replacement of titanium dioxide.

No. of Pages : 16 No. of Claims : 14

(12) PATENT APPLICATION PUBLICATION
(21) Application No.202517097212 A
(19) INDIA
(22) Date of filing of Application :08/10/2025
(43) Publication Date : 14/11/2025

(54) Title of the invention : TWO-DOSE DOSAGE SYSTEM FOR A FLUID PRODUCT DISPENSING DEVICE

(51) International classification :A61M 5/315
(31) Priority Document No :FR2301323
(32) Priority Date :13/02/2023
(33) Name of priority country :France
(86) International Application No :PCT/FR2024/050187
Filing Date :12/02/2024
(87) International Publication No :WO 2024/170849
(61) Patent of Addition to Application Number :NA
Filing Date :NA
(62) Divisional to Application Number :NA
Filing Date :NA

(71)**Name of Applicant :**
1)APTAR FRANCE SAS
Address of Applicant :Lieudit Le Prieuré 27110 LE NEUBOURG France
(72)**Name of Inventor :**
1)POULLAIN, Franck

(57) Abstract :
Disclosed is a two-dose dosage system (20) for a fluid product dispensing device, said device comprising a syringe-type reservoir (1) containing fluid product, and a piston (2) that is locked to a piston rod (3) and is slidably mounted in the reservoir (1) to dispense the fluid product, the two-dose dosage system (20) comprising: an attachment portion (21) which attaches to the piston rod (3), dose splitting means (24, 25) for separating the actuation stroke of the piston rod (3) into two half-strokes for dispensing a dose each, and energy accumulation means (26a, 27a; 26b, 27b), for generating a resistance during each actuation of the piston rod (3).

No. of Pages : 12 No. of Claims : 11

(12) PATENT APPLICATION PUBLICATION
(21) Application No.202517097213 A
(19) INDIA
(22) Date of filing of Application :08/10/2025
(43) Publication Date : 14/11/2025

(54) Title of the invention : TERMINAL DEVICE, SHARING ACCESS POINT, SHARED ACCESS POINT, AND COMMUNICATION METHOD THEREFOR

(51) International classification :H04W 36/18
(31) Priority Document No :NA
(32) Priority Date :NA
(33) Name of priority country :NA
(86) International Application No :PCT/JP2023/014918
Filing Date :12/04/2023
(87) International Publication No :WO 2024/214225
(61) Patent of Addition to Application Number :NA
Filing Date :NA
(62) Divisional to Application Number :NA
Filing Date :NA

(71)**Name of Applicant :**
1)NTT, INC.
Address of Applicant :5-1, Otemachi 1-chome, Chiyoda-ku, Tokyo 1008116 Japan
(72)**Name of Inventor :**
1)KISHIDA, Akira
2)NAGATA, Kengo
3)ASAI, Yusuke
4)TAKATORI, Yasushi

(57) Abstract :
This terminal device constitutes a communication system with a sharing access point, a shared access point provided at a position apart from the sharing access point, and another shared access point. The terminal device is configured so that: when a first wireless link with the sharing access point via the shared access point is established, switching from the first wireless link is requested of the sharing access point; and, in response to a notification based on a request from the sharing access point to the shared access point and the other shared access point, switching is carried out from the first wireless link to a second wireless link with the sharing access point via the other shared access point.

No. of Pages : 35 No. of Claims : 9

(12) PATENT APPLICATION PUBLICATION
(21) Application No.202517097216 A
(19) INDIA
(22) Date of filing of Application :08/10/2025
(43) Publication Date : 14/11/2025

(54) Title of the invention : TERMINAL DEVICE, SHARING ACCESS POINT, SHARED ACCESS POINT, AND COMMUNICATION METHOD

(51) International classification	:H04W 76/15, H04W 84/12
(31) Priority Document No	:NA
(32) Priority Date	:NA
(33) Name of priority country	:NA
(86) International Application No	:PCT/JP2023/014920
Filing Date	:12/04/2023
(87) International Publication No	:WO 2024/214227
(61) Patent of Addition to Application Number	:NA
Filing Date	:NA
(62) Divisional to Application Number	:NA
Filing Date	:NA

(71)**Name of Applicant :**
1)NTT, INC.
Address of Applicant :5-1, Otemachi 1-chome, Chiyoda-ku, Tokyo 1008116 Japan
(72)**Name of Inventor :**
1)KISHIDA, Akira
2)NAGATA, Kengo
3)ASAI, Yusuke
4)TAKATORI, Yasushi

(57) Abstract :
This terminal device comprises a sharing access point, a plurality of shared access points, and a terminal device. The terminal device has a plurality of radio signal processing units and a control unit. The plurality of radio signal processing units each transmit radio signals using different channels. The control unit controls connection destinations of the plurality of radio signal processing units. Each radio signal processing unit establishes a wireless link with each shared access point. On the basis of a notification from the sharing access point, the control unit controls the connection destination of each of the radio signal processing units by, for each radio signal processing unit, enabling a maximum of one of the wireless links for each shared access point and disabling the other wireless links.

No. of Pages : 44 No. of Claims : 4

(12) PATENT APPLICATION PUBLICATION
(21) Application No.202518067114 A
(19) INDIA
(22) Date of filing of Application :14/07/2025
(43) Publication Date : 14/11/2025

(54) Title of the invention : DEVICE FOR GENERATING MAGNETIC FIELD AND METHOD FOR CONTROLLING SAME

(51) International classification	:A61N 5/10, A61N 2/00, A61N 2/02
(31) Priority Document No	:10-2020-0050313
(32) Priority Date	:24/04/2020
(33) Name of priority country	:Republic of Korea
(86) International Application No	:PCT/KR2021/005131
Filing Date	:23/04/2021
(87) International Publication No	: NA
(61) Patent of Addition to Application Number	:NA
Filing Date	:NA
(62) Divisional to Application Number	:202217060109
Filed on	:20/10/2022

(71)**Name of Applicant :**
1)RADEXEL INC.
Address of Applicant :301-ho, 10, Chunghon-gil 52beon-gil, Chuncheon-si, Gangwon-do 24437, Korea Republic of Korea
(72)**Name of Inventor :**
1)LEE, Jeong Won

(57) Abstract :
The present invention relates to a radiation treatment apparatus (10) for treating affected tissue of a subject using photon beam radiation. The apparatus (10) comprises a radiation generating unit (100) configured to irradiate the tissue, and a magnetic field generating unit (200) including a capacitor element, at least one coil, and a switch element to connect or disconnect the capacitor to/from the coil. A radiation amount control unit (500) adjusts the phase of the magnetic field. A synchronization control unit (700) synchronizes the radiation pulse with a magnetic field pulse by controlling the coil current via the switch element, thereby supplying pulse power to generate a pulse-type magnetic field. The radiation pulse and magnetic field pulse temporally overlap, and the control unit (500) matches a reference intensity period in the magnetic field pulse with the period in which secondary electrons are generated. Most Illustrative Figure: Figure 1

No. of Pages : 90 No. of Claims : 10

(12) PATENT APPLICATION PUBLICATION
(21) Application No.202517096591 A
(19) INDIA
(22) Date of filing of Application :07/10/2025
(43) Publication Date : 14/11/2025

(54) Title of the invention : VEHICLE CONTROL DEVICE, CONTROL METHOD, AND SADDLED VEHICLE

(51) International classification	:F02D 29/02, F02N 11/08
(31) Priority Document No	:NA
(32) Priority Date	:NA
(33) Name of priority country	:NA
(86) International Application No	:PCT/JP2023/010967
Filing Date	:20/03/2023
(87) International Publication No	:WO 2024/195001
(61) Patent of Addition to Application Number	:NA
Filing Date	:NA
(62) Divisional to Application Number	:NA
Filing Date	:NA

(71)**Name of Applicant :**
1)HONDA MOTOR CO., LTD.
Address of Applicant :2-3, Toranomon 2-chome, Minato-ku, Tokyo 1058404 Japan
(72)**Name of Inventor :**
1)TSUNEKAWA, Kazunori
2)OSAWA, Toshifumi
3)KOYAMA, Hiroaki
4)NAGAHASHI, Yoshiki
5)KATAOKA, Dai
6)NAGATA, Wataru

(57) Abstract :
The present invention provides a vehicle control device comprising a control means that controls an engine mounted in a vehicle and an electric motor capable of rotating a crankshaft of the engine. When an idle stop condition is satisfied during travel of the vehicle, the control means executes automatic stopping of the engine and stopping position control for braking, with driving force of the electric motor, the crankshaft which is rotating with momentum, to stop the crankshaft at a prescribed position. The stopping position control includes pre-brake control for controlling the electric motor such that the rotational speed of the crankshaft decreases in accordance with predetermined target transition information, and main brake control for controlling the electric motor such that the crankshaft stops at the prescribed position, after the pre-brake control.

No. of Pages : 24 No. of Claims : 9

(12) PATENT APPLICATION PUBLICATION
(21) Application No.202517096592 A
(19) INDIA
(22) Date of filing of Application :07/10/2025
(43) Publication Date : 14/11/2025

(54) Title of the invention : NEGATIVE ELECTRODE FOR LITHIUM-FREE SECONDARY BATTERY AND LITHIUM-FREE SECONDARY BATTERY COMPRISING THE SAME

(51) International classification	:H01M 4/66, H01M 10/052, H01M 4/04, H01M 10/058, H01M 4/02
(31) Priority Document No	:10-2023-0059728
(32) Priority Date	:09/05/2023
(33) Name of priority country	:Republic of Korea
(86) International Application No	:PCT/KR2024/006158
Filing Date	:08/05/2024
(87) International Publication No	:WO 2024/232647
(61) Patent of Addition to Application Number	:NA
Filing Date	:NA
(62) Divisional to Application Number	:NA
Filing Date	:NA

(71)**Name of Applicant :**
1)LG ENERGY SOLUTION, LTD.
Address of Applicant :Tower 1, 108, Yeoui-daero, Yeongdeungpo-gu, Seoul 07335 Republic of Korea
2)KOREA ADVANCED INSTITUTE OF SCIENCE AND TECHNOLOGY
(72)**Name of Inventor :**
1)KIM, Sanha
2)WON, Dongyeon
3)YANG, Inyeong

(57) Abstract :
The present invention relates to an anode for a lithium-free secondary battery capable of improving electrochemical characteristics and lifespan characteristics of a lithium-free secondary battery, a manufacturing method therefor and a lithium-free secondary battery. The anode may comprise: a conductive metal layer; and a lithium electrodeposition induction layer formed on the conductive metal layer and including an intermetallic compound in which copper and zinc are bonded.

No. of Pages : 31 No. of Claims : 11

(12) PATENT APPLICATION PUBLICATION

(21) Application No.202421036174 A

(19) INDIA

(22) Date of filing of Application :07/05/2024

(43) Publication Date : 14/11/2025

(54) Title of the invention : METHOD AND SYSTEM FOR NETWORK FAULT MANAGEMENT BY PREDICTING AVERAGE RATE AT FAULTY BASE STATION

(51) International classification	:G06K0009620000, H04W0024040000, H04L0041067700, G06F0011070000, H04L0041147000	(71)**Name of Applicant :** **1)Tata Consultancy Services Limited** Address of Applicant :Nirmal Building, 9th Floor, Nariman Point, Mumbai 400021, Maharashtra, India Mumbai Maharashtra India
(31) Priority Document No	:NA	(72)**Name of Inventor :**
(32) Priority Date	:NA	**1)YADAV, Indu**
(33) Name of priority country	:NA	**2)SUMAN, Santan**
(86) International Application No	:NA	**3)MISHRA, Garima**
Filing Date	:NA	**4)RATH, Hemant Kumar**
(87) International Publication No	: NA	**5)MENON, Muralidharan Sadanand**
(61) Patent of Addition to Application Number	:NA	
Filing Date	:NA	
(62) Divisional to Application Number	:NA	
Filing Date	:NA	

(57) Abstract :

This disclosure relates generally to a method and system for network fault management. Conventionally, faults are analyzed by setting rules based on network experts' experience, such as duration of faults or predefined categories of faults, to determine which faults need to be handled with higher priority. The present disclosure addresses these problems through a method of performing network fault management at a faulty base station using a timeseries forecasting model coupled with a clustering algorithm. The time series forecasting model considers a plurality of network parameters received from a plurality of base stations serving at least one user equipment (UE) and trains the model to predict an average data rate at the faulty BS. Further the model receives the network parameters for a cluster comprising the faulty BS and re-trains itself. Finally, the model prioritizes the faults based on decreased average data rate of the UE at the faulty BS.

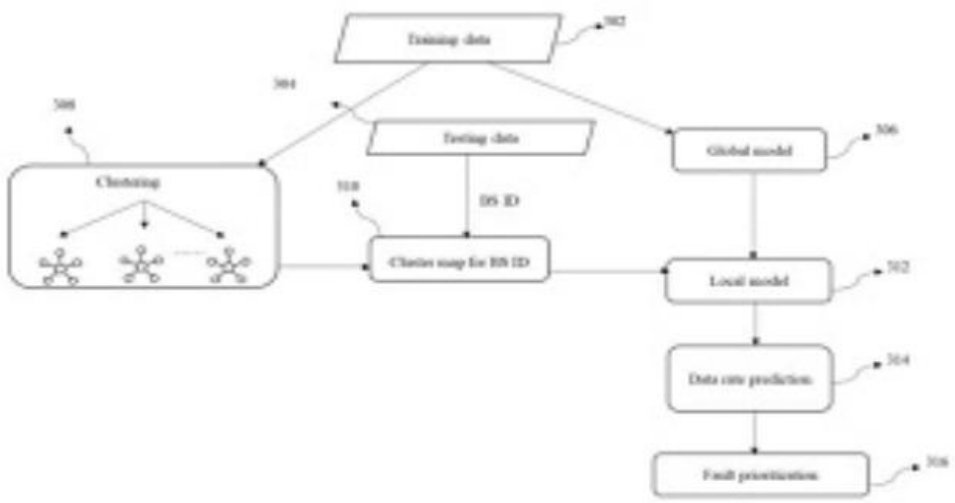

FIG. 3

No. of Pages : 47 No. of Claims : 8

(12) PATENT APPLICATION PUBLICATION
(21) Application No.202421036175 A
(19) INDIA
(22) Date of filing of Application :07/05/2024
(43) Publication Date : 14/11/2025

(54) Title of the invention : A CATALYST COMPOSITION, A PROCESS OF PREPARATION AND DEHYDROGENATION OF ALKANE

(51) International classification	:B01J23/00, B01J37/03, C07C5/333	(71)**Name of Applicant :** **1)RELIANCE INDUSTRIES LIMITED** Address of Applicant :3rd Floor, Maker Chamber-IV, 222, Nariman Point, Mumbai - 400 021, Maharashtra, India Mumbai Maharashtra India
(31) Priority Document No	:NA	
(32) Priority Date	:NA	(72)**Name of Inventor :**
(33) Name of priority country	:NA	**1)Venkata Chandra Shekhar Palla**
(86) International Application No	:NA	**2)Sateesh Daggupati**
Filing Date	:NA	**3)Venkata Narasimha Rao Chelli**
(87) International Publication No	: NA	**4)Sayani Thakur**
(61) Patent of Addition to Application Number	:NA	**5)Kalpesh Giracch**
Filing Date	:NA	**6)Sukumar Mandal**
(62) Divisional to Application Number	:NA	**7)Asit Kumar Das**
Filing Date	:NA	**8)Ajit Viswanath Sapre**

(57) Abstract :
A CATALYST COMPOSITION, A PROCESS OF PREPARATION AND DEHYDROGENATION OF ALKANE The present disclosure relates to a catalyst composition comprising modified support matrix, a promoter and chromium oxide. The catalyst composition is hydrothermally stable, attrition resistant, low in acidic property and has high oxygen scavenging capacity. The present disclosure further relates to a process of preparing the catalyst composition. The disclosure also relates to an enhanced dehydrogenation of alkane to corresponding olefin. FIGURE 2

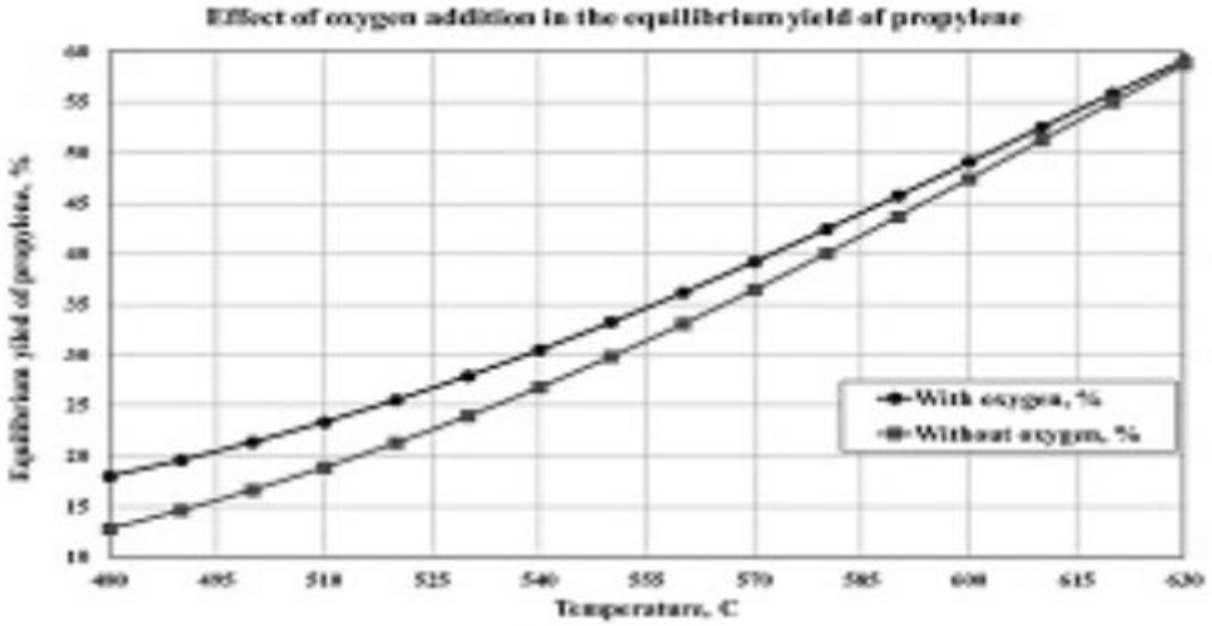

FIGURE 2

No. of Pages : 24 No. of Claims : 21

(12) PATENT APPLICATION PUBLICATION
(21) Application No.202421036177 A
(19) INDIA
(22) Date of filing of Application :07/05/2024
(43) Publication Date : 14/11/2025

(54) Title of the invention : SYSTEM AND METHOD FOR ESTIMATING CROP WATER REQUIREMENT USING MULTI-SENSOR DATA FUSION

(51) International classification	:G06Q0050020000, A01G0025160000, H04W0004380000, G01W0001100000, G06N0020000000	
(31) Priority Document No	:NA	
(32) Priority Date	:NA	
(33) Name of priority country	:NA	
(86) International Application No	:NA	
Filing Date	:NA	
(87) International Publication No	: NA	
(61) Patent of Addition to Application Number	:NA	
Filing Date	:NA	
(62) Divisional to Application Number	:NA	
Filing Date	:NA	

(71)**Name of Applicant :**
1)Tata Consultancy Services Limited
Address of Applicant :Nirmal Building, 9th Floor, Nariman Point, Mumbai 400021, Maharashtra, India Mumbai Maharashtra India
(72)**Name of Inventor :**
1)SAWANT, Suryakant Ashok
2)KUMAR, Jay Prakash
3)MOHITE, Jayantrao
4)PANDIT, Ankur
5)PAPPULA, Srinivasu

(57) Abstract :
This disclosure relates generally to system and method for estimating crop water requirement using multi-sensor data fusion. Increasing global population is imparting pressure on both agriculture for food demand and limited freshwater resources for consumption. Estimating crop water requirement reduces water demand for crop production. The method divides soil and crop into multiple vertical and horizontal profiles to estimate water balance thereby reducing the errors in estimation of crop water requirement. Additionally, the method has capability to interlink the multiple data sets such as satellite based earth observations, weather observations from IoT sensors, Weather forecasts from global circulation models, and crop knowledge base for crop water requirement estimation. The method is based on spatio-temporal modeling for multi-layer crop and soil water balance and helps to generate the additional insights on crop water requirement like moisture at different levels in soil profile, crop canopy growth at different locations.

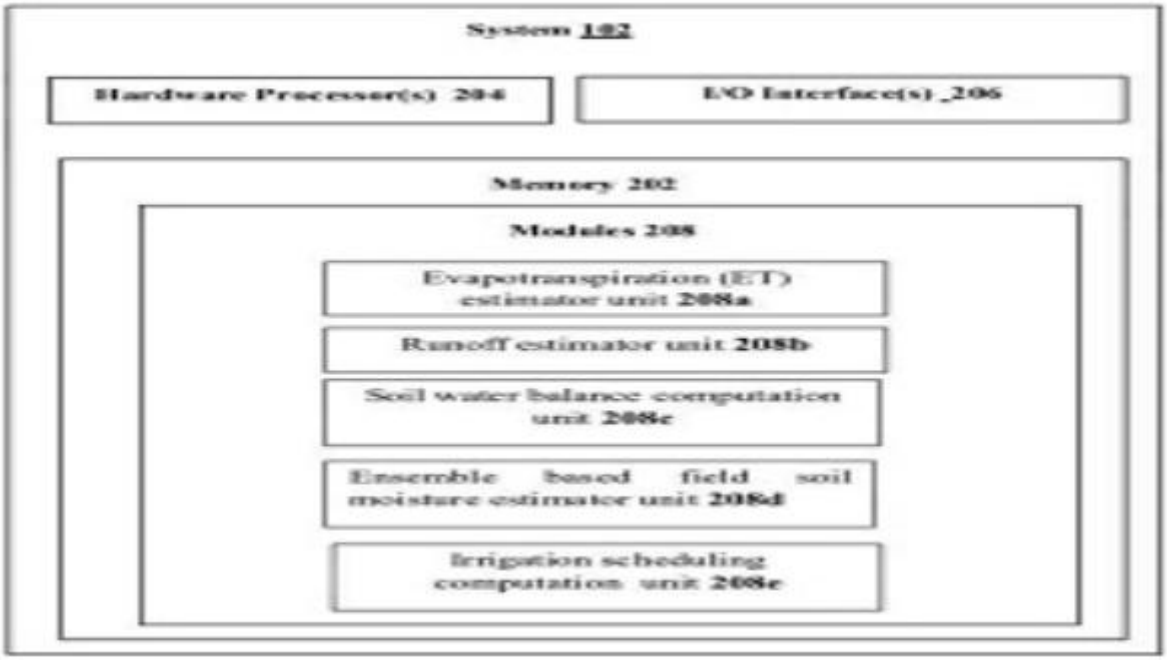

FIG. 2

No. of Pages : 43 No. of Claims : 16

(12) PATENT APPLICATION PUBLICATION
(21) Application No.202421036425 A
(19) INDIA
(22) Date of filing of Application :08/05/2024
(43) Publication Date : 14/11/2025

(54) Title of the invention : METHOD AND SYSTEM FOR PROVIDING AN ACCESS TO OVER-THE-TOP (OTT) CONTENT ON RESTRICTED DEVICE PLATFORM

(51) International classification	:H04L0065600000, H04L0009080000, H04W0088020000, H04L0043085200, G06F0021350000	(71)**Name of Applicant :** **1)TATA PLAY LIMITED** Address of Applicant :3rd Floor, Unit 301 to 305, Windsor, Off C.S.T. Road, Mumbai-400098, India Mumbai Maharashtra India
(31) Priority Document No	:NA	(72)**Name of Inventor :**
(32) Priority Date	:NA	**1)Harit Nagpal**
(33) Name of priority country	:NA	**2)Vishal Arya**
(86) International Application No	:NA	**3)Prathap Chowdry**
Filing Date	:NA	**4)Anand Prakash**
(87) International Publication No	: NA	**5)Ajay Harwani**
(61) Patent of Addition to Application Number	:NA	
Filing Date	:NA	
(62) Divisional to Application Number	:NA	
Filing Date	:NA	

(57) Abstract :
METHOD AND SYSTEM FOR PROVIDING AN ACCESS TO OVER-THE-TOP (OTT) CONTENT ON RESTRICTED DEVICE PLATFORM The disclosure relates to a method of providing an access to Over-The-Top (OTT) content on a restricted device platform in an OTT environment. The method includes receiving a request from a user device (102) to access OTT content of a service provider application (106) of a plurality of service provider applications (106a-n) registered with the OTT aggregator system (104). The request comprises a device identifier (ID) of the user device (102). Further, the method comprises facilitating the service provider application (106) to match the device ID of the user device (102) with pre-stored device IDs, while launching a session in the service provider application (106). Thereafter, the method comprises providing the access to the OTT content associated with the service provider application (106) to the user device (102), by automatically logging to the service provider application (106) through a Single-Sing-On (SSO) process, based on the match. FIGURE 1

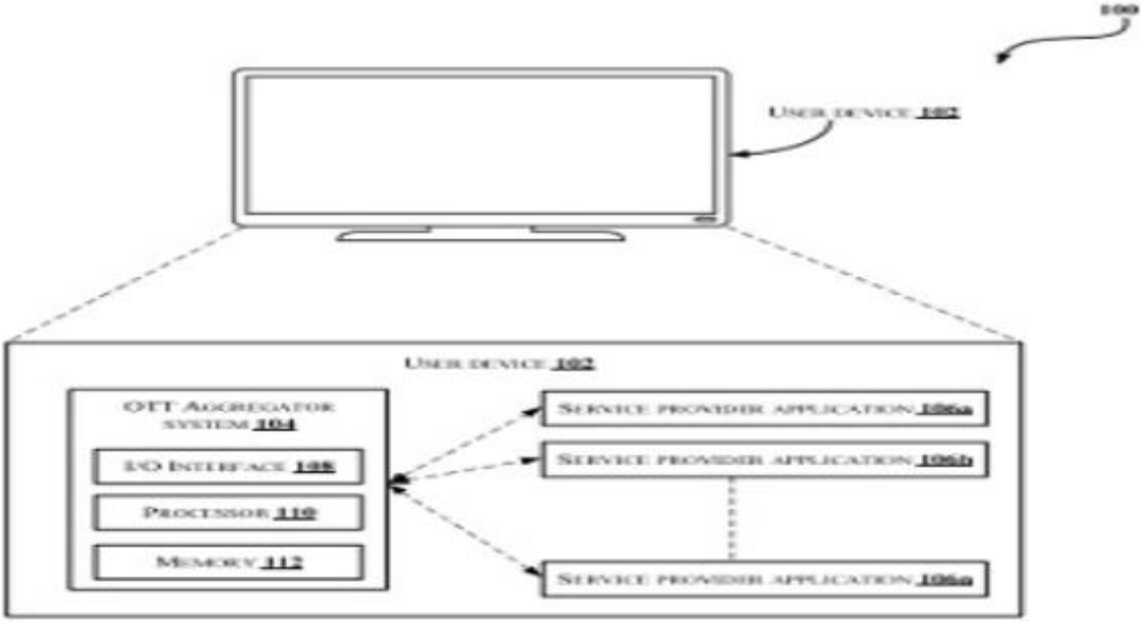

FIGURE 1

No. of Pages : 33 No. of Claims : 6

(12) PATENT APPLICATION PUBLICATION
(21) Application No.202421028489 A
(19) INDIA
(22) Date of filing of Application :07/05/2024
(43) Publication Date : 14/11/2025

(54) Title of the invention : HERBAL WATER TREATMENT PROCESS FOR SWIMMING POOLS, WATER PARKS & WATER BODIES AND A SYSTEM THEREOF

(51) International classification	: A23L1/30, C02F1/44, C02F1/50, C02F1/78, C02F3/32	(71)**Name of Applicant :** **1)AMIMA PROJECTS PVT LTD.** Address of Applicant :Argus Chambers Premises, Plot No G-1, GUT No. 796, MAFCO Rd, Sector 18, Vashi, Navi Mumbai, Maharashtra PIN - 400707, INDIA NAVI MUMBAI Maharashtra India
(31) Priority Document No	:NA	(72)**Name of Inventor :**
(32) Priority Date	:NA	**1)Dr. S. Murthy**
(33) Name of priority country	:NA	**2)Dr. K. P. Sunil**
(86) International Application No	:NA	
Filing Date	:NA	
(87) International Publication No	: NA	
(61) Patent of Addition to Application Number	:NA	
Filing Date	:NA	
(62) Divisional to Application Number	:NA	
Filing Date	:NA	

(57) Abstract :
ABSTRACT HERBAL WATER TREATMENT PROCESS FOR SWIMMING POOLS, WATER PARKS & WATER BODIES AND A SYSTEM THEREOF A herbal-based water treatment process for removing impurities from swimming pools, water parks, and water bodies, comprising the steps of - (a) passing an aqueous stream through a stationary bar screen to remove large debris and particulates; (b) adjusting the pH of the aqueous stream to a range of 6.5 to 8.0; (c) dosing a herbal reagent comprising extracts of Neem (Azadirachta indica), Drumstick (Moringa oleifera), and Basil (Ocimum sanctum) blended with organic solvents at a concentration of 40 ppm (40 ml/kL) for initial treatment; (d) mixing the herbal reagent into the aqueous stream through agitation or aeration; (e) inducing flocculation and sedimentation of suspended solids; (f) performing micro-media filtration to remove residual particulates and pathogens; and (g) circulating the treated aqueous stream through a sand filter to achieve crystal clear water free of pathogens.

No. of Pages : 16 No. of Claims : 10

(12) PATENT APPLICATION PUBLICATION
(21) Application No.202421028490 A
(19) INDIA
(22) Date of filing of Application :07/05/2024
(43) Publication Date : 14/11/2025

(54) Title of the invention : HERBAL WATER TREATMENT PROCESS FOR SEWAGE / DRINKING WATER TREATMENT PLANTS AND SYSTEM THEREOF

(51) International classification	: A23L1/30, C02F1/44, C02F1/50, C02F1/78, C02F3/32	(71)**Name of Applicant :** **1)AMIMA PROJECTS PVT LTD.** Address of Applicant :Argus Chambers Premises, Plot No G-1, GUT No. 796, MAFCO Rd, Sector 18, Vashi, Navi Mumbai, Maharashtra PIN - 400707, INDIA NAVI MUMBAI Maharashtra India
(31) Priority Document No	:NA	(72)**Name of Inventor :**
(32) Priority Date	:NA	**1)Dr. S. Murthy**
(33) Name of priority country	:NA	**2)Dr. K. P. Sunil**
(86) International Application No	:NA	
Filing Date	:NA	
(87) International Publication No	: NA	
(61) Patent of Addition to Application Number	:NA	
Filing Date	:NA	
(62) Divisional to Application Number	:NA	
Filing Date	:NA	

(57) Abstract :
ABSTRACT HERBAL WATER TREATMENT PROCESS FOR SEWAGE / DRINKING WATER TREATMENT PLANTS AND SYSTEM THEREOF A herbal-based water treatment process for removing impurities from raw sewage and producing potable-grade water, comprising the steps of (a) passing an aqueous stream through a bar screen to remove large floating materials; (b) skimming oils and grease using a gravity-based oil/grease trap; (c) neutralizing the pH of the aqueous stream to approximately 8.5 using a herbalbased pH reagent; (d) dosing a herbal reagent comprising extracts of Neem (Azadirachta indica), Tulsi (Ocimum sanctum), Moringa (Moringa oleifera), and Cleaning Nut (Strychnos potatorum) bound with a water-soluble organic solvent at a concentration of 50 ppm (50 ml/kL); (e) mixing the herbal reagent into the aqueous stream using an agitator; (f) inducing flocculation and sedimentation of suspended solids in a hopper bottom Tube Settler over 2–3 hours; and (g) filtering the treated aqueous stream through a Pressurized Sand Filter (PSF) and Activated Carbon Filter (ACF) to achieve potable-grade water. Fig 1

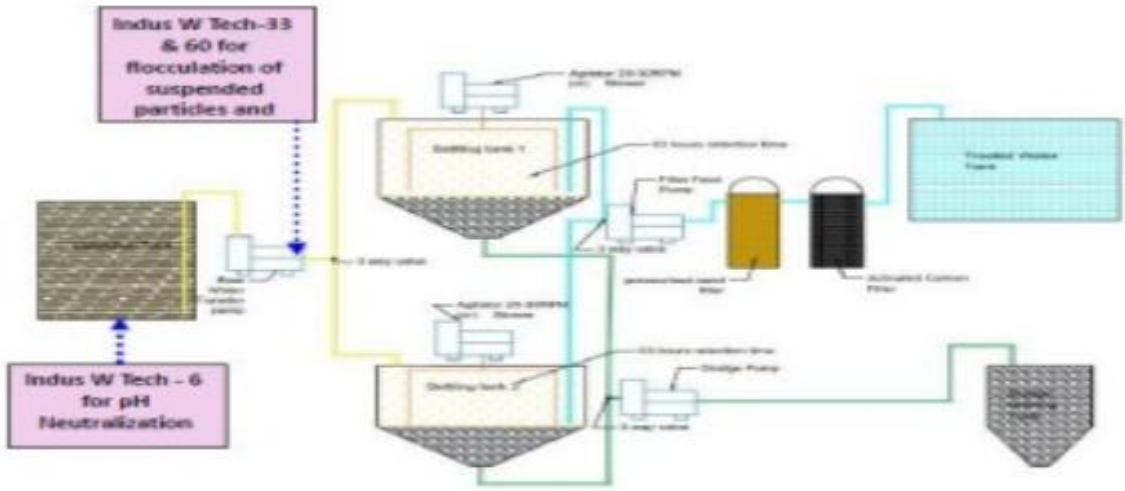

Fig 1

No. of Pages : 16 No. of Claims : 10

(12) PATENT APPLICATION PUBLICATION

(21) Application No.202421037044 A

(19) INDIA

(22) Date of filing of Application :10/05/2024

(43) Publication Date : 14/11/2025

(54) Title of the invention : METHOD AND SYSTEM FOR BIOMETRIC SINGLE SIGN-ON AUTHENTICATION VIA HOMOMORPHIC HASH BASED MESSAGE AUTHENTICATION CODE

(51) International classification	:H04L0009320000, H04L0009000000, H04W0012060000, G06F0021410000, G07C0009370000	(71)**Name of Applicant :** **1)Tata Consultancy Services Limited** Address of Applicant :Nirmal Building, 9th floor, Nariman point, Mumbai 400021, Maharashtra, India Mumbai Maharashtra India
(31) Priority Document No	:NA	(72)**Name of Inventor :** **1)NARUMANCHI, Harika** **2)MADDALI, Lakshmi Padmaja**
(32) Priority Date	:NA	
(33) Name of priority country	:NA	
(86) International Application No	:NA	
Filing Date	:NA	
(87) International Publication No	: NA	
(61) Patent of Addition to Application Number	:NA	
Filing Date	:NA	
(62) Divisional to Application Number	:NA	
Filing Date	:NA	

(57) Abstract :

ABSTRACT METHOD AND SYSTEM FOR BIOMETRIC SINGLE SIGN- ON AUTHENTICATION VIA HOMOMORPHIC HASH BASED 5 MESSAGE AUTHENTICATION CODE The present disclosure provides biometric single sign-on authentication via homomorphic hash based message authentication code (HMAC). Conventional methods fails to provide authentication without revealing biometric data. In the present disclosure, when the user initiates a service request, a service provider 10 redirects to an identify provider for authentication. Further, user captures and encrypts his/her biometrics using homomorphic HMAC, creating ciphertext. User submits his/her encrypted biometrics to the identity provider for authentication. The identity provider uses template matching algorithms to compare the user submitted encrypted biometrics (fingerprint, iris) with stored templates. The identity provider 15 then transmits authentication result and the corresponding proof of authentication. Further, the service provider re-computes the authentication tag based on the received decrypted authentication result and the secret nonce. Finally, the service provider provides the requested service to the client machine, only if the re-computed authentication tag matches with the associated decrypted proof. 20 [To be published with FIG. 3B]

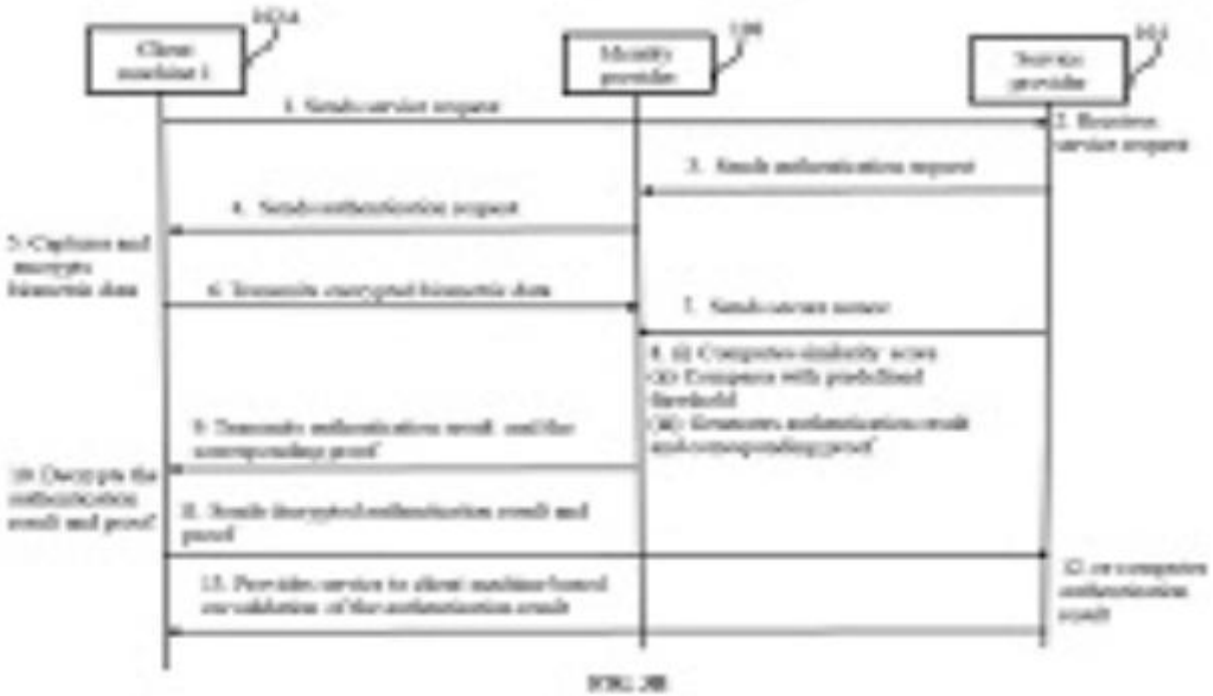

No. of Pages : 33 No. of Claims : 5

(12) PATENT APPLICATION PUBLICATION
(21) Application No.202421036061 A
(19) INDIA
(22) Date of filing of Application :07/05/2024
(43) Publication Date : 14/11/2025

(54) Title of the invention : COOKING VESSEL OF AN HOUSEHOLD PRESSURE COOKER.

(51) International classification :A47J27/08
(31) Priority Document No :NA
(32) Priority Date :NA
(33) Name of priority country :NA
(86) International Application No :NA
Filing Date :NA
(87) International Publication No : NA
(61) Patent of Addition to Application Number :NA
Filing Date :NA
(62) Divisional to Application Number :NA
Filing Date :NA

(71)**Name of Applicant :**
1)SHINGADE SUNIL G.
Address of Applicant :AT: TALEGAON(DE), TALUKA-SHIRUR ANANTPAL DISTRICT: LATUR, STATE MAHARASHTRA, COUNTRY INDIA, PIN CODE:413544 Maharashtra India
2)MANE SATISH M.
(72)**Name of Inventor :**
1)SHINGADE SUNIL G.
2)MANE SATISH M.

(57) Abstract :
6. ABSTRACT OF THE INVENTION: The invented cooking vessel is applicable for household pressure cooker and it utilizes base surface area of each of the vessel for transferring heat to the vessel contents at the faster rate. Therefore, entire cooking operation gets accelerate. 4

No. of Pages : 8 No. of Claims : 2

(12) PATENT APPLICATION PUBLICATION
(21) Application No.202421036064 A
(19) INDIA
(22) Date of filing of Application :07/05/2024
(43) Publication Date : 14/11/2025

(54) Title of the invention : A ROLLING APPARATUS FOR HERBAL SMOKING STICKAND A METHOD OF PREPARATION THEREOF

(51) International classification	:A24B0015160000, A23B0004052000, A24F0001300000, A22C0015000000, A24D0001020000
(31) Priority Document No	:NA
(32) Priority Date	:NA
(33) Name of priority country	:NA
(86) International Application No	:NA
Filing Date	:NA
(87) International Publication No	: NA
(61) Patent of Addition to Application Number	:NA
Filing Date	:NA
(62) Divisional to Application Number	:NA
Filing Date	:NA

(71)**Name of Applicant :**
1)Anantved REsearch Labs Private Limited
Address of Applicant :Sr. No. 15/3, Ghule Industrial Estate, Nanded Gaon, Sinhagad Road, Pune- 411 041, Maharashtra, India. Pune Maharashtra India
(72)**Name of Inventor :**
1)Dr. Rajas Nitsure

(57) Abstract :
A Rolling Apparatus for Herbal Smoking Stick and A Method of Preparation Thereof A rolling apparatus (100) for herbal smoking stick (300) and the method of preparation thereof, wherein rolling apparatus (100) comprising of a Plate A (102), Plate B (104), Holes for CSK (106), M5 CSK (countersunk) screw (108), Dowel Pins (110), Holes for dowel pins (112), Guide Pin (114), a Base Plate C (116), Holes for guide pin (118), cylindrical cavity (120) and SS Pins (122); are assembled to form a central cavity (120) that allows rolling of the homogenised herbal blends to form an herbal smoking stick (300) with a through hole using a stepwise process; and further provides a hollow conical holder (200) to hold the smouldering smoking stick (300) and wherein the apparatus (100) is easy to assemble, convenient to use and portable; the smoking stick (300) is non-toxic, nicotine-free, non-addictive, herbal, medicinal, allowing continuous, controlled and even combustion; held using a holder (200) that allows the smoke to travel gradually thereby providing a finer, pleasant and comfortable smoking experience to the smoker.

No. of Pages : 29 No. of Claims : 10

(12) PATENT APPLICATION PUBLICATION
(21) Application No.202421037423 A
(19) INDIA
(22) Date of filing of Application :13/05/2024
(43) Publication Date : 14/11/2025

(54) Title of the invention : A SYSTEM AND A METHOD OF THERMOCHEMICAL DECOMPOSITION OF UN-SEGREGATED MUNICIPAL SOLID WASTE

(51) International classification	:B09B0003000000, F23G0005027000, C10G0002000000, F02M0021020000, C10J0003000000	(71)**Name of Applicant :** **1)Madhuri Ajay Padole** Address of Applicant :57, Dhanwantari Nagar, B/h Wanjari Samaj Bhavan, Nagpur24, Maharashtra, India Nagpur Maharashtra India **2)Ananta Shripad Bhate**
(31) Priority Document No	:NA	(72)**Name of Inventor :**
(32) Priority Date	:NA	**1)Ajay Ramdas Padole**
(33) Name of priority country	:NA	
(86) International Application No	:NA	
Filing Date	:NA	
(87) International Publication No	: NA	
(61) Patent of Addition to Application Number	:NA	
Filing Date	:NA	
(62) Divisional to Application Number	:NA	
Filing Date	:NA	

(57) Abstract :
A SYSTEM AND A METHOD OF THERMOCHEMICAL DECOMPOSITION OF UN-SEGREGATED MUNICIPAL SOLID WASTE ABSTRACT Disclosed is a system (100) and a method (200) of thermochemical decomposition of un-segregated municipal solid waste. The system (100) comprises a shredder to remove larger-sized components from the waste, a rotary drum dryer to remove excess moisture from the shredded waste, a hopper and feeder mechanism (101) with a screening arrangement and supplies feedstock continuously to a reactor (102), the reactor (102) to provide a space for pyrolysis of the waste entered therewithin, an arrangement for heating (103) to increase the temperature of the reactor (102), a cyclone separator (104) with a plurality of stages to separate dust particles from the volatile gases to generate syngas, a condenser (105) with a plurality of stages to cool and condense vapors to generate pyrolysis oil, and a control system to facilitate remote monitoring and automation of the system (100). The method (200) significantly reduces oxygenates, improving the energy content of syngas. [To be published with Figure 1]

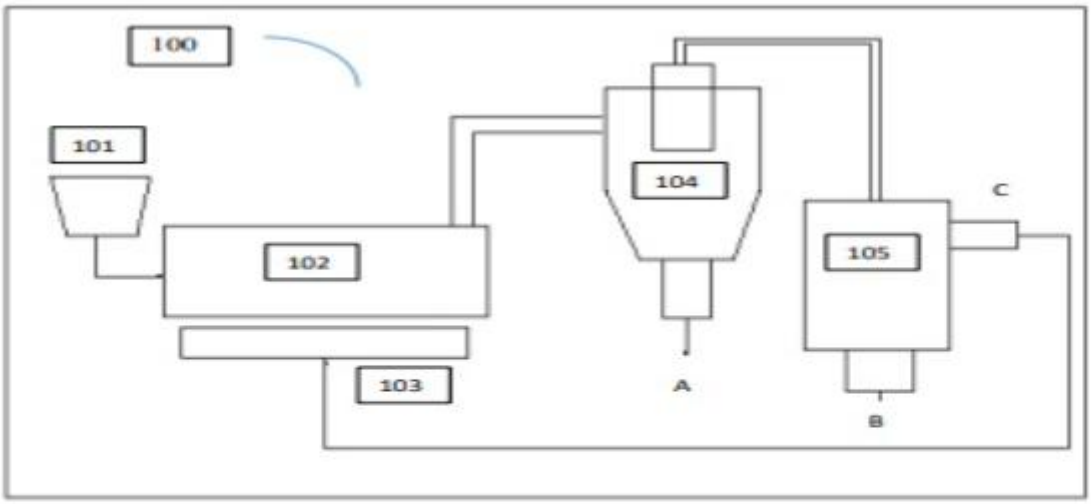

Figure 1

No. of Pages : 23 No. of Claims : 15

(12) PATENT APPLICATION PUBLICATION
(21) Application No.202421037499 A
(19) INDIA
(22) Date of filing of Application :13/05/2024
(43) Publication Date : 14/11/2025

(54) Title of the invention : AN ORAL SELF-MICRO-EMULSIFYING PHARMACEUTICAL COMPOSITION OF A HYDROPHILIC DRUG

(51) International classification	: A61K9/107, A61K31/4184, A61K31/7068, A61K9/48, A61K47/10, A61K9/50, A61K9/66, A61K38/00
(31) Priority Document No	:NA
(32) Priority Date	:NA
(33) Name of priority country	:NA
(86) International Application No	:NA
Filing Date	:NA
(87) International Publication No	: NA
(61) Patent of Addition to Application Number	:NA
Filing Date	:NA
(62) Divisional to Application Number	:NA
Filing Date	:NA

(71)**Name of Applicant :**
1)NANDA GARGI
Address of Applicant :55, Narayan Gardens, Vuda Road, Gotri, Vadodara-390021, Gujarat, India Vadodara Gujarat India
2)BHARADIA PRAFUL DHANJI
(72)**Name of Inventor :**
1)NANDA GARGI
2)BHARADIA PRAFUL DHANJI
3)CHHABRIA MAHESH T.
4)NANDA NAGESH

(57) Abstract :
ABSTRACT AN ORAL SELF-MICRO-EMULSIFYING PHARMACEUTICAL COMPOSITION OF A HYDROPHILIC DRUG The present invention is related to an oral self-micro-emulsifying pharmaceutical composition of a hydrophilic drug. The present invention is particularly related to an oral self-micro-emulsifying pharmaceutical composition of a hydrophilic drug comprising at least one hydrophilic drug or a pharmaceutically acceptable salt as an active agent, an oil, a surfactant system comprising surfactant and co-surfactant, and hydrophilic carrier material and process for preparing the same. The invention intended to enhance bioavailability with increased permeability, without affecting its solubility, and useful in treating type 2 diabetes.

No. of Pages : 25 No. of Claims : 10

(12) PATENT APPLICATION PUBLICATION
(21) Application No.202421036678 A
(19) INDIA
(22) Date of filing of Application :09/05/2024
(43) Publication Date : 14/11/2025

(54) Title of the invention : A NON-INVASIVE BIOSENSOR-BASED SYSTEM FOR EARLY DETECTION OF ORAL CANCER HYPOXIA

(51) International classification	:A61B0005000000, G16H0040670000, A61B0005145500, A61B0005145000, A61B0005080000	(71)**Name of Applicant :** **1)KALELE, Ketki** Address of Applicant :M.D.S. PhD Scholar, DMIMS, University, Wardha, Maharashtra, India Maharashtra India **2)GONDEKAR, Rajshree Keshaorao**
(31) Priority Document No	:NA	(72)**Name of Inventor :**
(32) Priority Date	:NA	**1)THAKARE, Ajay**
(33) Name of priority country	:NA	**2)HANDE, Alka**
(86) International Application No	:NA	**3)NYAHATKAR, Sidhanti Somprakash**
Filing Date	:NA	
(87) International Publication No	: NA	
(61) Patent of Addition to Application Number	:NA	
Filing Date	:NA	
(62) Divisional to Application Number	:NA	
Filing Date	:NA	

(57) Abstract :
The present invention is related to a non-invasive biosensor-based system for early detection of oral cancer hypoxia. it offers real-time, accurate measurements of hypoxia levels, crucial indicators of tumor aggressiveness and treatment responsiveness. The device eliminates the need for invasive procedures, reducing patient discomfort and risks. Integration with ThingSpeak enables seamless data transmission and visualization, enhancing accessibility and facilitating remote patient monitoring. experimental validation confirms the system's effectiveness in monitoring oxygen saturation levels accurately. an innovative aspect involves the integration of machine learning, enhancing diagnostic accuracy by differentiating between oral cancer stages based on hypoxia patterns. this approach holds promise not only for oral cancer but also for diverse healthcare applications, this invention offers a safer, more efficient, and reliable diagnostic tool for early-stage detection and personalized treatment strategies in oral cancer management.

No. of Pages : 15 No. of Claims : 3

(12) PATENT APPLICATION PUBLICATION
(21) Application No.202421036789 A
(19) INDIA
(22) Date of filing of Application :09/05/2024
(43) Publication Date : 14/11/2025

(54) Title of the invention : A MOUNTING ARRANGEMENT FOR A BUSBAR ASSEMBLY OF A BATTERY PACK

(51) International classification	:H01M50/50, H01M50/505, H01M50/502, H01M50/514
(31) Priority Document No	:NA
(32) Priority Date	:NA
(33) Name of priority country	:NA
(86) International Application No	:NA
Filing Date	:NA
(87) International Publication No	: NA
(61) Patent of Addition to Application Number	:NA
Filing Date	:NA
(62) Divisional to Application Number	:NA
Filing Date	:NA

(71)**Name of Applicant :**
1)MAHINDRA ELECTRIC AUTOMOBILE LIMITED
Address of Applicant :Mahindra Tower, Pandurang Budhkar Marg, Nr. Doordarshan Kendra, Worli, Mumbai, Mumbai City - 400018, Maharashtra, India Mumbai City Maharashtra India
(72)**Name of Inventor :**
1)ABUBAKKER SITHICK BASHA
2)MADHU KISHORE CHALUMURU
3)SASIKUMAR KANAGARAJU
4)DHANANJAYA RAO BOITA
5)SHIJINO SHAJI JOHN
6)DEEPAK KUMAR VERMA

(57) Abstract :
ABSTRACT A MOUNTING ARRANGEMENT FOR A BUSBAR ASSEMBLY OF A BATTERY PACK The present disclosure relates to battery packs and busbar assemblies. The present disclosure envisages a mounting arrangement (100) for a busbar assembly of a battery pack. The arrangement (100) comprises a busbar (105) having at least one first recess (107) configured thereon, and at least one busbar terminal (110) configured to receive the busbar (105) thereon. The busbar terminal (110) has at least one second recess (112) configured thereon complementary to the first recess (107). A cover (115) is disposed on the busbar (105). The arrangement (100) further comprises at least one locking means configured on the cover (115), complementary to the first recess (107). The locking means is configured to be received in the first recess (107) and the second recess (112) to enable secure attachment of the busbar (105) with the busbar terminal (110).

No. of Pages : 21 No. of Claims : 13

(12) PATENT APPLICATION PUBLICATION
(21) Application No.202421036807 A
(19) INDIA
(22) Date of filing of Application :09/05/2024
(43) Publication Date : 14/11/2025

(54) Title of the invention : METHOD AND SYSTEM FOR CONTROLLING ACTIVE SHORT CIRCUIT IN ELETRIC MOTOR DRIVE OF A VEHICLE

(51) International classification	:H02M1/08, B60L3/00, H03K17/296, H02H7/08, H02H7/122	(71)**Name of Applicant :** **1)TATA PASSENGER ELECTRIC MOBILITY LIMITED** Address of Applicant :Floor 3, 4, Plot-18, Nanavati Mahalaya, Mudhana Shetty Marg, BSE, Fort, Mumbai, Mumbai City, Maharashtra, 400001 INDIA Mumbai Maharashtra India
(31) Priority Document No	:NA	(72)**Name of Inventor :**
(32) Priority Date	:NA	**1)Senthilnathan Thangavelu**
(33) Name of priority country	:NA	**2)Avdhesh Kumar Sharma**
(86) International Application No	:NA	
Filing Date	:NA	
(87) International Publication No	: NA	
(61) Patent of Addition to Application Number	:NA	
Filing Date	:NA	
(62) Divisional to Application Number	:NA	
Filing Date	:NA	

(57) Abstract :
ABSTRACT METHOD AND SYSTEM FOR CONTROLLING ACTIVE SHORT CIRCUIT IN ELETRIC MOTOR DRIVE OF A VEHICLE A method (200) and system (100) of controlling active short circuit (ASC) in electric motor drive (108) of a vehicle is disclosed. The system (100) includes a comparator (112) configured to compare a direct current (DC) bus voltage across the electric motor drive (108) with respect to a pre-defined threshold voltage. An ASC control circuit (102) is configured to transmit an ASC activation signal to a microcontroller unit (MCU) (110) based on the comparison by the comparator (112). The ASC control circuit (102) is further configured to generate a pulse signal based on a pre-defined non-linear voltage function for a controlled active short circuit of the electric motor drive (108) upon transmitting the ASC activation signal. [To be published with FIG. 1]

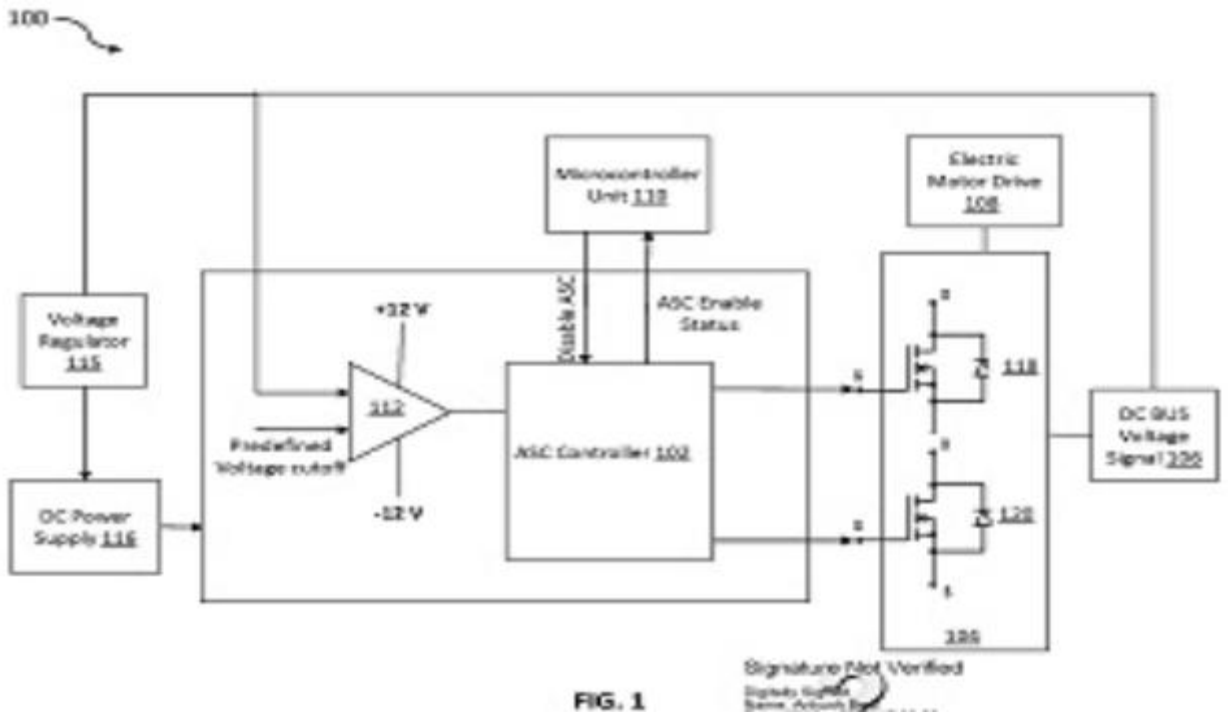

FIG. 1

No. of Pages : 19 No. of Claims : 16

(12) PATENT APPLICATION PUBLICATION

(21) Application No.202421036840 A

(19) INDIA

(22) Date of filing of Application :09/05/2024

(43) Publication Date : 14/11/2025

(54) Title of the invention : SYNERGISTIC HERBAL EXTRACT COMPOSITION FOR CARTILAGE REGENERATION AND TREATMENT OF OSTEOARTHRITIS

(51) International classification	:A61P0019020000, A61K0036324000, A61P0029000000, A61K0009000000, A23L0033105000
(31) Priority Document No	:NA
(32) Priority Date	:NA
(33) Name of priority country	:NA
(86) International Application No	:NA
Filing Date	:NA
(87) International Publication No	: NA
(61) Patent of Addition to Application Number	:NA
Filing Date	:NA
(62) Divisional to Application Number	:NA
Filing Date	:NA

(71)**Name of Applicant :**

1)Phytoveda Pvt. Ltd.

Address of Applicant :6/10 Jogani Industrial Estate, V.N. Purav Marg, Chunabhatti, Mumbai Mumbai Maharashtra India

(72)**Name of Inventor :**

1)Dilip Mehta

2)Anselm de Souza

3)Anirudh Dilip Mehta

4)Ashit Harshad Vora

(57) Abstract :

ABSTRACT The present invention deals with a composition comprising 55% w/w enriched Boswellia serrata extract containing 40% w/w total boswellic acids and 45% w/w enriched Apium graveolens L. seed extract containing 15% w/w celery bioactive (seselin and bergeptan) as quantified by HPLC, optionally along with pharmaceutically or nutraceutically acceptable excipients. The composition exhibits a synergistic effect while reducing cartilage degenerative biomarkers and increasing cartilage regenerative biomarkers when used for the treatment of osteoarthritis. The administration of the said composition also results in the reduction of pain, inflammation, and stiffness and an increase in the gap between knee joints of patients suffering from knee osteoarthritis. The methods of enrichment of extracts, preparation of said composition and treatment of subjects suffering from cartilage degeneration and osteoarthritis are described.

No. of Pages : 20 No. of Claims : 11

(12) PATENT APPLICATION PUBLICATION
(19) INDIA
(22) Date of filing of Application :13/05/2024
(21) Application No.202421037547 A
(43) Publication Date : 14/11/2025

(54) Title of the invention : HIGH RESOLUTION SIMULATION PREDICTION FOR COMPUTATIONAL FLUID DYNAMICS

(51) International classification	:G06F0111100000, G06F0030200000, G16H0050500000, G06F0030230000, G16B0015000000
(31) Priority Document No	:NA
(32) Priority Date	:NA
(33) Name of priority country	:NA
(86) International Application No	:NA
Filing Date	:NA
(87) International Publication No	: NA
(61) Patent of Addition to Application Number	:NA
Filing Date	:NA
(62) Divisional to Application Number	:NA
Filing Date	:NA

(71)**Name of Applicant :**
1)Tata Consultancy Services Limited
Address of Applicant :Nirmal Building, 9th floor, Nariman point, Mumbai 400021, Maharashtra, India Mumbai Maharashtra India
(72)**Name of Inventor :**
1)SARKAR, Rajat Kumar
2)JADHAV, Vishal Sudam
3)SAKHINANA, Sagar Srinivas
4)RUNKANA, Venkataramana
5)ARIPIRALA, Krishna Sai Sudhir

(57) Abstract :
ABSTRACT HIGH RESOLUTION SIMULATION PREDICTION FOR COMPUTATIONAL FLUID DYNAMICS 5 This disclosure relates generally to high resolution simulation prediction for Computational Fluid Dynamics (CFD). CFD plays a crucial role in comprehending intricate physical phenomena spanning across scientific and engineering domains, hence it is essential to conduct simulations at high mesh resolutions for the governing equation of fluid flow. The current state-of-the-art super-resolution 10 techniques involve reconstructing high-resolution data from down sampled low- resolution is limited to single scenario and does not accurately reflect real-world scenarios. The disclosed techniques enable prediction of fine-resolution data from low-resolution inputs from a variety of real-world CFD scenarios. Further the disclosed technique also identifies the most relevant network architecture for any 15 CFD scenario and enabling accurate prediction of high-resolution data from low- resolution inputs by training the network architecture. Furthermore, the disclosure ensures also the robustness of the disclosed system through uncertainty analysis, encompassing both aleatoric and epistemic uncertainty analyses. 20 [To be published with FIG. 2]

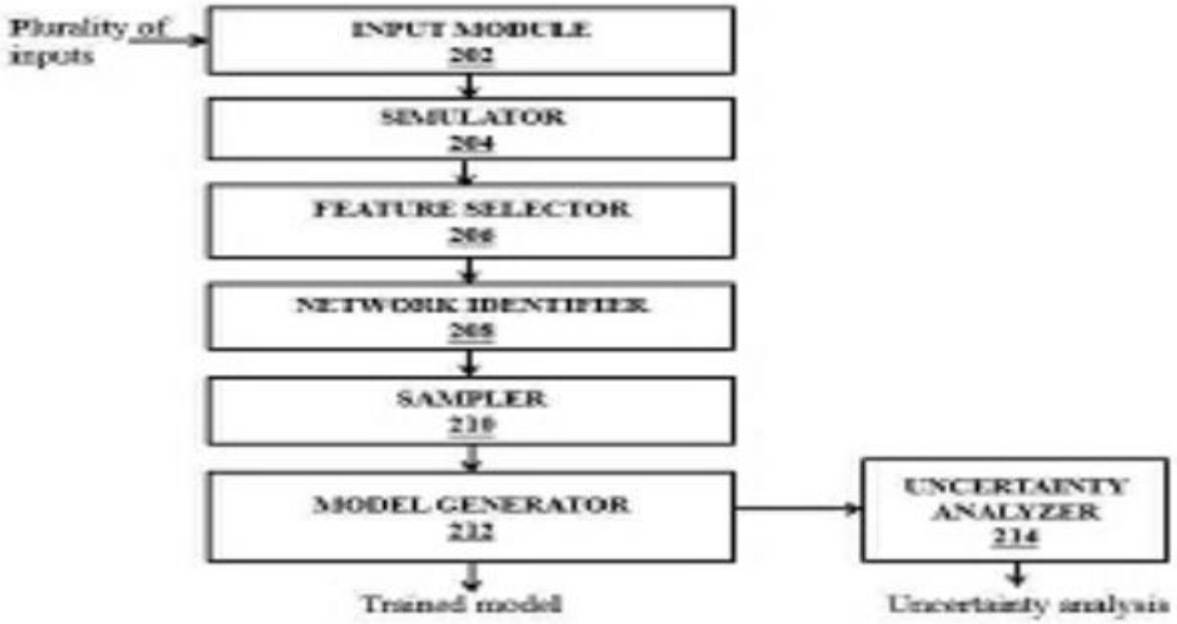

FIG. 2

No. of Pages : 33 No. of Claims : 12

(12) PATENT APPLICATION PUBLICATION
(19) INDIA
(22) Date of filing of Application :13/05/2024
(21) Application No.202421037584 A
(43) Publication Date : 14/11/2025

(54) Title of the invention : A SYSTEM FOR OPENING A HOOD OF A VEHICLE

(51) International classification	:B60J7/185, B60R21/38, E05B65/19, E05B83/24
(31) Priority Document No	:NA
(32) Priority Date	:NA
(33) Name of priority country	:NA
(86) International Application No	:NA
Filing Date	:NA
(87) International Publication No	: NA
(61) Patent of Addition to Application Number	:NA
Filing Date	:NA
(62) Divisional to Application Number	:NA
Filing Date	:NA

(71)**Name of Applicant :**
1)Mahindra Electric Automobile Limited
Address of Applicant :Mahindra Tower, Pandurang Budhkar Marg, Nr. Doordarshan Kendra, Worli, Mumbai, Mumbai City, Maharashtra, India, 400018 Worli Maharashtra India
(72)**Name of Inventor :**
1)SINGH VISHAL
2)DINESH KUMAR
3)UNADKAT SIDDHARTH BHUPENDRA
4)IFTIKHAR ALAM

(57) Abstract :
A SYSTEM FOR OPENING A HOOD OF A VEHICLE The disclosure herein generally relates to a system for locking and un-locking a hood of a vehicle, and more particularly, to a system for opening a hood of a vehicle which is locked through two latches. The system (100) includes an actuator (102) provided inside the vehicle, which is adapted to be actuated to open the hood (20) of the vehicle (10); two connecting members (104, 106) connected to corresponding latches (40, 50) of the vehicle; and a coupling mechanism (200) configured to couple the actuator with the connecting members and adapted to simultaneously displace the two connecting members to unlock the corresponding latches when the actuator is actuated. The system has lesser components, prevents deformation of the hood, ease in assembly and maintenance, and allows user to open the hood with ease. Fig. 1

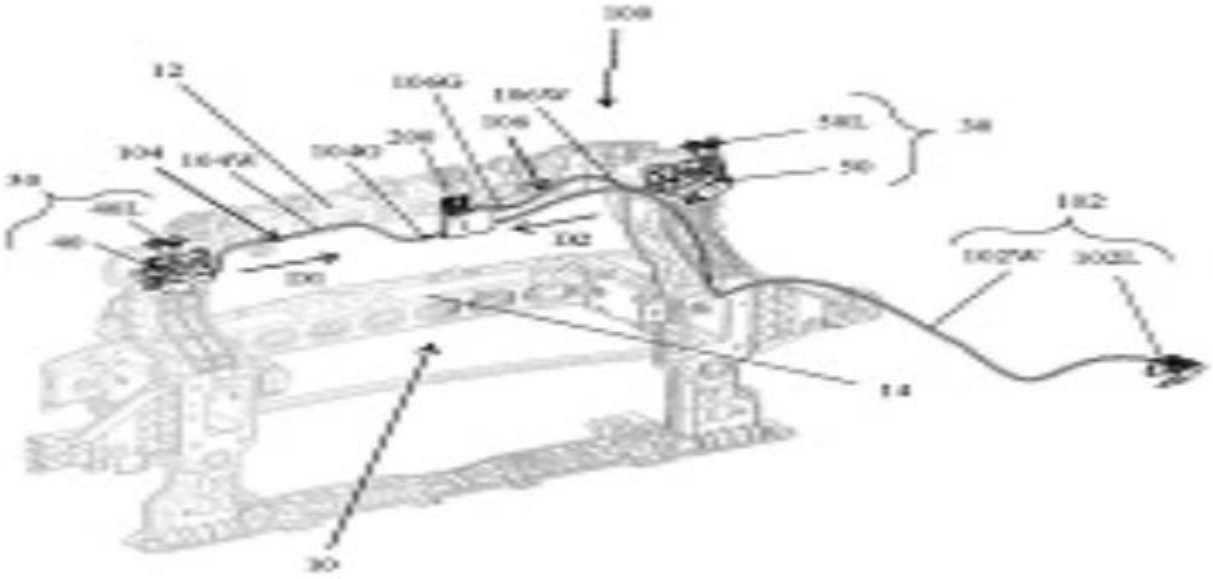

Fig. 1

No. of Pages : 23 No. of Claims : 15

(12) PATENT APPLICATION PUBLICATION
(21) Application No.202421037585 A
(19) INDIA
(22) Date of filing of Application :13/05/2024
(43) Publication Date : 14/11/2025

(54) Title of the invention : SELF OXIDATIVE SINGLE COMPOSITION HAIR COLOUR

(51) International classification	:A61Q5/10, A61K8/34, A61K8/368, A61K8/41, A61K8/362, A61K8/49
(31) Priority Document No	:NA
(32) Priority Date	:NA
(33) Name of priority country	:NA
(86) International Application No	:NA
Filing Date	:NA
(87) International Publication No	: NA
(61) Patent of Addition to Application Number	:NA
Filing Date	:NA
(62) Divisional to Application Number	:NA
Filing Date	:NA

(71)**Name of Applicant :**
1)Godrej Consumer Products Ltd.
Address of Applicant :4th floor, Godrej One, Pirojshanagar, Eastern Express Highway, Vikhroli (East), Mumbai – 400079, Maharashtra, India Mumbai Maharashtra India
(72)**Name of Inventor :**
1)KUMAR, Krishnaraj
2)NAYAK, Meghana
3)RAGHAVACHARI, Rajan
4)RAWAT, Rupinder Kaur
5)OVHAL, Vinod
6)YADLAPALLI, Venkateswara
7)PETER KURUTHIKULAM, Abraham

(57) Abstract :
Disclosed herein is a single composition self oxidative hair colour product containing optimal concentration of self-oxidative molecule preferably Gallic acid which leads to the desired shade (intensity and coverage) within an intended duration of treatment. Gallic acid auto oxidises in the presence of air and alkaline pH further enabling oxidation of oxidative dyes (precursors and couplers) present in the colorant leading to shade delivery on the hair. The composition of invention is preferably an antioxidant-free formulation.

No. of Pages : 37 No. of Claims : 39

(12) PATENT APPLICATION PUBLICATION
(21) Application No.202421037648 A
(19) INDIA
(22) Date of filing of Application :13/05/2024
(43) Publication Date : 14/11/2025

(54) Title of the invention : SYSTEM AND METHOD FOR VISION-BASED CONTROL OF A RECONFIGURABLE SOFT ROBOTIC GRIPPER

(51) International classification	:B25J9/08, B25J13/08, B25J15/12, B25J19/00, B33Y10/00	(71)**Name of Applicant :** **1)Tata Consultancy Services Limited** Address of Applicant :Nirmal Building, 9th floor, Nariman Point, Mumbai 400021, Maharashtra, India Mumbai Maharashtra India
(31) Priority Document No	:NA	(72)**Name of Inventor :** **1)GEORGE, Nijil**
(32) Priority Date	:NA	**2)LIMA, Rolif**
(33) Name of priority country	:NA	**3)VATSAL, Vighnesh**
(86) International Application No	:NA	
Filing Date	:NA	
(87) International Publication No	: NA	
(61) Patent of Addition to Application Number	:NA	
Filing Date	:NA	
(62) Divisional to Application Number	:NA	
Filing Date	:NA	

(57) Abstract :
The present disclosure provides a vision based control of a reconfigurable soft robotic gripper. Conventional methods lack an intelligent control method which automatically adapts the configuration of the gripper based on the target object. The present disclosure includes a robotic gripper with a rigid palm and three soft fingers attached to the palm. Each finger is separately actuated using three separate motors. Out of the three fingers, one is fixed, and other two can move relative to the base, the motion of the movable fingers is actuated by motor(s). Each finger has multiple sensors to detect the magnitude of bending. A camera is attached to the base of the gripper, facing the object to be grasped. The camera image and the sensors measurements are given to a control unit and the control unit in turn gives the control signal to the actuator motors to suit the object to be grasped.

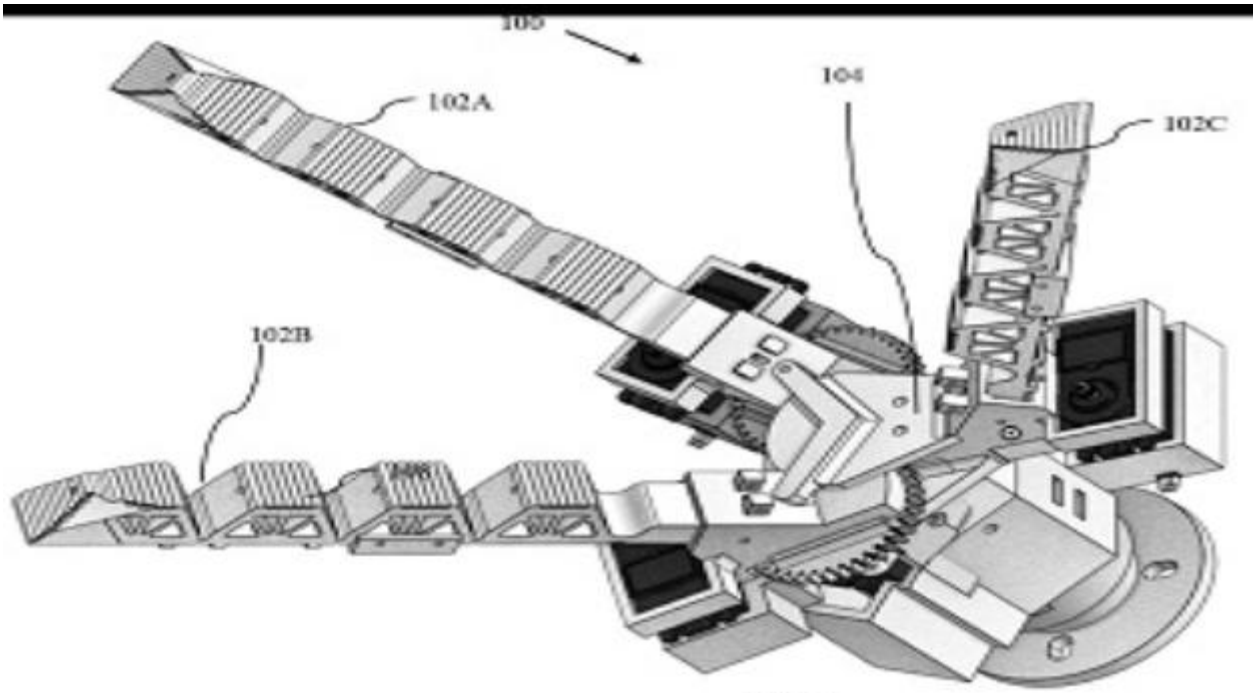

FIG. 1

No. of Pages : 37 No. of Claims : 3

(12) PATENT APPLICATION PUBLICATION
(21) Application No.202421037137 A
(19) INDIA
(22) Date of filing of Application :10/05/2024
(43) Publication Date : 14/11/2025

(54) Title of the invention : A process for preparation of amorphous dapagliflozin

(51) International classification	: C07D309/10, A61K31/351, A61P3/10	
(31) Priority Document No	:NA	
(32) Priority Date	:NA	
(33) Name of priority country	:NA	
(86) International Application No	:NA	
Filing Date	:NA	
(87) International Publication No	: NA	
(61) Patent of Addition to Application Number	:NA	
Filing Date	:NA	
(62) Divisional to Application Number	:NA	
Filing Date	:NA	

(71)**Name of Applicant :**
1)Titan Pharmaplus Private Limited
Address of Applicant :Ground Floor A/01, Plot No.120, Anand Bhavan Spectrum Building, Tilak Road, R. B. Mehta Marg, Ghatkopar East, Mumbai - 400077, Maharashtra, India Mumbai Maharashtra India
(72)**Name of Inventor :**
1)Shah Piyush Bhailal
2)Shah Deepak Bhailal
3)Kulkarni Pravin Shrinivasrao
4)Suryavanshi Padmakar Apparao
5)Jadhav Hemant Bhagawan

(57) Abstract :
A process for preparation of amorphous dapagliflozin The present invention relates to a process for preparation of amorphous dapagliflozin. An amorphous dapagliflozin obtained according to the present invention is stable and pharmaceutically acceptable and can be used in the preparation of pharmaceutical compositions of dapagliflozin.

No. of Pages : 14 No. of Claims : 10

(12) PATENT APPLICATION PUBLICATION
(21) Application No.202421037185 A
(19) INDIA
(22) Date of filing of Application :10/05/2024
(43) Publication Date : 14/11/2025

(54) Title of the invention : CRYSTALLINE POLYMORPH AND CO-CRYSTALS OF PIRTOBRUTINIB, PROCESSES FOR THEIR PREPARATION AND PHARMACEUTICAL COMPOSITIONS THEREOF

(51) International classification	:A61P35/00, A61K31/415, C07D231/38	
(31) Priority Document No	:NA	
(32) Priority Date	:NA	
(33) Name of priority country	:NA	
(86) International Application No	:NA	
Filing Date	:NA	
(87) International Publication No	: NA	
(61) Patent of Addition to Application Number	:NA	
Filing Date	:NA	
(62) Divisional to Application Number	:NA	
Filing Date	:NA	

(71)**Name of Applicant :**
1)SUN PHARMACEUTICAL INDUSTRIES LIMITED
Address of Applicant :SUN HOUSE, 201 B/1 WESTERN EXPRESS HIGHWAY, GOREGAON (E) MUMBAI MAHARASHTRA INDIA 400063 Mumbai Maharashtra India
(72)**Name of Inventor :**
1)SANTRA Ram Kinker
2)KANAWADE Sandeep T
3)SHANKAR Durga
4)SHAH Jigar
5)RAI Bishwa Prakash
6)NATH Asok
7)PRASAD Mohan

(57) Abstract :
The present invention relates to crystalline forms of Pirtobrutinib, co-crystals comprising Pirtobrutinib and a co-crystal former, wherein the co-crystal former is selected from the group consisting of glutaric acid, oxalic acid, and L-tryptophan, processes for their preparation, pharmaceutical formulations, and therapeutic uses thereof. The invention further relates to an improved process for the preparation of Pirtobrutinib and intermediates thereof.

No. of Pages : 65 No. of Claims : 11

(12) PATENT APPLICATION PUBLICATION
(21) Application No.202421037221 A
(19) INDIA
(22) Date of filing of Application :10/05/2024
(43) Publication Date : 14/11/2025

(54) Title of the invention : A SINGLE OR MULTISTAGE AIR COOLER, HEATER AND HUMIDIFIER WITH SIDE AIR OUTLET FROM TOP COVER

(51) International classification	:F24F0006040000, F24F0005000000, F02B0029040000, H01L0023467000, F24F0006000000	(71)**Name of Applicant :** **1)DINESH BALASAHEB UPHADE** Address of Applicant :AP VARKHEDA, TAL DINDORI, DIST NASHIK 422205 Maharashtra India
(31) Priority Document No	:NA	(72)**Name of Inventor :** **1)DINESH BALASAHEB UPHADE**
(32) Priority Date	:NA	**2)Sandip Nanasaheb Tuwar**
(33) Name of priority country	:NA	**3)Sachin Balshiram Auti**
(86) International Application No	:NA	
Filing Date	:NA	
(87) International Publication No	: NA	
(61) Patent of Addition to Application Number	:NA	
Filing Date	:NA	
(62) Divisional to Application Number	:NA	
Filing Date	:NA	

(57) Abstract :
According to the present disclosure, a single stage or a multi-stage evaporating equipment with side air outlet from top cover for space air cooling, heating or humidification as air cooler, heater and humidifier is disclosed. The single equipment comprises three modes of operation as air cooler, heater or humidifier according to the need. The multistage equipment as air cooler, heater and humidifier comprises at least two stages of evaporating modules; wherein each evaporating module comprises at least one round or obround shaped evaporating chamber formed by heat and mass transferring element. Each stage of evaporating module comprises at least one evaporating chamber formed by heat and mass transferring element with vertical axis pressurizing element near base section of evaporating module. The pressuring element acts as extracting element and induces the fresh air flow over wet evaporating element for effective air cooling, heating or humidification using water evaporation process.

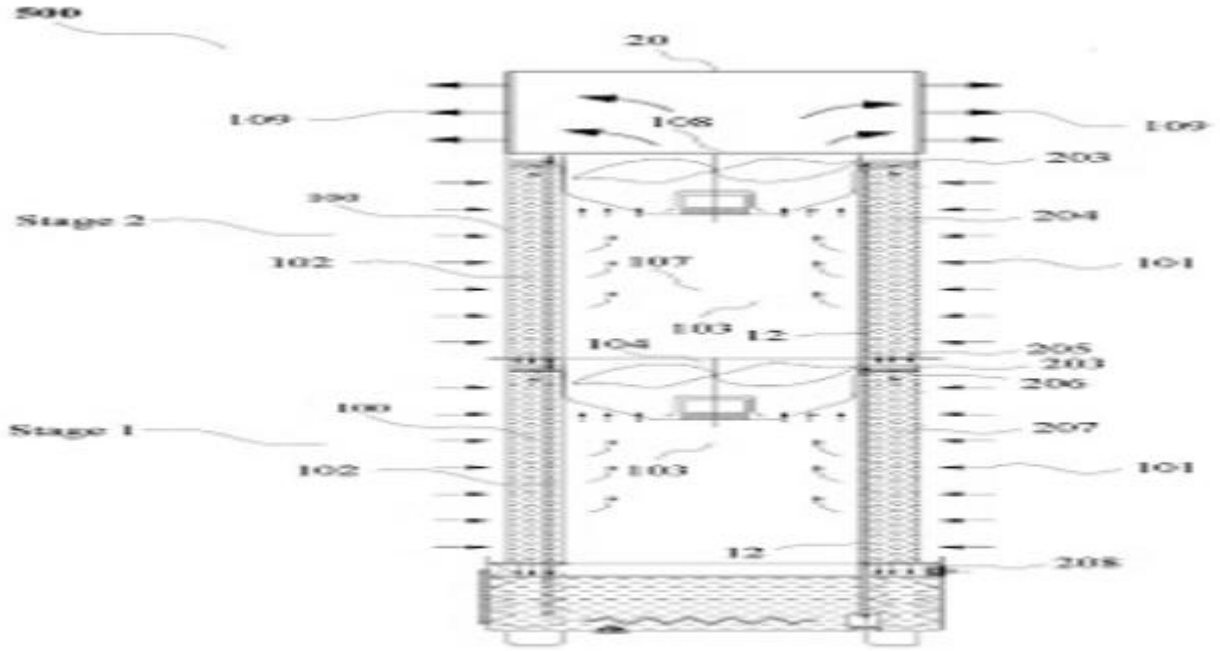

Figure 5

No. of Pages : 39 No. of Claims : 9

(12) PATENT APPLICATION PUBLICATION
(21) Application No.202421037224 A
(19) INDIA
(22) Date of filing of Application :10/05/2024
(43) Publication Date : 14/11/2025

(54) Title of the invention : INSTANT READY TO EAT BANANA HALWA/ SHEERA /UPMA BLEND (PREMIX)

(51) International classification	:A21D2/36, A23L19/00, A23L3/015
(31) Priority Document No	:NA
(32) Priority Date	:NA
(33) Name of priority country	:NA
(86) International Application No	:NA
Filing Date	:NA
(87) International Publication No	: NA
(61) Patent of Addition to Application Number	:NA
Filing Date	:NA
(62) Divisional to Application Number	:NA
Filing Date	:NA

(71)**Name of Applicant :**
1)Pradeep Yashwant Sarode
Address of Applicant :Pradeep Y Sarode S1/1306,Dev Ashoka, Ramchendra nagar, ESIC road, Thane -400604 Maharashtra India
(72)**Name of Inventor :**
1)Pradeep Yashwant Sarode

(57) Abstract :
ABSTRACT INSTANT READY TO EAT BANANA HALWA/ SHEERA /UPMA BLEND (PREMIX) PPROBLEM TO BE SOLVED: To provide a Sheera/halwa premix which Contains goodness of Banana , ,Packed with healthy fibre, Vitamins, Minerals and protein . Good for health. Tasty and Refreshing. Packed with nutrients. can be Instantly made and can be enjoyed anytime, anywhere. PSOLUTION: The present invention relates to highly nutritious Sheera premix blend comprising Banana flour as primary ingredient , with and without other nutritious flour/powder added blend is processed in fat and also having proper taste stimulating and taste enhancing agents can be reconstituted within 5 minutes by simple addition of boiled water

No. of Pages : 21 No. of Claims : 16

(12) PATENT APPLICATION PUBLICATION
(21) Application No.202421037275 A
(19) INDIA
(22) Date of filing of Application :11/05/2024
(43) Publication Date : 14/11/2025

(54) Title of the invention : METHOD AND SYSTEM FOR THE PREPARATION OF METHANOL FROM COAL

(51) International classification :C07C29/151
(31) Priority Document No :NA
(32) Priority Date :NA
(33) Name of priority country :NA
(86) International Application No :NA
Filing Date :NA
(87) International Publication No : NA
(61) Patent of Addition to Application Number :NA
Filing Date :NA
(62) Divisional to Application Number :NA
Filing Date :NA

(71)**Name of Applicant :**
1)THERMAX LIMITED
Address of Applicant :D- 13, MIDC Industrial. Area, R.D. Aga Road, Chinchwad, Pune-411019, Maharashtra, India Pune Maharashtra India
2)INDIAN INSTITUTE OF TECHNOLOGY DELHI
(72)**Name of Inventor :**
1)CHAITANYA MITRA
2)DEVKUMAR GUPTA
3)KIRAN CHAUHAN
4)SHRIRAJ MISAL
5)SUKUMARA POOJARI
6)DIGAMBAR PATIL
7)R. R. SONDE
8)SHANTANU ROY
9)DIVESH BHATIA
10)U. SREEDEVI
11)K. K. PANT
12)VIVEK V. BUWA

(57) Abstract :
ABSTRACT METHOD AND SYSTEM FOR THE PREPARATION OF METHANOL FROM COAL The present disclosure relates to a method and a system for the preparation of methanol from coal. The method comprises receiving coal, superheated steam, and oxygen to generate a syngas. The syngas is processed in a cooler system for removing fly ash present in the syngas through cyclone and dust filter, followed by removing impurities to produce partially cleaned syngas. The partially cleaned syngas is reacted with a steam and a catalyst followed by amine treatment to obtain a partially purified syngas which are then compressed and fed to the methanol synthesis unit to convert into methanol. The method of the present disclosure improves conversion efficiency of coal to methanol and can be able to handle different sizes of coal with different ash content. The system of the present disclosure is easy to operate and environment-friendly.

No. of Pages : 41 No. of Claims : 33

(12) PATENT APPLICATION PUBLICATION
(21) Application No.202421036850 A
(19) INDIA
(22) Date of filing of Application :09/05/2024
(43) Publication Date : 14/11/2025

(54) Title of the invention : SYSTEM AND METHOD FOR IDENTIFYING, ENHANCING, AND GENERATING MICROSERVICES APPLICATION PROGRAMMING INTERFACE (API) DESIGNS

(51) International classification	:G06F0016250000, G06F0016280000, G06F0040300000, H04L0051046000, G06F0009540000	(71)**Name of Applicant :** **1)Tata Consultancy Services Limited** Address of Applicant :Nirmal Building, 9th Floor, Nariman Point, Mumbai 400021, Maharashtra, India Mumbai Maharashtra India
(31) Priority Document No	:NA	(72)**Name of Inventor :**
(32) Priority Date	:NA	**1)LAGAD, Kiran Subhan**
(33) Name of priority country	:NA	**2)MAITI, Sudipta**
(86) International Application No	:NA	**3)SHAIKH, Kamruzzaman**
Filing Date	:NA	
(87) International Publication No	: NA	
(61) Patent of Addition to Application Number	:NA	
Filing Date	:NA	
(62) Divisional to Application Number	:NA	
Filing Date	:NA	

(57) Abstract :
Traditionally, application programming interface generation requests are placed to API platform team who review, interpret functionality, work on clarifications, and estimate timeline to design and build the API. This approach is not only time consuming but also leads to potential gaps in delivering API design that may not completely satisfy the business requirement. Embodiments of the present disclosure provide API design self-servicing creation systems and methods that learn and improve over the period. A System of Record (SoR) layer builds the SoR Metadata Repository containing the fields exposed by SoR, that enables enhancing and updating the business names, definitions, and business use cases, and finally, required API design is generated based on associated attributes identified using a fine-tuned user intent captured and identified through various touchpoints. The generated API design is then registered into an API platform for integration with desired environment(s).

FIG. 2

No. of Pages : 84 No. of Claims : 10

(12) PATENT APPLICATION PUBLICATION
(21) Application No.202421036875 A
(19) INDIA
(22) Date of filing of Application :08/05/2024
(43) Publication Date : 14/11/2025

(54) Title of the invention : An improved process for reducing content of nitrosamine impurity in drug substance.

(51) International classification	:B82Y0040000000, C07K0001160000, C07C0029940000, C07C0067280000, C07C0029141000	(71)**Name of Applicant :** **1)ALEMBIC PHARMACEUTICALS LIMITED** Address of Applicant :Alembic Research Centre, Alembic Pharmaceuticals Limited , Alembic Road, Vadodara Gujarat India
(31) Priority Document No	:NA	(72)**Name of Inventor :**
(32) Priority Date	:NA	**1)TOMER, Sanjiv**
(33) Name of priority country	:NA	**2)KANZARIYA, Kamlesh**
(86) International Application No	:NA	**3)NINAVE, Nikhil**
Filing Date	:NA	**4)PANCHAL, Jaykumar**
(87) International Publication No	: NA	**5)PANCHAL, Chirag**
(61) Patent of Addition to Application Number	:NA	
Filing Date	:NA	
(62) Divisional to Application Number	:NA	
Filing Date	:NA	

(57) Abstract :
ABSTRACT TITLE: “AN IMPROVED PROCESS FOR REDUCING CONTENT OF NITROSAMINE IMPURITY IN DRUG SUBSTANCE.” The present invention relates to process for reducing content of nitrosamine impurity represented by formula (II) in drug substance of formula (I) or its intermediate of formula (I) or its salt thereof, which comprises; subjecting drug substance of formula (I) or its intermediate of formula (I) or its salt thereof containing nitrosamine impurity (II) to hydrogenation reaction in presence of hydrogen source, metal catalyst and suitable solvent(s). Dated this: 20th of March 2025 Dr. S. Ganesan Alembic Pharmaceutical Ltd.

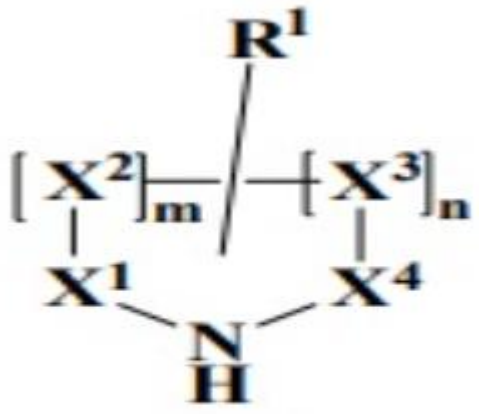

(I)

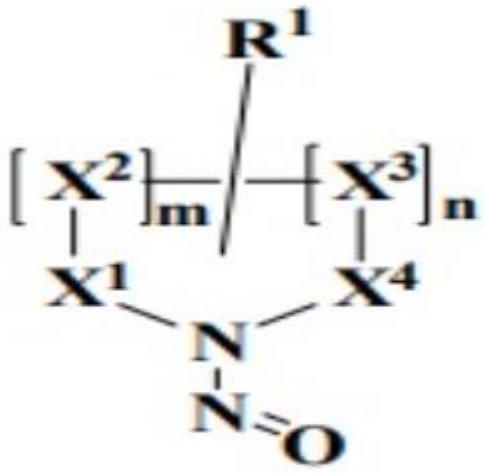

(II)

No. of Pages : 18 No. of Claims : 8

(12) PATENT APPLICATION PUBLICATION
(21) Application No.202421036908 A
(19) INDIA
(22) Date of filing of Application :10/05/2024
(43) Publication Date : 14/11/2025

(54) Title of the invention : DEVICE FOR DETECTING BREAKAGE OR ABSENCE OF PRIMARY YARN FOR CONTROLLING FINAL YARN PACKAGE QUALITY

(51) International classification	:D01H13/16, B65H63/024	(71)**Name of Applicant :**
(31) Priority Document No	:NA	**1)WEAVETECH ENGINEERS LIMITED**
(32) Priority Date	:NA	Address of Applicant :A/5-11 AND A/5 /4, GATE NO. 2, HOJIWALA INDUSTRIAL ESTATE, SACHIN UDYOGNAGAR SAHAKARI, ROAD 11, VANZ-SACHIN, SACHIN PALSANA ROAD, SURAT – 394230, GUJARAT, INDIA Surat Gujarat India
(33) Name of priority country	:NA	
(86) International Application No	:NA	
Filing Date	:NA	(72)**Name of Inventor :**
(87) International Publication No	: NA	**1)AMIT CHHAGANBHAI THUMAR**
(61) Patent of Addition to Application Number	:NA	**2)CHINTAN VALLABHBHAI THUMAR**
Filing Date	:NA	
(62) Divisional to Application Number	:NA	
Filing Date	:NA	

(57) Abstract :
Device (300) consisting of primary yarn breakage or absence sensor (100) and Human Machine Interface (HMI) display (200) in electronic communication with master controller (301) of twisting machine and, cutter control (108) in electronic communication with the primary yarn breakage or absence sensor (100) is disclosed. Said sensor (100) is consisting of spring lever (106), strain gauge (107) and controller (101). Strain gauge (107) is mounted on spring lever (106) and is configured to measure strain in spring lever (106) because of feeding of final twisted yarn (708). Controller (101) is in electronic communication with strain gauge (107) and cutter control (108) and is configured to compare strain measured by strain gauge (107) with set threshold strain value in master controller (301) and activate cutter control (108). Device detects breakage or absence or inadequate twisting of primary yarn or yarns in real time and takes corrective measures for preventing wastages. FIG. 1

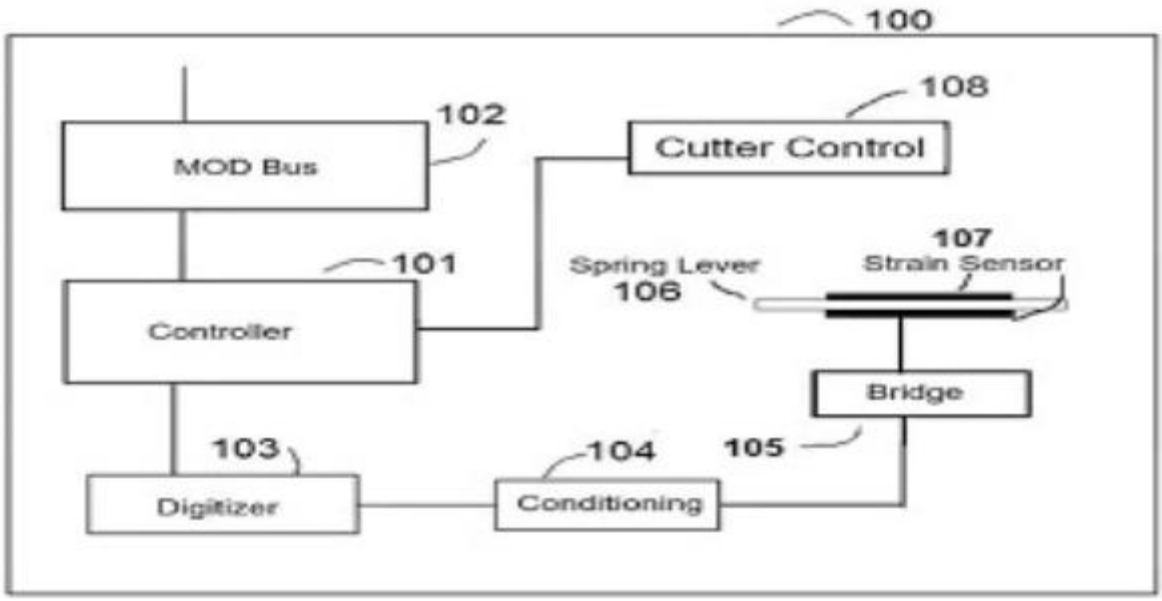

FIG. 1

No. of Pages : 24 No. of Claims : 7

(12) PATENT APPLICATION PUBLICATION
(21) Application No.202421036975 A
(19) INDIA
(22) Date of filing of Application :10/05/2024
(43) Publication Date : 14/11/2025

(54) Title of the invention : COLOUR FILTAR OF CAMERA PICTURE ELEMENT AND METHODE OF USE

(51) International classification	:H01G0009150000, H01L0043120000, B23P0019060000, G03F0007004000, H01L0031021600	(71)**Name of Applicant :** **1)AWADHOOT RAMCHANDRA AMRUTE** Address of Applicant : B-108, SHUBH APT., SUBHASH NAGAR, SUBHASH ROAD, MIRA ROAD, THANE - 401107, MAHARASHTRA, INDIA. Maharashtra India
(31) Priority Document No	:NA	(72)**Name of Inventor :** **1)AWADHOOT RAMCHANDRA AMRUTE**
(32) Priority Date	:NA	
(33) Name of priority country	:NA	
(86) International Application No	:NA	
Filing Date	:NA	
(87) International Publication No	: NA	
(61) Patent of Addition to Application Number	:NA	
Filing Date	:NA	
(62) Divisional to Application Number	:NA	
Filing Date	:NA	

(57) Abstract :
ABSTRACT The present invention is related to a pixel (picture element) for the camera. Basically, the present invention relates to a colour filter, which is part of a picture element (pixel). It is use in the camera which takes 5 photographs or moving pictures (videos). The invention relates to a colour filtration technique (method) tvhich filters the colour and passes to the camera's light receiving sensor.The present colour filter filters all colour shades, coming from an environment. The picture element is made up of colour filter layers and light receiving sensor. The colour filter layers is filtering colour and passes to the light receiving sensor (light receptors or photosites). The present colour filter of the picture element increases pixel density substantially 10 more than existing technology. The present pixel technology increases the resolution of the camera without corresponding increase in the dimensions of the camera sensor (light receiving sensor). The present picture element does not require any kind of fixed colour layer or RGB (red green blue) colour layer, which is used in existing picture element to filter colour. It is filter colour by variable colour filter, and filtering colour is set by the user. The filtering colour is controlled by the electrical current and voltage, and it is controlled by the user. FIG. 5

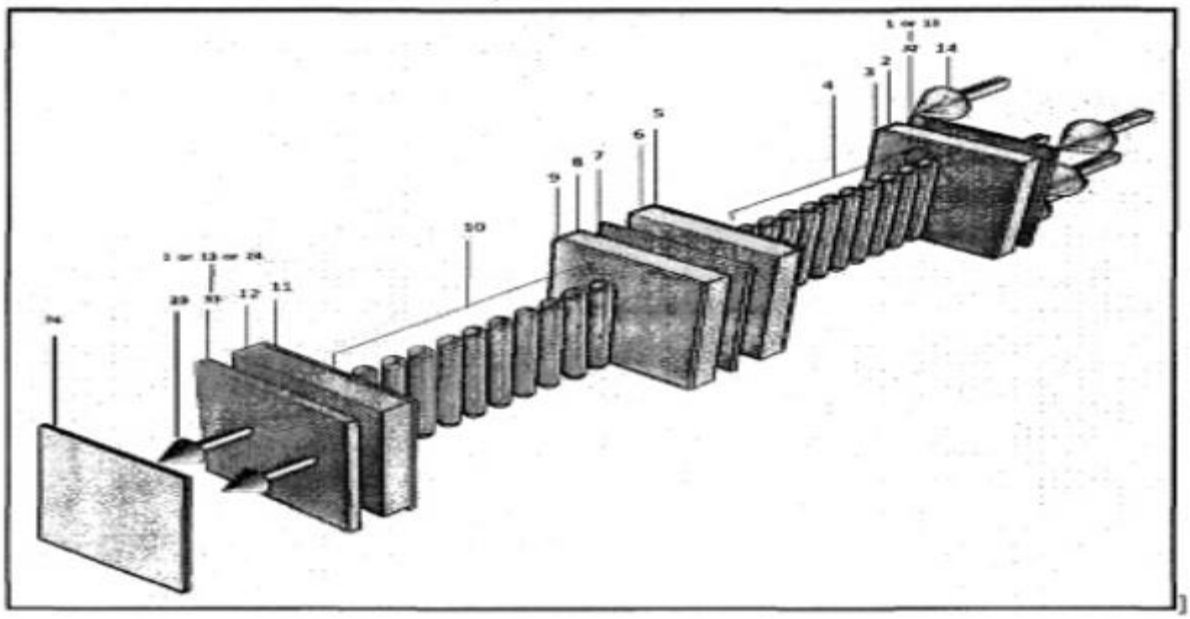

Fig. 5

No. of Pages : 19 No. of Claims : 28

(12) PATENT APPLICATION PUBLICATION
(21) Application No.202421036482 A
(19) INDIA
(22) Date of filing of Application :08/05/2024
(43) Publication Date : 14/11/2025

(54) Title of the invention : A METHOD AND SYSTEM FOR DETERMINING FUTURE DEMENTIA RISK ASSESSMENT IN CURRENTLY COGNITIVELY HEALTHY INDIVIDUALS

(51) International classification	:A61B0005055000, G16H0050300000, G06Q0010060000, G06F0001321200, A23L0029000000	(71)**Name of Applicant :** **1)Shailesh Vasudeo Pangaonkar** Address of Applicant :Srividya, 8, Nawab Layout, Tilak Nagar, Nagpur - 440010, Maharashtra, India Maharashtra India **2)Deepali Shailesh Pangaonkar**
(31) Priority Document No	:NA	(72)**Name of Inventor :**
(32) Priority Date	:NA	**1)Shailesh Vasudeo Pangaonkar**
(33) Name of priority country	:NA	**2)Deepali Shailesh Pangaonkar**
(86) International Application No	:NA	
Filing Date	:NA	
(87) International Publication No	: NA	
(61) Patent of Addition to Application Number	:NA	
Filing Date	:NA	
(62) Divisional to Application Number	:NA	
Filing Date	:NA	

(57) Abstract :
The present invention relates to a method and system for determining future dementia risk assessment in cognitively healthy individuals. In one embodiment, the method (100) comprising: generating (110) a list of data requests at user interface, receiving (120) responses from a cognitively healthy individual corresponding to the data requests generated at the user interface, creating (130) a structured data table of the received responses, and partitioning the created structured data table into a plurality of data segments, processing (140) the responses partitioned into plurality of data segments to generate one or more selfhood domain level scores based on the responses representing the plurality of selfhood domain parameters, using a proprietary data transformation protocol, generating (150) a selfhood profile of the individual based on the generated selfhood domain level scores, comparing (160) the generated selfhood profile of the individual with a plurality of selfhood profiles of other individuals stored in a database and determining (170) a future risk of dementia occurrence in the individual corresponding to the compared selfhood profile by applying a machine learning technique. Figure 1a (for publication).

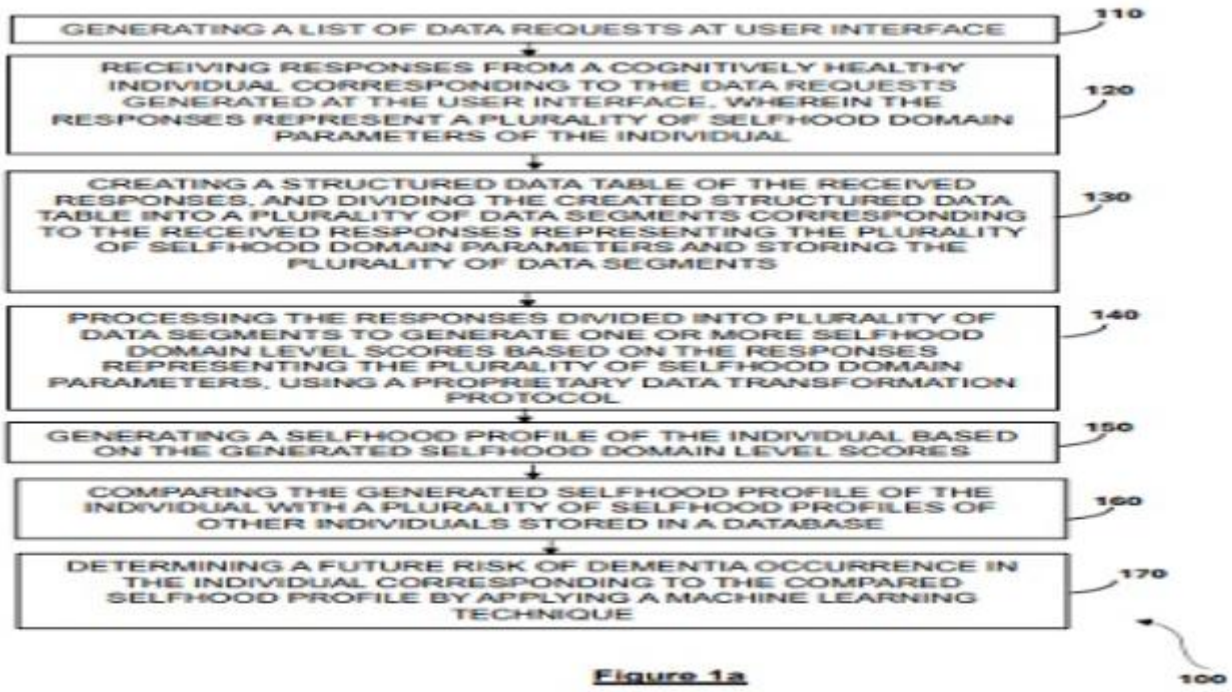

Figure 1a

No. of Pages : 44 No. of Claims : 16

(12) PATENT APPLICATION PUBLICATION

(21) Application No.202421036502 A

(19) INDIA

(22) Date of filing of Application :08/05/2024

(43) Publication Date : 14/11/2025

(54) Title of the invention : SYSTEMS AND METHODS FOR PREDICTING KEY PERFORMANCE INDICATORS FOR ENTITIES USING DATA DRIVEN BALANCING TECHNIQUES

(51) International classification	:G06Q0010060000, G06N0020000000, G06N0003080000, G06N0007000000, G06N0005040000	(71)**Name of Applicant :** **1)Tata Consultancy Services Limited** Address of Applicant :Nirmal Building, 9th Floor, Nariman Point, Mumbai 400021, Maharashtra, India Mumbai Maharashtra India
(31) Priority Document No	:NA	(72)**Name of Inventor :**
(32) Priority Date	:NA	**1)CHAVAN, Milind Kashinath**
(33) Name of priority country	:NA	**2)DESAI, Sadashiv Kamalakar**
(86) International Application No	:NA	**3)MAHALLE, Sarita Pralhadrao**
Filing Date	:NA	**4)MUTHUVADUGANATHAN, Aarthi**
(87) International Publication No	: NA	**5)VEDANTAM, Sriya Venkata Krishna**
(61) Patent of Addition to Application Number	:NA	**6)PRAJAPAT, Mahesh Kumar**
Filing Date	:NA	
(62) Divisional to Application Number	:NA	
Filing Date	:NA	

(57) Abstract :

Prediction of Key Performance Indicators (KPIs) is a common requirement across organizations/enterprises. Conventionally statistical analysis, machine learning, artificial intelligence, have been applied for prediction. However, the predictions are not accurate. Systems and methods of the present disclosure predict KPIs for dataset that pertain to entities by applying various data driven balancing (DDB) techniques. The dataset is processed for predicting KPIs distribution and DDB techniques are applied on distributed KPIs to analyse impact of prominent time period and time slots in KPIs to obtain updated data driven balancing based KPIs. The updated KPIs are analyzed with respect to historical data to obtain time slots and candidate KPI patterns. The system then applies a machine learning model on a time interval being selected based on the time slots and the candidate KPI patterns to obtain a predicted KPI pattern and re-balancing of KPIs is performed based on the predicted KPI pattern.

FIG. 2

No. of Pages : 40 No. of Claims : 8

(12) PATENT APPLICATION PUBLICATION
(21) Application No.202421036575 A
(19) INDIA
(22) Date of filing of Application :09/05/2024
(43) Publication Date : 14/11/2025

(54) Title of the invention : BALL COLLECTION AND IDENTIFICATION SYSTEM FOR COLLECTING BALLS AND SCORING BASED ON LOCATION

(51) International classification	:A63B0047020000, A63B0069360000, G06F0003160000, G06Q0050060000, A63B0063000000	(71)**Name of Applicant :** **1)LEAP91 SOLUTIONS PRIVATE LIMITED** Address of Applicant :LILY 31, NECO GARDENS, VIMAN NAGAR, PUNE 411014, MAHARASHTRA, INDIA Pune Maharashtra India
(31) Priority Document No	:NA	(72)**Name of Inventor :** **1)Narendra Thadani**
(32) Priority Date	:NA	**2)Paresh Deshmukh**
(33) Name of priority country	:NA	**3)Bhushan Walve**
(86) International Application No	:NA	**4)Mayank Nakrani**
Filing Date	:NA	**5)Piyush Deshmukh**
(87) International Publication No	: NA	
(61) Patent of Addition to Application Number	:NA	
Filing Date	:NA	
(62) Divisional to Application Number	:NA	
Filing Date	:NA	

(57) Abstract :
The purpose of the instant invention is to create a system for collection and identification of golf balls and a method of scoring for gamification. The invention combines mechanical techniques with state-of-the-art technology to create a reliable and cost-effective solution. Utilizing image processing algorithms, the system intelligently identifies golf balls originating from specific bays within the driving range and scores them based on their relative proximity to the Ball Collection and Identification System. The scored data is then displayed on a screen for user accessibility. This innovative approach promises to enhance operational efficiency and customer experience in driving range facilities.

Reference Figure: FIG. 4

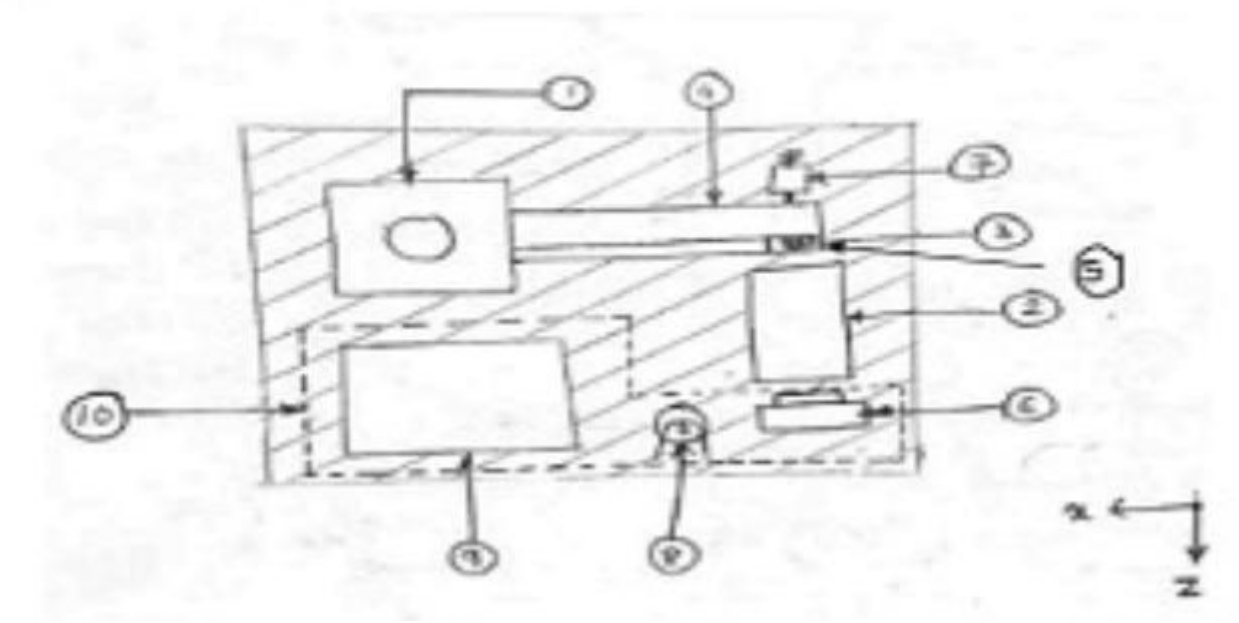

No. of Pages : 19 No. of Claims : 20

(12) PATENT APPLICATION PUBLICATION
(19) INDIA
(22) Date of filing of Application :25/02/2025
(21) Application No.202524016628 A
(43) Publication Date : 14/11/2025

(54) Title of the invention : BURNER AND COOKER

(51) International classification	:F23D0014460000, F23D0014580000, F23D0014620000, F24C0003080000, F23D0014020000	(71)**Name of Applicant :** **1)FOSHAN SHUNDE MIDEA WASHING APPLIANCES MANUFACTURING CO., LTD.** Address of Applicant :No. 20 Gangqian Road, Beijiao, Shunde, Foshan, Guangdong 528311, P.R. China China
(31) Priority Document No	:202410584180.6	(72)**Name of Inventor :**
(32) Priority Date	:11/05/2024	**1)ZHANG, Houkang**
(33) Name of priority country	:China	**2)YANG, Daoping**
(86) International Application No	:NA	
Filing Date	:NA	
(87) International Publication No	: NA	
(61) Patent of Addition to Application Number	:NA	
Filing Date	:NA	
(62) Divisional to Application Number	:NA	
Filing Date	:NA	

(57) Abstract :
Provided are a burner and a cooker. The burner includes a base, a gas distribution plate arranged at the base, and an outer ring fire cover arranged at the gas distribution plate. An outer ring gas mixing cavity is defined by the outer ring fire cover and the gas distribution plate. An outer ring fire hole in communication with the outer ring gas mixing cavity being formed on a circumferential side surface of the outer ring fire cover. A flow guide space is formed at a junction between the circumferential side surface of the outer ring fire cover and a top surface of the outer ring fire cover. The flow guide space is configured to guide secondary air above the outer ring fire cover to the circumferential side surface of the outer ring fire cover. With the above burner, the flow guide space is formed at the junction between the circumferential side surface of the outer ring fire cover and the top surface of the outer ring fire cover. The flow guide space can be configured to guide the secondary air above the outer ring fire cover to the circumferential side surface of the outer ring fire cover. Therefore, the secondary air can be supplemented to the outer ring fire hole, which is conducive to reducing smoke generated during combustion of the burner and enhancing an energy efficiency of the burner.

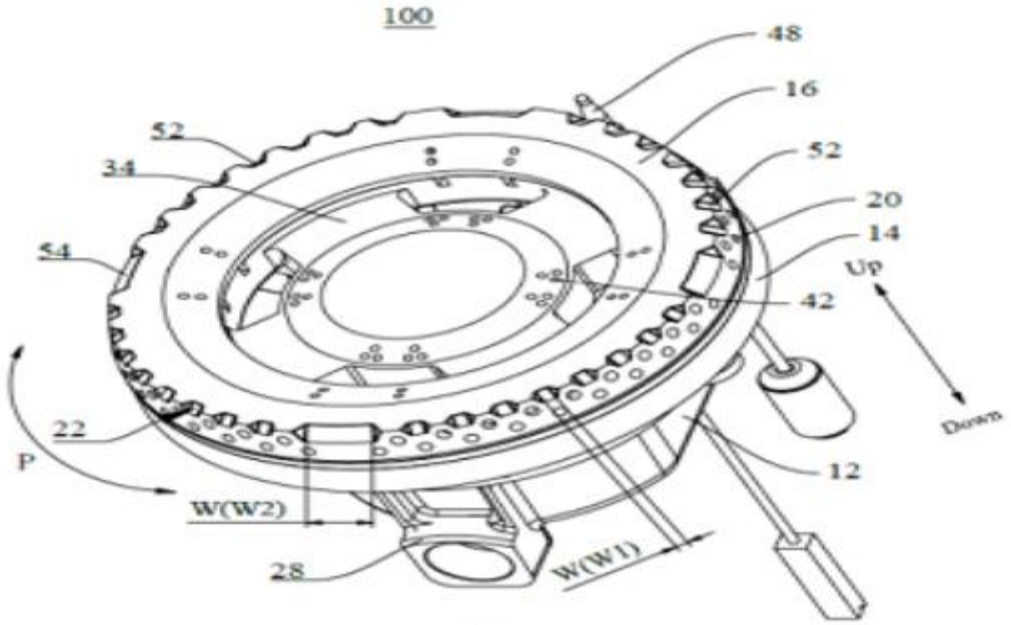

FIG. 1

No. of Pages : 100 No. of Claims : 15

(12) PATENT APPLICATION PUBLICATION
(21) Application No.202421037030 A
(19) INDIA
(22) Date of filing of Application :10/05/2024
(43) Publication Date : 14/11/2025

(54) Title of the invention : BRA

(51) International classification	:A41C3/10, A41C3/00, A41C3/14	
(31) Priority Document No	:NA	
(32) Priority Date	:NA	
(33) Name of priority country	:NA	
(86) International Application No	:NA	
Filing Date	:NA	
(87) International Publication No	: NA	
(61) Patent of Addition to Application Number	:NA	
Filing Date	:NA	
(62) Divisional to Application Number	:NA	
Filing Date	:NA	

(71)**Name of Applicant :**
1)VARSHA PRATIK MEHTA
Address of Applicant :G/603, Bhoomi Park, Phase - 1, Near Fire Brigade, Marve Road, Malad (W), Mumbai – 400 095, Maharashtra, India Mumbai Maharashtra India
2)PRATIK PUSHPAKANT MEHTA
(72)**Name of Inventor :**
1)VARSHA PRATIK MEHTA
2)PRATIK PUSHPAKANT MEHTA

(57) Abstract :
ABSTRACT BRA The present invention relates to an anti-sag bra having a pair of cups, wings extending from each of the cup, and shoulder straps extending from each of the cup to the wings. Each cup is made from a base material. The base material has an upper edge and a curved bottom edge. The upper edge has a tapering indent dividing the upper edge into a first upper edge and a second upper edge. The second upper edge capable of being pulled towards the first upper edge for overlapping a periphery of the first upper edge and the second upper edge and securing the first upper edge and the second upper edge and transforming the base material into the cup. Reference Figure 9

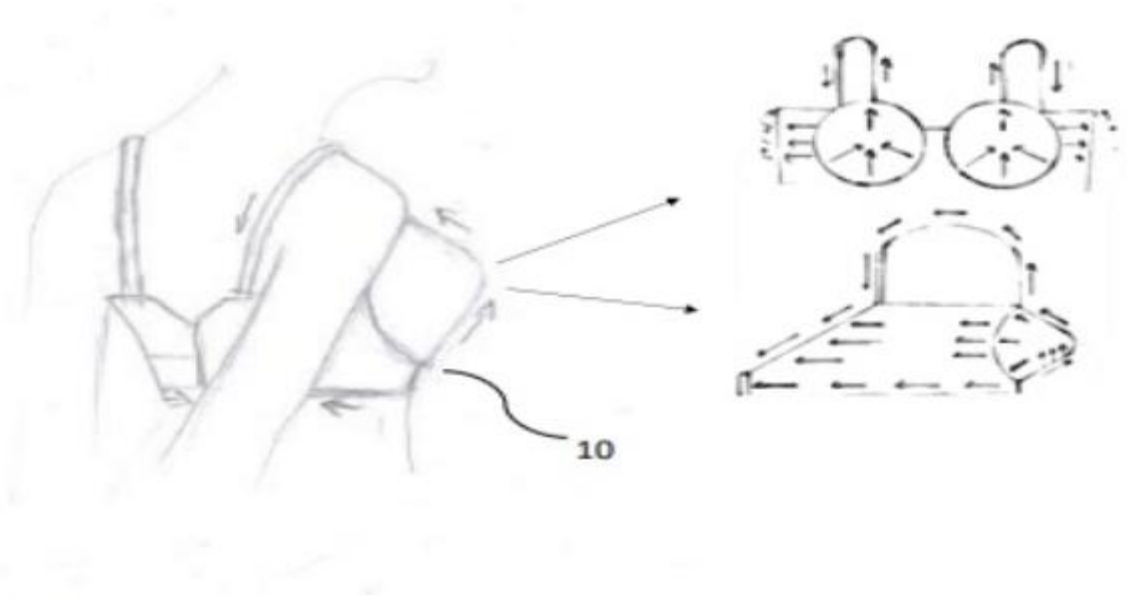

Figure 9

No. of Pages : 26 No. of Claims : 9

(12) PATENT APPLICATION PUBLICATION
(21) Application No.202424062907 A
(19) INDIA
(22) Date of filing of Application :20/08/2024
(43) Publication Date : 14/11/2025

(54) Title of the invention : DATA AUGMENTATION METHOD AND COMPUTING DEVICE THEREOF

(51) International classification	:G06T0003400700, H10K0059131000, G10L0015060000, G06N0020000000, G06T0005700000
(31) Priority Document No	:113116850
(32) Priority Date	:07/05/2024
(33) Name of priority country	:Argentina
(86) International Application No	:NA
Filing Date	:NA
(87) International Publication No	: NA
(61) Patent of Addition to Application Number	:NA
Filing Date	:NA
(62) Divisional to Application Number	:NA
Filing Date	:NA

(71)**Name of Applicant :**
1)Wistron Corporation
Address of Applicant :21F., No.88, Sec. 1, Hsintai 5th Rd., Hsichih, New Taipei City 22181, Taiwan (R.O.C.) Taiwan
(72)**Name of Inventor :**
1)Guan-Yi Chian

(57) Abstract :
ABSTRACT OF DISCLOSURE DATA AUGMENTATION METHOD AND COMPUTING DEVICE THEREOF A data augmentation method includes obtaining an input image and creating a plurality of output images corresponding to the input image. At least one first pixel of the input image is displaced to form one output image. The displacement of each first pixel is randomized. This overcomes the challenge when training data is scarce.

No. of Pages : 32 No. of Claims : 10

(12) PATENT APPLICATION PUBLICATION
(21) Application No.202524009649 A
(19) INDIA
(22) Date of filing of Application :06/02/2025
(43) Publication Date : 14/11/2025

(54) Title of the invention : CONNECTOR ADAPTER

(51) International classification	:H01R0031060000, H01R0107000000, H01R0024540000, A61B0005250000, H04N0021414000
(31) Priority Document No	:18/922579
(32) Priority Date	:13/05/2024
(33) Name of priority country	:U.S.A.
(86) International Application No	:NA
Filing Date	:NA
(87) International Publication No	: NA
(61) Patent of Addition to Application Number	:NA
Filing Date	:NA
(62) Divisional to Application Number	:NA
Filing Date	:NA

(71)**Name of Applicant :**
1)Deere & Company
Address of Applicant :One John Deere Place, Moline, Illinois, 61265 USA U.S.A.
(72)**Name of Inventor :**
1)OLSEN, HENRY C.

(57) Abstract :
A connector adaptor includes a housing having an inlet portion configured to receive a first connector from an in-cylinder position sensor and an outlet portion configured to receive a second connector. The first connector and second connector are push to connect connectors. The connector adapter includes an electrical connector interface within the housing. The electrical connector interface can convert an electrical connection of a first pin configuration to an electrical connection of a second pin configuration, wherein the first pin configuration has a different number of pins than the second pin configuration. The connector adaptor can be a right-angle or straight connector.

No. of Pages : 43 No. of Claims : 15

(12) PATENT APPLICATION PUBLICATION
(21) Application No.202421037345 A
(19) INDIA
(22) Date of filing of Application :12/05/2024
(43) Publication Date : 14/11/2025

(54) Title of the invention : INTELLIADS - AI POWERED PERSONALIZED ADVERTISEMENT CREATOR

(51) International classification	:G06Q0030020000, G06N0020000000, G06Q0050000000, A63F0013610000, G06F0016953500
(31) Priority Document No	:NA
(32) Priority Date	:NA
(33) Name of priority country	:NA
(86) International Application No	:NA
Filing Date	:NA
(87) International Publication No	: NA
(61) Patent of Addition to Application Number	:NA
Filing Date	:NA
(62) Divisional to Application Number	:NA
Filing Date	:NA

(71)**Name of Applicant :**
1)Vaishali Shamsingh Rajput
Address of Applicant :Vishwakarma Institute of Technology,Pune Maharashtra India
2)Siddhesh Shivaji Desai
3)Samarth Bura
4)Sandesh Bhagwat
5)Atharv Chakurkar
6)Chaitanya Sharma
(72)**Name of Inventor :**
1)Vaishali Shamsingh Rajput
2)Siddhesh Shivaji Desai
3)Samarth Bura
4)Sandesh Bhagwat
5)Atharv Chakurkar
6)Chaitanya Sharma

(57) Abstract :
The advertisement industry relies on reaching targeted audiences effectively to maximize engagement and sales. Personalized advertising allows companies to tailor their messages to individual preferences and behaviours, enhancing relevance and increasing the likelihood of conversion. IntelliAds is a platform designed to revolutionize the landscape of such kind of advertising. With the help of advanced algorithms and data analytics, IntelliAds empowers businesses to create advertisements across various formats, including text, audio and images. The platform integrates user personas, interests, geographic locations, and preferred languages, to deliver highly targeted advertising content. At its core, IntelliAds utilizes sophisticated machine learning techniques to analyze vast amount of user data and generate advertisements that resonate with individual preferences and behaviours, thus ensuring that each advertisement is optimized for maximum engagement and effectiveness. Additionally, IntelliAds serves multi-channel delivery capabilities; enabling businesses to distribute these AI generated advertisements across diverse communication channels such as social media platforms, email, and messaging services. This ensures that advertisements reach the intended audience through their preferred channels, enhancing the overall impact and reach of marketing campaigns. Therefore, IntelliAds represents a paradigm shift in the field of advertising, offering businesses unprecedented control and precision in reaching their target audience.

No. of Pages : 6 No. of Claims : 10

(12) PATENT APPLICATION PUBLICATION
(21) Application No.202423036214 A
(19) INDIA
(22) Date of filing of Application :07/05/2024
(43) Publication Date : 14/11/2025

(54) Title of the invention : SYSTEM FOR SWEEPING AND MOPPING A SURFACE

(51) International classification	: A47L11/40, A47L11/24, A47L11/292, A47L11/30, A47L5/30	(71)**Name of Applicant :** **1)SOLANKI, Gulab Singh** Address of Applicant :House No. 869, Near Kargil Chowk, Sundar Nagar, Raipur - 492013, Chhattisgarh, India. Raipur Chattisgarh India (72)**Name of Inventor :** **1)SOLANKI, Gulab Singh**
(31) Priority Document No	:NA	
(32) Priority Date	:NA	
(33) Name of priority country	:NA	
(86) International Application No	:NA	
Filing Date	:NA	
(87) International Publication No	: NA	
(61) Patent of Addition to Application Number	:	
Filed on	:01/01/1900	
(62) Divisional to Application Number	:NA	
Filing Date	:NA	

(57) Abstract :
The present invention comprises an improvement in, or a modification of the invention claimed in the specification of the main patent granted having patent number IN 391899 (for application number IN 202121026635). As an improvement or modification to the subject matter of the parent patent (number are recited above), the present invention by way of modification of improvement improves the overall efficiency of the system 100. The present patent of addition provides: Use of conveyor chain 114b instead of the mopping belt 114a. The conveyor chain 114b with a plurality of mopping rollers 110b is used in place of the mopping belt 114a to clean broad size of surface 200. Connectivity between motor 128 with wheels 130 to sit the user comfortably while using the system 100. Added the wet absorbent pad 134 to absorb the excess water which is gathered on the plurality of mopping rollers 110b.

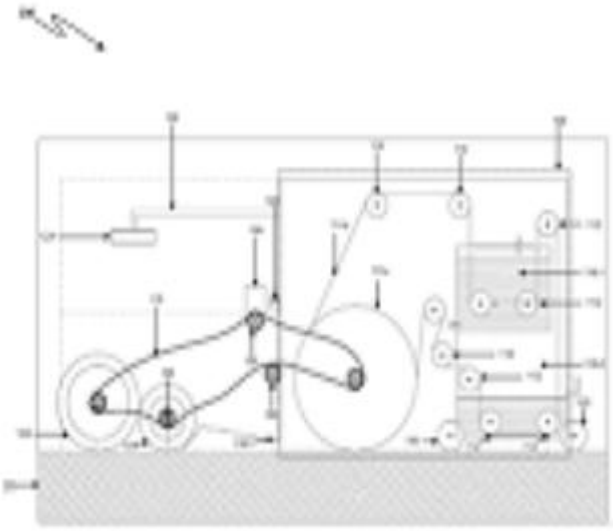

FIG 1

FIG 1

No. of Pages : 22 No. of Claims : 8

(12) PATENT APPLICATION PUBLICATION

(21) Application No.202341085157 A

(19) INDIA

(22) Date of filing of Application :13/05/2024

(43) Publication Date : 14/11/2025

(54) Title of the invention : AN ELECTROCHEMICAL CELL WITH PRESSURE CONTROLLED ELECTROLYTE FLOW FOR PRODUCTION OF ORGANIC AND INORGANIC CHEMICALS

(51) International classification	: C25B9/19	(71)**Name of Applicant :**
(31) Priority Document No	:NA	**1)Fertis India Private Limited**
(32) Priority Date	:NA	Address of Applicant :6-3-668/10/56, Plot No. 56, 1st Floor, Durga Nagar Colony Hyderabad – 500082, Telangana, India Telangana Telangana India
(33) Name of priority country	:NA	(72)**Name of Inventor :**
(86) International Application No	:NA	**1)KANUMURU, Rahul Raju**
Filing Date	:NA	
(87) International Publication No	: NA	
(61) Patent of Addition to Application Number	:NA	
Filing Date	:NA	
(62) Divisional to Application Number	:NA	
Filing Date	:NA	

(57) Abstract :

The present invention relates to a novel electrochemical cell and methods for using the same to produce organic and/ or inorganic chemicals and gases from single or multiple feed gas or liquid feed streams, comprising of a first gas diffusion electrode which is in contact and adjacent to the first electrolyte or gas compartment, and the second gas diffusion electrode which is in contact and adjacent to the second electrolyte or gas compartment. A porous spacer or separator or membrane is positioned between the first and second gas diffusion electrodes During the operation of the electrochemical cell, the gases produced in the electrochemical cell facilitate the recirculation of the electrolyte in the respective chambers from their respective reservoirs, which are transferred to the electrochemical cell by gravity without the need for external management systems like pumps.

No. of Pages : 36 No. of Claims : 24

(12) PATENT APPLICATION PUBLICATION
(19) INDIA
(22) Date of filing of Application :08/05/2024
(21) Application No.202441016970 A
(43) Publication Date : 14/11/2025

(54) Title of the invention : "MANAGING A DIGITAL POLICY ENFORCEMENT OF A DIGITAL TWIN IN A TELECOMMUNICATION SYSTEM""

(51) International classification	:H04W0036000000, G06Q0010060000, H04W0036020000, H04W0036140000, H04W0016180000
(31) Priority Document No	:NA
(32) Priority Date	:NA
(33) Name of priority country	:NA
(86) International Application No	:NA
Filing Date	:NA
(87) International Publication No	: NA
(61) Patent of Addition to Application Number	:NA
Filing Date	:NA
(62) Divisional to Application Number	:NA
Filing Date	:NA

(71)**Name of Applicant :**
1)Samsung Electronics Co., Ltd
Address of Applicant :129, Samsung-ro, Yeongtong-gu, Suwon-si, Gyeonggi-do 443-742, Republic of Korea Republic of Korea
(72)**Name of Inventor :**
1)Karthikeyan Subramaniam
2)Ganesh Chandrasekaran
3)Deepanshu Gautam
4)Ashutosh Kaushik
5)Chittaranjan Sahoo

(57) Abstract :
ABSTRACT "MANAGING A DIGITAL POLICY ENFORCEMENT OF A DIGITAL TWIN IN A TELECOMMUNICATION SYSTEM" Embodiments herein provide a method and system for managing a digital policy enforcement of a digital twin in a telecommunication system. The method includes generating a MOI request message to register PM data at a network DT apparatus (100). Further, the method includes transmitting the MOI request message to a MnS producer (200). Further, the method includes receiving a MOI response message from the MnS producer (200). Further, the method includes receiving a PM delivery message from the MnS producer (200) upon successful registration of the PM data, and a validation and a monitoring of the PM data performed by the MnS producer (200). Further, the method includes determining a movement pattern of users within the network DT apparatus (100) based on the the validation and monitoring of the PM data. Further, the method includes enforcing a policy recommendation for infrastructure management within the network DT apparatus (100). Fig. 4

No. of Pages : 50 No. of Claims : 14

(12) PATENT APPLICATION PUBLICATION
(21) Application No.202441035962 A
(19) INDIA
(22) Date of filing of Application :07/05/2024
(43) Publication Date : 14/11/2025

(54) Title of the invention : A DEPTH-ENHANCED NEURAL STATE SYSTEM AND METHOD FOR ACCURATE TRAFFIC LIGHT DETECTION AND CONTEXTUAL DECISION-MAKING IN AUTONOMOUS VEHICLES

(51) International classification	:G08G0001010000, G05D0001020000, H04N0007180000, G08G0001095000, B60W0040040000
(31) Priority Document No	:NA
(32) Priority Date	:NA
(33) Name of priority country	:NA
(86) International Application No	:NA
Filing Date	:NA
(87) International Publication No	: NA
(61) Patent of Addition to Application Number	:NA
Filing Date	:NA
(62) Divisional to Application Number	:NA
Filing Date	:NA

(71)**Name of Applicant :**
1)NMICPS Technology Innovation Hub On Autonomous Navigation Foundation
Address of Applicant :C/o Indian Institute of Technology Hyderabad, Kandi, Sangareddy, Telangana Kandi Telangana India
2)Indian Institute Of Technology Hyderabad
(72)**Name of Inventor :**
1)PROF. RAJALAKSHMI PACHAMUTHU
2)MR. KSHITIZ KUMAR
3)DR. SANTHOSH REDDY

(57) Abstract :
ABSTRACT A DEPTH-ENHANCED NEURAL STATE SYSTEM AND METHOD FOR ACCURATE TRAFFIC LIGHT DETECTION AND CONTEXTUAL DECISION-MAKING IN AUTONOMOUS VEHICLES The present invention relates to a depth-enhanced neural state system and method for accurate traffic light detection and contextual decision-making in autonomous vehicles under variable traffic conditions. The system comprises cameras (1) to capture images of the road ahead, but unlike regular cameras, they can also see depth information, creating a 3D picture. Processing unit (2) is a powerful computer that analyzes the images from the cameras. The system senses the 3D data and identifies traffic lights. Neural state machine (3) analyzes the information from the processing unit. Using the information about the traffic light from the system, the control unit can make decisions about stopping, going, or slowing down. To be published with Figures 1 and 2

No. of Pages : 19 No. of Claims : 4

(12) PATENT APPLICATION PUBLICATION
(21) Application No.202441035963 A
(19) INDIA
(22) Date of filing of Application :07/05/2024
(43) Publication Date : 14/11/2025

(54) Title of the invention : A REAL-TIME TRAFFIC SIGN RECOGNITION AND INTEGRATION SYSTEM FOR AUTONOMOUS VEHICLE NAVIGATION IN DIVERSE AND DYNAMIC DRIVING ENVIRONMENTS

(51) International classification	:G01C0021360000, G01C0021340000, G05D0001020000, G06Q0030020000, G08G0001096700
(31) Priority Document No	:NA
(32) Priority Date	:NA
(33) Name of priority country	:NA
(86) International Application No	:NA
Filing Date	:NA
(87) International Publication No	: NA
(61) Patent of Addition to Application Number	:NA
Filing Date	:NA
(62) Divisional to Application Number	:NA
Filing Date	:NA

(71)**Name of Applicant :**
1)NMICPS Technology Innovation Hub On Autonomous Navigation Foundation
Address of Applicant :C/o Indian Institute of Technology Hyderabad, Kandi, Sangareddy, Telangana Kandi Telangana India
2)Indian Institute Of Technology Hyderabad
(72)**Name of Inventor :**
1)PROF. RAJALAKSHMI PACHAMUTHU
2)MR. KSHITIZ KUMAR
3)DR. SANTHOSH REDDY

(57) Abstract :
ABSTRACT A REAL-TIME TRAFFIC SIGN RECOGNITION AND INTEGRATION SYSTEM FOR AUTONOMOUS VEHICLE NAVIGATION IN DIVERSE AND DYNAMIC DRIVING ENVIRONMENTS The present invention relates to a real-time traffic sign recognition and integration system for autonomous vehicle navigation in diverse and dynamic driving environments. This is an on-board system for autonomous vehicles that seamlessly integrates real-time traffic sign recognition with navigation. It improves upon existing navigation systems by providing a more comprehensive understanding of the driving environment through real-time traffic sign interpretation. To be published with Figure 1

No. of Pages : 28 No. of Claims : 4

(12) PATENT APPLICATION PUBLICATION
(21) Application No.202441036081 A
(19) INDIA
(22) Date of filing of Application :07/05/2024
(43) Publication Date : 14/11/2025

(54) Title of the invention : 6 DOF ROBOTIC ARM CONTROL USING ARDUINO UNO AND BLUETOOTH MODULE

(51) International classification	:B25J0009160000, B25J0009040000, B65G0001040000, B23Q0007040000, A47L0015000000	(71)**Name of Applicant :**
(31) Priority Document No	:NA	**1)SRIDHAR N**
(32) Priority Date	:NA	Address of Applicant :#132, aecs layout, CMR Institute of Technology Karnataka India
(33) Name of priority country	:NA	**2)SOPHIYA SUSAN S**
(86) International Application No	:NA	**3)NIYA PRASAD**
Filing Date	:NA	**4)P.PRATHIKA**
(87) International Publication No	: NA	**5)SHIVANI S MURTHY**
(61) Patent of Addition to Application Number	:NA	**6)CMR Institute of Technology**
Filing Date	:NA	(72)**Name of Inventor :**
(62) Divisional to Application Number	:NA	**1)SRIDHAR N**
Filing Date	:NA	**2)SOPHIYA SUSAN S**
		3)NIYA PRASAD
		4)P.PRATHIKA
		5)SHIVANI S MURTHY

(57) Abstract :
Robotic arm manipulators are used in many industrial and commercial applications. The arm that we have designed in this work has 6 DOF(Degrees of freedom) which gives it ample movement in 6 different axes. We have used 6 servo motors for accurate and quick arm movement. By interfacing it using the Arduino Uno it was fairly easy to program the 6 motors and run them simultaneously. A combination of 6 servo motors have been used, 3 MG996R servo motors for joints 1, 2, and 3, and SG90 micro-servo motors for joints 4,5, and 6 to facilitate the 6 DOF movements. The entire arm is controlled by a smartphone using the HC-05 Bluetooth module, thus making the user interface fairly simple. The proposed robotic arm performs pick and place operations with high accuracy, low power requirements, and minimum operating difficulty.

No. of Pages : 14 No. of Claims : 1

(12) PATENT APPLICATION PUBLICATION
(21) Application No.202441036176 A
(19) INDIA
(22) Date of filing of Application :07/05/2024
(43) Publication Date : 14/11/2025

(54) Title of the invention : LTM RECOVERY PROCEDURE IN DUAL CONNECTIVITY SYSTEMS

(51) International classification	:H04W0036000000, H04W0088080000, H04W0024100000, H04W0036300000, H04L0012540000
(31) Priority Document No	:NA
(32) Priority Date	:NA
(33) Name of priority country	:NA
(86) International Application No	:NA
Filing Date	:NA
(87) International Publication No	: NA
(61) Patent of Addition to Application Number	:NA
Filing Date	:NA
(62) Divisional to Application Number	:NA
Filing Date	:NA

(71)**Name of Applicant :**
1)Rakuten Symphony, Inc.
Address of Applicant :1-14-1 Tamagawa, Setagaya-ku, Tokyo 158-0094, Japan. Japan
(72)**Name of Inventor :**
1)Subramanya Chandrashekar

(57) Abstract :
Embodiments of the present disclosure disclose a method and a first distributed unit. The method comprises detecting a Lower-layer Triggered Mobility (LTM) execution failure of an LTM cell switch of a User Equipment (UE) (108) with a target cell hosted by a first distributed unit (1061); receiving measurement report of a plurality of LTM candidate cells belonging to a cell group associated with the failure, from the UE (108), from a centralised unit via a second distributed unit (1062), wherein the centralised unit is connected to the first distributed unit (1061) and the second distributed unit (1062); identifying a new target cell, wherein the new target cell is present in the plurality of LTM candidate cells belonging to a cell group associated with failure, for the LTM cell switch, based on the measurement report; and transmitting information of the new target cell to the UE (108), via the centralised unit (104) and the second distributed unit (1062), for performing the LTM cell switch.
FIGURES 1A AND 1B

No. of Pages : 52 No. of Claims : 15

(12) PATENT APPLICATION PUBLICATION
(21) Application No.202441036238 A
(19) INDIA
(22) Date of filing of Application :07/05/2024
(43) Publication Date : 14/11/2025

(54) Title of the invention : METHODS AND UE FOR ASSIGNING UNEQUAL MODULATION AND CODING SCHEME IN WIRELESS LOCAL AREA NETWORK

(51) International classification	:H04L0001000000, H04W0084120000, H04L0005000000, H04B0007060000, C12N0015670000	(71)**Name of Applicant :** **1)SAMSUNG ELECTRONICS CO., LTD.** Address of Applicant :129, Samsung-ro, Yeongtong-gu, Suwon-si, Gyeonggi-do 443-742, Republic of Korea Republic of Korea
(31) Priority Document No	:NA	(72)**Name of Inventor :** **1)Anand Jee**
(32) Priority Date	:NA	**2)Aniruddh Rao Kabbinale**
(33) Name of priority country	:NA	**3)Karthik Srinivasa Gopalan**
(86) International Application No	:NA	
Filing Date	:NA	
(87) International Publication No	: NA	
(61) Patent of Addition to Application Number	:NA	
Filing Date	:NA	
(62) Divisional to Application Number	:NA	
Filing Date	:NA	

(57) Abstract :
ABSTRACT “METHODS AND UE FOR ASSIGNING UNEQUAL MODULATION AND CODING SCHEME IN WIRELESS LOCAL AREA NETWORK” Embodiments disclose methods for assigning an unequal MCS in a wireless LAN by a UE (102). The method includes determining a number of spatial streams (NSS) per UE (102) associated with a user. The method includes determining a maximum difference in a MCS index allowed across different spatial streams per user. The method includes determining a type of unequal MCS to be enabled at the UE (102). The method includes identifying a primary spatial stream, based on the type of unequal MCS to be enabled at the UE (102). Further, the method includes enabling assignment of the at least one MCS index to all the spatial streams based on at least one of the NSS, the maximum difference in the MCS index allowed across different spatial streams per user, the type of unequa1 MCS to be enabled at the UE and the identification of the primary spatial stream. FIG. 1

No. of Pages : 44 No. of Claims : 11

(12) PATENT APPLICATION PUBLICATION
(21) Application No.202441036239 A
(19) INDIA
(22) Date of filing of Application :07/05/2024
(43) Publication Date : 14/11/2025

(54) Title of the invention : TECHNIQUES FOR A SELF-LEARNING SCALABLE EVENT BROKER

(51) International classification	:G06Q0010100000, G06F0009540000, H04L0051000000, H04L0067550000, H04L0067562000
(31) Priority Document No	:NA
(32) Priority Date	:NA
(33) Name of priority country	:NA
(86) International Application No	:NA
Filing Date	:NA
(87) International Publication No	: NA
(61) Patent of Addition to Application Number	:NA
Filing Date	:NA
(62) Divisional to Application Number	:NA
Filing Date	:NA

(71)**Name of Applicant :**
1)Oracle International Corporation
Address of Applicant :500 Oracle Parkway, Mail Stop 5OP7, Redwood Shores, California 94065 (US) U.S.A.
2)Indian Institute of Technology Roorkee
(72)**Name of Inventor :**
1)Manish Kumar Agrawal
2)Sandeep Kumar
3)Yogesh Kumar

(57) Abstract :
Techniques are disclosed for implementing a self-learning cloud-based message broker are disclosed. The message broker can receive an event trigger that includes information usable to identify a subscribing client of a publisher-subscriber messaging system. The message broker can determine message parameters for one or more messages by sampling a distribution. The message broker can determine the message parameters in response to receiving the event trigger. The message broker can send the one or more messages to the subscribing client. The one or more messages can be characterized by the message parameters. The message broker can receive a response status from the subscribing client and, based on the response status, update the distribution.

No. of Pages : 70 No. of Claims : 20

(12) PATENT APPLICATION PUBLICATION
(21) Application No.202441036258 A
(19) INDIA
(22) Date of filing of Application :07/05/2024
(43) Publication Date : 14/11/2025

(54) Title of the invention : WOUND HEALING WITH ZEOLITE-BASED BIOCERAMIC PATCH

(51) International classification	:A61P0017020000, A61L0026000000, A61K0009700000, A61F0013000000, A61K0033380000
(31) Priority Document No	:NA
(32) Priority Date	:NA
(33) Name of priority country	:NA
(86) International Application No	:NA
Filing Date	:NA
(87) International Publication No	: NA
(61) Patent of Addition to Application Number	:NA
Filing Date	:NA
(62) Divisional to Application Number	:NA
Filing Date	:NA

(71)**Name of Applicant :**
1)Rajeshwara Krishna Prasad Adluri
Address of Applicant :Rajapushpa Greendale, Tellapur Hyderabad Telangana India
(72)**Name of Inventor :**
1)Rajeshwara Krishna Prasad Adluri

(57) Abstract :
WOUND HEALING WITH ZEOLITE-BASED BIOCERAMIC PATCH Zio-Heal is an innovative medical device incorporating the Zeolite iodine complex in a woven fabric wound patch used for accelerated healing of both acute and chronic surface wounds. Weighing 6.50-6.75g, each sachet of this patch contains one Zio-heal. This medical innovation offers accelerated healing for various surface wounds, including abrasions, bites, pressure ulcers, venous ulcers, diabetic foot ulcers, and exuding or infected wounds. Zio-Heal, Zeolite-based wound patches leverage the unique properties of Zeolite, a naturally occurring mineral with exceptional adsorption capabilities, for wound management. These patches are designed to create an optimal wound-healing environment by absorbing excess exudate, promoting moisture balance, and potentially offering antimicrobial benefits. With their ability to aid in hemostasis and support tissue regeneration, Zeolite-based wound patches represent a promising approach to wound care, offering a multifaceted solution to promote healing and improve patient outcomes.

No. of Pages : 12 No. of Claims : 8

(12) PATENT APPLICATION PUBLICATION
(21) Application No.202441036274 A
(19) INDIA
(22) Date of filing of Application :07/05/2024
(43) Publication Date : 14/11/2025

(54) Title of the invention : SINGLE WIRE DUPLEX COMMUNICATION SYSTEM

(51) International classification	:H04L0005140000, G06F0013120000, H02J0050120000, G06F0013280000, G09G0003000000	(71)**Name of Applicant :** **1)M. S. Ramaiah University of Applied Sciences** Address of Applicant :University House, Gnanagangothri Campus, New BEL Road, M S R Nagar, Bengaluru -560054, Karnataka,India Bangalore Karnataka India
(31) Priority Document No	:NA	(72)**Name of Inventor :**
(32) Priority Date	:NA	**1)Ugra Mohan Roy**
(33) Name of priority country	:NA	**2)Sujithkumar Reddy Bommareddy**
(86) International Application No	:NA	
Filing Date	:NA	
(87) International Publication No	: NA	
(61) Patent of Addition to Application Number	:NA	
Filing Date	:NA	
(62) Divisional to Application Number	:NA	
Filing Date	:NA	

(57) Abstract :
Title: SINGLE WIRE DUPLEX COMMUNICATION SYSTEM The invention provides a single-wire full-duplex communication system that allows simultaneous bidirectional data transfer using a single conductor. The approach differentiates data directions by voltage-based signals in one direction and current-based signals in the other. The system comprises push-pull transmitters, sense resistors, comparators, and carefully selected MOSFET components. By merging two data lines into a single wire, it reduces cable complexity while maintaining throughput. The invention is particularly useful in space-constrained environments, offering potential integration with high-speed or low-latency protocols. Overall, it optimizes wiring infrastructure without sacrificing performance or reliability. Additionally, it demonstrates adaptability to both synchronous and asynchronous protocols.

No. of Pages : 24 No. of Claims : 10

(12) PATENT APPLICATION PUBLICATION
(21) Application No.202441036275 A
(19) INDIA
(22) Date of filing of Application :07/05/2024
(43) Publication Date : 14/11/2025

(54) Title of the invention : System for Automation of Groundnut Crop Production

(51) International classification	:G06Q0010060000, G06Q0030020000, G06Q0050020000, A61K0036480000, G06F0016350000
(31) Priority Document No	:NA
(32) Priority Date	:NA
(33) Name of priority country	:NA
(86) International Application No	:NA
Filing Date	:NA
(87) International Publication No	: NA
(61) Patent of Addition to Application Number	:NA
Filing Date	:NA
(62) Divisional to Application Number	:NA
Filing Date	:NA

(71)**Name of Applicant :**
1)M. S. Ramaiah University of Applied Sciences
Address of Applicant :University House, Gnanagangothri Campus, New BEL Road, M S R Nagar, Bengaluru -560054, Karnataka,India Bangalore Karnataka India
(72)**Name of Inventor :**
1)Srinivasa
2)B S Dayananda
3)Lokesh A C

(57) Abstract :
Title: System for Automation of Groundnut Crop Production The invention presents a modular mechanization system specifically designed for groundnut cultivation on small and medium farms in central agro-climatic zone. It integrates multiple essential farming operations, including ploughing, planting, weeding, and harvesting, into a single multifunctional machine equipped with customizable attachments. This system offers significant flexibility by allowing farmers to adapt the tools based on varying soil conditions, crop requirements, and seasonal variations. Engineered for affordability, the machine utilizes locally available parts, minimizing production and maintenance costs while ensuring ease of repair. Additionally, the system features an ergonomic design that enhances user comfort, allowing farmers to efficiently operate it with reduced physical strain. By addressing the labour-intensive nature of traditional farming, this invention helps alleviate dependency on manual labour, thus saving time and effort. It also improves overall productivity and streamlines cultivation processes, making farming more accessible and economically viable for small and marginal farmers. Field testing conducted in real farming conditions, along with positive feedback from farmers, validates its effectiveness and suitability for supporting sustainable agriculture in resource-constrained regions.

No. of Pages : 21 No. of Claims : 9

(12) PATENT APPLICATION PUBLICATION
(21) Application No.202441036276 A
(19) INDIA
(22) Date of filing of Application :07/05/2024
(43) Publication Date : 14/11/2025

(54) Title of the invention : OPTICAL MICRO RING RESONATOR BASED DECODER AND D-FLIP-FLOP

(51) International classification	:H04L0005140000, G06F0013420000, H04W0072080000, H04L0027260000, H04W0024080000
(31) Priority Document No	:NA
(32) Priority Date	:NA
(33) Name of priority country	:NA
(86) International Application No	:NA
Filing Date	:NA
(87) International Publication No	: NA
(61) Patent of Addition to Application Number	:NA
Filing Date	:NA
(62) Divisional to Application Number	:NA
Filing Date	:NA

(71)**Name of Applicant :**
1)M. S. Ramaiah University of Applied Sciences
Address of Applicant :University House, Gnanagangothri Campus, New BEL Road, M S R Nagar, Bengaluru -560054, Karnataka,India Bangalore Karnataka India
(72)**Name of Inventor :**
1)Ugra Mohan Roy
2)Vaishnavi Pataki

(57) Abstract :
Title: OPTICAL MICRO RING RESONATOR BASED DECODER AND D-FLIP-FLOP The present invention introduces a 2:4 optical decoder and an optical D flip-flop, both designed using micro-ring resonator (MRR) technology for high-speed, energy-efficient optical computing. The 2:4 optical decoder, constructed by interconnecting three 1:2 decoders, operates at a wavelength of 1.57 µm and occupies a compact area of 2.935×10^{12} nm². It ensures low power consumption and efficient signal processing. The optical D flip-flop utilizes MRRs to perform data storage and retrieval at wavelengths of 1.55 µm and 1.4 µm, leveraging the resonance properties of the MRR for fast and reliable operation. Optimized parameters, such as a waveguide width of 250 nm, height of 540 nm, and a ring radius of 4.7 µm, enable compactness and energy efficiency. Simulations validate the performance of both devices, highlighting their suitability for integration into advanced optical communication and computing systems requiring low power, miniaturized designs, and stable functionality.

No. of Pages : 19 No. of Claims : 8

(12) PATENT APPLICATION PUBLICATION
(21) Application No.202441036322 A
(19) INDIA
(22) Date of filing of Application :08/05/2024
(43) Publication Date : 14/11/2025

(54) Title of the invention : UV SPECTROPHOTOMETRIC TECHNIQUE FOR DETERMINING N-ACETYLCYSTEINE IN TABLET FORMULATION

(51) International classification	:G01J0003280000, G01N0021310000, A61K0009200000, G01J0003420000, G01S0005020000
(31) Priority Document No	:NA
(32) Priority Date	:NA
(33) Name of priority country	:NA
(86) International Application No	:NA
Filing Date	:NA
(87) International Publication No	: NA
(61) Patent of Addition to Application Number	:NA
Filing Date	:NA
(62) Divisional to Application Number	:NA
Filing Date	:NA

(71)**Name of Applicant :**
1)RAMA RAO NADENDLA
Address of Applicant :CHALAPATHI INSTITUTE OF PHARMACEUTICAL SCIENCES CHALAPATHI NAGAR LAM, GUNTUR Andhra Pradesh India
(72)**Name of Inventor :**
1)RAMA RAO NADENDLA
2)Dr.P.V.Suresh
3)Morla Siva Prasad

(57) Abstract :
UV Spectrophotometric technique for determining N-Acetylcysteine in tablet formulation using 0.1N NaOH as a diluent and a UV-Visible double-beam spectrophotometer. The drug's purity assessed using UV-Visible spectrophotometry, which validated parameters such as linearity, accuracy, precision, specificity, limit of detection and quantification. The method evaluated using statistical parameters, including precision, accuracy, linearity, recovery and robustness. The results showed no significant differences compared to other methods. The method can be used to analyse pharmaceutical formulations quickly.

No. of Pages : 24 No. of Claims : 3

(12) PATENT APPLICATION PUBLICATION
(21) Application No.202441036328 A
(19) INDIA
(22) Date of filing of Application :08/05/2024
(43) Publication Date : 14/11/2025

(54) Title of the invention : CITRULLUS LANATUS BASED PECTIN AS A POTENTIAL BIOPLASTIC FOR FOOD PACKAGING, PRESERVATION AND OTHER APPLICATIONS

(51) International classification	:G01N0021350000, A23L0029231000, C12N0015100000, B82Y0030000000, G01N0021356300	
(31) Priority Document No	:NA	
(32) Priority Date	:NA	
(33) Name of priority country	:NA	
(86) International Application No	:NA	
Filing Date	:NA	
(87) International Publication No	: NA	
(61) Patent of Addition to Application Number	:NA	
Filing Date	:NA	
(62) Divisional to Application Number	:NA	
Filing Date	:NA	

(71)**Name of Applicant :**
1)Dr. Jayaram LN
Address of Applicant :Assistant Professor (Dept of Biotechnology, DSCE) # 4, 3rd A Main, 9th Cross, Agrahara Dasarahalli, Bengaluru-560079,Karnataka, India. Bengaluru Karnataka India

(72)**Name of Inventor :**
1)Dr. Jayaram LN
2)Lakshmana NV
3)Nikhitha CR
4)Jagadesh
5)G Poojitha Krishna
6)Dr. Pradeep H N

(57) Abstract :
Title: Citrullus Lanatus Based Pectin as a Potential Bioplastic for Food Packaging, Preservation and other Applications The present invention provides a sustainable approach for developing biodegradable bioplastic films from Citrullus lanatus (watermelon) rind. Pectin is extracted using an acid-based extraction method and blended with pharmacopeia-approved plasticizers, polyvinyl alcohol (PVA), and natural polymers to create composite films through a solution casting technique. These films are evaluated for their mechanical strength, biodegradability, water retention capacity, and surface morphology using analytical tools such as Fourier Transform Infrared Spectroscopy (FTIR) and Scanning Electron Microscopy (SEM). The resulting films exhibit excellent tensile strength, rapid soil degradation, and effective moisture and pathogen barrier properties, making them a viable eco-friendly alternative to petroleum-based plastics for food packaging and preservation applications.

No. of Pages : 17 No. of Claims : 9

(12) PATENT APPLICATION PUBLICATION
(21) Application No.202441036329 A
(19) INDIA
(22) Date of filing of Application :08/05/2024
(43) Publication Date : 14/11/2025

(54) Title of the invention : Almond Gum Based Edible Gum Composite Films for Food Packaging,Preservation and other Applications

(51) International classification	:C08J0005180000, B65D0065460000, C08L0003020000, B29C0048000000, C08L0005000000	
(31) Priority Document No	:NA	
(32) Priority Date	:NA	
(33) Name of priority country	:NA	
(86) International Application No	:NA	
Filing Date	:NA	
(87) International Publication No	: NA	
(61) Patent of Addition to Application Number	:NA	
Filing Date	:NA	
(62) Divisional to Application Number	:NA	
Filing Date	:NA	

(71)**Name of Applicant :**
1)Dr. Jayaram LN
Address of Applicant :Assistant Professor (Dept of Biotechnology, DSCE) # 4, 3rd A Main, 9th Cross, Agrahara Dasarahalli, Bengaluru-560079,Karnataka, India. Bengaluru Karnataka India
(72)**Name of Inventor :**
1)Dr. Jayaram LN
2)Shivaani Mahenderkar
3)Megha S Chikkalli
4)Shreyanth C K

(57) Abstract :
Title: Almond Gum Based Edible Gum Composite Films for Food Packaging, Preservation and other Applications The present invention relates to a biodegradable and edible composite film designed for food packaging and preservation. This innovative film is primarily composed of almond gum and starch, blended in different proportions to achieve superior mechanical properties and enhanced preservation capability. Plasticizers such as glycerol and sorbitol are added to improve the film's flexibility and elasticity, while sodium alginate is incorporated to strengthen the film structure and reduce water absorption. The preparation process involves mixing almond gum and starch, casting the formulation onto a suitable surface, and air-drying it to form a thin, uniform film layer. The resulting film is not only effective in extending the shelf life of fruits and other perishable foods but also demonstrates excellent biodegradability when exposed to environmental conditions. With its non-toxic, eco-friendly composition, this composite film serves as a sustainable alternative to conventional plastic packaging materials, addressing growing environmental concerns related to plastic pollution.

No. of Pages : 16 No. of Claims : 9

(12) PATENT APPLICATION PUBLICATION
(21) Application No.202441036349 A
(19) INDIA
(22) Date of filing of Application :08/05/2024
(43) Publication Date : 14/11/2025

(54) Title of the invention : COMPARISON OF TENSILE MECHANICAL PROPERTIES OF COMPOSITE MATERIAL ONXY CARBON FIBER AND ULTEM 9085 P

(51) International classification	:G01N0003080000, B33Y0010000000, B33Y0080000000, B29C0064118000, B33Y0070000000
(31) Priority Document No	:NA
(32) Priority Date	:NA
(33) Name of priority country	:NA
(86) International Application No	:NA
Filing Date	:NA
(87) International Publication No	: NA
(61) Patent of Addition to Application Number	:NA
Filing Date	:NA
(62) Divisional to Application Number	:NA
Filing Date	:NA

(71)**Name of Applicant :**
1)NIRANJAN S
Address of Applicant :Department of Computer Science and Engineering, Bannari Amman Institute of Technology, Sathyamangalam, Erode(Dt),v Tamil Nadu-638401. Tamil Nadu India
2)JISHNU B A
3)KEERTHI C
4)SANJAY R
5)JANARTHAN S
6)CHANDRU R
7)NITHYASRI V
8)MADHUMITHA T
9)SIVAMOORTHI M
10)YASWANTH S
11)SANGAVI N
(72)**Name of Inventor :**
1)NIRANJAN S
2)JISHNU B A
3)KEERTHI C
4)SANJAY R
5)JANARTHAN S
6)CHANDRU R
7)NITHYASRI V
8)MADHUMITHA T
9)SIVAMOORTHI M
10)YASWANTH S
11)SANGAVI N

(57) Abstract :
Additive Manufacturing (AM) is a basic means for the production of prototypes. It has become one of the recognized manufacturing techniques. Fused Deposition Modeling (FDM) is one of the fast growing AM‘ technologies. The cunning study aims to compare the tensile strength of ONYX Carbon fiber and Ultem 9085 specimen manufactured by Fused Deposition Modeling (FDM). The study is performed on ONYX Carbon fiber and Ultem 9085. To compare the tensile strength on FDM machine using Universal Testing Machine (,UTM) and find the tensile strength. An ONYX Carbon fiber and Ultem 9085 specimen manufactured on a FDM machine; These also have superior mechanical properties. Tensile strength is done based on ASTM standard. The standard using in this study is ASTM (D638) and ASTM (D3039). The recommended specimen dimension is 100*10‘1.5mm. The tensile test was carried out by placing the specimen between the grips and an extensiveness is placed to automatically record the change in gauge length during the test and apply the load with total load specified on ASTM standards. Comparatively the ONYX Carbon fiber and Ultem 9085 have the better Tensile Strength than the other plastic materials produced by Additive Manufacturing methods

No. of Pages : 7 No. of Claims : 2

(12) PATENT APPLICATION PUBLICATION
(21) Application No.202441036350 A
(19) INDIA
(22) Date of filing of Application :08/05/2024
(43) Publication Date : 14/11/2025

(54) Title of the invention : A SYSTEM FOR GUIDING FISHERMAN IN OCEAN

(51) International classification	:H04W0004020000, G08B0025010000, H04W0004900000, G08B0021040000, G08B0025100000
(31) Priority Document No	:NA
(32) Priority Date	:NA
(33) Name of priority country	:NA
(86) International Application No	:NA
Filing Date	:NA
(87) International Publication No	: NA
(61) Patent of Addition to Application Number	:NA
Filing Date	:NA
(62) Divisional to Application Number	:NA
Filing Date	:NA

(71)**Name of Applicant :**
1)K.RAMAKRISHNAN COLLEGE OF ENGINEERING
Address of Applicant :The Principal, K.Ramakrishnan College of Engineering, NH-45, Samayapuram, Trichy, Tamil Nadu, India- 621112 Tamil Nadu India
(72)**Name of Inventor :**
1)Mrs.L.Amudha
2)Mr.P.Kasthuri Rengan
3)Mrs.S.Saranya
4)S.Noor Rahman
5)R.Yuvaraj
6)S.Natanesh

(57) Abstract :
ABSTRACT A SYSTEM FOR GUIDING FISHERMAN IN OCEAN The present invention discloses a device to comprehensive navigation and safety system designed to address the challenges faced by fishermen operating in coastal areas. The system comprises a compact device equipped with multiple features aimed at enhancing navigation, border monitoring, distress signalling, and legal protection for fishermen. The device incorporates a GPS (Global Positioning System) module to track the real-time location of fishermen and provides warnings when approaching maritime borders. This system further includes an alarm system to alert authorities and send distress signals to family members in case of potential border violations or emergencies. Additionally, the system features a log manager to record and store location data, serving as evidence to support fishermen in legal proceedings. Furthermore, the device includes a health monitoring system, enabling fishermen to send distress signals in case of health emergencies. This system automatically notifies emergency responders and family members, ensuring timely assistance. The invention offers a comprehensive solution to enhance the safety, security, and legal protection of fishermen, thereby contributing to the well-being of coastal communities. Fig 1

No. of Pages : 19 No. of Claims : 2

(12) PATENT APPLICATION PUBLICATION
(21) Application No.202441036351 A
(19) INDIA
(22) Date of filing of Application :08/05/2024
(43) Publication Date : 14/11/2025

(54) Title of the invention : PORTABLE ROAD DUST CLEANING DEVICE

(51) International classification	:E01H0001080000, B08B0015040000, G08G0001000000, A47L0007000000, B24B0055100000
(31) Priority Document No	:NA
(32) Priority Date	:NA
(33) Name of priority country	:NA
(86) International Application No	:NA
Filing Date	:NA
(87) International Publication No	: NA
(61) Patent of Addition to Application Number	:NA
Filing Date	:NA
(62) Divisional to Application Number	:NA
Filing Date	:NA

(71)**Name of Applicant :**
1)K.RAMAKRISHNAN COLLEGE OF ENGINEERING
Address of Applicant :The Principal, K.Ramakrishnan College of Engineering, NH-45, Samayapuram, Trichy, Tamil Nadu, India- 621112 Trichy Tamil Nadu India

(72)**Name of Inventor :**
1)Mr. B. Prakash
2)Veerabathiran C K
3)Hariram J
4)Shivasakthi velavan g
5)Srihari M

(57) Abstract :
ABSTRACT PORTABLE ROAD DUST CLEANING DEVICE The present invention discloses a portable road dust cleaning device for removing the dust/waste from the roadsides using the vehicle movement. The device comprises a body and a travel vehicle. The travel device is providing the support for the device movement. The rugged wheel (2) which is provided to withstand the varying terrain of roads, facilitating its movement from one location to another through the supporting wheels. The GSM module (12) integrated into the system which is configured to enable tracking of the machine's location for navigation purposes and centralized control. The sweeper system operates via motor-induced vibrations and is connected to a storage bag for collected debris. The sucking nozzle is incorporated into the machine to extract dust and debris from roadside areas, wherein the sucking nozzle operates with the assistance of a motor and is powered based on the supplied power. The rechargeable battery (10) serves as the primary power source for the machine, enabling its operation, wherein the microcontroller (8) serves as the central control unit, facilitating communication between the machine's components, tracking location via the GSM module, and automating motor operations for dust collection. The lifting device comprises a supporting member, wherein the control unit oversees the lifting method, elevating the wiping module from its initial position relative to the work surface to a higher position. Fig 1

No. of Pages : 24 No. of Claims : 4

(12) PATENT APPLICATION PUBLICATION
(21) Application No.202441036352 A
(19) INDIA
(22) Date of filing of Application :08/05/2024
(43) Publication Date : 14/11/2025

(54) Title of the invention : A TELE PROTECTOR SYSTEM

(51) International classification	:G06N0003080000, H04N0005225000, H04L0065600000, G06N0003040000, H04N0021454000
(31) Priority Document No	:NA
(32) Priority Date	:NA
(33) Name of priority country	:NA
(86) International Application No	:NA
Filing Date	:NA
(87) International Publication No	: NA
(61) Patent of Addition to Application Number	:NA
Filing Date	:NA
(62) Divisional to Application Number	:NA
Filing Date	:NA

(71)**Name of Applicant :**
1)K.RAMAKRISHNAN COLLEGE OF ENGINEERING
Address of Applicant :The Principal, K.Ramakrishnan College of Engineering, NH-45, Samayapuram, Trichy, Tamil Nadu, India- 621112 Trichy Tamil Nadu India

(72)**Name of Inventor :**
1)Mr.T.John Peter
2)Dr.T.M.Nithya
3)Mr.K.S. GuruPrakash
4)M.Ganesh Ram
5)S.V.Ajanthan
6)I.Joshua Santhosh
7)K.Giridharan

(57) Abstract :
ABSTRACT A TELE PROTECTOR SYSTEM The present invention discloses a tele protector system for protecting the eyes of the human/children. The system comprises a camera module capturing live video feed of an area surrounding a television, a Jetson Nano computing platform processing the live video feed in real-time, and a deep learning model trained to identify humans within proximity to the television based on the processed video feed. Additionally, the system includes a relay configured to cut off power supply to the television upon detection of a human within a predetermined distance from the television. An ultra-sonic sensor measures the distance between objects and the television, providing data to the relay for system operation, while a buzzer provides a warning if a human is detected near the television. The deep learning model utilizes advanced computer vision techniques, and the system incorporates a power-saving feature to minimize energy wastage. The present invention will reduce the eye problems in an effective manner. Fig 1

No. of Pages : 19 No. of Claims : 9

(12) PATENT APPLICATION PUBLICATION
(21) Application No.202441036353 A
(19) INDIA
(22) Date of filing of Application :08/05/2024
(43) Publication Date : 14/11/2025

(54) Title of the invention : BIODEGRADABLE AGAVE SISALANA SANITARY PADS

(51) International classification	:A61F0013472000, A61F0013537000, A61F0013150000, H05K0001020000, A61F0013470000
(31) Priority Document No	:NA
(32) Priority Date	:NA
(33) Name of priority country	:NA
(86) International Application No	:NA
Filing Date	:NA
(87) International Publication No	: NA
(61) Patent of Addition to Application Number	:NA
Filing Date	:NA
(62) Divisional to Application Number	:NA
Filing Date	:NA

(71)**Name of Applicant :**
1)K.RAMAKRISHNAN COLLEGE OF ENGINEERING
Address of Applicant :The Principal, K.Ramakrishnan College of Engineering, NH-45, Samayapuram, Trichy, Tamil Nadu, India- 621112 Trichy Tamil Nadu India

(72)**Name of Inventor :**
1)Deepashree K
2)Rohith Rishan M
3)P Charu Prabha
4)Charumathi J
5)Dharshini S
6)Dr.T.Muruganantham
7)Mr.N.R.Nagarajan
8)Mr.R.Balamurugan

(57) Abstract :
ABSTRACT BIODEGRADABLE AGAVE SISALANA SANITARY PADS The present invention discloses a preparation method of biodegradable agave sisalana sanitary pads for controlling the usage of synthetic napkins to avoid the irritation/pollution/health problems. The sanitary pads comprising the layers of a top thin layer is having the mixture of sisal and cotton material for acting as the antiseptic agent. The absorbent core layer is thicker than the top layer which is located at the below of top layer and configured to absorb the mensural fluid. The acquisition layer is positioned in between the top and absorbent layer which is configured to absorb the fluid. The secondary layer comprises the cotton and agave mixer cloth which is configured to spread the mensural fluid in the entire pad in an even distribution manner. The back layer is act as the waterproof resistant which is avoiding the leakage of the stain and also allowing air to circulate for breathable to avoid some rashes and irritation in the skin. The disposal baggage can be inserted within a back layer for disposing of the pads in the dustbin. The pair of wings is provided flap to fold and attach with the underwear. The adhesive layer or bottom layer is configured to attach and stuck with the underwear and it is attached to the back layer of the sanitary pads with disposal baggage. The present invention will provide an alternative solution for the usage of synthetic pads. Fig 1

No. of Pages : 24 No. of Claims : 2

(12) PATENT APPLICATION PUBLICATION
(21) Application No.202441036354 A
(19) INDIA
(22) Date of filing of Application :08/05/2024
(43) Publication Date : 14/11/2025

(54) Title of the invention : PNEUMATIC STAPLER MACHINE

(51) International classification	:B25C0005020000, B25C0001040000, B25C0005160000, B01D0053053000, B27F0007340000
(31) Priority Document No	:NA
(32) Priority Date	:NA
(33) Name of priority country	:NA
(86) International Application No	:NA
Filing Date	:NA
(87) International Publication No	: NA
(61) Patent of Addition to Application Number	:NA
Filing Date	:NA
(62) Divisional to Application Number	:NA
Filing Date	:NA

(71)**Name of Applicant :**
1)K.RAMAKRISHNAN COLLEGE OF ENGINEERING
Address of Applicant :The Principal, K.Ramakrishnan College of Engineering, NH-45, Samayapuram, Trichy, Tamil Nadu, India- 621112 Trichy Tamil Nadu India

(72)**Name of Inventor :**
1)EDWIN SANTHOSH J
2)RAGUL S
3)REVANTH P
4)SUGEERTH P
5)Mr. M. MANIMARAN

(57) Abstract :
ABSTRACT PNEUMATIC STAPLER MACHINE The present invention discloses a pneumatic stapler machine for stapling the plurality of pages in a same time using the compressed air control. The pneumatic stapler machine comprises a power source and a frame. The machine also comprises an air compressor, piston and a trigger. The air compressor (4) or an air hose connection that supplies compressed air to the tool, wherein the air compressor (4) pressurizes the air, storing it in a tank or delivering it through the air hoses. The piston is connected to a driver blade or anvil at the front end, wherein the piston moves forward, it pushes the driver blade, which, in turn, forcefully ejects a single staple from the magazine. The trigger activates a valve, which allows compressed air to enter the stapler. This innovative machine aims to revolutionize stapling processes in these environments, offering enhanced efficiency and convenience. The Pneumatic Stapling Machine is poised to become an indispensable tool in various professional settings, driving productivity and facilitating seamless operations. Fig 1

No. of Pages : 18 No. of Claims : 4

(12) PATENT APPLICATION PUBLICATION
(21) Application No.202441036355 A
(19) INDIA
(22) Date of filing of Application :08/05/2024
(43) Publication Date : 14/11/2025

(54) Title of the invention : A MOBILE FINGERPRINT BASED ATTENDANCE REGISTER SYSTEM

(51) International classification	:G06F0021320000, G06F0021620000, G06F0021570000, G06F0021530000, G06F0021600000
(31) Priority Document No	:NA
(32) Priority Date	:NA
(33) Name of priority country	:NA
(86) International Application No	:NA
Filing Date	:NA
(87) International Publication No	: NA
(61) Patent of Addition to Application Number	:NA
Filing Date	:NA
(62) Divisional to Application Number	:NA
Filing Date	:NA

(71)**Name of Applicant :**
1)K.RAMAKRISHNAN COLLEGE OF ENGINEERING
Address of Applicant :The Principal, K.Ramakrishnan College of Engineering, NH-45, Samayapuram, Trichy, Tamil Nadu, India- 621112 Trichy Tamil Nadu India

(72)**Name of Inventor :**
1)Dr.T.M.Nithya
2)Dr.Y.Arockia Jesuraj
3)Mr.T.John Peter
4)V. Harii Kumaran
5)K.Gowtham

(57) Abstract :
ABSTRACT A MOBILE FINGERPRINT BASED ATTENDANCE REGISTER SYSTEM The present invention discloses a mobile fingerprint based attendance register system for identifying the presence of the members/students in a restricted region. The mobile fingerprint based system comprises a mobile. The mobile is configured to capture multiple images of a user's fingerprint from different angles using the smartphone's fingerprint sensor. The fingerprint template is stored within a Trusted Execution Environment (TEE) for enhanced security. The processor is configured to execute the captured fingerprint data to create a unique template. The memory module is provided for securely storing the fingerprint template within the smartphone's memory or a designated secure area. Fig 1

No. of Pages : 17 No. of Claims : 3

(12) PATENT APPLICATION PUBLICATION
(21) Application No.202441036377 A
(19) INDIA
(22) Date of filing of Application :08/05/2024
(43) Publication Date : 14/11/2025

(54) Title of the invention : PROCESS FOR THE PREPARATION OF LENACAPAVIR OR ITS PHARMACEUTICALLY ACCEPTABLE SALTS

(51) International classification	:C07D401/14, A61K31/4439, A61P31/18, A61K9/00
(31) Priority Document No	:NA
(32) Priority Date	:NA
(33) Name of priority country	:NA
(86) International Application No	:NA
Filing Date	:NA
(87) International Publication No	: NA
(61) Patent of Addition to Application Number	:NA
Filing Date	:NA
(62) Divisional to Application Number	:NA
Filing Date	:NA

(71)**Name of Applicant :**
1)HETERO LABS LIMITED
Address of Applicant :Hetero Labs Limited, Hetero Corporate 7-2-A2, Industrial Estate, Sanath Nagar, Hyderabad – 500018, Telangana, India. Hyderabad Telangana India
(72)**Name of Inventor :**
1)PARTHASARADHI REDDY, Bandi
2)RATHNAKAR REDDY, Kura
3)VAMSI KRISHNA, Bandi
4)UTTAM KUMAR, Ray
5)VENKAT NARSIMHA REDDY, Adulla
6)SRINIVAS, Chitti

(57) Abstract :
The present invention relates to a process for the preparation of Lenacapavir or its pharmaceutically acceptable salts, wherein involves propylphosphonic anhydride as amide coupling reagent.

No. of Pages : 15 No. of Claims : 4

(12) PATENT APPLICATION PUBLICATION
(21) Application No.202441036389 A
(19) INDIA
(22) Date of filing of Application :08/05/2024
(43) Publication Date : 14/11/2025

(54) Title of the invention : INTELLIGENT LOGISTICS VEHICLE SECURITY SYSTEM

(51) International classification	:G06Q0010080000, G07C0009000000, B60R0025100000, A61B0005000000, G06N0020000000	(71)**Name of Applicant :** **1)ANI ABRAHAM JOY** Address of Applicant :SECTORQUBE TECHNOLABS PVT LTD, 1ST FLOOR, A&A TOWERS, VADAKODE PO, KALAMASSERY Kerala India (72)**Name of Inventor :** **1)Nibu Alias** **2)Ani Abraham Joy** **3)Sabarish Prakash** **4)Midhun Skaria** **5)Arjun Sarath** **6)Binyas Valiyaveettil Latheef**
(31) Priority Document No	:NA	
(32) Priority Date	:NA	
(33) Name of priority country	:NA	
(86) International Application No	:NA	
Filing Date	:NA	
(87) International Publication No	: NA	
(61) Patent of Addition to Application Number	:NA	
Filing Date	:NA	
(62) Divisional to Application Number	:NA	
Filing Date	:NA	

(57) Abstract :
The present invention discloses an Intelligent Logistics Vehicle Security System designed to enhance the security and efficiency of cargo transportation. The system integrates advanced technologies, including artificial intelligence, sensors, and communication modules, to provide a comprehensive solution for real-time monitoring, threat detection, and adaptive response within logistics vehicles.

No. of Pages : 15 No. of Claims : 24

(12) PATENT APPLICATION PUBLICATION
(21) Application No.202441036390 A
(19) INDIA
(22) Date of filing of Application :08/05/2024
(43) Publication Date : 14/11/2025

(54) Title of the invention : FIXED TYPE INACCESSIBLE INTELLIGENT ROLLING SHUTTER LOCK

(51) International classification	:H04N0005353000, G07C0009000000, A61N0001360000, E06B0009150000, H04L0009080000
(31) Priority Document No	:NA
(32) Priority Date	:NA
(33) Name of priority country	:NA
(86) International Application No	:NA
Filing Date	:NA
(87) International Publication No	: NA
(61) Patent of Addition to Application Number	:NA
Filing Date	:NA
(62) Divisional to Application Number	:NA
Filing Date	:NA

(71)**Name of Applicant :**
1)ANI ABRAHAM JOY
Address of Applicant :SECTORQUBE TECHNOLABS PVT LTD, 1ST FLOOR, A&A TOWERS, VADAKODE PO, KALAMASSERY Kerala India
(72)**Name of Inventor :**
1)Nibu Alias
2)Ani Abraham Joy
3)Sabarish Prakash
4)Midhun Skaria
5)Arjun Sarath
6)Binyas Valiyaveettil Latheef

(57) Abstract :
The present invention discloses a Fixed Type Inaccessible Intelligent Rolling Shutter Lock designed to enhance the security of commercial and residential spaces. The lock system integrates smart technologies, including sensors, actuators, and a secure communication module, providing a robust and convenient solution for securing rolling shutters. The mechanism and the electronics are designed to be inaccessible from outside once the Rolling shutter is locked.

No. of Pages : 13 No. of Claims : 14

(12) PATENT APPLICATION PUBLICATION

(21) Application No.202441036410 A

(19) INDIA

(22) Date of filing of Application :08/05/2024

(43) Publication Date : 14/11/2025

(54) Title of the invention : METHOD AND SYSTEM FOR DEPOSITING AGINS2 FILMS VIA PULSE PLATING: CONTROLLING STRUCTURAL, ELECTRICAL,

(51) International classification	:H01G0009200000, H01L0029490000, C23C0014080000, H01B0001080000, H01M0014000000
(31) Priority Document No	:NA
(32) Priority Date	:NA
(33) Name of priority country	:NA
(86) International Application No	:NA
Filing Date	:NA
(87) International Publication No	: NA
(61) Patent of Addition to Application Number	:NA
Filing Date	:NA
(62) Divisional to Application Number	:NA
Filing Date	:NA

(71)**Name of Applicant :**

1)THIRUMOORTHY M

Address of Applicant :DEPARTMENT OF PHYSICS, BANNARI AMMAN INSTITUTE OF TECHNOLOGY ALATHUKOMBAI POST, SATHYAMANGALAM, ERODE DISTRICT, TAMIL NADU- 638401. Tamil Nadu India

2)SADASIVAM K

3)ASHOKAN S

4)VANITHA K

5)SELVAKUMAR K

(72)**Name of Inventor :**

1)THIRUMOORTHY M

2)SADASIVAM K

3)ASHOKAN S

4)VANITHA K

5)SELVAKUMAR K

(57) Abstract :

AgInSz films are deposited on conducting glass substrates coated in fin oxide at various duty cycles between 6 and 50% with a - 1.14 V (SCE) deposition potential. With increasing duty cycle, the thickness of the films, as measured by the Mitutoyo surface profilometcr, varied between 400 and 900 nm. AglnSz films made at various duty cycles have polycrystalline nature X-ray diffraction diagrams showing peaks equal to single-phase AglnSz‘ XPS tests were conducted on the films deposited at a 50% duty cycle. The binding energies of Ag 3d5/2 and Ag 3d3/2 may be assigned to the peaks at 36734 eV and 373.42 cV in the Ag 3d spectrum, respectively. The binding energies of Jn 3d5/2 and In 3dm are responsible for the two significant peaks in the In 3d spectra at 44434 eV and 451.85 eV, respectively. The S 2p Transitions binding energy can be given to the peaks al l6|.45 CV atomic force image of AgInSz films with different duty cycles. Surface roughness and Grain size decrease as The duty cycle increases. With the duty cycle, the film's resistance and mobility increased. As the duty cycle increased, carrier density decreased. There was photo conductivity in the films. Studies on photoelectrochemical cells showed greater efficiency when compared. The flat band po(ential obtained from Mott-Schottky plots is 0.93V (SCE). The films have conductivity of thc p-typc. Jpn, a measure of photocurrent variation with wavelength, peaked at L9] eV, the band gap value. Ambient temperature Peaks at 85, l29, and I60 cm’1 are ' visible in the fi|ms‘ Raman spectra, which correspond to the chalcopyritc structure. At ambient temperature, a single broad peak was seen at the 820 nm photo luminescence spectrum.

No. of Pages : 19 No. of Claims : 4

(12) PATENT APPLICATION PUBLICATION
(21) Application No.202441036417 A
(19) INDIA
(22) Date of filing of Application :08/05/2024
(43) Publication Date : 14/11/2025

(54) Title of the invention : OCCUPATIONAL SAFETY ENHANCEMENT HELMET FOR COAL MINERS

(51) International classification	:G06Q0010060000, G16H0050300000, G06Q0040020000, E21F0017180000, G16H0010600000
(31) Priority Document No	:NA
(32) Priority Date	:NA
(33) Name of priority country	:NA
(86) International Application No	:NA
Filing Date	:NA
(87) International Publication No	: NA
(61) Patent of Addition to Application Number	:NA
Filing Date	:NA
(62) Divisional to Application Number	:NA
Filing Date	:NA

(71)**Name of Applicant :**
1)KEVIN PAUL. JA
Address of Applicant :SRI SHAKTHI INSTITUTE OF ENGINEERING & TECHNOLOGY, COIMBATORE-641062. Tamil Nadu India
(72)**Name of Inventor :**
1)RABIN R
2)BRINTHA L
3)DHARSHINI U

(57) Abstract :
The Coal Mine Occupational Safety and Health Management and Risk Control System was developed to achieve the aforementioned objectives, namely promoting the coal mine occupational safety and health management based on early warning and dynamic monitoring of risks. This paper examines the occupational safety and health management techniques as well as risk control technology associated with the coal mining industry, including daily management of occupational safety. In addition, an analysis is conducted on the software package's actual effectiveness and the related pattern when it comes to coal mining. According to the study, occupational safety and health management initiatives in coal mines may be supported in a standardized and efficient manner by already available risk control, occupational safety and health management, and related software. Additionally, it can efficiently and scientifically)' reduce the risk of accidents; when applied properly, it can also strengthen risk management strategies and the system for managing occupational safety and health in coal mines. Furthermore, its use shows that risk control and occupational safety and health management technology have been developed on the basis of a benign cycle including dynamic feedback and scientific advancement, which may offer a ‘trustworthy guarantee for the safe operation of coul mines. KEYWORDS IMAX30|02, Arduino UNO, Portable

No. of Pages : 9 No. of Claims : 4

(12) PATENT APPLICATION PUBLICATION
(21) Application No.202441036427 A
(19) INDIA
(22) Date of filing of Application :08/05/2024
(43) Publication Date : 14/11/2025

(54) Title of the invention : A BATTERY PACK

(51) International classification	:H01M10/653, H01M10/613, H01M10/6556, H01M50/213, H01M50/291	
(31) Priority Document No	:NA	
(32) Priority Date	:NA	
(33) Name of priority country	:NA	
(86) International Application No	:NA	
Filing Date	:NA	
(87) International Publication No	: NA	
(61) Patent of Addition to Application Number	:NA	
Filing Date	:NA	
(62) Divisional to Application Number	:NA	
Filing Date	:NA	

(71)**Name of Applicant :**
1)TVS Motor Company Limited
Address of Applicant :Jayalakshmi Estate, No 29 (Old No 8), Haddows Road Tamil Nadu India
2)TVS Motor Company Limited
(72)**Name of Inventor :**
1)GIDUTURI MOHINI
2)MULUGU SAI NANDA KISHORE
3)PRAMILA RAO NILESHWAR
4)DATTA RAJARAM SAGARE

(57) Abstract :
The present invention provides a battery pack (100) comprises of a casing (102), a plurality of cells (104), a first material (106) and a plurality of sheets (108). The first material (106) is disposed on at least one end of the plurality of cells (104). The first material (106) is configured to hold and support the plurality of cells (104). The battery pack (100) further comprises a first circuit (314a) and a second circuit (314b). The first circuit (314a) being configured to supply power to a plurality of low current devices, and second circuit (314) being configured to supply power to a plurality of high current devices. The battery pack further comprises a Printed Circuit Board (200), the printed circuit board (200) comprises of a plurality of tracks, the plurality of tracks being configured to disconnect the power supply to electrical components, thereby ensuring critical safety features. To be published with Figure 1

No. of Pages : 25 No. of Claims : 12

(12) PATENT APPLICATION PUBLICATION
(21) Application No.202441036428 A
(19) INDIA
(22) Date of filing of Application :08/05/2024
(43) Publication Date : 14/11/2025

(54) Title of the invention : A VEHICLE

(51) International classification	:H02S0020320000, H02J0007350000, F24S0025100000, H02S0010100000, F24S0050200000	(71)**Name of Applicant :** **1)TVS Motor Company Limited** Address of Applicant :Jayalakshmi Estate, No 29 (Old No 8), Haddows Road Tamil Nadu India **2)TVS Motor Company Limited**
(31) Priority Document No	:NA	(72)**Name of Inventor :**
(32) Priority Date	:NA	**1)MOUMITA SARKAR**
(33) Name of priority country	:NA	**2)DAVINDER KUMAR**
(86) International Application No	:NA	
Filing Date	:NA	
(87) International Publication No	: NA	
(61) Patent of Addition to Application Number	:NA	
Filing Date	:NA	
(62) Divisional to Application Number	:NA	
Filing Date	:NA	

(57) Abstract :
The present disclosure pertains to a vehicle (100), the vehicle (100) comprising one or more surfaces (202, 204, 206). The vehicle (100) further comprises a plurality of photovoltaic devices (104, 106, 108, 110) for absorption of radiant energy. The plurality of photovoltaic devices (104, 106, 108, 110) is disposed on the one or more surfaces (202, 204, 206), the disposition of the plurality of photovoltaic devices (104, 106, 108, 110) is based on a set of parameters. The plurality of photovoltaic devices ((104, 106, 108, 110) disposed on the vehicle (100) encompasses a variety of types. These types include, but are not limited to monocrystalline silicon solar cells, which offer high efficiency and durability due to their uniform crystal structure. To be published with Figure 1

No. of Pages : 18 No. of Claims : 12

(12) PATENT APPLICATION PUBLICATION
(21) Application No.202441036429 A
(19) INDIA
(22) Date of filing of Application :08/05/2024
(43) Publication Date : 14/11/2025

(54) Title of the invention : A COVER ASSEMBLY FOR A TRANSMISSION SYSTEM OF A VEHICLE

(51) International classification	:F16H57/00, F16H57/027, F16H57/031, F16H9/00	(71)**Name of Applicant :** **1)TVS Motor Company Limited** Address of Applicant :Jayalakshmi Estate, No 29 (Old No 8), Haddows Road Tamil Nadu India **2)TVS Motor Company Limited**
(31) Priority Document No	:NA	
(32) Priority Date	:NA	(72)**Name of Inventor :**
(33) Name of priority country	:NA	**1)VIJAYA BHASKAR ADIGA**
(86) International Application No	:NA	**2)MUTHURAJA ANNAMALAI**
Filing Date	:NA	**3)SULAIMAN THARIQ AHMAD**
(87) International Publication No	: NA	**4)MOHAN DEORAO UMATE**
(61) Patent of Addition to Application Number	:NA	**5)VETHANAYA GAM JAYAJOTHI JOHNSON**
Filing Date	:NA	
(62) Divisional to Application Number	:NA	
Filing Date	:NA	

(57) Abstract :
The present invention discloses a cover assembly (100) for a transmission system (150) of a saddle-type vehicle (175). The cover assembly (100) comprises at least on first cover portion (101) configured to cover at least a first region of the CVT system (150), and at least one second cover portion (102) coupled to the first cover portion (101). The second cover portion (102) is configured to cover at least a second region of the CVT system (150). The first cover portion (101) comprises one or more airflow guides (113). The cover assembly (100) further comprises an inner air guide member (103) configured with at least one of the first cover portion (101) and the second cover portion (102) and configured to guide air flow towards the second region of the CVT system (150) to improve air flow in the cover assembly (100). To be published with Fig. 5

No. of Pages : 29 No. of Claims : 12

(12) PATENT APPLICATION PUBLICATION
(21) Application No.202441036432 A
(19) INDIA
(22) Date of filing of Application :08/05/2024
(43) Publication Date : 14/11/2025

(54) Title of the invention : A COMMUNICATION SYSTEM IN A VEHICLE NETWORK AND METHOD THEREOF

(51) International classification	:A61B0005000000, H04W0004800000, G06Q0020320000, G06F0001160000, H04M0001600000	(71)**Name of Applicant :** **1)TVS Motor Company Limited** Address of Applicant :Jayalakshmi Estate, No 29 (Old No 8), Haddows Road Tamil Nadu India **2)TVS Motor Company Limited**
(31) Priority Document No	:NA	(72)**Name of Inventor :**
(32) Priority Date	:NA	**1)NAVEEN NATARAJAN KIRSHNAKU MAR**
(33) Name of priority country	:NA	**2)BALAJI SREENIVASAN**
(86) International Application No	:NA	
Filing Date	:NA	
(87) International Publication No	: NA	
(61) Patent of Addition to Application Number	:NA	
Filing Date	:NA	
(62) Divisional to Application Number	:NA	
Filing Date	:NA	

(57) Abstract :
The present invention provides communication system in a vehicle and method thereof. The system for communication in a vehicle network, comprising one or more peripheral device (102a, 104a, 106a) and one or more user devices (102b, 104b, 106b). The one or more user devices (102b, 104b, 106b) are configured to operate as a plurality of connected nodes and a leading node (102b) of the plurality of connecting nodes (102b, 104b, 106b) is designated as a master node (102b). The master node (102b) communicates one or more notifications with the plurality of connecting nodes (104b, 106b) in one or more operating modes in the created local network. To be published with Figure 2

No. of Pages : 35 No. of Claims : 10

(12) PATENT APPLICATION PUBLICATION
(21) Application No.202441036433 A
(19) INDIA
(22) Date of filing of Application :08/05/2024
(43) Publication Date : 14/11/2025

(54) Title of the invention : A COMMUNICATION SYSTEM IN A VEHICLE NETWORK AND METHOD THEREOF

(51) International classification	:A61B0005000000, G06F0001160000, H04W0004800000, G06Q0020320000, H04L0065400000
(31) Priority Document No	:NA
(32) Priority Date	:NA
(33) Name of priority country	:NA
(86) International Application No	:NA
Filing Date	:NA
(87) International Publication No	: NA
(61) Patent of Addition to Application Number	:NA
Filing Date	:NA
(62) Divisional to Application Number	:NA
Filing Date	:NA

(71)**Name of Applicant :**
1)TVS Motor Company Limited
Address of Applicant :Jayalakshmi Estate, No 29 (Old No 8), Haddows Road Tamil Nadu India
2)TVS Motor Company Limited
(72)**Name of Inventor :**
1)NAVEEN NATARAJAN KIRSHNAKUMAR
2)BALAJI SREENIVASAN

(57) Abstract :
The present invention provides communication system in a vehicle and method thereof. The system for communication in a vehicle network, comprising one or more peripheral device (102a, 102b, 102c) and one or more user devices (104a, 104b, 104c). The one or more user devices (104a, 104b, 104c) are configured to operate as a plurality of connected nodes and one or more leading node of the plurality of connecting nodes is designated as a master node. To be published with Figure 2

No. of Pages : 25 No. of Claims : 10

(12) PATENT APPLICATION PUBLICATION
(21) Application No.202441036436 A
(19) INDIA
(22) Date of filing of Application :08/05/2024
(43) Publication Date : 14/11/2025

(54) Title of the invention : A REAR FRAME ASSEMBLY FOR A VEHICLE

(51) International classification	:B62D0021020000, B62D0025200000, B62D0021110000, B62D0025080000, B32B0003260000	(71)**Name of Applicant :** **1)TVS Motor Company Limited** Address of Applicant :Jayalakshmi Estate, No 29 (Old No 8), Haddows Road Tamil Nadu India **2)TVS Motor Company Limited**
(31) Priority Document No	:NA	(72)**Name of Inventor :**
(32) Priority Date	:NA	**1)DHINESH KANNU VAIRAKKANNU**
(33) Name of priority country	:NA	**2)MANICKAM SUBASH**
(86) International Application No	:NA	**3)SIDDAPURA NAGARAJU PRASHANTH**
Filing Date	:NA	
(87) International Publication No	: NA	
(61) Patent of Addition to Application Number	:NA	
Filing Date	:NA	
(62) Divisional to Application Number	:NA	
Filing Date	:NA	

(57) Abstract :
Aspect of the present invention pertains a rear frame assembly (106) include a first member (108), a second member (110), and one or more connecting members (111a, 111b, 111c, 111d) is detachably connected to the first member (108) and the second member (110). In an aspect, the at least one of the first member (108) and the second member (110) is composed of a first material and the one or more connecting members (111a, 111b, 111c, 111d) is composed of a second material. To be published with Fig. 1

No. of Pages : 21 No. of Claims : 10

(12) PATENT APPLICATION PUBLICATION
(21) Application No.202441036576 A
(19) INDIA
(22) Date of filing of Application :08/05/2024
(43) Publication Date : 14/11/2025

(54) Title of the invention : EMPOWERING IOT DEVICES WITH INTUITIVE TOUCH AND PROXIMITY INTERACTION

(51) International classification	:G06F0003044000, G06F0003041000, G06F0003010000, H04W0004700000, G06F0003048830	(71)**Name of Applicant :** **1)Ashutosh Srivastava** Address of Applicant :132 Aecs Layout, Itpl Main Road, Kundalahalli Karnataka India **2)Dr Panchikattil Susheelkumar Sreedharan**
(31) Priority Document No	:NA	(72)**Name of Inventor :**
(32) Priority Date	:NA	**1)Ashutosh Srivastava**
(33) Name of priority country	:NA	**2)Dr Panchikattil Susheelkumar Sreedharan**
(86) International Application No	:NA	**3)Krishna Teja**
Filing Date	:NA	**4)Sachin Aralikatti**
(87) International Publication No	: NA	**5)Dr Deepa R**
(61) Patent of Addition to Application Number	:NA	
Filing Date	:NA	
(62) Divisional to Application Number	:NA	
Filing Date	:NA	

(57) Abstract :
The patent proposal titled "Empowering IoT Devices with Intuitive Touch and Proximity Interaction" introduces a pioneering approach to enhancing IoT device usability through intuitive touch and proximity interaction capabilities. This innovation integrates advanced touch sensing and proximity sensing technologies into IoT devices, revolutionizing user experiences and expanding functionality. The system detects touch gestures with high precision, enabling intuitive control and interaction without physical buttons or controls. Additionally, it utilizes proximity sensing to detect nearby objects or users, allowing for context-aware interactions and automatic activation. By seamlessly combining touch and proximity interaction, the proposed invention offers users a more natural and intuitive way to interact with IoT devices, improving accessibility and user engagement. This patent represents a significant advancement in IoT technology, empowering devices with enhanced usability and functionality through intuitive touch and proximity interaction capabilities.

No. of Pages : 10 No. of Claims : 3

(12) PATENT APPLICATION PUBLICATION
(21) Application No.202441036579 A
(19) INDIA
(22) Date of filing of Application :08/05/2024
(43) Publication Date : 14/11/2025

(54) Title of the invention : AN ELECTRICAL COMPONENT FOR A VEHICLE

(51) International classification	:H01L0023000000, H04W0016140000, F21V0019000000, G01S0015880000, H04N0019510000
(31) Priority Document No	:NA
(32) Priority Date	:NA
(33) Name of priority country	:NA
(86) International Application No	:NA
Filing Date	:NA
(87) International Publication No	: NA
(61) Patent of Addition to Application Number	:NA
Filing Date	:NA
(62) Divisional to Application Number	:NA
Filing Date	:NA

(71)**Name of Applicant :**
1)TVS Motor Company Limited
Address of Applicant :Jayalakshmi Estate, No 29 (Old No 8), Haddows Road Tamil Nadu India
2)TVS Motor Company Limited
(72)**Name of Inventor :**
1)CHARLESBENADICT SAVARIRAJA N
2)RAMASAMY VIJAYAVELUSAMY JANARTH
3)MANIKANDAN GUNASEKAR AN
4)DHODDANNAN
5)RAGHAVEND RA PRASAD
6)DATTA RAJARAM SAGARE

(57) Abstract :
The present invention provides a location for an electrical component (102) in a vehicle (100). The vehicle (100) comprises of a frame assembly (104) comprising a head tube (104a), a power unit (106) secured on the frame assembly (104) and an electrical component (102) disposed in a region formed below the head tube (104a), in front of the power unit (106) and above a thermal regulation unit (108) in the vehicle (100). The electrical component (102) further comprises an outer shell which secures the unit while maintaining signal transmission integrity. The present subject matter addresses spatial constraints and signal interference concerns. To be published with Figure 1

No. of Pages : 18 No. of Claims : 10

(12) PATENT APPLICATION PUBLICATION
(21) Application No.202441036583 A
(19) INDIA
(22) Date of filing of Application :09/05/2024
(43) Publication Date : 14/11/2025

(54) Title of the invention : AN AUTOMATED GAS TUNGSTEN ARC WELDING SYSTEM FOR FLEXIBLE HOSES

(51) International classification	:B23K0009167000, B23K0009100000, B23K0009095000, B33Y0030000000, B23K0009120000	
(31) Priority Document No	:NA	
(32) Priority Date	:NA	
(33) Name of priority country	:NA	
(86) International Application No	:NA	
Filing Date	:NA	
(87) International Publication No	: NA	
(61) Patent of Addition to Application Number	:NA	
Filing Date	:NA	
(62) Divisional to Application Number	:NA	
Filing Date	:NA	

(71)**Name of Applicant :**
1)T. V. Niranjan Kumar
Address of Applicant :No 410/6, 15th Cross, 2nd Block Jayanagar, Bangalore 560011, Karnataka, India Bengaluru Urban Karnataka India
2)T. N. Pradeep Kumar Naidu
3)Shravanthi Sashidhar
(72)**Name of Inventor :**
1)T. V. Niranjan Kumar
2)T. N. Pradeep Kumar Naidu
3)Shravanthi Sashidhar

(57) Abstract :
The present invention relates to an automated gas tungsten arc welding system for flexible hoses. The Mini Flexi Hose Welder is a breakthrough innovation for welding stainless steel flexible hoses, corrugated hoses, sleeves, and adaptors. Utilizing GTAW with wire feeding, it ensures precise welds on components ranging from 5mm to 65mm diameter. Automatic setting capabilities adjust height, diameter, and offsets, enhancing accuracy. Cloud monitoring enables real-time monitoring of welded components. Energy-efficient at 400W, its compact user-friendly design offers an out-of-the-box automated solution. Addressing limitations of traditional welding for flexible hoses, this system caters to industries requiring high-quality, efficient welding of these components. Its specialized features, including automatic settings, cloud monitoring, and energy efficiency, make it a versatile and reliable choice for welding flexible hoses.

No. of Pages : 35 No. of Claims : 10

(12) PATENT APPLICATION PUBLICATION
(21) Application No.202441036594 A
(19) INDIA
(22) Date of filing of Application :08/05/2024
(43) Publication Date : 14/11/2025

(54) Title of the invention : A PROCESS OF COMBO NANOFORMULATION FOR THE DELIVERY OF COMBO DRUGS (DECURSIN AND ENZALUTAMIDE) ELASTIN NANOGELS FOR PROSTATE CANCER THERAPY AND PRODUCT THEREOF

(51) International classification	:A61K0031370000, A61K0009160000, A61K0009510000, A61P0035000000, A61K0031416600
(31) Priority Document No	:NA
(32) Priority Date	:NA
(33) Name of priority country	:NA
(86) International Application No	:NA
Filing Date	:NA
(87) International Publication No	: NA
(61) Patent of Addition to Application Number	:NA
Filing Date	:NA
(62) Divisional to Application Number	:NA
Filing Date	:NA

(71)**Name of Applicant :**
1)SRI RAMACHANDRA INSTITUTE OF HIGHER EDUCATION AND RESEARCH
Address of Applicant :SRI RAMACHANDRA INSTITUTE OF HIGHER EDUCATION AND RESEARCH NO.1, RAMACHANDRA NAGAR, PORUR CHENNAI CHENNAI TAMIL NADU INDIA 600116 Chennai Tamil Nadu India
(72)**Name of Inventor :**
1)VINOTH KUMAR LAKSHMANAN
2)GULZAR AHMED RATHER
3)SATISH SRINIVAS KONDAVEETI
4)KUMARESAN NATARAJAN

(57) Abstract :
TITLE: A PROCESS OF COMBO NANOFORMULATION FOR THE DELIVERY OF COMBO DRUGS (DECURSIN AND ENZALUTAMIDE) ELASTIN NANOGELS FOR PROSTATE CANCER THERAPY AND PRODUCT THEREOF APPLICANT: SRI RAMACHANDRA INSTITUTE OF HIGHER EDUCATION AND RESEARCH ABSTRACT The present invention discloses a process of preparation of decursin and enzalutamide drug incorporated elastin nanogel for prostate cancer therapy, comprises of following steps; a. preparation of oil phase comprises of dissolving enzalutamide and elastin nanogel in Dichloromethane (DCM)/Dimethyl sulfoxide (DMSO) to form oil phase; b. adding decursin drug into the oil phase to form a mixture; c. subjecting the mixture to homogenization to form W1/O emulsion; d. incorporating the W1/O emulsion into polyvinyl alcohol (PVA) solution followed by homogenization to form W1/O/W2 emulsion; e. stirring the W1/O/W2 emulsion at room temperature for 5 hours followed by centrifugation to obtain pellet of decursin and enzalutamide drug incorporated elastin nanogel followed by purification with a dialysis membrane and storing in an air tight container. The present invention also discloses a decursin and enzalutamide drug incorporated elastin nanogel for prostate cancer therapy prepared by the process as described above.

No. of Pages : 25 No. of Claims : 4

(12) PATENT APPLICATION PUBLICATION
(21) Application No.202441036652 A
(19) INDIA
(22) Date of filing of Application :09/05/2024
(43) Publication Date : 14/11/2025

(54) Title of the invention : SCLERAL FIXATED INTRAOCULAR LENS

(51) International classification :A61F2/16
(31) Priority Document No :NA
(32) Priority Date :NA
(33) Name of priority country :NA
(86) International Application No :NA
Filing Date :NA
(87) International Publication No : NA
(61) Patent of Addition to Application Number :NA
Filing Date :NA
(62) Divisional to Application Number :NA
Filing Date :NA

(71)**Name of Applicant :**
1)Sri Kanchi Kamakoti Medical Trust
Address of Applicant :No 16A Sathy Road, Shivanandapuram, Coimbatore Tamil Nadu India 641035 Coimbatore Tamil Nadu India
(72)**Name of Inventor :**
1)Jagadeesh Kumar Reddy

(57) Abstract :
The embodiments herein provide a scleral fixated intraocular lens (IOL) (100) designed for sutureless implantation in an eye. The scleral fixated intraocular lens (100) includes an optic (102) devised for vision correction and at least one haptic (104) integrated with the optic, is equipped with at least one stem (106) adapted for insertion through sclerotomies and 5 subsequent positioning under scleral flaps for securing the scleral fixated IOL (100) accurately positioned in the eye. The haptic (104) is angled to mitigate friction against ocular tissues, thereby averting a risk of inflammation in the eye. A scleral fixated intraocular lens (IOL) system further includes the scleral fixated IOL (100) and a cartridge for implanting 10 the scleral fixated IOL (100) into the eye through an incision. The implantation of the scleral fixated IOL (100) into the eye is through an incision of less than 3mm size.

No. of Pages : 14 No. of Claims : 7

(12) PATENT APPLICATION PUBLICATION
(21) Application No.202441036659 A
(19) INDIA
(22) Date of filing of Application :09/05/2024
(43) Publication Date : 14/11/2025

(54) Title of the invention : A VIRTUAL REALITY BASED DEVICES CONTROL SYSTEM

(51) International classification	:H04L0012280000, G06F0003010000, G05B0015020000, G16H0020300000, G06T0019000000
(31) Priority Document No	:NA
(32) Priority Date	:NA
(33) Name of priority country	:NA
(86) International Application No	:NA
Filing Date	:NA
(87) International Publication No	: NA
(61) Patent of Addition to Application Number	:NA
Filing Date	:NA
(62) Divisional to Application Number	:NA
Filing Date	:NA

(71)**Name of Applicant :**
1)K.RAMAKRISHNAN COLLEGE OF ENGINEERING
Address of Applicant :The Principal, K.Ramakrishnan College of Engineering, NH-45, Samayapuram, Trichy, Tamil Nadu, India- 621112 Tamil Nadu India
(72)**Name of Inventor :**
1)Mr. KASTHURIRENGAN P
2)Mr. R. SasiKumar
3)Mr. I. Infantraj
4)DHANVANTHARI DEVI R
5)HARINI T
6)JYOTHSANA M

(57) Abstract :
ABSTRACT A VIRTUAL REALITY BASED DEVICES CONTROL SYSTEM The present invention discloses a virtual reality based device control system for controlling the operations of the one or more devices virtually based on the need of the user. The device control system comprises a power source and a plurality of IoT control devices. The plurality of IoT control devices can be installed at the plurality of devices. The smart phone comprises a camera which is configured to recognize the target images for controlling its operations by means of user control. The user interface module is operable by the mobile application which is configured to select the plurality of devices from the mobile control for controlling its operation by means of user control; The VR controller is operatively coupled with the mobile which is configured to execute the virtual switch features for selecting it virtually to control the operations of the one or more devices. The response confirmation module is providing the executed information to the user through the user handheld devices. The real-time feedback module is configured to eliminate the errors and to improve the rectifications for virtually controlling the devices using the user handheld devices from one or more locations. The present invention will reduce the manual efforts for controlling the operations of the one or more devices in an effective manner. Fig 1

No. of Pages : 19 No. of Claims : 5

(12) PATENT APPLICATION PUBLICATION
(19) INDIA
(22) Date of filing of Application :09/05/2024
(21) Application No.202441036744 A
(43) Publication Date : 14/11/2025

(54) Title of the invention : "CONFIGURING AND PERFORMING MOBILITY AND CONDITIONAL MOBILITY"

(51) International classification	:H04W0076270000, H04W0074080000, G06Q0050180000, H04W0036000000, A61B0005369000
(31) Priority Document No	:NA
(32) Priority Date	:NA
(33) Name of priority country	:NA
(86) International Application No	:NA
Filing Date	:NA
(87) International Publication No	: NA
(61) Patent of Addition to Application Number	:NA
Filing Date	:NA
(62) Divisional to Application Number	:NA
Filing Date	:NA

(71)**Name of Applicant :**
1)Samsung Electronics Co., Ltd
Address of Applicant :129, Samsung-ro, Yeongtong-gu, Suwon- si,Gyeonggi-do 443-742, Republic of Korea Republic of Korea
(72)**Name of Inventor :**
1)Aby Kanneath Abraham

(57) Abstract :
ABSTRACT "CONFIGURING AND PERFORMING MOBILITY AND CONDITIONAL MOBILITY" The present invention discloses a method and User Equipment (UE) (103) for managing mobility in a telecommunication network. The method includes the UE detecting a radio link failure in either a Master Cell Group (MCG) or a Secondary Cell Group (SCG). Upon detection of such a failure, the UE initiates the transmission of failure information-either MCG failure information or SCG failure information—to a network apparatus. Concurrently, the method includes stopping the evaluation of Conditional Link Termination Management (CLTM) for the MCG when the transmission of MCG failure information is initiated, and stopping the evaluation of CLTM for the SCG when the transmission of SCG failure information is initiated. This invention enhances the robustness and reliability of mobility management in telecommunication networks by ensuring timely and appropriate responses to radio link failures. FIG. 3

No. of Pages : 43 No. of Claims : 12

(12) PATENT APPLICATION PUBLICATION
(21) Application No.202441036797 A
(19) INDIA
(22) Date of filing of Application :09/05/2024
(43) Publication Date : 14/11/2025

(54) Title of the invention : LOW DROP-OUT REGULATOR WITH ACTIVE DISCHARGE CIRCUIT

(51) International classification	:G05F0001575000, H01L0027115700, H01L0029080000, H01L0029060000, G11C0007100000
(31) Priority Document No	:NA
(32) Priority Date	:NA
(33) Name of priority country	:NA
(86) International Application No	:NA
Filing Date	:NA
(87) International Publication No	: NA
(61) Patent of Addition to Application Number	:NA
Filing Date	:NA
(62) Divisional to Application Number	:NA
Filing Date	:NA

(71)**Name of Applicant :**
1)Samsung Electronics Co., Ltd.
Address of Applicant :129, Samsung-ro, Yeongtong-gu, Suwon-si, Gyeonggi-do, 16677, Republic of Korea Suwon-si Republic of Korea
(72)**Name of Inventor :**
1)SIDDAMURTHY, Subba Reddy
2)TADINADA, Aswani Aditya Kumar
3)ISSA, Venkatsuryam Setty

(57) Abstract :
An LDO regulator circuit includes an Active Capacitor Frequency Compensation (ACFC) circuit and an output circuit. The ACFC circuit includes a current amplifier. The output circuit includes a pass transistor, an output node and an active discharge circuit connected to the output node. The current amplifier includes a source degeneration resistor-capacitor (RC) configured to control a gain of the current amplifier. The ACFC circuit is configured to control a voltage across a gate source junction of the pass transistor. The active discharge circuit is configured to drain a current from the output node based on a voltage across the gate source junction of the pass transistor and a load current at the output node.

No. of Pages : 27 No. of Claims : 19

(12) PATENT APPLICATION PUBLICATION
(21) Application No.202441036813 A
(19) INDIA
(22) Date of filing of Application :09/05/2024
(43) Publication Date : 14/11/2025

(54) Title of the invention : A CLOUD-AI-BASED REMOTELY CONTROLLING UNMANNED AERIAL VEHICLES (UAVS) SYSTEM FOR OBJECT/ INCIDENT DETECTION

(51) International classification	:B64C0039020000, G08G0005000000, G05D0001000000, G05D0001100000, H04L0067100000	(71)**Name of Applicant :** **1)NMICPS Technology Innovation Hub On Autonomous Navigation Foundation** Address of Applicant :C/o Indian Institute of Technology Hyderabad, Kandi, Sangareddy, Telangana Kandi Telangana India
(31) Priority Document No	:NA	**2)Indian Institute Of Technology Hyderabad**
(32) Priority Date	:NA	(72)**Name of Inventor :**
(33) Name of priority country	:NA	**1)PROF. RAJALAKSHMI PACHAMUTHU**
(86) International Application No	:NA	**2)MR. PRASANTH KUMAR DUBA**
Filing Date	:NA	
(87) International Publication No	: NA	
(61) Patent of Addition to Application Number	:NA	
Filing Date	:NA	
(62) Divisional to Application Number	:NA	
Filing Date	:NA	

(57) Abstract :
ABSTRACT A CLOUD-AI-BASED REMOTELY CONTROLLING UNMANNED AERIAL VEHICLES (UAVs) SYSTEM FOR OBJECT/ INCIDENT DETECTION The present invention relates to a cloud-based system and method for remote piloting of drones involves using a cloud infrastructure to control drones from a remote location. The invention provides cloud AI based waypoint navigation for UAVs that leverages the power of cloud computing to enhance navigation capabilities. It utilizes cloud resources to calculate optimal flight paths based on waypoints in real-time, considering factors like obstacles, weather, and mission objectives. The visual data (images or video feeds) captured by the UAV's onboard cameras are transmitted to the cloud in real-time or periodically for processing. The methods within the cloud infrastructure identify and isolate human subjects within the imagery or video streams and upon identification, the system might trigger predefined actions, such as sending alerts or notifications to operators. Published with Figure 3

No. of Pages : 19 No. of Claims : 6

(12) PATENT APPLICATION PUBLICATION
(21) Application No.202441036814 A
(19) INDIA
(22) Date of filing of Application :09/05/2024
(43) Publication Date : 14/11/2025

(54) Title of the invention : AN AUTOMATED PARKING BRAKE ENABLE DRIVE BY WIRE FOR AUTONOMOUS VEHICLE FOR HILLY TERRAIN

(51) International classification	:G05D0001000000, G05D0001020000, B60T0013740000, B60T0007120000, B60W0030060000
(31) Priority Document No	:NA
(32) Priority Date	:NA
(33) Name of priority country	:NA
(86) International Application No	:NA
Filing Date	:NA
(87) International Publication No	: NA
(61) Patent of Addition to Application Number	:NA
Filing Date	:NA
(62) Divisional to Application Number	:NA
Filing Date	:NA

(71)**Name of Applicant :**
1)NMICPS Technology Innovation Hub On Autonomous Navigation Foundation
Address of Applicant :C/o Indian Institute of Technology Hyderabad, Kandi, Sangareddy, Telangana– 502284 Kandi Telangana India
2)Indian Institute Of Technology Hyderabad
(72)**Name of Inventor :**
1)DR. SWAPNIL DIPAK SHINDE
2)PROF. RAJALAKSHMI PACHAMUTHU

(57) Abstract :
ABSTRACT AN AUTOMATED PARKING BRAKE ENABLE DRIVE BY WIRE FOR AUTONOMOUS VEHICLE FOR HILLY TERRAIN The present invention relates to an automated parking brake enable drive by wire for autonomous vehicle for hilly terrain. The invention provides precise and adaptive brake control making them safer, more efficient, and versatile for a wide range of applications. The integration of automated parking brake systems in drive-by-wire technologies for autonomous vehicles operating on sloping terrains presents a pivotal advancement in vehicle control and safety. This automated parking brake systems is incorporated within drive-by-wire frameworks, emphasizing their significance in ensuring safe navigation and stability on inclined surfaces. Published with Figure 1

No. of Pages : 27 No. of Claims : 4

(12) PATENT APPLICATION PUBLICATION
(21) Application No.202441036827 A
(19) INDIA
(22) Date of filing of Application :09/05/2024
(43) Publication Date : 14/11/2025

(54) Title of the invention : "LEVERAGING STORE AND FORWARD INFORMATION IN COMMUNICATION SYSTEM"

(51) International classification	:G08B0025080000, H04L0009080000, H04M0001663000, G16H0010600000, H04L0065107300
(31) Priority Document No	:NA
(32) Priority Date	:NA
(33) Name of priority country	:NA
(86) International Application No	:NA
Filing Date	:NA
(87) International Publication No	: NA
(61) Patent of Addition to Application Number	:NA
Filing Date	:NA
(62) Divisional to Application Number	:NA
Filing Date	:NA

(71)**Name of Applicant :**
1)Samsung Electronics Co., Ltd
Address of Applicant :129, Samsung-ro, Yeongtong-gu, Suwon- si,Gyeonggi-do 443-742, Republic of Korea Republic of Korea
(72)**Name of Inventor :**
1)Basavaraj Jayawant Pattan
2)Sapan Pramodkumar Shah
3)Lalith Kumar
4)Varini Gupta

(57) Abstract :
ABSTRACT "LEVERAGING STORE AND FORWARD INFORMATION IN COMMUNICATION SYSTEM" Embodiments of the present invention provide a method and apparatus for leveraging store and forward (S&F) information within a communication system. The method involves a first network apparatus (100) receiving an S&F information request message from a second network apparatus (200), which seeks to obtain S&F information for application enablement. The first network apparatus (100) then authenticates and authorizes the second network apparatus (200) requesting the S&F information. Upon successful authentication and authorization, the first network apparatus (100) generates an S&F information response message by incorporating the requested S&F information and transmits this response message back to the second network apparatus (200). The present invention ensures secure and efficient transfer of S&F information, facilitating enhanced application enablement within the communication system. FIG. 7

No. of Pages : 38 No. of Claims : 15

(12) PATENT APPLICATION PUBLICATION
(21) Application No.202441036861 A
(19) INDIA
(22) Date of filing of Application :09/05/2024
(43) Publication Date : 14/11/2025

(54) Title of the invention : CLIENT, SERVER AND METHOD FOR HANDLING MESSAG SERVICE IN WIRELESS NETWORK

(51) International classification	:H04B0007185000, H04L0051046000, H04L0051000000, H04M0003533000, H04L0051224000
(31) Priority Document No	:NA
(32) Priority Date	:NA
(33) Name of priority country	:NA
(86) International Application No	:NA
Filing Date	:NA
(87) International Publication No	: NA
(61) Patent of Addition to Application Number	:NA
Filing Date	:NA
(62) Divisional to Application Number	:NA
Filing Date	:NA

(71)**Name of Applicant :**
1)SAMSUNG ELECTRONICS CO., LTD.
Address of Applicant :129, Samsung-ro, Yeongtong-gu, Suwon-si, Gyeonggi-do 443-742, Republic of Korea Republic of Korea
(72)**Name of Inventor :**
1)Sapan Pramodkumar Shah
2)Basavaraj Jayawant Pattan

(57) Abstract :
ABSTRACT CLIENT, SERVER AND METHOD FOR HANDLING MESSAG SERVICE IN WIRELESS NETWORK Embodiments herein disclose messaging-communication capability in 5GS. The method supports to store and forward of messages based on a sender UE (100a) request and an availability and reachability of a recipient UE (100b). The method supports a mechanism to update the store and forward parameter per message by a message initiator if a client (110) wants to ensure the delivery of the message to the recipient UE (100b). The client (110) further informs the server (200) to discard the stored message as the user or the client is no more interested to deliver the stored message to the recipient UE (100b). The proposed method is used to manage the stored messages at the server (200) to enable the client (110) to update or discard the stored messages. FIG. 4

No. of Pages : 38 No. of Claims : 10

(12) PATENT APPLICATION PUBLICATION
(19) INDIA
(22) Date of filing of Application :10/05/2024
(21) Application No.202441036904 A
(43) Publication Date : 14/11/2025

(54) Title of the invention : WE CLAIM ON WASTE WATER TREATMENT USING ICE APPLESHELL AS ACTIVATED CARBON

(51) International classification	:C02F0001280000, C02F0001000000, C02F0001780000, C02F0001440000, C02F0003120000
(31) Priority Document No	:NA
(32) Priority Date	:NA
(33) Name of priority country	:NA
(86) International Application No	:NA
Filing Date	:NA
(87) International Publication No	: NA
(61) Patent of Addition to Application Number	:NA
Filing Date	:NA
(62) Divisional to Application Number	:NA
Filing Date	:NA

(71)**Name of Applicant :**
1)Vasundhara Arul Murugesan
Address of Applicant :341, Andankovil Pudur Colony, Andankovil East, Andankovil Post, Manmangalam Taluk Tamil Nadu India
2)Dr. G. Vijayakumar
3)Ms.P. Bhargavi
4)Ms. Megha Nair
5)Ms.M. Sowmiya
6)Mr. A. Sivakumar
7)Ms. E. Vasunthara
8)Mr. M. Dineshkumar
9)Mr. V. Gnanaprakash
10)Ms. A. Harini
(72)**Name of Inventor :**
1)Vasundhara Arul Murugesan
2)Dr. G. Vijayakumar
3)Ms.P. Bhargavi
4)Ms. Megha Nair
5)Ms.M. Sowmiya
6)Mr. A. Sivakumar
7)Ms. E. Vasunthara
8)Mr. M. Dineshkumar
9)Mr. V. Gnanaprakash
10)Ms. A. Harini

(57) Abstract :
In a world of rapid urbanization and industrialization, effective waste management stands as a critical challenge. This project delves into the design and implementation of a Waste Treatment Plant aimed at addressing the growing concerns about surrounding domestic and industrial waste discharge. By exploring innovative technologies and sustainable practices, this project endeavors to contribute to a cleaner environment, reduced ecological impact, and the promotion of a circular economy. There are several methods for the treatment of wastewater. The use of low-cost adsorbents is effective in wastewater treatment. One such technique available for treating wastewater to remove contaminants like halogenated hydrocarbon compounds, heavy metals, dyes, pigments from wastewater. It suggest about treatment of secondary treated water with activated carbon adsorption technique by using activated carbon filter prepared with ice apple shell. Also taken comparison and analysis of the purification with the existing filter, thereby interpreting the viability of the model. This activated carbon powder can be used as an alternate filter media against coal which is more cost effective compared to coal. Treated water is completely safe for irrigational water under the TNPCB 2020 guidelines. It is also one of the sustainable way of waste management of agriculture wastes generated in the fields.

No. of Pages : 13 No. of Claims : 1

(12) PATENT APPLICATION PUBLICATION
(21) Application No.202441036911 A
(19) INDIA
(22) Date of filing of Application :10/05/2024
(43) Publication Date : 14/11/2025

(54) Title of the invention : A RESTING NUMBER

(51) International classification	:H01L0033620000, H01L0033480000, H04L0041080600, H01R0013658700, B41J0002320000
(31) Priority Document No	:NA
(32) Priority Date	:NA
(33) Name of priority country	:NA
(86) International Application No	:NA
Filing Date	:NA
(87) International Publication No	: NA
(61) Patent of Addition to Application Number	:NA
Filing Date	:NA
(62) Divisional to Application Number	:NA
Filing Date	:NA

(71)**Name of Applicant :**
1)TVS Motor Company Limited
Address of Applicant :Jayalakshmi Estate, No 29 (Old No 8), Haddows Road Tamil Nadu India
2)TVS Motor Company Limited
(72)**Name of Inventor :**
1)ARUNMOZHI PERIYASAMY
2)RAKESH PREMCHAND
3)CHINNIWAKKAM RAKESH ASWINKUMAR
4)SORNAPPAN BANU SHARMANATH
5)PERAMAIYAN SELVARAJU
6)BASKARRAO BEEMARAO
7)KUNCHITHAPATHAM SRIRAM

(57) Abstract :
The present invention pertains to a resting member (122). The resting member (122) have a first member (203) and one or second more member (124) attached to the first member (203). In an aspect, the one or more second member (124) has at least one portion (124a, 124b, 124c, 124d), and the at least one portion (124a, 124b, 124c, 124d) is configured to removably engage with a support member (208) of a frame assembly (200). To be published with Fig. 4

No. of Pages : 22 No. of Claims : 6

(12) PATENT APPLICATION PUBLICATION
(21) Application No.202441036912 A
(19) INDIA
(22) Date of filing of Application :10/05/2024
(43) Publication Date : 14/11/2025

(54) Title of the invention : A SWING ARM FOR A VEHICLE

(51) International classification	:A61P0009100000, F16F0015129000, A61B0017290000, F21K0009200000, F21V0021140000	(71)**Name of Applicant :** **1)TVS Motor Company Limited** Address of Applicant :Jayalakshmi Estate, No 29 (Old No 8), Haddows Road Tamil Nadu India **2)TVS Motor Company Limited**
(31) Priority Document No	:NA	(72)**Name of Inventor :**
(32) Priority Date	:NA	**1)AKARSHIT YADAV**
(33) Name of priority country	:NA	**2)RAJASEKHAR MADUGUDO**
(86) International Application No	:NA	**3)ENTHILNATHAN SUBBIAH**
Filing Date	:NA	**4)SIVANESASELVAM THANGARAJAN**
(87) International Publication No	: NA	**5)CHINNIWAKKAM RAMESH**
(61) Patent of Addition to Application Number	:NA	**6)ASHWINKUMAR**
Filing Date	:NA	**7)MANICKAN SUBASH**
(62) Divisional to Application Number	:NA	**8)LAVANYA VENKATESH**
Filing Date	:NA	

(57) Abstract :
The present invention pertains to a swing arm (100) for a vehicle. The swing arm comprises one or more members (102, 104, 106) include a first member (102), a second member (104) and a third member (106), in an aspect, the second member (104) is connected to each of the first member (102) and the third member (106), each of the first member (102) and the second member (104) is of a first material and the second member (104) is of a second material. To be published with Fig. 1

No. of Pages : 16 No. of Claims : 8

(12) PATENT APPLICATION PUBLICATION
(21) Application No.202441036914 A
(19) INDIA
(22) Date of filing of Application :10/05/2024
(43) Publication Date : 14/11/2025

(54) Title of the invention : A BRAKE ASSEMBLY FOR A VEHICLE

(51) International classification	:B60T0007100000, B62L0003020000, B62K0023060000, F16D0065180000, F16D0125640000	(71)**Name of Applicant :** **1)TVS Motor Company Limited** Address of Applicant :Jayalakshmi Estate, No 29 (Old No 8), Haddows Road Tamil Nadu India **2)TVS Motor Company Limited**
(31) Priority Document No	:NA	(72)**Name of Inventor :**
(32) Priority Date	:NA	**1)RAKESH PREMCHAND**
(33) Name of priority country	:NA	**2)SAKTHI VIGNESH DHAYALAN**
(86) International Application No	:NA	**3)SIDDAPURA NAGARAJU PRASHANTH**
Filing Date	:NA	**4)SIDDAPURA NAGARAJU PRASHANTH**
(87) International Publication No	: NA	
(61) Patent of Addition to Application Number	:NA	
Filing Date	:NA	
(62) Divisional to Application Number	:NA	
Filing Date	:NA	

(57) Abstract :
Aspect of the present invention pertains to a brake assembly (110) for a vehicle (100). The brake assembly (110) include a primary member (202), a secondary member (210) is detachably connected to the primary member (202) via a plurality of connecting members (302, 304). In an aspect, the primary member (202) include at least one first cavity (202a) and the secondary member (210) comprises at least a second cavity (210a). In an aspect, the at least first cavity (202a) is configured to overlap the at least second cavity (210a) to form an overlapped portion (402a). In an aspect, the overlapped portion (402a) is adapted to receive at least one of the plurality of connecting members (302, 304). To be published with Fig. 4B

No. of Pages : 19 No. of Claims : 10

(12) PATENT APPLICATION PUBLICATION
(21) Application No.202441036916 A
(19) INDIA
(22) Date of filing of Application :10/05/2024
(43) Publication Date : 14/11/2025

(54) Title of the invention : A HANDLEBAR ASSEMBLY FOR A VEHICLE

(51) International classification	:B62D1/16, B62K21/12, B62K 11/00	
(31) Priority Document No	:NA	
(32) Priority Date	:NA	
(33) Name of priority country	:NA	
(86) International Application No	:NA	
Filing Date	:NA	
(87) International Publication No	: NA	
(61) Patent of Addition to Application Number	:NA	
Filing Date	:NA	
(62) Divisional to Application Number	:NA	
Filing Date	:NA	

(71)**Name of Applicant :**
1)TVS Motor Company Limited
Address of Applicant :Jayalakshmi Estate, No 29 (Old No 8), Haddows Road Tamil Nadu India
2)TVS Motor Company Limited
(72)**Name of Inventor :**
1)RAKESH PREMCHAND
2)SAKTHI VIGNESH DHAYALAN
3)SORNAPPAN BANU SHARMANAT H
4)SIDDAPURA NAGARAJU PRASHANTH
5)LAKSHMI NARASIMHAN ANANTHAMURTHY
6)HARI GANESH SAKINALA
7)B VAMSI KRISHNA

(57) Abstract :
Aspect of the present invention pertains a holding member (110) for a handlebar assembly (102). The holding member (110) comprising: a plurality of first portions (506, 508), a plurality of second portions (502, 504), the plurality of second portions (502, 506) extending upwardly from the plurality of first portions (506, 508); and at least one third portion (512), the at least one third portion (512) is adapted to bridge each of the plurality of first portions (506, 508) or each of the plurality of second portions (502, 504). The present subject matter reduces the NVH issues while keeping the ergonomic position of a display unit 114. Further, the holding member 110 eliminates the plurality of child parts required to mount the display unit 114 to the handlebar assembly 102. To be published with Fig. 5

No. of Pages : 19 No. of Claims : 10

(12) PATENT APPLICATION PUBLICATION
(21) Application No.202441036920 A
(19) INDIA
(22) Date of filing of Application :10/05/2024
(43) Publication Date : 14/11/2025

(54) Title of the invention : METHOD FOR OPERATING A HOST VEHICLE IN A DOWNHILL DRIVE SCENARIO, ADAPTIVE CRUISE CONTROL DEVICE, VEHICLE AND COMPUTER PROGRAM

(51) International classification	:B60W0030140000, B60W0050000000, B60W0010180000, B60W0030160000, B60W0050140000	(71)**Name of Applicant :** **1)ZF CV Systems Global GmbH** Address of Applicant :Giacomettistr. 1, 3006 Bern, Switzerland Switzerland (72)**Name of Inventor :** **1)MUTHUKUMARAN, ArunKumar**
(31) Priority Document No	:NA	
(32) Priority Date	:NA	
(33) Name of priority country	:NA	
(86) International Application No	:NA	
Filing Date	:NA	
(87) International Publication No	: NA	
(61) Patent of Addition to Application Number	:NA	
Filing Date	:NA	
(62) Divisional to Application Number	:NA	
Filing Date	:NA	

(57) Abstract :
METHOD FOR OPERATING A HOST VEHICLE IN A DOWNHILL DRIVE SCENARIO, ADAPTIVE CRUISE CONTROL DEVICE, VEHICLE AND COMPUTER PROGRAM ABSTRACT The invention is directed to a method for operating a host vehicle (150) in a downhill drive scenario, and includes determining, based on slope data (SD) indicative of a cur-rent downhill slope, an acceleration time (TA) required to increase the speed value (VH) of the host vehicle (150) from a minimum speed (Vmin) to a maximum speed (Vmax) under gravity, and determining (110), based on the acceleration time (TA) and a desired brake duty cycle (DC), a deceleration time (TD) required to decrease the speed value (VH) of the host vehicle (150) from the maximum speed (Vmax) to the minimum speed (Vmin) while fulfilling the desired brake duty cycle (DC). A braking process (B) of the host vehicle (150) is controlled based on the determined deceleration time (TD) and the downhill speed range (?VD). FIG. 2

No. of Pages : 32 No. of Claims : 14

(12) PATENT APPLICATION PUBLICATION
(21) Application No.202441036942 A
(19) INDIA
(22) Date of filing of Application :10/05/2024
(43) Publication Date : 14/11/2025

(54) Title of the invention : METHOD FOR OPERATING A BRAKING SYSTEM, BRAKING CONTROL UNIT, VEHICLE AND VEHICLE COMBINATION

(51) International classification	:B60T0008170000, B60T0007200000, B60T0017220000, B60T0007040000, B60T0013680000
(31) Priority Document No	:NA
(32) Priority Date	:NA
(33) Name of priority country	:NA
(86) International Application No	:NA
Filing Date	:NA
(87) International Publication No	: NA
(61) Patent of Addition to Application Number	:NA
Filing Date	:NA
(62) Divisional to Application Number	:NA
Filing Date	:NA

(71)**Name of Applicant :**
1)ZF CV Systems Global GmbH
Address of Applicant :Giacomettistrasse 1, 3006 Bern, Switzerland Switzerland
(72)**Name of Inventor :**
1)LAKSHMANAN ASOKADAS, Rakesh

(57) Abstract :
METHOD FOR OPERATING A BRAKING SYSTEM, BRAKING CONTROL UNIT, VEHICLE AND VEHICLE COMBINATION The invention relates to a method (100) for operating a braking system (11) of a vehicle (10) configured to be connected to a trailer (30), wherein the braking system (11) comprises a braking control unit (13) and wherein the vehicle (10) comprises a rear sensor system (20) for monitoring a rear area (14) of the vehicle (10), the method (100) comprising: ? detecting (110), by means of the rear sensor system (20) of the vehicle (10), a presence (12) of a trailer (30) in the rear area (14) of the vehicle (10), ? signaling (120) the detected presence (12) of the trailer (30) to the braking control unit (13), and ? operating (130) the braking system (11) according to a predefined braking configuration (15) depending on the signaled presence (12) of the trailer (30). Furthermore, the invention relates to a braking control unit (13) configured to control a braking system (11) of a vehicle (10) configured to be connected to a trailer (30), to a vehicle (10) comprising a braking system (11) with such a braking control unit (13) and to a vehicle combination (50) comprising such a vehicle (10) and a trailer (30). Fig. 1

No. of Pages : 23 No. of Claims : 14

(12) PATENT APPLICATION PUBLICATION
(21) Application No.202441036969 A
(19) INDIA
(22) Date of filing of Application :10/05/2024
(43) Publication Date : 14/11/2025

(54) Title of the invention : SYSTEM AND METHOD FOR COMPREHENSIVE TESTING OF RWR/ESM/ELINT SYSTEMS

(51) International classification	:G01S0007020000, B64C0039020000, G06Q0050300000, G01S0007400000, H04B0017000000	(71)**Name of Applicant :** **1)Dipika Badri** Address of Applicant :50, ULSTER ST., TORONTO, ON M5S 1E3, CANADA Canada **2)Suresh Babu Suram**
(31) Priority Document No	:NA	(72)**Name of Inventor :**
(32) Priority Date	:NA	**1)Dipika Badri**
(33) Name of priority country	:NA	**2)Suresh Babu Suram**
(86) International Application No	:NA	
Filing Date	:NA	
(87) International Publication No	: NA	
(61) Patent of Addition to Application Number	:NA	
Filing Date	:NA	
(62) Divisional to Application Number	:NA	
Filing Date	:NA	

(57) Abstract :
Title:“SYSTEM AND METHOD FOR COMPREHENSIVE TESTING OF RWR/ESM/ELINT SYSTEMS” The present disclosure relates to a system and method for comprehensive testing of radar warning receivers (RWR), electronic support measures (ESM)/electronic intelligence (ELINT) systems which is the system under test (SUT). The present disclosure relates to a system comprises a drone-based test setup with an on-board test transmitter and a gimbal mounted antenna. The system further comprises a command & control and data acquisition & validation server (CCDAVS). The method comprises an application, software, firmware for test planning and executing such as controlling the SUT and drone-based test setup for path planning and emulating the desired radar parameters. The method further comprises comprehensive testing of the SUT using the system parameters such as direction of arrival (DOA) measurement over its complete field of view in azimuth and elevation, radar scan parameters measurement, and measurements for moving radars based on user inputs. The method further comprises generating reports for comparison of set values against the measured values to generate test reports and system performance assessment. Figure 2

No. of Pages : 36 No. of Claims : 9

(12) PATENT APPLICATION PUBLICATION
(21) Application No.202441036970 A
(19) INDIA
(22) Date of filing of Application :10/05/2024
(43) Publication Date : 14/11/2025

(54) Title of the invention : MANUFACTURING OF THE HELMET FOR THE MOTOR BIKE RIDERS

(51) International classification	:A42B0003040000, A42B0003300000, A42B0003280000, A42B0003220000, B62K0025040000	(71)**Name of Applicant :** **1)Juvva. Phani kumar** Address of Applicant :JUVA. PHANI KUMAR, S/O VARA PRASADA RAO, VELPUR (POST), ATCHAMPET (MANDAL), GUNTUR DIST. PIN-522410, ANDHRA PRADESH, INDIA. Andhra Pradesh India
(31) Priority Document No	:NA	(72)**Name of Inventor :**
(32) Priority Date	:NA	**1)Juvva. Phani kumar**
(33) Name of priority country	:NA	
(86) International Application No	:NA	
Filing Date	:NA	
(87) International Publication No	: NA	
(61) Patent of Addition to Application Number	:NA	
Filing Date	:NA	
(62) Divisional to Application Number	:NA	
Filing Date	:NA	

(57) Abstract :
ABSTRACT The present invention relates to a helmet support system (100) for motorbike riders that reduces neck strain and improves comfort by transferring the weight of a helmet shell (102) onto the rider's shoulders through a retrofittable support structure (104). The support structure (104) is attachable and displacement and comprises at least one configuration selected from: a flexible pipe and/or rod frame resting on the shoulders, a semi-circular neck and shoulder band adapted to cling around the rider, and a pair of side handles with grippers. A vent (108) in the helmet shell (102) allows the airflow of and reduce heat buildup. Adjustable connectors (110) are provided to vary the height, tilt, or spacing of the helmet shell (102). A fastening means secures the support structure (104) to the rider's body. The figure associated with the abstract is Fig.1

No. of Pages : 21 No. of Claims : 8

(12) PATENT APPLICATION PUBLICATION

(21) Application No.202441037004 A

(19) INDIA

(22) Date of filing of Application :10/05/2024

(43) Publication Date : 14/11/2025

(54) Title of the invention : METAMATERIAL BASED REFLECTIVE UNIT CELL FO REFLECTIVE SURFACES AND METHOD OF MANUFACTURING THEREOF

(51) International classification	:G02B1/00, G02F1/29
(31) Priority Document No	:NA
(32) Priority Date	:NA
(33) Name of priority country	:NA
(86) International Application No	:NA
Filing Date	:NA
(87) International Publication No	: NA
(61) Patent of Addition to Application Number	:NA
Filing Date	:NA
(62) Divisional to Application Number	:NA
Filing Date	:NA

(71)**Name of Applicant :**

1)L&T Technology Services Limited

Address of Applicant :DLF IT SEZ Park, 2nd Floor – Block 3 1/124, Mount Poonamallee Road Ramapuram, Chennai – 600 089, Tamil Nadu, India. Chennai Tamil Nadu India

(72)**Name of Inventor :**

1)KHEMANI RAKESH VASDEV

2)FARAZ AHMAD

(57) Abstract :

5 A reflective meta-surface (102) and a method (500) of manufacturing the reflective meta-surface (102) is provided. The reflective meta-surface (102) comprises a plurality of unit cells (112) arranged in a pre-defined pattern. The plurality of unit cells (112) is formed by disposing a loading plane (206) on a first top surface (204) of a first dielectric substrate (202). A second dielectric substrate (211) is disposed on the first top surface (204) of the first dielectric 10 substrate (202) sandwiching the loading plane (206). Further, disposing a conducting plane (216) on a second top surface (212) of the second dielectric substrate (211). The conducting plane (216) is a negative conjugate of the loading plane (206).

No. of Pages : 26 No. of Claims : 20

(12) PATENT APPLICATION PUBLICATION
(21) Application No.202441037033 A
(19) INDIA
(22) Date of filing of Application :10/05/2024
(43) Publication Date : 14/11/2025

(54) Title of the invention : SLUMBER ELISION FOR DRIVERS

(51) International classification	:G08B0021060000, G08G0001160000, A61B0005000000, A61B0005180000, B60K0028060000
(31) Priority Document No	:NA
(32) Priority Date	:NA
(33) Name of priority country	:NA
(86) International Application No	:NA
Filing Date	:NA
(87) International Publication No	: NA
(61) Patent of Addition to Application Number	:NA
Filing Date	:NA
(62) Divisional to Application Number	:NA
Filing Date	:NA

(71)**Name of Applicant :**
1)Pavithra S
Address of Applicant :SRI SHAKTHI INSTITUTE OF ENGINEERING AND TECHNOLOGY, SRI SHAKTHI NAGAR,L&T BY-PASS CHINNIYAMPALAYAM, COIMBATORE,TAMIL NADU-641062. Tamil Nadu India
(72)**Name of Inventor :**
1)Boomika V
2)Jeya Sree Bala
3)Prisha

(57) Abstract :
The Slumber elision for drivers is a vital invention meant to tackle the dangerous problem of driver sleepiness, which is a major cause of traffic accidents globally. This device uses a variety of behavioral and physiological markers to identify when a driver starts to become sleepy, giving early alerts to help avoid potential collisions. The alert system keeps track ofthe alertness levels of drivers using sophisticated sensor technologies and algorithms. When fatigue signals are recognized,it intervenes with an aural, visual, or vibrating signal. The Creation, operation, and efficacy oi in Reducing the dangers of driver drowsiness are examined In this abstract and preventing fatalities.

No. of Pages : 7 No. of Claims : 2

(12) PATENT APPLICATION PUBLICATION
(21) Application No.202441037048 A
(19) INDIA
(22) Date of filing of Application :10/05/2024
(43) Publication Date : 14/11/2025

(54) Title of the invention : SYSTEM AND METHOD FOR PANORAMIC IMAGE GENERATION OF MOVING OBJECT USING STATIC IMAGING DEVICE

(51) International classification	:H04N0005232000, G06T0003400000, H04N0021450000, H04N0019167000, H04N0021810000	(71)**Name of Applicant :** **1)DOCKER VISION PRIVATE LIMITED** Address of Applicant :14/291 K, Suite 74A, 1 st Floor, A Square, Edappally Pukkattupady Road, Edathala PO, Kuzhivelippady, Kunnathunad, Kerala, 683561 India Kunnathunad Kerala India
(31) Priority Document No	:NA	(72)**Name of Inventor :**
(32) Priority Date	:NA	**1)Athira M**
(33) Name of priority country	:NA	**2)Prajith Nair**
(86) International Application No	:NA	
Filing Date	:NA	
(87) International Publication No	: NA	
(61) Patent of Addition to Application Number	:NA	
Filing Date	:NA	
(62) Divisional to Application Number	:NA	
Filing Date	:NA	

(57) Abstract :
ABSTRACT A system (100) for generating a panoramic image of a moving object (202) using static imaging device (104). The system (100) comprising a processor (106) configured to receive a plurality of video frames of the moving object (202) captured sequentially in a direction of movement of the moving object (202), identify a set of relevant video frames from the plurality of captured video frames, select a region of interest (ROI) from each identified video frame of the set of relevant video frames, identify a set of key points from the selected ROI of each identified video frame, determine pixel distances between two or more identified key points from the set of key points that are visible in the overlapped video frames and align and merge the ROI selected from each identified video frame to generate the panoramic image. FIG. 1

No. of Pages : 27 No. of Claims : 10

(12) PATENT APPLICATION PUBLICATION
(21) Application No.202441037111 A
(19) INDIA
(22) Date of filing of Application :10/05/2024
(43) Publication Date : 14/11/2025

(54) Title of the invention : METHOD AND SYSTEM FOR FIXED HEADER FIELD OPTIONS FOR SIXTH-GENERATION RADIO ACCESS NETWORK

(51) International classification	:H04L0069220000, H04W0028060000, H04B0007060000, H04L0012280000, H04W0080020000
(31) Priority Document No	:NA
(32) Priority Date	:NA
(33) Name of priority country	:NA
(86) International Application No	:NA
Filing Date	:NA
(87) International Publication No	: NA
(61) Patent of Addition to Application Number	:NA
Filing Date	:NA
(62) Divisional to Application Number	:NA
Filing Date	:NA

(71)**Name of Applicant :**
1)Samsung Electronics Co., Ltd.
Address of Applicant :129, Samsung-ro, Yeongtong-gu, Suwon-si, Gyeonggi-do, 16677, Republic of Korea Republic of Korea
(72)**Name of Inventor :**
1)DESHMUKH, Aneesh Narendra
2)SHARMA, Neha

(57) Abstract :
Embodiments of the disclosure describe a method for fixed header protocol processing. The method includes configuring, at a Layer 2 (L2) of a communication protocol stack, a plurality of headers with a fixed size. The plurality of headers comprises a Packet Data Convergence Protocol (PDCP) header, a Radio Link Control (RLC) header, and a Medium Access Control (MAC) sub-header. The method further includes processing, at the L2, data associated with at least one of a User Equipment (UE) and a network entity based on the plurality of configured headers.

No. of Pages : 50 No. of Claims : 18

(12) PATENT APPLICATION PUBLICATION
(21) Application No.202441037158 A
(19) INDIA
(22) Date of filing of Application :10/05/2024
(43) Publication Date : 14/11/2025

(54) Title of the invention : A METHOD FOR PRODUCING BI-2223 SUPERCONDUCTOR SUPPORTING HIGH CURRENT DENSITY

(51) International classification	:H10N60/01, C04B35/45
(31) Priority Document No	:NA
(32) Priority Date	:NA
(33) Name of priority country	:NA
(86) International Application No	:NA
Filing Date	:NA
(87) International Publication No	: NA
(61) Patent of Addition to Application Number	:NA
Filing Date	:NA
(62) Divisional to Application Number	:NA
Filing Date	:NA

(71)**Name of Applicant :**
1)University of Hyderabad
Address of Applicant :India Post Lingampally CR Rao Road, Hyderabad Central University Rd, Gachibowli, Hyderabad, Telangana 500046 Hyderabad Telangana India
(72)**Name of Inventor :**
1)Dr. Seshu Bai Vummethala
2)Dr. Rajasekharan Thankappan Pillai
3)Pawan Kumar Verma
4)Dr. Srinath Sanyadanam

(57) Abstract :
ABSTRACT The present invention relates to a method for producing a composite superconductor material. The method involves synthesizing Bi-2223 precursor powder and Ca0.86Sr0.14CuO2 (I-phase) particles, mixing them in various concentrations, dispersion in a premix, tumbling, polymerization, molding, sintering twice at 845°C with intermediate pressing, and characterization through microstructure and magnetic properties analysis. The Bi-2223 precursor powder synthesis includes dissolving Bi2O3, SrCO3, CuO, and CaCO3 powders in concentrated Nitric Acid, followed by drying, grinding, and annealing at 800°C. The I-phase particles synthesis involves combusting metal nitrates with urea, grinding, and annealing at 500°C. The resulting composite material demonstrates enhanced superconducting properties up to 77 K, with optimized distribution and morphology of I-phase particles. Figure associated with Abstract is Fig. 1

No. of Pages : 24 No. of Claims : 13

(12) PATENT APPLICATION PUBLICATION
(21) Application No.202441037162 A
(19) INDIA
(22) Date of filing of Application :10/05/2024
(43) Publication Date : 14/11/2025

(54) Title of the invention : SYNTHESIS OF DAPRODUSTAT

(51) International classification	: C07D239/60, A61K31/513, A61P7/06	(71)**Name of Applicant :** **1)GRANULES INDIA LIMITED** Address of Applicant :GRANULES INDIA LIMITED My Home Hub, 2nd Floor, 3rd Block, Madhapur, Hyderabad, Telangana, India. - 500 081 Hyderabad Telangana India
(31) Priority Document No	:NA	(72)**Name of Inventor :**
(32) Priority Date	:NA	**1)Pullela Venkata Srinivas**
(33) Name of priority country	:NA	**2)Sampath Kumar Upparapalli**
(86) International Application No	:NA	**3)Ravindra Vedantham**
Filing Date	:NA	**4)Raju Veeramalla**
(87) International Publication No	: NA	**5)Vishnu Nomula**
(61) Patent of Addition to Application Number	:NA	
Filing Date	:NA	
(62) Divisional to Application Number	:NA	
Filing Date	:NA	

(57) Abstract :
The present invention relates to an improved process for the preparation of Daprodustat. Specifically, the invention provides a simple, cost-effective, commercially viable, and industrially applicable method for synthesizing Daprodustat of formula I. Formula I

No. of Pages : 19 No. of Claims : 8

(12) PATENT APPLICATION PUBLICATION
(21) Application No.202441037182 A
(19) INDIA
(22) Date of filing of Application :10/05/2024
(43) Publication Date : 14/11/2025

(54) Title of the invention : VARIABLE LOCK ARCH BAR FOR MAXILLOMANDIBULAR FIXATION

(51) International classification	:A61B0017860000, A61B0006000000, A61B0017800000, A61B0017700000, A61B0018220000
(31) Priority Document No	:NA
(32) Priority Date	:NA
(33) Name of priority country	:NA
(86) International Application No	:NA
Filing Date	:NA
(87) International Publication No	: NA
(61) Patent of Addition to Application Number	:NA
Filing Date	:NA
(62) Divisional to Application Number	:NA
Filing Date	:NA

(71)**Name of Applicant :**
1)Yenepoya (Deemed To Be University)
Address of Applicant :Yenepoya (Deemed to be University), University Road, Deralakatte. Deralakatte Karnataka India
(72)**Name of Inventor :**
1)Dr Vini D Machchhar
2)Dr Arvind Rao. H. T

(57) Abstract :
ABSTRACT VARIABLE LOCK ARCH BAR FOR MAXILLOMANDIBULAR FIXATION The present disclosure relates to a variable lock arch bar(s) for maxillomandibular fixation. More particularly, the disclosure involves a maxillomandibular device comprising of variable lock arch bar(s) with hooks and rectangular slots, self-tapping screws and stainless-steel wire(s). The said device provides flexibility by permitting screws to be positioned in multiple rectangular slots of the arch bar(s), creating space for minimizing the risk of tooth root damage. Furthermore, the self-tapping screws are placed in regions of intact bone at a 90-degree angle to ensure optimal stability.

No. of Pages : 46 No. of Claims : 17

(12) PATENT APPLICATION PUBLICATION
(21) Application No.202441037183 A
(19) INDIA
(22) Date of filing of Application :10/05/2024
(43) Publication Date : 14/11/2025

(54) Title of the invention : MULTIFUNCTION DRIVE-BY-WIRE CONTROL SYSTEM AND METHOD WITH INTEGRATED PROCESSOR AND INTERFACES

(51) International classification	:G05D0001000000, G05D0001020000, B60W0010200000, B62D0015020000, B60W0050000000
(31) Priority Document No	:NA
(32) Priority Date	:NA
(33) Name of priority country	:NA
(86) International Application No	:NA
Filing Date	:NA
(87) International Publication No	: NA
(61) Patent of Addition to Application Number	:NA
Filing Date	:NA
(62) Divisional to Application Number	:NA
Filing Date	:NA

(71)**Name of Applicant :**
1)NMICPS Technology Innovation Hub On Autonomous Navigation Foundation
Address of Applicant :C/o Indian Institute of Technology Hyderabad, Kandi, Sangareddy, Telangana Kandi Telangana India
2)Indian Institute Of Technology Hyderabad
(72)**Name of Inventor :**
1)PROF. RAJALAKSHMI PACHAMUTHU
2)DR. KRATIKA YADAV
3)DR. SWAPNIL DIPAK SHINDE

(57) Abstract :
ABSTRACT MULTIFUNCTION DRIVE-BY-WIRE CONTROL SYSTEM AND METHOD WITH INTEGRATED PROCESSOR AND INTERFACES The present invention relates to a multifunction drive-by-wire control system and method with integrated processor and interface. The invention provides a multifunction drive-by-wire control system and method with integrated processor and interface. This is a centralized control method to seamlessly integrate and control the steering, braking, and throttle systems of an autonomous vehicle. At the core of the control board is a powerful microprocessor capable of executing the commands based on the inputs from the sensors in real-time. The control board includes a memory module to store the operating system, firmware, and other necessary components. Published with Figure 1

No. of Pages : 26 No. of Claims : 3

(12) PATENT APPLICATION PUBLICATION
(21) Application No.202441037190 A
(19) INDIA
(22) Date of filing of Application :10/05/2024
(43) Publication Date : 14/11/2025

(54) Title of the invention : IMMOBILIZED POLYCULTURE MICROALGAL RAFTS FOR PHYCOREMEDIATION OF LENTIC SYSTEMS AND BIOMASS PRODUCTION

(51) International classification	:C12N0001120000, A01G0033000000, C12M0001090000, A01K0061100000, C02F0003320000
(31) Priority Document No	:NA
(32) Priority Date	:NA
(33) Name of priority country	:NA
(86) International Application No	:NA
Filing Date	:NA
(87) International Publication No	: NA
(61) Patent of Addition to Application Number	:NA
Filing Date	:NA
(62) Divisional to Application Number	:NA
Filing Date	:NA

(71)**Name of Applicant :**
1)Madras Christian College
Address of Applicant :MCC-MRF INNOVATION PARK, Madras Christian College, East Tambaram, Chennai – 600 059, India Tamil Nadu India
(72)**Name of Inventor :**
1)Mr Judah Jacob
2)Dr Polur Hanumantha Rao
3)Mr Allwin Vinoth Jayakumar

(57) Abstract :
IMMOBILIZED POLYCULTURE MICROALGAL RAFTS FOR PHYCOREMEDIATION OF LENTIC SYSTEMS AND BIOMASS PRODUCTION A system (100) for treating a polluted water body (200) comprises a raft assembly (102), one or more reusable substrates (104), and a polyculture of one or more than one species of immobilized microalgae (108). The raft assembly (102) is configured to float on a surface of a water body (200) and the reusable substrates (104) are suspended vertically from the raft assembly (102) into the water body (200) at varying depths. The immobilized microalgae (108) adhere to the reusable substrates (104) and are adapted to consume nutrients. Accordingly, the immobilized microalgae (108) transform and removes organic, inorganic, and toxic pollutants from the water body (200) (See FIGURES 1A-2C).

No. of Pages : 38 No. of Claims : 21

(12) PATENT APPLICATION PUBLICATION
(21) Application No.202441037192 A
(19) INDIA
(22) Date of filing of Application :10/05/2024
(43) Publication Date : 14/11/2025

(54) Title of the invention : TRIPLE FUNCTION ISOLATOR PEN (T-FIP)

(51) International classification	:C12M0001300000, H01J0031500000, G01N0001200000, C12N0005073500, G01N0001180000
(31) Priority Document No	:NA
(32) Priority Date	:NA
(33) Name of priority country	:NA
(86) International Application No	:NA
Filing Date	:NA
(87) International Publication No	: NA
(61) Patent of Addition to Application Number	:NA
Filing Date	:NA
(62) Divisional to Application Number	:NA
Filing Date	:NA

(71)**Name of Applicant :**
1)Madras Christian College
Address of Applicant :MCC-MRF INNOVATION PARK, Madras Christian College, East Tambaram, Chennai-59, Tamil Nadu, India Tamil Nadu India
(72)**Name of Inventor :**
1)Dr. T. Sathish Kumar
2)Samson Lijoseraj C

(57) Abstract :
TRIPLE FUNCTION ISOLATOR PEN (T-FIP) An isolator device (100) for microbial culture isolation and enumeration comprises multiple components. A first section (102) comprises an isolation tip (104) to operate in multiple modes. A splitter ring (106) is connected to the isolation tip (104) and shifts between the multiple modes by movement of the splitter ring (106) along a predefined length of the first section (102) to maintain a single loop configuration or a plurality-loop configuration. A second section (108) comprises a suction member (110) for aspirating and dispensing microbial liquid sample in controlled volumes. A volume setter (112) is connected to the suction member (110). An L-shaped rod (114) positioned at the rear end of the isolator device (100), which injects and spreads the microbial liquid sample. A retraction member (116) is connected to a plunger (110a) of the suction member (110), which automatically returns the volume setter (112) to a default position after each use (Refer FIGURES 1A and 3A).

No. of Pages : 41 No. of Claims : 17

(12) PATENT APPLICATION PUBLICATION
(21) Application No.202441037199 A
(19) INDIA
(22) Date of filing of Application :10/05/2024
(43) Publication Date : 14/11/2025

(54) Title of the invention : A ROTATING MEMBER

(51) International classification	:F16H0057040000, F16D0065120000, F16D0055000000, H02K0001200000, F16D0065020000	(71)**Name of Applicant :** **1)TVS Motor Company Limited** Address of Applicant :Jayalakshmi Estate, No 29 (Old No 8), Haddows Road Tamil Nadu India **2)TVS Motor Company Limited**
(31) Priority Document No	:NA	(72)**Name of Inventor :**
(32) Priority Date	:NA	**1)S DHEVARAJ**
(33) Name of priority country	:NA	**2)WINNEY K MATHEW**
(86) International Application No	:NA	
Filing Date	:NA	
(87) International Publication No	: NA	
(61) Patent of Addition to Application Number	:NA	
Filing Date	:NA	
(62) Divisional to Application Number	:NA	
Filing Date	:NA	

(57) Abstract :
Aspect of the present invention pertains to a rotatable member (220), comprising one or more portions (220F, 220S, 220T), at least one of the one or more portions (220F, 220S, 220T) is adapted to have a plurality of passages (220AP, 220RP). In an aspect, the plurality of passages (220AP, 220RP) is configured to circulate a fluid in a brake assembly (200). The present subject matter ensures the optimum lubrication of the brake assembly (200) without dismantling any brake assembly component. Further, the rotatable member (220) reduces the overall weight and cost of the brake assembly (200) as the material being optimally removed from the rotating member (220) without compromising on the durability and reliability of the drum brake assembly (200). To be published with Fig. 3a

No. of Pages : 18 No. of Claims : 10

(12) PATENT APPLICATION PUBLICATION
(21) Application No.202441037201 A
(19) INDIA
(22) Date of filing of Application :10/05/2024
(43) Publication Date : 14/11/2025

(54) Title of the invention : A STRADDLE TYPE VEHICLE

(51) International classification	:H01H0003300000, F04B0017030000, H01M0004040000, B60K0001020000, F16F0001120000	(71)**Name of Applicant :** **1)TVS Motor Company Limited** Address of Applicant :Jayalakshmi Estate, No 29 (Old No 8), Haddows Road Tamil Nadu India **2)TVS Motor Company Limited**
(31) Priority Document No	:NA	(72)**Name of Inventor :**
(32) Priority Date	:NA	**1)RAKESH PREMCHAND**
(33) Name of priority country	:NA	**2)CHIRANJEEVI VADIVELU**
(86) International Application No	:NA	**3)SORNAPPAN BANU SHARMANATH**
Filing Date	:NA	**4)SIDDAPURA NAGARAJU PRASHANTH**
(87) International Publication No	: NA	**5)LOHIT VISHWANATH PATIL**
(61) Patent of Addition to Application Number	:NA	
Filing Date	:NA	
(62) Divisional to Application Number	:NA	
Filing Date	:NA	

(57) Abstract :
The present invention relates to an arrestor assembly (103) and a straddle type vehicle (100). The straddle type vehicle (100) includes a frame assembly (101), an energy storage box (102) and at least one arrestor assembly (103). The energy storage box (102) is detachably attached to the frame assembly (101). The at least one arrestor assembly (103) is detachably attached to the energy storage box (102). The at least one arrestor assembly (103) comprising a first member (103A) and a second member (103B). The first member (103A) is operatively connected to the second member (103B) to arrest unintentional movement of one or more energy resources. To be published with figure 1b

No. of Pages : 18 No. of Claims : 10

(12) PATENT APPLICATION PUBLICATION
(19) INDIA
(22) Date of filing of Application :10/05/2024
(21) Application No.202441037202 A
(43) Publication Date : 14/11/2025

(54) Title of the invention : A VEHICLE

(51) International classification	:H01M0050200000, B60L0015200000, B60L0003000000, B60W0030120000, H04W0004700000
(31) Priority Document No	:NA
(32) Priority Date	:NA
(33) Name of priority country	:NA
(86) International Application No	:NA
Filing Date	:NA
(87) International Publication No	: NA
(61) Patent of Addition to Application Number	:NA
Filing Date	:NA
(62) Divisional to Application Number	:NA
Filing Date	:NA

(71)**Name of Applicant :**
1)TVS Motor Company Limited
Address of Applicant :Jayalakshmi Estate, No 29 (Old No 8), Haddows Road Tamil Nadu India
2)TVS Motor Company Limited
(72)**Name of Inventor :**
1)CHINNASAMY GOVINDAN
2)LAVANYA VENKATESH
3)SHAILESH KUMAR
4)DHODDANNAN RAJASHANMUGAM
5)SIVARAM SRINIVASAN
6)DATTA RAJARAM SAGARE

(57) Abstract :
A VEHICLE The present subject matter relates to vehicle (100) comprising a control unit (110). The control unit (110) is disposed in a pre-defined region of the vehicle (100). The pre-defined region is a front frame portion (102F) of the frame assembly (102) of the vehicle (100). The control unit (110) is communicatively connected to at least one of one or more energy storage units (108), a transmission unit (112) and one or more electrical components disposed in the vehicle (100). The pre-defined region of disposition of the control unit (110) ensures adequate protection be accorded to the control unit (110) against external impacts and ensures optimum length of one or more connectors connecting the control unit (110) to at least one of one or more energy storage units (108), a transmission unit (112) and one or more electrical components. To be published with Figure 1

No. of Pages : 26 No. of Claims : 10

(12) PATENT APPLICATION PUBLICATION
(21) Application No.202441037203 A
(19) INDIA
(22) Date of filing of Application :10/05/2024
(43) Publication Date : 14/11/2025

(54) Title of the invention : A SENSING ASSEMBLY FOR A VEHICLE

(51) International classification	:B62K0015000000, H01M0010480000, F16F0015000000, B62K0021120000, G01P0015080000	(71)**Name of Applicant :** **1)TVS Motor Company Limited** Address of Applicant :Jayalakshmi Estate, No 29 (Old No 8), Haddows Road Tamil Nadu India **2)TVS Motor Company Limited**
(31) Priority Document No	:NA	(72)**Name of Inventor :**
(32) Priority Date	:NA	**1)Nikhiladheesh Yogish Krishna**
(33) Name of priority country	:NA	**2)Kartheeban Malainadan Selvamoney**
(86) International Application No	:NA	**3)Lakshmanan Subramanian**
Filing Date	:NA	**4)Senthilnathan Subbi**
(87) International Publication No	: NA	**5)Siddapura Nagaraju Prashanth**
(61) Patent of Addition to Application Number	:NA	
Filing Date	:NA	
(62) Divisional to Application Number	:NA	
Filing Date	:NA	

(57) Abstract :
A SENSING ASSEMBLY FOR A VEHICLE As per an embodiment of the present invention, a vehicle (100) comprising a handlebar assembly (103), a front wheel assembly (110), a cluster assembly, and sensing assembly. The handlebar assembly is configured to enable manoeuvring of the vehicle. The front wheel assembly (110) is coupled to the handlebar assembly 5 (103). The sensing assembly (108) is configured at a predefined zone (104) between the front wheel assembly (110) and a cluster assembly (102). The pre-defined zone (104) ensure that no other object or vehicle (100) component comes in the way of the FOV of the sensing assembly (108). Therefore, the sensing unit (108) is configured to operate at optimum capacity. In other words, the present invention to 10 mount the sensing assembly (108) in such a way that the FOV of the sensing unit (402) is not interfered due to any other vehicle (100) components. To be published with Fig. 1

No. of Pages : 30 No. of Claims : 21

(12) PATENT APPLICATION PUBLICATION
(21) Application No.202441037207 A
(19) INDIA
(22) Date of filing of Application :10/05/2024
(43) Publication Date : 14/11/2025

(54) Title of the invention : VEHICLE ACCESS MANAGEMENT SYSTEM AND METHOD THEREOF

(51) International classification	:G07C0009000000, H04W0004020000, B60R0025240000, H04L0009080000, H04W0012080000	(71)**Name of Applicant :** **1)TVS Motor Company Limited** Address of Applicant :Jayalakshmi Estate, No 29 (Old No 8), Haddows Road Tamil Nadu India **2)TVS Motor Company Limited**
(31) Priority Document No	:NA	(72)**Name of Inventor :**
(32) Priority Date	:NA	**1)Gudi Venkata Ramana**
(33) Name of priority country	:NA	
(86) International Application No	:NA	
Filing Date	:NA	
(87) International Publication No	: NA	
(61) Patent of Addition to Application Number	:NA	
Filing Date	:NA	
(62) Divisional to Application Number	:NA	
Filing Date	:NA	

(57) Abstract :
VEHICLE ACCESS MANAGEMENT SYSTEM AND METHOD THEREOF The present invention provides a vehicle access management system 5 comprises a vehicle (206), an owner device (202), a user device (204). The owner device (202) is communicably connected with the server (208) and the vehicle (206). The user device (204) is communicably connected with the owner device (202), the server (208), and the vehicle (206). The server (208) generates a dynamic digital key, for the vehicle (206) registered on the server 10 (208), when a request for access to the vehicle (206) is approved by the owner. The request for access is sent by the user device (204) to the owner device (202)and the user receives a response comprising the dynamic digital key forthe request. The vehicle (206) authorizes access to the user based on at leastthe response, the dynamic digital key and an access key. 15 To be published with Figure 2B, 2C

No. of Pages : 30 No. of Claims : 14

(12) PATENT APPLICATION PUBLICATION
(21) Application No.202441037219 A
(19) INDIA
(22) Date of filing of Application :10/05/2024
(43) Publication Date : 14/11/2025

(54) Title of the invention : A VEHICLE LOCK SYSTEM AND METHOD THEREOF

(51) International classification	:G07C0009000000, B60R0025200000, B60W0050000000, E05B0049000000, H04W0012043100	(71)**Name of Applicant :** **1)TVS Motor Company Limited** Address of Applicant :Jayalakshmi Estate, No 29 (Old No 8), Haddows Road Tamil Nadu India **2)TVS Motor Company Limited**
(31) Priority Document No	:NA	(72)**Name of Inventor :**
(32) Priority Date	:NA	**1)Gudi Venkata Ramana**
(33) Name of priority country	:NA	
(86) International Application No	:NA	
Filing Date	:NA	
(87) International Publication No	: NA	
(61) Patent of Addition to Application Number	:NA	
Filing Date	:NA	
(62) Divisional to Application Number	:NA	
Filing Date	:NA	

(57) Abstract :
A VEHICLE LOCK SYSTEM AND METHOD THEREOF The present invention provides a vehicle lock system (100), the vehicle lock system (100) comprises a vehicle (104), a control unit (102). The vehicle 5 (104)comprises a plurality of mechanical components (106) and a userinterface (108). The control unit (102) can record actuation of the plurality ofmechanical components (106) in a sequential series performed by a user. Thecontrol unit (102) receives a server status of the vehicle (104). The controlunit (102) verifies the sequential series of actuation of the plurality of 10 mechanical components (106) performed by the user against a predefined sequential series. The user interface (108) enables input for a security key upon successful verification of the sequential series performed by the user when the server status is a connected server status. The control unit (102) unlocks the vehicle (104) in a first mode upon verification of the security key. 15 To be published with Figure 1

No. of Pages : 32 No. of Claims : 20

(12) PATENT APPLICATION PUBLICATION
(21) Application No.202441037242 A
(19) INDIA
(22) Date of filing of Application :11/05/2024
(43) Publication Date : 14/11/2025

(54) Title of the invention : AN ANTI-THEFT MIRROR ASSEMBLY FOR A VEHICLE

(51) International classification	:B60R0001120000, B60Q0001260000, F16B0041000000, E03C0001040000, E02F0009240000
(31) Priority Document No	:NA
(32) Priority Date	:NA
(33) Name of priority country	:NA
(86) International Application No	:NA
Filing Date	:NA
(87) International Publication No	: NA
(61) Patent of Addition to Application Number	:NA
Filing Date	:NA
(62) Divisional to Application Number	:NA
Filing Date	:NA

(71)**Name of Applicant :**
1)LECTRIX TECHNOLOGIES PRIVATE LIMITED
Address of Applicant :67f, Bommasandra Link Road, Bommasandra Industrial Area, Bengaluru, Bommasandra, Karnataka 560099 Bangalore Karnataka India
(72)**Name of Inventor :**
1)Mohit Yadav
2)Vikas Survase

(57) Abstract :
AN ANTI-THEFT MIRROR ASSEMBLY FOR A VEHICLE The present disclosure provides an anti-theft mirror assembly for a vehicle. This assembly 100 includes at least one mirror 102 with a connecting mean 104, which is connected with the at least one mirror 102 and the other end of the connecting mean 104 is detachably installed in a mounting base body 108 via an installation hole 110 present on an upper cover 106 of the mounting base body 108. The assembly further includes an attaching body 112 which has a fixing hole 120 to connect the other end of the connecting mean 102 to the attaching body 112 and a plurality of protuberances 114 at a downside of the attaching body 112. Further, a plurality of locking grooves 116 arranged at an inside of the upper cover 106 of the mounting base body 108 to detachably secure the attaching body 112 using the plurality of protuberances 114. (FIG.1a and 1b)

No. of Pages : 23 No. of Claims : 10

(12) PATENT APPLICATION PUBLICATION
(21) Application No.202441037265 A
(19) INDIA
(22) Date of filing of Application :11/05/2024
(43) Publication Date : 14/11/2025

(54) Title of the invention : VIRTUAL AI MODEL INTERACTION (AUDIO/VIDEO) WITH USERS

(51) International classification	:G06N0005040000, G06Q0010000000, G10L0015260000, G06N0020000000, G06Q0030020000	(71)**Name of Applicant :** **1)HOODS HUB PRIVATE LIMITED** Address of Applicant :Plot No.1,2 T3, Third Floor, Royal Court Apts, Balaiya Garden, Madipakkam Chennai – 600091 Madipakkam Tamil Nadu India (72)**Name of Inventor :** **1)Kumaresh Alamelumangapuram Krishnan**
(31) Priority Document No	:NA	
(32) Priority Date	:NA	
(33) Name of priority country	:NA	
(86) International Application No	:NA	
Filing Date	:NA	
(87) International Publication No	: NA	
(61) Patent of Addition to Application Number	:NA	
Filing Date	:NA	
(62) Divisional to Application Number	:NA	
Filing Date	:NA	

(57) Abstract :
A user interaction model that leverages an AI/Metahuman face interface to provide a more interactive and engaging platform for users. Unlike static online forms, this model dynamically adjusts the questions based on previous responses, focusing on relevance to the user and enhancing participation rates. It also features advanced privacy options, including disabling face recognition and voice-to-text conversion, ensuring user comfort and security. Additionally, the model supports multilingual interactions and regional accents, broadening accessibility and inclusivity. By offering a more personalized and user-friendly approach, this model aims to significantly increase participation of user by using the input given, enabling deeper insights and more effective product and service improvements.

No. of Pages : 16 No. of Claims : 6

(12) PATENT APPLICATION PUBLICATION
(21) Application No.202441037359 A
(19) INDIA
(22) Date of filing of Application :12/05/2024
(43) Publication Date : 14/11/2025

(54) Title of the invention : DESIGN AND DEVELOPMENT OF SOIL AUGER CUM BASIN FORMER

(51) International classification	:A01C0015000000, E21B0007060000, E21B0007020000, B27G0015000000, E21B0010440000
(31) Priority Document No	:NA
(32) Priority Date	:NA
(33) Name of priority country	:NA
(86) International Application No	:NA
Filing Date	:NA
(87) International Publication No	: NA
(61) Patent of Addition to Application Number	:NA
Filing Date	:NA
(62) Divisional to Application Number	:NA
Filing Date	:NA

(71)**Name of Applicant :**
1)Vasundhara Arul Murugesan
Address of Applicant :341, Andankovil Pudur Colony, Andankovil East, Andankovil Post, Manmangalam Taluk Tamil Nadu India
2)Dr. V. Dharmaraj
3)Ms. J. Karunya
4)Ms. Meera Nair
5)Ms. P. Nevetha
6)Ms. C. Rina
7)Mr. K.Mohan
8)Ms. A. Harini
9)Mr. V. Gnanaprakash
10)Mr. M. Dinesh kumar
(72)**Name of Inventor :**
1)Vasundhara Arul Murugesan
2)Dr. V. Dharmaraj
3)Ms. J. Karunya
4)Ms. Meera Nair
5)Ms. P. Nevetha
6)Ms. C. Rina
7)Mr. K.Mohan
8)Ms. A. Harini
9)Mr. V. Gnanaprakash
10)Mr. M. Dinesh kumar

(57) Abstract :
DESIGN AND DEVELOPMENT OF SOIL AUGER CUM BASIN FORMER The production of agriculture is one of the most discussed problems, as it significantly impacts a large part of our population. Changing and developing technology in agricultural practices has resulted in improved agricultural productivity in India. It's always the introduction of alternate technologies that smoothens the manual work. Planting saplings is one among the activities which require a step by step procedure. Two major steps in plantation involve digging and basin creation. Such kind of plantation may include the varieties like rubber, coconut, banana, mango, apple, pine, etc. Mostly it's the D.C motor powered or diesel engine powered augers handle the digging works efficiently. Basin formation is essential in the areas of water scarcity to properly collect and utilize rainwater for irrigation. Nowadays improved designs of augers are available catering to much specific functionality. This project also aims to use the principles of augering for basin formation. Integrating both digging and basin creating mechanism in one machine would enhance the plantation process. This project develops an auger cum bund former which would help in saving the time and money wasted for handling separate machines, hence making the whole process facile. The entire setup in its vertical alignment of auger bit would allow directional drilling while its horizontal alignment supports the basin formation around the plants. The auger is raised and lowered using the brake wire mechanism, thus making it maneuverable.

No. of Pages : 6 No. of Claims : 1

(12) PATENT APPLICATION PUBLICATION
(21) Application No.202441037361 A
(19) INDIA
(22) Date of filing of Application :12/05/2024
(43) Publication Date : 14/11/2025

(54) Title of the invention : MANAGING USER EQUIPMENT UNAVAILABILITY IN A COMMUNICATION SYSTEM

(51) International classification	:H04B0007185000, B64G0001100000, H04R0001300000, H04L0069400000, H04B0007195000	(71)**Name of Applicant :** **1)SAMSUNG ELECTRONICS CO., LTD.** Address of Applicant :129, Samsung-ro Yeongtong-gu, Suwon-si, Gyeonggi-do - Republic of Korea Republic of Korea
(31) Priority Document No	:NA	(72)**Name of Inventor :** **1)Lalith Kumar** **2)Basavaraj Jayawant Pattan**
(32) Priority Date	:NA	
(33) Name of priority country	:NA	
(86) International Application No	:NA	
Filing Date	:NA	
(87) International Publication No	: NA	
(61) Patent of Addition to Application Number	:NA	
Filing Date	:NA	
(62) Divisional to Application Number	:NA	
Filing Date	:NA	

(57) Abstract :
ABSTRACT “MANAGING USER EQUIPMENT UNAVAILABILITY IN A COMMUNICATION SYSTEM” Embodiments disclosed herein describe a method and apparatus for managing UE unavailability in a communication system. The method includes at a first network apparatus (200), a request message is received from a second network apparatus (300) for UE unavailability information for a plurality of UEs, further, the request message includes a UE identity and a service identity for which the UE (400) has registered to satellite access. The first network apparatus (200) then determines the UE unavailability information based on Satellite Coverage Availability Information (SCAI) and the location of the UE (400). The first network apparatus (200) generates a response message by adding the UE unavailability information and sends the response message to the second network apparatus (300). FIG. 4

No. of Pages : 37 No. of Claims : 16

(12) PATENT APPLICATION PUBLICATION
(21) Application No.202441037372 A
(19) INDIA
(22) Date of filing of Application :13/05/2024
(43) Publication Date : 14/11/2025

(54) Title of the invention : ROTOR-BEARING ARRANGEMENT OF GAS GENERATOR TURBINE ENGINE WITH IMPROVED LUBRICATION SEALING AND BEARING SUPPORTS

(51) International classification	:F16C0027040000, F01D0011000000, F02C0007060000, F01D0025120000, F16C0019060000
(31) Priority Document No	:NA
(32) Priority Date	:NA
(33) Name of priority country	:NA
(86) International Application No	:NA
Filing Date	:NA
(87) International Publication No	: NA
(61) Patent of Addition to Application Number	:NA
Filing Date	:NA
(62) Divisional to Application Number	:NA
Filing Date	:NA

(71)**Name of Applicant :**
1)Hindustan Aeronautics Limited
Address of Applicant :Aero Engine Research and Design Centre -AERDC, Design Complex, Hindustan Aeronautics Limited AERDC, PB No.9310 C V Raman Nagar, Bangaluru, Karnataka, India – 560093. Bangalore Karnataka India
(72)**Name of Inventor :**
1)Dr. TH Gonsalves
2)Subhajit Ghosh
3)Dr. R Siva Srinivas
4)K Ramesh

(57) Abstract :
The technology involves rotor system (100) of gas generator turbine engine being supported on a deep groove ball bearing (111) and a cylindrical roller bearing (112) in tandem configuration (110) along with flexible bearing supports – a bearing housing (200) with flexible ribs (230), for improved rotor dynamic performance without any external damping. Hybrid combinations of air-oil seals have also been introduced for improved sealing against leakage of lubrication oil into gas flow path from the bearing chambers (180 & 190).

No. of Pages : 18 No. of Claims : 9

(12) PATENT APPLICATION PUBLICATION
(21) Application No.202441037386 A
(19) INDIA
(22) Date of filing of Application :13/05/2024
(43) Publication Date : 14/11/2025

(54) Title of the invention : AN ELECTROLYSIS SYSTEM WITH NICKEL HYDROXIDE (NI(OH)2) AND COBALT HYDROXIDE(CO(OH)2) DEPOSITED OVER BISMUTH FLASHED SINTERED NICKEL ELECTRODE

(51) International classification	:C25B0001040000, H01M0004320000, H01M0004520000, C25B0001020000, C25B0015080000
(31) Priority Document No	:NA
(32) Priority Date	:NA
(33) Name of priority country	:NA
(86) International Application No	:NA
Filing Date	:NA
(87) International Publication No	: NA
(61) Patent of Addition to Application Number	:NA
Filing Date	:NA
(62) Divisional to Application Number	:NA
Filing Date	:NA

(71)**Name of Applicant :**
1)K. KANAGASABAPATHI
Address of Applicant :No. 23/2, Barathiyar Street, Ponmalaipatti, Kotapattu, Trichy 620004, (Tamil Nadu, India) Tiruchirappalli Tamil Nadu India
(72)**Name of Inventor :**
1)K. KANAGASABAPATHI

(57) Abstract :
ABSTRACT: Title: An electrolysis system with Nickel Hydroxide (Ni(OH)2) and Cobalt Hydroxide(Co(OH)2) deposited over Bismuth Flashed sintered Nickel electrode Abstract The present invention relates to an electrolysis system with Nickel Hydroxide (Ni(OH)2) and Cobalt Hydroxide(Co(OH)2) deposited over Bismuth Flashed sintered Nickel electrode. The system features a sintered nickel electrode (101) coated Nickel Hydroxide (Ni(OH)2) and Cobalt Hydroxide(Co(OH)2) deposited over Bismuth flashed sintered Nickel electrode as the anode, which curbs oxygen evolution during electrolysis. Complemented by a cathode (102) for hydrogen evolution, an electrolyte solution (106), and a DC electrical power source (107), the system operates with remarkable efficiency and simplicity. The electrode design eliminates the need for a gas separator (105), streamlining system architecture and reducing operational complexities. Through the application of DC electrical power, hydrogen gas (104) is evolved at the cathode, while oxygen evolution at the anode is significantly minimized. electrolysis system offers superior energy efficiency, cost-effectiveness, and scalability compared to conventional methods, making it an attractive solution for diverse industrial gas production applications. Figure of Abstract: Fig. 1

No. of Pages : 9 No. of Claims : 4

(12) PATENT APPLICATION PUBLICATION
(21) Application No.202441037422 A
(19) INDIA
(22) Date of filing of Application :13/05/2024
(43) Publication Date : 14/11/2025

(54) Title of the invention : METHODS AND SYSTEMS FOR DETECTING FUNCTIONAL DEFECTS AT DESIGNING STAGE OF A DESIGN CODE

(51) International classification	:A61B0005000000, G06F0008410000, G10L0015180000, G11B0020180000, G06F0021570000
(31) Priority Document No	:NA
(32) Priority Date	:NA
(33) Name of priority country	:NA
(86) International Application No	:NA
Filing Date	:NA
(87) International Publication No	: NA
(61) Patent of Addition to Application Number	:NA
Filing Date	:NA
(62) Divisional to Application Number	:NA
Filing Date	:NA

(71)**Name of Applicant :**
1)SAMSUNG ELECTRONICS CO., LTD.
Address of Applicant :129 Samsung-ro, Yeongtong-gu Suwon-si, Gyeonggi-do 443-742, Republic of Korea Republic of Korea
(72)**Name of Inventor :**
1)Maruthi Srinivas Narasimhan
2)Satyam Saxena

(57) Abstract :
METHODS AND SYSTEMS FOR DETECTING FUNCTIONAL DEFECTS AT DESIGNING STAGE OF A DESIGN CODE A method for detecting one or more functional defects in a design code includes generating, using processing circuitry, Hardware Verification Language (HVL) code representing semantic behaviour of design code, the generating including identifying one or more expressions associated with the one or more functional defects in the HVL code, identifying, using the processing circuitry, one or more patterns associated with the one or more functional defects in one or more second design code written in the first language, mapping, using the processing circuitry, the one or more expressions of the HVL code with the one or more identified patterns, forming, using the processing circuitry, a bind of the one or more expressions with the one or more patterns based on the mapping, and evaluating, using the processing circuitry, the bind to identify the one or more functional defects in the design code.

No. of Pages : 28 No. of Claims : 8

(12) PATENT APPLICATION PUBLICATION
(21) Application No.202441037460 A
(19) INDIA
(22) Date of filing of Application :13/05/2024
(43) Publication Date : 14/11/2025

(54) Title of the invention : A PRESSURE COOKER LID WITH WHISTLE DETECTION ASSEMBLY

(51) International classification	:A47J0027080000, A47J0027090000, G10K0005000000, H02K0029080000, H02K0011215000	(71)**Name of Applicant :** **1)Vaya Life Private Limited** Address of Applicant :No. 129, Harrington Road, Chennai 600036 Chennai Tamil Nadu India
(31) Priority Document No	:NA	(72)**Name of Inventor :** **1)Vashist Vasanthakumar**
(32) Priority Date	:NA	**2)Balaji Sankaranarayan**
(33) Name of priority country	:NA	**3)Premanand Jayakumar**
(86) International Application No	:NA	**4)Gobinath VP**
Filing Date	:NA	
(87) International Publication No	: NA	
(61) Patent of Addition to Application Number	:NA	
Filing Date	:NA	
(62) Divisional to Application Number	:NA	
Filing Date	:NA	

(57) Abstract :
A PRESSURE COOKER LID WITH WHISTLE DETECTION ASSEMBLY ABSTRACT The present invention relates to a pressure cooker designed with a special type of lid that can count the number of whistles accurately. It comprises of the following subassemblies: pressure regulator (200), Lid sub-components (202), Body (203), handle assemblies (201), wherein the handle consists of Pressure regulator (405), Hall-effect sensor (403), Magnet (404), Lid with Gasket (300), Display unit (401) with buttons PCB Board (402), Battery (301), Buzzer (400) and the whistle count sensing operation comprises of 2 modes: whistle mode and Timer mode. The user sets the number of whistles or cooking time required using the display (201) buttons. Whenever the Pressure regulator (405) moves, the magnet (404) moves and the sensor (403) gets the signal. The processor (402) converts the signal to whistle counts. Once the Preset whistle value is reached, the processor (402) automatically triggers the Buzzer (400) indication, informing the user of completion.

No. of Pages : 23 No. of Claims : 10

(12) PATENT APPLICATION PUBLICATION
(21) Application No.202441037529 A
(19) INDIA
(22) Date of filing of Application :13/05/2024
(43) Publication Date : 14/11/2025

(54) Title of the invention : SMART BIO BIN USING ICT INFRASTRUCTURE

(51) International classification	:G06Q0010060000, A61B0005000000, B65F0001140000, A61L0011000000, G16H0040200000	(71)**Name of Applicant :**
(31) Priority Document No	:NA	**1)G Petchinathan**
(32) Priority Date	:NA	Address of Applicant :Sri Shanmugha College of Engineering and Technology, Sankari - Tiruchengode Main Road Pullipalaym, Morur (PO, TK, Sangagiri, Tamil Nadu 637304 Tamil Nadu India
(33) Name of priority country	:NA	**2)C. Karuppiah Sakthi**
(86) International Application No	:NA	**3)P. Thirunavukkarasu**
Filing Date	:NA	**4)B. Manikandan**
(87) International Publication No	: NA	**5)T. Sri Birla**
(61) Patent of Addition to Application Number	:NA	(72)**Name of Inventor :**
Filing Date	:NA	**1)G Petchinathan**
(62) Divisional to Application Number	:NA	**2)C. Karuppiah Sakthi**
Filing Date	:NA	**3)P. Thirunavukkarasu**
		4)B. Manikandan
		5)T. Sri Birla

(57) Abstract :
The project "Design and Development of Smart Bio Bin Using ICT Infrastructure" presents a comprehensive approach to revolutionizing waste management in hospital environments. Leveraging the power of Information and Communication Technology (ICT), this endeavor focuses on creating a Smart Bio Bin capable of monitoring and managing critical environmental parameters within hospital waste disposal systems. Through the integration of advanced sensors, the Smart Bio Bin enables real-time measurement and analysis of key factors such as temperature, humidity, toxicity levels, and the accumulation of garbage within the bin. In essence, the Smart Bio Bin serves as a sophisticated environmental monitoring system, providing healthcare facilities with invaluable insights into the conditions of their waste disposal infrastructure. By continuously monitoring these vital parameters, hospitals can ensure optimal environmental conditions conducive to the health and safety of patients, staff, and visitors. Moreover, the ability to track garbage levels within the bin allows for proactive waste management strategies, ensuring timely disposal and minimizing the risk of overflow or contamination. A standout feature of the Smart Bio Bin is its wireless communication capability, which enables seamless data transmission and alert generation. This proactive approach to waste management not only enhances operational efficiency but also mitigates potential hazards and ensures compliance with environmental regulations and standards. In summary, the implementation of the Smart Bio Bin represents a significant advancement in waste management practices within hospital settings. By harnessing the capabilities of ICT infrastructure, healthcare facilities can elevate their waste disposal systems to new heights of efficiency, sustainability, and safety. The Smart Bio Bin stands as a testament to the transformative potential of technology in addressing real-world challenges and fostering a cleaner, healthier environment for all

No. of Pages : 6 No. of Claims : 4

(12) PATENT APPLICATION PUBLICATION
(21) Application No.202441037546 A
(19) INDIA
(22) Date of filing of Application :13/05/2024
(43) Publication Date : 14/11/2025

(54) Title of the invention : DEVICE FOR ENABLING USERS TO PREPARE CULTURED DAIRY PRODUCT, AND METHOD THEREOF

(51) International classification	:F16C0019300000, A63B0022060000, F24F0013300000, A47L0011240000, A62B0001140000
(31) Priority Document No	:NA
(32) Priority Date	:NA
(33) Name of priority country	:NA
(86) International Application No	:NA
Filing Date	:NA
(87) International Publication No	: NA
(61) Patent of Addition to Application Number	:NA
Filing Date	:NA
(62) Divisional to Application Number	:NA
Filing Date	:NA

(71)**Name of Applicant :**
1)PUNDALIK SUBBU LAMANI
Address of Applicant :Ambalnur Lt, Ambalnur, Bijapur, Karnataka - 586203, India. Bijapur Karnataka India
(72)**Name of Inventor :**
1)PRIYANKA PUNDALIK PAWAR

(57) Abstract :
The present disclosure relates to a device for enabling users to prepare cultured dairy product. The device (102) can include bearings (104), axial (108), roller (110), holder plate (112), rope (114), hinges (116), pedals (118), and pot (120) are integrated with a wooden substrate. The pedals (118) configured to enable user to perform leg movements, where leg movements on pedals (118) configured to enable roller (110) to rotate through bearings (104) using rope (114). The roller (110) configured to enable axial (108) to rotate in clockwise direction, and anti-clockwise direction using rope (114) based on leg movements, where axial (108) positioned inside pot (120), and configured to rotate in clockwise direction, and anti-clockwise direction to prepare cultured dairy product.

No. of Pages : 17 No. of Claims : 8

(12) PATENT APPLICATION PUBLICATION
(21) Application No.202441037638 A
(19) INDIA
(22) Date of filing of Application :13/05/2024
(43) Publication Date : 14/11/2025

(54) Title of the invention : METHOD FOR DATA MANAGEMENT IN A STORAGE DEVICE AND SYSTEM THEREOF

(51) International classification	:G06F0003060000, G06F0012020000, G06F0011160000, G06F0011140000, G06F0021790000
(31) Priority Document No	:NA
(32) Priority Date	:NA
(33) Name of priority country	:NA
(86) International Application No	:NA
Filing Date	:NA
(87) International Publication No	: NA
(61) Patent of Addition to Application Number	:NA
Filing Date	:NA
(62) Divisional to Application Number	:NA
Filing Date	:NA

(71)**Name of Applicant :**
1)SAMSUNG ELECTRONICS CO., LTD.
Address of Applicant :129 Samsung-ro, Yeongtong-gu Suwon-si, Gyeonggi-do 443-742, Republic of Korea Republic of Korea
(72)**Name of Inventor :**
1)Saigun Jose Chiriyankandath
2)Narasimha Rao Mavillapalli
3)Kumar VVNMR

(57) Abstract :
The disclosure relates to a storage system and a method for data management in a nonvolatile storage device in the storage system. The method includes configuring a logical unit in the non-volatile storage device to automatically erase data stored in the logical unit during a boot up process of a host system, and un-mapping the data stored in the logical unit based on detecting that the logical unit is configured to automatically erase data stored in the logical unit in the non-volatile storage device.
Fig-3

No. of Pages : 25 No. of Claims : 12

(12) PATENT APPLICATION PUBLICATION
(21) Application No.202441037653 A
(19) INDIA
(22) Date of filing of Application :13/05/2024
(43) Publication Date : 14/11/2025

(54) Title of the invention : PRODUCTION OF BIOPLASTICS FILM USING AGRICULTURAL WASTES FOR PACKAGING DAIRY PRODUCTS

(51) International classification	:C08J0005180000, A61K0008730000, C08L0003020000, B65D0065460000, C05G0003800000
(31) Priority Document No	:NA
(32) Priority Date	:NA
(33) Name of priority country	:NA
(86) International Application No	:NA
Filing Date	:NA
(87) International Publication No	: NA
(61) Patent of Addition to Application Number	:NA
Filing Date	:NA
(62) Divisional to Application Number	:NA
Filing Date	:NA

(71)**Name of Applicant :**
1)Vasundhara Arul Murugesan
Address of Applicant :341, Andankovil Pudur Colony, Andankovil East, Andankovil Post, Manmangalam Taluk Tamil Nadu India
2)K.Lavanya
3)Ms.S.Agasthiya
4)Ms.K.Arunavarshini
5)Ms.A.R.Yuvanisha
6)Mrs.J.Ranjana
7)Dr.G.Chandrasekaran
8)Dr.V.Dharmaraj
9)Mr.V.Gnaprakash
10)Ms.V.Manoja
(72)**Name of Inventor :**
1)Vasundhara Arul Murugesan
2)K.Lavanya
3)Ms.S.Agasthiya
4)Ms.K.Arunavarshini
5)Ms.A.R.Yuvanisha
6)Mrs.J.Ranjana
7)Dr.G.Chandrasekaran
8)Dr.V.Dharmaraj
9)Mr.V.Gnaprakash
10)Ms.V.Manoja

(57) Abstract :
The amount of petroleum-based polymers used in daily life has increased. Approxímately 141 million to 143 million tons of plastic are utilized in food product packaging (Kimecopak Packaging Company). The main issue with plastic consumption is disposal since it is bad for the envíronment and people's health. Therefore, in recent years, the packaging of food goods has made extensíve use of bio plastics based on starch it is easily obtainable, nontoxic, and has a high rate of biodegradability. This study examines the effect of powdered eggshell and banana peel loadings on physical (moisture content and water absorption) and mechanical (tensile strength, Young's modulus. and tearing resistance) qualities of the corn starch film. Solvent casting was the procedure used to prepare the films. The demonstration was conducted using several ratios of powdered eggshell and banana peel powder (0.1%, 0.2%.0.3%, 0.4% w/v of corn starch). The combination of these powders influences tensile and physical properties because of the strong C-H bonds found in eggshell powder, banana peel powder, and corn starch with a constant amount of glycerol (6ml) and tween 80 (3ml).To sum up, adding more eggshell and banana peel powder to cornstarch films improves their properties.

No. of Pages : 5 No. of Claims : 3

(12) PATENT APPLICATION PUBLICATION
(21) Application No.202441037654 A
(19) INDIA
(22) Date of filing of Application :13/05/2024
(43) Publication Date : 14/11/2025

(54) Title of the invention : OPTIMIZING COIR WASTE COMPOSTING WITH ORGANIC AND INORGANIC NITROGEN SOURCE

(51) International classification	:C05F0003000000, C05F0011000000, C05F0003060000, C05F0017500000, C05F0017000000
(31) Priority Document No	:NA
(32) Priority Date	:NA
(33) Name of priority country	:NA
(86) International Application No	:NA
Filing Date	:NA
(87) International Publication No	: NA
(61) Patent of Addition to Application Number	:NA
Filing Date	:NA
(62) Divisional to Application Number	:NA
Filing Date	:NA

(71)**Name of Applicant :**
1)Vasundhara Arul Murugesan
Address of Applicant :341, Andankovil Pudur Colony, Andankovil East, Andankovil Post, Manmangalam Taluk Tamil Nadu India
2)Dr.S.Sapthagiri
3)A.Dhanushya
4)A.Kiruthika
5)J.Saranya
6)B.Senthamilarasi
7)K.Mohan
8)S.Pramothkumar
9)K.Lavanya
10)M.Dineshkumar
(72)**Name of Inventor :**
1)Vasundhara Arul Murugesan
2)Dr.S.Sapthagiri
3)A.Dhanushya
4)A.Kiruthika
5)J.Saranya
6)B.Senthamilarasi
7)K.Mohan
8)S.Pramothkumar
9)K.Lavanya
10)M.Dineshkumar

(57) Abstract :
An experiment was carried out from January to April 2024 at the Sri Shanmugha College of Engineering and Technology, Sankari, Salem, to study the sustainable composting and making crafted pottery from various the coir wastes. This study investigates the potential of composting coir waste using different nitrogen sources, T1: 100% urea, T2: 50% urea + 50% poultry manure and T3: 100% poultry manure, to enhance the composting process and quality. The research evaluates the effects of these nitrogen sources on key composting parameters, including decomposition rates, temperature, pH, C/N ratio, microbial activity and nutrient content. Results demonstrate that incorporating poultry manure, either solely or in combination with urea, significantly accelerates the composting process compared to urea alone. T2 exhibits optimal decomposition rates and microbial activity, resulting in compost with balanced nutrient content and improved physical properties. Additionally, coir compost enriched with poultry manure enhances soil fertility and moisture retention, leading to enhanced crop growth and yield compared to urea-enriched or control compost. Economic analysis reveals the cost-effectiveness of utilizing poultry manure as a nitrogen source for coir waste composting, offering a sustainable alternative to traditional urea-based composting methods. Furthermore, the utilization of poultry manure aids in mitigating environmental pollution associated with its disposal while promoting nutrient recycling and soil health. This research underscores the significance of selecting appropriate nitrogen sources in coir waste composting to optimize resource utilization, minimize environmental impact and foster agricultural sustainability. Implementation of composting practices enriched with poultry manure holds promise for revitalizing coir waste management, contributing to the transition towards a circular economy and sustainable agricultural practices

No. of Pages : 6 No. of Claims : 4

(12) PATENT APPLICATION PUBLICATION
(21) Application No.202441037681 A
(19) INDIA
(22) Date of filing of Application :13/05/2024
(43) Publication Date : 14/11/2025

(54) Title of the invention : PROCESSOR MODULE INITIALIZATION BASED ON AUTHENTICATION KEY GENERATION AT A SECURITY MODULE

(51) International classification	:A61B0034300000, G06F0021570000, H04W0012041000, G06F0021730000, H04W0012060000	(71)**Name of Applicant :** **1)Hewlett Packard Enterprise Development LP** Address of Applicant :1701 East Mossy Oaks, Road Spring, Texas 77389 United States of America U.S.A.
(31) Priority Document No	:NA	(72)**Name of Inventor :** **1)Chandrasekhar Puthillathe**
(32) Priority Date	:NA	**2)Padma Lakshmi Anoop Kulkarni**
(33) Name of priority country	:NA	
(86) International Application No	:NA	
Filing Date	:NA	
(87) International Publication No	: NA	
(61) Patent of Addition to Application Number	:NA	
Filing Date	:NA	
(62) Divisional to Application Number	:NA	
Filing Date	:NA	

(57) Abstract :
In some examples, a first security module includes a connector interface to removably connect to a processor module. The first security module includes a controller that retrieves information stored at the processor module, the information set by a second security module when binding the second security module with the processor module. The controller reads a first authentication key from a memory of the first security module, and computes a second authentication key based on the information retrieved from the processor module. The controller determines whether to allow an initialization of the processor module based on the first authentication key and the second authentication key. [Figure 1]

No. of Pages : 42 No. of Claims : 20

(12) PATENT APPLICATION PUBLICATION
(19) INDIA
(22) Date of filing of Application :30/08/2024
(21) Application No.202444065797 A
(43) Publication Date : 14/11/2025

(54) Title of the invention : SWITCHBOARD PLATFORM FOR FOUNDATION MODELS

(51) International classification	:G06F30/13, H04L45/42
(31) Priority Document No	:18/659,180
(32) Priority Date	:09/05/2024
(33) Name of priority country	:U.S.A.
(86) International Application No	:NA
Filing Date	:NA
(87) International Publication No	: NA
(61) Patent of Addition to Application Number	:NA
Filing Date	:NA
(62) Divisional to Application Number	:NA
Filing Date	:NA

(71)**Name of Applicant :**
1)Accenture Global Solutions Limited
Address of Applicant :3 Grand Canal Plaza, Upper Grand Canal Street, Dublin, IRELAND 4 Ireland
(72)**Name of Inventor :**
1)Ray, Atish Shankar
2)Yamala, Sumanth
3)Wankhede, Paresh Mangesh
4)Raghavan, Anand Saranath Srinivasa
5)Achar, Sharath Haikadi Vasudeva
6)Okorafor, Ekpe
7)Guan, Lan
8)Zhang, Bo
9)Bistline, Stephen Randall
10)Habib, Niaz
11)Lapp, Mason De

(57) Abstract :
Implementations of the present disclosure provide receiving, by an intelligent router of the switchboard platform, a first request from an application, the first request including at least a portion of a prompt and a set of policy parameters, selecting, by the intelligent router, a foundation model of a sub-set of foundation models at least partially based on at least one policy parameter in the set of policy parameters, determining, from a model registry of the switchboard platform, connection data for the foundation model, transmitting, by the intelligent router and through a model connector of the switchboard platform, a second request for processing by the foundation model, the second request being transmitted using the connection data and including at least a portion of the prompt, receiving, by the intelligent router, a response from the foundation model, and transmitting the response to the application.

No. of Pages : 29 No. of Claims : 14

(12) PATENT APPLICATION PUBLICATION
(21) Application No.202444095472 A
(19) INDIA
(22) Date of filing of Application :04/12/2024
(43) Publication Date : 14/11/2025

(54) Title of the invention : DEVICE FOR GENERATING A WARNING LIGHT INDICATING A DOOR IS ABOUT TO OPEN

(51) International classification	:B60Q0001260000, B60R0001120000, B60R0001060000, G11C0007100000, E05B0081140000
(31) Priority Document No	:113117083
(32) Priority Date	:08/05/2024
(33) Name of priority country	:Taiwan
(86) International Application No	:NA
Filing Date	:NA
(87) International Publication No	: NA
(61) Patent of Addition to Application Number	:NA
Filing Date	:NA
(62) Divisional to Application Number	:NA
Filing Date	:NA

(71)**Name of Applicant :**
1)HON YU AUTO PARTS CO., LTD.
Address of Applicant :No. 329-2, Fude 2nd Road, Xizhi District, New Taipei City 22152, Taiwan (R.O.C) Taiwan
(72)**Name of Inventor :**
1)HSIAO Yin-Teng
2)LIN Chien-Fu

(57) Abstract :
A device for generating a warning light (C) indicating that a door of a vehicle (A) is about to open includes a warning module 3 and a sensing module 4. The vehicle (A) includes a side-view mirror module 1 mounted on a side of the vehicle (A) and a door latch module 21 operable to open the door. The warning module 3 is mounted on the side-view mirror module 1 and includes a light-emitting element 30 and an activation signal receiver 33. The light-emitting element 30 generates a warning light (C) when activated. The activation signal receiver 33 is connected to the light-emitting element 30 and receives an activation signal and activates the light-emitting element 30 in response to the activation signal received thereby. The sensing module 4 is mounted on the door latch module 21, detects whether a finger (B) of a person is within a predetermined sensing range, and generates the activation signal when it is detected that the finger (B) is within the predetermined range.

No. of Pages : 19 No. of Claims : 16

(12) PATENT APPLICATION PUBLICATION
(21) Application No.202544006331 A
(19) INDIA
(22) Date of filing of Application :25/01/2025
(43) Publication Date : 14/11/2025

(54) Title of the invention : TRUCK IGNITION STARTING APPARATUS

(51) International classification	:H02J7/00, B60R16/03, B60R16/033, G01R19/00
(31) Priority Document No	:202420972177.7
(32) Priority Date	:07/05/2024
(33) Name of priority country	:China
(86) International Application No	:NA
Filing Date	:NA
(87) International Publication No	: NA
(61) Patent of Addition to Application Number	:NA
Filing Date	:NA
(62) Divisional to Application Number	:NA
Filing Date	:NA

(71)**Name of Applicant :**
1)Shenzhen Mingtang New Energy Technology Co., Ltd.
Address of Applicant :1501 Dazu Technology Center, No. 9988 Shennan Avenue, Maling Community, Yuehai Street, Nanshan District, Shenzhen City, Guangdong Province, China-518000 China
(72)**Name of Inventor :**
1)Wujun Zeng
2)Yingjun Diao
3)Mingxiang Luo
4)Zhiru Li
5)Jun Wang

(57) Abstract :
TRUCK IGNITION STARTING APPARATUS The present invention belongs to the field of circuit protection technology and relates to a truck ignition starting apparatus, including: a shunt resistor R1, a current detection module, a discharging MOS module, a current-limiting charging module, a charging MOS module, an AFE control chip, an MCU control chip, a battery positive and negative output module, and an external capacitor module. The AFE control chip is connected to a positive terminal of a cell, the current detection module, the discharging MOS module, the charging MOS module, and the MCU control chip separately, the current detection module is also connected to the shunt resistor, the discharging MOS module is also connected to the shunt resistor, the charging MOS module, and the current-limiting charging module separately, the current-limiting charging module is also connected to the battery positive and negative output module, and the battery positive and negative output module is also connected to the external capacitor module. A current-limiting charging part and an external large capacitor are added, and the current-limiting part can limit a magnitude of a charging current when a cell is at high voltage, thereby protecting the cell. Figure of Abstract: FIG. 1.

No. of Pages : 20 No. of Claims : 10

(12) PATENT APPLICATION PUBLICATION
(21) Application No.202544033961 A
(19) INDIA
(22) Date of filing of Application :07/04/2025
(43) Publication Date : 14/11/2025

(54) Title of the invention : MONITORING FOR POSITIONING USING POSITIONING REFERENCE SIGNAL RESOURCE CONFIGURATION

(51) International classification	:H04W0064000000, H04L0005000000, G01S0005020000, H04W0004020000, G01S0005000000
(31) Priority Document No	:202441036198
(32) Priority Date	:07/05/2024
(33) Name of priority country	:India
(86) International Application No	:NA
Filing Date	:NA
(87) International Publication No	: NA
(61) Patent of Addition to Application Number	:NA
Filing Date	:NA
(62) Divisional to Application Number	:NA
Filing Date	:NA

(71)**Name of Applicant :**
1)Nokia Technologies Oy
Address of Applicant :Karakaari 7, 02610 Espoo, Finland Finland
(72)**Name of Inventor :**
1)Ganesh VENKATRAMAN
2)Muhammad Ikram ASHRAF
3)Satya Krishna JOSHI
4)Deepa MALAPATI RAVINDRAIAH

(57) Abstract :
ABSTRACT MONITORING FOR POSITIONING USING POSITIONING REFERENCE SIGNAL RESOURCE CONFIGURATION Example embodiments of the present disclosure are directed to the monitoring for positioning using positioning reference signal (PRS) resource configuration. A method comprises receiving, at a user equipment (UE), PRSs from a reference transmission reception point (TRP) and at least two neighbor TRPs; receiving, from the reference TRP and the at least two neighbor TRPs, phase-shifted-PRSs associated with respective phase offsets that are configured by a location management function (LMF) based on a reference hypothetical user equipment location for the reference TRP and the at least two neighbor TRPs; performing measurements on the PRSs and the phase-shifted-PRSs, respectively; and causing a positioning functionality of the UE to be validated by the UE or by the LMF at least based on results of the measurements and the reference hypothetical user equipment location. [FIG. 7]

No. of Pages : 42 No. of Claims : 10

(12) PATENT APPLICATION PUBLICATION
(21) Application No.202544037375 A
(19) INDIA
(22) Date of filing of Application :17/04/2025
(43) Publication Date : 14/11/2025

(54) Title of the invention : METHODS, APPARATUS, AND COMPUTER PROGRAMS FOR SELECTIVELY UTILIZING DIGITAL PRE-DISTORTION COMMUNICATION NETWORK

(51) International classification	:H03F0001320000, H04W0072230000, H04L0005000000, H04W0072542000, H04L0027260000	(71)**Name of Applicant :** **1)Nokia Technologies Oy** Address of Applicant :Karakaari 7, 02610 Espoo, Finland Finland (72)**Name of Inventor :** **1)Feridoon JALILI** **2)Oana-Elena BARBU** **3)Martin Hedegaard NIELSEN**
(31) Priority Document No	:2406379.4	
(32) Priority Date	:08/05/2024	
(33) Name of priority country	:U.K.	
(86) International Application No	:NA	
Filing Date	:NA	
(87) International Publication No	: NA	
(61) Patent of Addition to Application Number	:NA	
Filing Date	:NA	
(62) Divisional to Application Number	:NA	
Filing Date	:NA	

(57) Abstract :
ABSTRACT METHODS, APPARATUS, AND COMPUTER PROGRAMS FOR SELECTIVELY UTILIZING DIGITAL PRE-DISTORTION IN A COMMUNICATION NETWORK This specification describes methods, apparatus, and/or computer programs for selectively utilizing digital pre-distortion in a communication network. According to a first aspect of this specification, there is described a user device comprising: means for transmitting an uplink reference signal to a network device without using digital pre-distortion; means for receiving, from a network device, an indication indicating whether digital pre-distortion is enabled or disabled for performance, by the user device, of subsequent uplink transmissions, wherein the transmitted uplink reference signal is useable for determination of the indication; and means for, when the indication indicates that digital pre-distortion is enabled for performance of subsequent uplink transmissions, performing one or more uplink transmissions using digital pre-distortion, and when the indication indicates that digital pre-distortion is disabled for performance of subsequent uplink transmissions, performing one or more uplink transmissions without using digital pre-distortion. FIG. 6

No. of Pages : 58 No. of Claims : 12

(12) PATENT APPLICATION PUBLICATION
(21) Application No.202544037376 A
(19) INDIA
(22) Date of filing of Application :17/04/2025
(43) Publication Date : 14/11/2025

(54) Title of the invention : METHODS, APPARATUS, AND COMPUTER PROGRAMS FOR SELECTIVELY UTILIZING DIGITAL PRE-DISTORTION COMMUNICATION NETWORK

(51) International classification	:H03F0001320000, H04W0072230000, H04L0005000000, H04W0072542000, H04L0027260000	(71)**Name of Applicant :** **1)Nokia Technologies Oy** Address of Applicant :Karakaari 7, 02610 Espoo, Finland Finland (72)**Name of Inventor :** **1)Feridoon JALILI** **2)Oana-Elena BARBU** **3)Martin Hedegaard NIELSEN**
(31) Priority Document No	:2406380.2	
(32) Priority Date	:08/05/2024	
(33) Name of priority country	:U.K.	
(86) International Application No	:NA	
Filing Date	:NA	
(87) International Publication No	: NA	
(61) Patent of Addition to Application Number	:NA	
Filing Date	:NA	
(62) Divisional to Application Number	:NA	
Filing Date	:NA	

(57) Abstract :
ABSTRACT METHODS, APPARATUS, AND COMPUTER PROGRAMS FOR SELECTIVELY UTILIZING DIGITAL PRE-DISTORTION IN A COMMUNICATION NETWORK This specification describes methods, apparatus, and/or computer programs for selectively utilizing digital pre-distortion in a communication network. According to a first aspect of this specification, there is described a user device comprising: means for transmitting an uplink reference signal to a network device without using digital pre-distortion; means for receiving, from a network device, an indication indicating whether digital pre-distortion is enabled or disabled for performance, by the user device, of subsequent uplink transmissions, wherein the transmitted uplink reference signal is useable for determination of the indication; and means for, when the indication indicates that digital pre-distortion is enabled for performance of subsequent uplink transmissions, performing one or more uplink transmissions using digital pre-distortion, and when the indication indicates that digital pre-distortion is disabled for performance of subsequent uplink transmissions, performing one or more uplink transmissions without using digital pre-distortion. FIG. 6

No. of Pages : 58 No. of Claims : 13

(12) PATENT APPLICATION PUBLICATION
(21) Application No.202544038609 A
(19) INDIA
(22) Date of filing of Application :22/04/2025
(43) Publication Date : 14/11/2025

(54) Title of the invention : MAPPING OF DATA BLOCK TO ANTENNA PORT GROUP

(51) International classification	:H04B0007060000, H04L0005000000, H04W0088080000, H04B0007040400, G06F0016230000
(31) Priority Document No	:2406540.1
(32) Priority Date	:10/05/2024
(33) Name of priority country	:U.K.
(86) International Application No	:NA
Filing Date	:NA
(87) International Publication No	: NA
(61) Patent of Addition to Application Number	:NA
Filing Date	:NA
(62) Divisional to Application Number	:NA
Filing Date	:NA

(71)**Name of Applicant :**
1)Nokia Technologies Oy
Address of Applicant :Karakaari 7, 02610 Espoo, Finland Finland
(72)**Name of Inventor :**
1)Filippo TOSATO
2)Rana AHMED

(57) Abstract :
ABSTRACT MAPPING OF DATA BLOCK TO ANTENNA PORT GROUP Example embodiments of the present disclosure relate to apparatuses, methods and computer readable storage medium for mapping of a data block to an antenna port group. In a method, a target antenna port group is determined by a first apparatus or a second apparatus from the at least one antenna port group based on at least one association between at least one data block and at least one antenna port group. The target antenna port group is associated with a target data block from the at least one data block. The target data block is communicated between the first and second apparatuses based on the determining of the target antenna port group. (FIG. 4)

No. of Pages : 31 No. of Claims : 10

(12) PATENT APPLICATION PUBLICATION
(21) Application No.202544039232 A
(19) INDIA
(22) Date of filing of Application :23/04/2025
(43) Publication Date : 14/11/2025

(54) Title of the invention : INDICATING STATUS OF TIMER USED FOR UPLINK TRANSMISSION EXTENSION

(51) International classification	:H04W36/00, H04W56/00, H04W64/00
(31) Priority Document No	:PCT/CN2024/092448
(32) Priority Date	:10/05/2024
(33) Name of priority country	:PCT
(86) International Application No	:NA
Filing Date	:NA
(87) International Publication No	: NA
(61) Patent of Addition to Application Number	:NA
Filing Date	:NA
(62) Divisional to Application Number	:NA
Filing Date	:NA

(71)**Name of Applicant :**
1)Nokia Technologies Oy
Address of Applicant :Karakaari 7, 02610 Espoo, Finland Finland
(72)**Name of Inventor :**
1)Mads LAURIDSEN
2)Ping YUAN

(57) Abstract :
ABSTRACT INDICATING STATUS OF TIMER USED FOR UPLINK TRANSMISSION EXTENSION Disclosed is a method comprising determining a status of a timer used for uplink transmission extension of a user equipment whose global navigation satellite system validity duration has expired; and transmitting, to an access node controlling a target cell of a handover of the user equipment, information indicating the status of the timer of the user equipment.

No. of Pages : 52 No. of Claims : 14

(12) PATENT APPLICATION PUBLICATION
(21) Application No.202544039233 A
(19) INDIA
(22) Date of filing of Application :23/04/2025
(43) Publication Date : 14/11/2025

(54) Title of the invention : NETWORK ELEMENTS ADAPTED FOR SEAMLESS USER PLANE COMMUNICATION PATH RECOVERY

(51) International classification	:H04W0004060000, H04W0076400000, H04W0036000000, H04W0076120000, H04L0001220000
(31) Priority Document No	:63/644,904
(32) Priority Date	:09/05/2024
(33) Name of priority country	:U.S.A.
(86) International Application No	:NA
Filing Date	:NA
(87) International Publication No	: NA
(61) Patent of Addition to Application Number	:NA
Filing Date	:NA
(62) Divisional to Application Number	:NA
Filing Date	:NA

(71)**Name of Applicant :**
1)Nokia Technologies Oy
Address of Applicant :Karakaari 7, 02610 Espoo, Finland Finland
(72)**Name of Inventor :**
1)Philippe GODIN
2)Bruno LANDAIS
3)Laurent THIÉBAUT

(57) Abstract :
ABSTRACT NETWORK ELEMENTS ADAPTED FOR SEAMLESS USER PLANE COMMUNICATION PATH RECOVERY A method of a multicast broadcast session management function (MB-SMF) of a communication network comprising: transmitting, to a radio access network (RAN) node, a request to setup a broadcast session for a multicast broadcast service (MBS) in the RAN node; receiving, from the RAN node, a response to the request to setup the broadcast session, the response including a transport layer address of the RAN node for use in setting up a user plane communication path between the RAN node and a multicast broadcast user plane function (MB-UPF) for the broadcast session; receiving, from the RAN node, an indication that the RAN node supports a seamless user plane communication path recovery process; transferring the transport layer address of the RAN node to the MB-UPF to enable setup of the user plane communication path; receiving a notification from the MB-UPF indicative of failure of the user plane communication path; and sending, to the RAN node, a request to initiate the seamless user plane communication path recovery process and maintain the broadcast session.

No. of Pages : 26 No. of Claims : 9

(12) PATENT APPLICATION PUBLICATION
(21) Application No.202544039717 A
(19) INDIA
(22) Date of filing of Application :25/04/2025
(43) Publication Date : 14/11/2025

(54) Title of the invention : AN ELECTRIC VEHICLE ACTIVE DISCHARGE HARDWARE LOGIC PROTECTION CIRCUIT

(51) International classification	:H02J0007000000, H02H0011000000, H01L0027020000, G01K0003140000, H02H0007180000
(31) Priority Document No	:202410578710.6
(32) Priority Date	:11/05/2024
(33) Name of priority country	:China
(86) International Application No	:NA
Filing Date	:NA
(87) International Publication No	: NA
(61) Patent of Addition to Application Number	:NA
Filing Date	:NA
(62) Divisional to Application Number	:NA
Filing Date	:NA

(71)**Name of Applicant :**
1)VALEO POWER TECHNOLOGY (NANJING)CO., LTD.
Address of Applicant :Building 1-B, No. 88 Guangli Road, Jiangning Economic and Technology Development Zone, Nanjing, Jiangsu 211153, CHINA. Nanjing China
(72)**Name of Inventor :**
1)Hailong ZHOU
2)Nan WU
3)Jiangbo DING
4)Jiafeng ZHANG
5)Qingfeng CHEN
6)Xiaobin HU

(57) Abstract :
DISCHARGE PROTECTION CIRCUIT, ELECTRONIC DEVICE AND VEHICLE The present disclosure relates to a discharge protection circuit that includes a control circuit with an output terminal, a first input terminal, a second input terminal and a third input terminal. The output terminal connects to a discharge circuit, outputting a control signal to for discharge. A time-out switch-off circuit detects if a bus voltage of the discharge circuit is lower than a reference voltage when discharge has been performed for a predetermined time, and output a first electrical signal; an overcurrent latching circuit, wherein the overcurrent latching circuit is configured to detect whether overcurrent has occurred in the discharge circuit, and output a second electrical signal; the first input terminal and second input terminal of the control circuit respectively receive the first electrical signal and the second electrical signal, and the third input terminal of the control circuit receives a discharge enable signal. Figure for the abstract Fig .1

No. of Pages : 29 No. of Claims : 16

(12) PATENT APPLICATION PUBLICATION
(19) INDIA
(22) Date of filing of Application :25/04/2025
(21) Application No.202544039776 A
(43) Publication Date : 14/11/2025

(54) Title of the invention : YARN WINDING APPARATUS

(51) International classification	:B65H0061000000, D03D0047360000, D04B0015480000, D02G0003400000, B65H0063024000
(31) Priority Document No	:2024-078222
(32) Priority Date	:13/05/2024
(33) Name of priority country	:India
(86) International Application No	:NA
Filing Date	:NA
(87) International Publication No	: NA
(61) Patent of Addition to Application Number	:NA
Filing Date	:NA
(62) Divisional to Application Number	:NA
Filing Date	:NA

(71)**Name of Applicant :**
1)MURATA MACHINERY, LTD.
Address of Applicant :3, Minami Ochiai-cho, Kisshoin, Minami-ku, Kyoto-shi, Kyoto 601-8326, Japan Japan
(72)**Name of Inventor :**
1)JINYAMA, Tatsuo

(57) Abstract :
ABSTRACT YARN WINDING APPARATUS A winder unit 2 includes a yarn feeding unit 6, a package forming unit 8, and a control device 25. The yarn feeding unit 6 feeds yarn Y. The package forming unit 8 winds the yarn Y to form a package 30. The control device 25 controls the package forming unit 8. The control device 25 performs deceleration stop control on the package forming unit 8, for decelerating a yarn speed of the yarn Y from a yarn speed during formation of the package 30, to be zero when a length of the yarn Y wound on the package 30 becomes a package winding end length. In this case, start timing of the deceleration stop control is determined based on the package winding end length, the yarn speed during formation of the package 30, and the length of the yarn wound on the package 30. Most Illustrative Drawing: FIG. 6

No. of Pages : 42 No. of Claims : 10

(12) PATENT APPLICATION PUBLICATION
(21) Application No.202544042173 A
(19) INDIA
(22) Date of filing of Application :01/05/2025
(43) Publication Date : 14/11/2025

(54) Title of the invention : PDCP SN GAP REPORT AND STATE VARIABLE RX_NEXT

(51) International classification	:H04L0001160700, H04W0028020000, H04W0028060000, H04L0047340000, H04L0009400000
(31) Priority Document No	:2406399.2
(32) Priority Date	:08/05/2024
(33) Name of priority country	:U.K.
(86) International Application No	:NA
Filing Date	:NA
(87) International Publication No	: NA
(61) Patent of Addition to Application Number	:NA
Filing Date	:NA
(62) Divisional to Application Number	:NA
Filing Date	:NA

(71)**Name of Applicant :**
1)NOKIA TECHNOLOGIES OY
Address of Applicant :Karakaari 7, 02610 Espoo, Finland Finland
(72)**Name of Inventor :**
1)KOSKINEN, Henri Markus

(57) Abstract :
A method, apparatus, and computer program product are provided. In the context of a method, the method includes receiving (302) from another PDCP entity (the other of 110/112), a message indicating at least one sequence number. The method further includes, based on the at least one sequence number, updating (304) a first state variable, wherein the first state variable indicates an expected sequence number of a next expected service data unit (SDU) to be received, and wherein the updating of the first state variable comprises increasing the first state variable to a lowest sequence number that is higher than a reference value and is associated with an SDU not considered as discarded.

No. of Pages : 29 No. of Claims : 12

(12) PATENT APPLICATION PUBLICATION
(21) Application No.202544042174 A
(19) INDIA
(22) Date of filing of Application :01/05/2025
(43) Publication Date : 14/11/2025

(54) Title of the invention : CW POWER, FREQUENCY AND BEAM CONTROL FOR AMBIENT IOT

(51) International classification	:H04L0067120000, H04L0027260000, G06K0019070000, H04W0004700000, H04W0048020000	(71)**Name of Applicant :** **1)NOKIA TECHNOLOGIES OY** Address of Applicant :Karakaari 7, 02610 Espoo, Finland Finland (72)**Name of Inventor :** **1)KIILERICH PRATAS, Nuno Manuel** **2)BARBU, Oana-Elena** **3)VEJLGAARD, Benny** **4)HARREBEK, Johannes** **5)SVENDSEN, Simon**
(31) Priority Document No	:2406640.9	
(32) Priority Date	:10/05/2024	
(33) Name of priority country	:U.K.	
(86) International Application No	:NA	
Filing Date	:NA	
(87) International Publication No	: NA	
(61) Patent of Addition to Application Number	:NA	
Filing Date	:NA	
(62) Divisional to Application Number	:NA	
Filing Date	:NA	

(57) Abstract :
An apparatus and a method is provided by a carrier wave provider is associated with an ambient internet of things session, wherein the carrier wave provider is a network node configured to transmit a carrier wave, and the ambient internet of things session involves an ambient internet of things device being a network node configured to receive the carrier wave and manipulate the carrier wave transmitted by the carrier wave provider, and notification information is provided to at least one network node involved in the ambient internet of things session, wherein the notification information indicates how to interact with the associated carrier wave provider for transmitting control information to the associated carrier wave provider. [Fig. 1B]

No. of Pages : 54 No. of Claims : 16

(12) PATENT APPLICATION PUBLICATION
(21) Application No.202544042278 A
(19) INDIA
(22) Date of filing of Application :01/05/2025
(43) Publication Date : 14/11/2025

(54) Title of the invention : CW POWER, FREQUENCY AND BEAM CONTROL FOR AMBIENT IOT

(51) International classification	:G06K0019070000, H04M0015000000, H04L0067120000, H04L0012120000, H04W0052360000
(31) Priority Document No	:2406649.0
(32) Priority Date	:10/05/2024
(33) Name of priority country	:U.K.
(86) International Application No	:NA
Filing Date	:NA
(87) International Publication No	: NA
(61) Patent of Addition to Application Number	:NA
Filing Date	:NA
(62) Divisional to Application Number	:NA
Filing Date	:NA

(71)**Name of Applicant :**
1)NOKIA TECHNOLOGIES OY
Address of Applicant :Karakaari 7, 02610 Espoo, Finland Finland
(72)**Name of Inventor :**
1)KIILERICH PRATAS, Nuno Manuel
2)BARBU, Oana-Elena
3)VEJLGAARD, Benny
4)HARREBEK, Johannes
5)SVENDSEN, Simon

(57) Abstract :
An apparatus is provided which comprises at least one processor, and at least one memory storing instructions that, when executed by the at least one processor, cause the apparatus at least to: transmit a carrier wave for an ambient internet of things session involving an ambient internet of things device being a network node configured to receive the carrier wave and manipulate the carrier wave, receive a request for controlling at least one carrier wave transmission characteristic such that the at least one carrier wave transmission characteristic is changed, and control the at least one carrier wave transmission characteristic based on the received request.
[Fig. 2B]

No. of Pages : 53 No. of Claims : 10

(12) PATENT APPLICATION PUBLICATION
(21) Application No.202544042279 A
(19) INDIA
(22) Date of filing of Application :01/05/2025
(43) Publication Date : 14/11/2025

(54) Title of the invention : USER EQUIPMENT INITIATED BEAM REPORTING

(51) International classification	:H04W72/04, H04W24/10, H04W76/27, H04B7/06, H04W16/28	
(31) Priority Document No	:2406327.3	
(32) Priority Date	:07/05/2024	
(33) Name of priority country	:U.K.	
(86) International Application No	:NA	
Filing Date	:NA	
(87) International Publication No	: NA	
(61) Patent of Addition to Application Number	:NA	
Filing Date	:NA	
(62) Divisional to Application Number	:NA	
Filing Date	:NA	

(71)**Name of Applicant :**
1)NOKIA TECHNOLOGIES OY
Address of Applicant :Karakaari 7, 02610 Espoo, Finland Finland
(72)**Name of Inventor :**
1)CAPORAL DEL BARRIO, Samantha
2)HAKOLA, Sami-Jukka
3)KOSKELA, Timo

(57) Abstract :
According to an aspect, a user equipment may obtain, from a network node, two different resource sets for an uplink signal for an uplink procedure and a user equipment initi-ated beam reporting procedure. The user equipment may meas-ure beams to determine the best beam. The user equipment may identify a concurrent need to perform an uplink proce-dure transmission and a user equipment initiated beam report transmission, wherein the identifying comprises a determi-nation whether at least one condition for triggering the user equipment initiated beam report transmission is met. The user equipment may transmit the uplink signal at least in part based on the best beam, the identified need and the two different resource sets. (FIG. 6C)

No. of Pages : 51 No. of Claims : 15

(12) PATENT APPLICATION PUBLICATION
(21) Application No.202544043511 A
(19) INDIA
(22) Date of filing of Application :05/05/2025
(43) Publication Date : 14/11/2025

(54) Title of the invention : CW POWER, FREQUENCY AND BEAM CONTROL FOR AMBIENT IOT

(51) International classification	:F24F0110100000, G05B0015020000, H04L0067120000, H04L0009320000, H05B0047155000
(31) Priority Document No	:2406651.6
(32) Priority Date	:10/05/2024
(33) Name of priority country	:U.K.
(86) International Application No	:NA
Filing Date	:NA
(87) International Publication No	: NA
(61) Patent of Addition to Application Number	:NA
Filing Date	:NA
(62) Divisional to Application Number	:NA
Filing Date	:NA

(71)**Name of Applicant :**
1)NOKIA TECHNOLOGIES OY
Address of Applicant :Karakaari 7, 02610 Espoo, Finland Finland
(72)**Name of Inventor :**
1)KIILERICH PRATAS, Nuno Manuel
2)BARBU, Oana-Elena
3)VEJLGAARD, Benny
4)HARREBEK, Johannes
5)SVENDSEN, Simon

(57) Abstract :
An apparatus is provided which comprises at least one processor, and at least one memory storing instructions that, when executed by the at least one processor, cause the apparatus at least to: obtain information, from a session control unit controlling a ambient internet of things session, which enables notifying the session control unit or a carrier wave provider involved in controlling the ambient internet of things session concerning a carrier wave transmission, and identifying the carrier wave transmission, and provide the obtained information to at least one network node, wherein the at least one network node is under control of said apparatus. [Fig. 4B]

No. of Pages : 54 No. of Claims : 12

(12) PATENT APPLICATION PUBLICATION
(21) Application No.202544043798 A
(19) INDIA
(22) Date of filing of Application :06/05/2025
(43) Publication Date : 14/11/2025

(54) Title of the invention : METHOD FOR MANUFACTURING UNSATURATED POLYESTER RESIN

(51) International classification	:C08G63/78, C08G63/16, C08G63/52
(31) Priority Document No	:202410560592.6
(32) Priority Date	:08/05/2024
(33) Name of priority country	:China
(86) International Application No	:NA
Filing Date	:NA
(87) International Publication No	: NA
(61) Patent of Addition to Application Number	:NA
Filing Date	:NA
(62) Divisional to Application Number	:NA
Filing Date	:NA

(71)**Name of Applicant :**
1)SWANCOR INNOVATION & INCUBATION CO., LTD.
Address of Applicant :3F., No. 11, Gongye S. 6th Rd., Nantou City, Nantou County 540028, Taiwan, R.O.C Taiwan
(72)**Name of Inventor :**
1)Yun-Wen HUANG
2)Meng-Wei WANG

(57) Abstract :
METHOD FOR MANUFACTURING UNSATURATED POLYESTER RESIN A method for manufacturing an unsaturated polyester resin (100) includes alcoholysis step, etherification step, condensation step and dilution step as follows. In alcoholysis step, a polycarbonate, a diol compound and an organic alkaline catalyst are mixed and heated to an alcoholysis temperature to obtain a first mixture. In etherification step, a carbonate compound is added to the first mixture to obtain a second mixture. In condensation step, a dianhydride or diacid monomer is added to the second mixture to obtain a third mixture. In dilution step, the third mixture is cooled to a dilution temperature, and a styrene or acrylic monomer is added to dilute it to a predetermined solid content to obtain an unsaturated polyester resin. The Relevant Figure: Fig. 1.

No. of Pages : 25 No. of Claims : 10

(12) PATENT APPLICATION PUBLICATION
(21) Application No.202544043813 A
(19) INDIA
(22) Date of filing of Application :06/05/2025
(43) Publication Date : 14/11/2025

(54) Title of the invention : AIR SUPPLY SYSTEM FOR A FILM STRETCHING UNIT

(51) International classification	:C02F0003000000, D01H0001115000, A61G0013100000, C10B0049020000, F24F0012000000
(31) Priority Document No	:10 2024 113 147.0
(32) Priority Date	:10/05/2024
(33) Name of priority country	:Germany
(86) International Application No	:NA
Filing Date	:NA
(87) International Publication No	: NA
(61) Patent of Addition to Application Number	:NA
Filing Date	:NA
(62) Divisional to Application Number	:NA
Filing Date	:NA

(71)**Name of Applicant :**
1)Brückner Maschinenbau GmbH
Address of Applicant :Königsberger Str. 5-7, 83313 Siegsdorf, Germany Germany
(72)**Name of Inventor :**
1)HÄUSL, Tobias
2)STENGEL, Elena

(57) Abstract :
The present invention relates to an air supply system 2 for a stretching unit 1. The air supply system 2 comprises at least one air supply unit 100, at least one fresh-air supply unit 102 and at least one exhaust-air return unit 106. The exhaust-air return unit 106 and the fresh-air supply unit 102 are assigned to a mutual first treatment zone 26c, wherein the fresh-air supply unit 102 is configured to supply fresh air 300 as supply air 310 to the first treatment zone. The exhaust-air return unit 106 is configured to extract exhaust air 200 from the first treatment zone 26c and to supply at least a proportion 210, 212 of the exhaust air 200 to at least one air supply unit 100. The air supply unit 100 is assigned to a second treatment zone which is upstream of the first treatment zone 26c. The air supply unit 100 is configured to provide the proportion 210, 211 of the exhaust air returned by the exhaust-air return unit 106 to the second treatment zone 26a, 26b as supply air 310. [Fig. 2]

No. of Pages : 30 No. of Claims : 15

(12) PATENT APPLICATION PUBLICATION
(21) Application No.202544043920 A
(19) INDIA
(22) Date of filing of Application :06/05/2025
(43) Publication Date : 14/11/2025

(54) Title of the invention : BEHAVIOR OF UPLINK TRANSMISSION EXTENSION TIMER FOR CONNECTED-MODE DISCONTINUOUS RECEPTION NON-ACTIVE PERIOD

(51) International classification	:H04W0076280000, H04W0024100000, H04W0076270000, H04W0052020000, H04W0074080000	(71)**Name of Applicant :** **1)NOKIA TECHNOLOGIES OY** Address of Applicant :Karakaari 7, 02610 Espoo, Finland Finland (72)**Name of Inventor :** **1)LAURIDSEN, Mads** **2)YUAN, Ping**
(31) Priority Document No	:PCT/CN2024/092446	
(32) Priority Date	:10/05/2024	
(33) Name of priority country	:PCT	
(86) International Application No	:NA	
Filing Date	:NA	
(87) International Publication No	: NA	
(61) Patent of Addition to Application Number	:NA	
Filing Date	:NA	
(62) Divisional to Application Number	:NA	
Filing Date	:NA	

(57) Abstract :
Disclosed is a method comprising starting a timer for uplink transmission extension; performing a global navigation satellite system measurement during a connected-mode discontinuous reception non-active period; transmitting, to an access node of a radio access network, a report message indicating a remaining time of a global navigation satellite system validity duration after the global navigation satellite system measurement performed during the connected-mode discontinuous reception non-active period; determining whether the timer has expired before the access node has received the report message; and stopping the timer based on determining that the timer has not expired before the access node has received the report message; or refraining from initiating an autonomous global navigation satellite system measurement associated with the timer or refraining from leaving a radio resource control connected mode, based on determining that the timer has expired before the access node has received the report message. FIG. 5

No. of Pages : 52 No. of Claims : 12

(12) PATENT APPLICATION PUBLICATION
(19) INDIA
(22) Date of filing of Application :06/05/2025
(21) Application No.202544043991 A
(43) Publication Date : 14/11/2025

(54) Title of the invention : IMPELLER

(51) International classification	:F04D0029280000, F04D0025060000, F04D0029320000, A61M0005280000, G05G0001440000
(31) Priority Document No	:2024-077363
(32) Priority Date	:10/05/2024
(33) Name of priority country	:Japan
(86) International Application No	:NA
Filing Date	:NA
(87) International Publication No	: NA
(61) Patent of Addition to Application Number	:NA
Filing Date	:NA
(62) Divisional to Application Number	:NA
Filing Date	:NA

(71)**Name of Applicant :**
1)CARRIER JAPAN CORPORATION
Address of Applicant :1-11-1, Osaki, Shinagawa-ku, Tokyo 141-0032, Japan Japan
(72)**Name of Inventor :**
1)SAITO Soki
2)OKURA Kazuya
3)ENDO Masayuki
4)TABATA Yoshiki
5)KOMIYAMA Yoshihiro

(57) Abstract :
An impeller 1 includes: a hub portion 3 including an outer peripheral surface 3o; and a plurality of blade 5 portions 5 connected to the outer peripheral surface 3o of the hub portion 3. The hub portion 3 includes: a cylindrical portion 11 including the outer peripheral surface 3o of the hub portion 3 and an inner peripheral surface 11i; a boss portion 13 for insertion of an output 10 shaft of an electric motor, the boss portion 13 having a cylindrical shape and being disposed at the center of the cylindrical portion 11; and a connecting portion 15 having a corrugated-plate shape and connecting the inner peripheral surface 11i of the cylindrical portion 11 and 15 an outer peripheral surface 13o of the boss portion 13. Figure 2

No. of Pages : 62 No. of Claims : 8

(12) PATENT APPLICATION PUBLICATION
(21) Application No.202544044289 A
(19) INDIA
(22) Date of filing of Application :07/05/2025
(43) Publication Date : 14/11/2025

(54) Title of the invention : THE UTILITY MODEL RELATES TO AN APPARATUS FOR MELT SPINNING AND COOLING

(51) International classification	:D01D0005092000, D21F0007000000, A61M0016000000, D01D0005080000, H05K0007200000
(31) Priority Document No	:202420991610.1
(32) Priority Date	:09/05/2024
(33) Name of priority country	:China
(86) International Application No	:NA
Filing Date	:NA
(87) International Publication No	: NA
(61) Patent of Addition to Application Number	:NA
Filing Date	:NA
(62) Divisional to Application Number	:NA
Filing Date	:NA

(71)**Name of Applicant :**
1)Oerlikon Textile GmbH & Co. KG
Address of Applicant :Leverkuser Strasse 65, 42897 Remscheid, Germany Germany
(72)**Name of Inventor :**
1)Zuoxian Zhao
2)YE Zhonghui

(57) Abstract :
Present utility model relates to an apparatus for melt spinning and cooling, comprising a blower box and a plurality of spinnerets, the blower box being connected to a compressed air source and having a cooling cylinder inside the blower box which forms a plurality of inlet apertures on the top side thereof, respectively, the apparatus further comprising a connection joint, which is held in a pressure-tight manner with respect to the blower box and the spinning beam and has at least one exhaust gas opening for exhaust gas evacuation at passageway for each spinneret, the apparatus further comprising a suction hood having a suction opening connected to an suction device, the exhaust gas outlet and the suction opening being opposite and distanced from each other, space between the exhaust gas outlet and the suction opening being partially closed and having a gas inlet opening with an adjustable opening. Since coarse denier filaments and fine denier filaments are affected to a different extent by other airflows in addition to cooling airflow, especially for coarse denier filaments which are resistant to airflow interference, the suction airflow has a relatively weak negative effect, and the suction airflow onto the filament can be adjusted to achieve an auxiliary cooling effect while maintaining a negative impact as low as possible onto the filament

No. of Pages : 21 No. of Claims : 5

(12) PATENT APPLICATION PUBLICATION
(21) Application No.202544044547 A
(19) INDIA
(22) Date of filing of Application :08/05/2025
(43) Publication Date : 14/11/2025

(54) Title of the invention : CONTACT ARRANGEMENT FOR AN ELECTRICAL SWITCHING DEVICE AND ELECTRICAL SWITCHING DEVICE

(51) International classification	:H01H0001200000, H01H0050540000, H01H0009360000, H01H0009340000, H02K0003500000
(31) Priority Document No	:10 2024 113 294.9
(32) Priority Date	:13/05/2024
(33) Name of priority country	:Germany
(86) International Application No	:NA
Filing Date	:NA
(87) International Publication No	: NA
(61) Patent of Addition to Application Number	:NA
Filing Date	:NA
(62) Divisional to Application Number	:NA
Filing Date	:NA

(71)**Name of Applicant :**
1)TE Connectivity Solutions GmbH
Address of Applicant :Mühlenstrasse 26, 8200 Schaffhausen, Switzerland Switzerland
(72)**Name of Inventor :**
1)KROEKER, Matthias

(57) Abstract :
The present invention relates to a contact arrangement (100, 200, 300, 400) for an electrical switching device. The contact arrangement (100, 200, 300, 400) comprises two fixed contacts (102, 302, 402) and an electrically conductive contact bridge (104) which can be moved along a switching direction (118). The two fixed contacts (102, 302, 402) each have at least one first leg (122, 322, 422) and one second leg (124, 324, 424), wherein the two fixed contacts (102, 302, 402) are each connected to an outer surface (128, 328, 428) of the second leg (124, 324, 424), which is located on an outer side of a projection volume spanned by the first leg (122, 322, 422) and by the second leg (124, 324, 424) and can be electrically contacted by at least one switching contact element (112) of the contact bridge (104). Furthermore, the present disclosure relates to an electrical switching device with such a contact arrangement (100, 200, 300, 400). FIGURE 1

No. of Pages : 41 No. of Claims : 17

(12) PATENT APPLICATION PUBLICATION
(21) Application No.202544044562 A
(19) INDIA
(22) Date of filing of Application :08/05/2025
(43) Publication Date : 14/11/2025

(54) Title of the invention : TRAINING DATA COLLECTION

(51) International classification	:H04L0001000000, H04L0001186700, H04L0001080000, H04L0001182900, H04W0024080000
(31) Priority Document No	:20245601
(32) Priority Date	:13/05/2024
(33) Name of priority country	:Finland
(86) International Application No	:NA
Filing Date	:NA
(87) International Publication No	: NA
(61) Patent of Addition to Application Number	:NA
Filing Date	:NA
(62) Divisional to Application Number	:NA
Filing Date	:NA

(71)**Name of Applicant :**
1)NOKIA TECHNOLOGIES OY
Address of Applicant :Karakaari 7, 02610 Espoo, Finland Finland
(72)**Name of Inventor :**
1)KORPI, Dani Johannes
2)VEIJALAINEN, Teemu Mikael
3)KELA, Kalle Petteri

(57) Abstract :
According to examples of the disclosure there is provided an apparatus (10, 110) comprising: means (11, 15) for receiving, from a second apparatus (120), 5 configuration information (302) for configuring the apparatus to retransmit, to the second apparatus, at least one bit (303) that has been successfully transmitted by the apparatus to the second apparatus using a first set of one or more transmission parameters (304), wherein the retransmission of the at least one successfully transmitted bit is to be performed using a second set of one or more transmission 10 parameters (305) different to the first set of one or more transmission parameters; and means for retransmitting (11, 15) the at least one successfully transmitted bit to the second apparatus, wherein the retransmission is based at least in part on the configuration information.

No. of Pages : 52 No. of Claims : 13

(12) PATENT APPLICATION PUBLICATION
(21) Application No.202544044564 A
(19) INDIA
(22) Date of filing of Application :08/05/2025
(43) Publication Date : 14/11/2025

(54) Title of the invention : APPARATUS AND METHOD FOR A NETWORK DEVICE

(51) International classification	:H04L0005000000, H04B0007041300, G07F0017000000, H04W0076280000, H04W0084060000
(31) Priority Document No	:20245586
(32) Priority Date	:10/05/2024
(33) Name of priority country	:Finland
(86) International Application No	:NA
Filing Date	:NA
(87) International Publication No	: NA
(61) Patent of Addition to Application Number	:NA
Filing Date	:NA
(62) Divisional to Application Number	:NA
Filing Date	:NA

(71)**Name of Applicant :**
1)Nokia Solutions and Networks Oy
Address of Applicant :Karakaari 7, 02610 Espoo, Finland Finland
(72)**Name of Inventor :**
1)BHAGAVATHULA ANANTHA GOPALA, Ravi Sharan
2)MANDELLI, Silvio

(57) Abstract :
An apparatus for a network device, the apparatus comprising at least one processor, and at least one memory storing instructions that, when executed by the at least one processor, cause the network device to: determine an expected radio resource demand, perform, at least based on the expected radio resource demand, at least one of a) a micro discontinuous transmission technique, or b) a multiple input multiple output, MIMO, muting technique, or c) a power-domain decision.

No. of Pages : 45 No. of Claims : 15

(12) PATENT APPLICATION PUBLICATION

(21) Application No.202547077485 A

(19) INDIA

(22) Date of filing of Application :14/08/2025

(43) Publication Date : 14/11/2025

(54) Title of the invention : BONDED SEAM, METHOD, AND DEVICE FOR JOINING MATERIAL WEBS OR MATERIAL SHEETS BY MEANS OF A THERMALLY ACTIVATABLE ADHESIVE, AND USE OF AN IMPACT PRESS

(51) International classification	:B29C 65/00, B29C 65/02, B29C 65/38, B29C 65/48
(31) Priority Document No	:10 2023 100 891.9
(32) Priority Date	:16/01/2023
(33) Name of priority country	:Germany
(86) International Application No	:PCT/DE2024/100022
Filing Date	:12/01/2024
(87) International Publication No	:WO 2024/153293
(61) Patent of Addition to Application Number	:NA
Filing Date	:NA
(62) Divisional to Application Number	:NA
Filing Date	:NA

(71)**Name of Applicant :**

1)FRAUNHOFER-GESELLSCHAFT ZUR FÖRDERUNG DER ANGEWANDTEN FORSCHUNG EINGETRAGENER VEREIN

Address of Applicant :Hansastr. 27c 80686 München Germany

(72)**Name of Inventor :**

1)KOTT, Mathias

(57) Abstract :

The invention relates to a bonded seam, a method, and a device for joining material webs (10) by means of a thermally activatable adhesive, in particular a hot-melt adhesive (11), wherein the material webs (10) are joined between impact elements (2, 4) along a bonded seam (12). According to the invention, an impact pulse is applied to the material webs or material sheets (10) which are arranged one above the other between a pair of unheated impact elements (2, 4) and between which the adhesive (11) is located. By means of this process, the bonded seam (12) is formed by the impact pulse penetrating at least in part into the adhesive (11) and the adhesive being activated thereby, with the activation being limited to the region where the bonded seam (12) extends, and with a resulting height of the bonded seam (12) which is lower than the height of both material webs or material sheets (10), and with all the liquefied adhesive (11) being used in the formation of the bonded seam (12) and the region of the liquefied adhesive (11) remaining restricted to the bonded seam (12). The invention also relates to the use of an impact press.

No. of Pages : 17 No. of Claims : 26

(12) PATENT APPLICATION PUBLICATION
(21) Application No.202547080903 A
(19) INDIA
(22) Date of filing of Application :26/08/2025
(43) Publication Date : 14/11/2025

(54) Title of the invention : COMPOSITE STRUCTURE COMPRISING A MONOCRYSTALLINE THIN FILM ON A POLYCRYSTALLINE SILICON CARBIDE SUPPORT SUBSTRATE, AND ASSOCIATED PRODUCTION METHOD

(51) International classification	:C23C 16/01, C23C 16/32, C23C 16/44, C23C 16/56, C30B 28/14
(31) Priority Document No	:FR2301697
(32) Priority Date	:24/02/2023
(33) Name of priority country	:France
(86) International Application No	:PCT/EP2024/054102
Filing Date	:19/02/2024
(87) International Publication No	:WO 2024/175519
(61) Patent of Addition to Application Number	:NA
Filing Date	:NA
(62) Divisional to Application Number	:NA
Filing Date	:NA

(71)**Name of Applicant :**
1)SOITEC
Address of Applicant :PARC TECHNOLOGIQUE DES FONTAINES CHEMIN DES FRANQUES 38190 BERNIN France
(72)**Name of Inventor :**
1)BIARD, Hugo
2)POTIER, Alexandre
3)FERRATO, Marc
4)BOMMIER, Christophe

(57) Abstract :
The invention relates to a composite structure for producing microelectronic components, comprising a monocrystalline thin film placed on a polycrystalline silicon carbide support substrate, said support substrate having a preferential crystal orientation on each of its faces, according to which: - a texture coefficient C422 is less than 40%, and - the sum of texture coefficients C220+C200+C400 is greater than 50%, preferably greater than 80%. The invention also relates to a method for producing such a composite structure. Figure to be published with the abstract: No figure

No. of Pages : 27 No. of Claims : 18

(12) PATENT APPLICATION PUBLICATION
(21) Application No.202547082834 A
(19) INDIA
(22) Date of filing of Application :01/09/2025
(43) Publication Date : 14/11/2025

(54) Title of the invention : CRYOGENIC REFRIGERATOR, AND METHOD FOR COOLING DOWN CRYOGENIC REFRIGERATOR

(51) International classification	:F25B 9/14, F25B 9/00
(31) Priority Document No	:2023-014704
(32) Priority Date	:02/02/2023
(33) Name of priority country	:Japan
(86) International Application No	:PCT/JP2024/000833
Filing Date	:15/01/2024
(87) International Publication No	:WO 2024/161969
(61) Patent of Addition to Application Number	:NA
Filing Date	:NA
(62) Divisional to Application Number	:NA
Filing Date	:NA

(71)**Name of Applicant :**
1)SUMITOMO HEAVY INDUSTRIES, LTD.
Address of Applicant :1-1, Osaki 2-chome, Shinagawa-ku Tokyo 1416025 Japan
(72)**Name of Inventor :**
1)MORIE Takaaki

(57) Abstract :
A cryogenic refrigerator (10) comprises: a cold head (14) comprising a first cooling stage (33) and a second cooling stage (35) that is cooled to a lower temperature than the first cooling stage (33); a heater (46) that is thermally coupled to the first cooling stage (33); a first temperature sensor (48a) for measuring a first temperature of the first cooling stage (33); and a controller (50) configured to acquire the first temperature of the first cooling stage (33) from the first temperature sensor (48a) during a cooling-down operation of the cold head (14), and to control the heater (46) such that the first temperature of the first cooling stage (33) tracks an intermediate target temperature that is lower than an initial temperature in the cooling-down operation and is higher than a final target temperature of the first cooling stage (33).

No. of Pages : 37 No. of Claims : 8

(12) PATENT APPLICATION PUBLICATION
(21) Application No.202547082883 A
(19) INDIA
(22) Date of filing of Application :01/09/2025
(43) Publication Date : 14/11/2025

(54) Title of the invention : PERSONAL CARE APPARATUS

(51) International classification	:B26B 21/40, B26B 19/38
(31) Priority Document No	:23161146.8
(32) Priority Date	:10/03/2023
(33) Name of priority country	:EPO
(86) International Application No	:PCT/EP2024/055103
Filing Date	:28/02/2024
(87) International Publication No	:WO 2024/188646
(61) Patent of Addition to Application Number	:NA
Filing Date	:NA
(62) Divisional to Application Number	:NA
Filing Date	:NA

(71)**Name of Applicant :**
1)KONINKLIJKE PHILIPS N.V.
Address of Applicant :High Tech Campus 52 5656 AG Eindhoven Netherlands
(72)**Name of Inventor :**
1)DE GROOT, Ronald
2)VELDHUIS, Willem, Henderikus

(57) Abstract :
The subject-matter of the present disclosure relates to a personal care apparatus. The personal care apparatus comprises: a handle; a head at an end of the handle and having a connection portion for a device to connect to and disconnect from; an inertial measurement unit, IMU, sensor within the handle; and a controller. The controller is configured to: monitor measurements from the IMU sensor over time; compute one or more measurement values from the monitored measurements; identify a connection event or a disconnection event when the one or more measurement values fall within a classification boundary; and output the identified connection event or disconnection event as a signal.

No. of Pages : 9 No. of Claims : 13

(12) PATENT APPLICATION PUBLICATION
(21) Application No.202547082884 A
(19) INDIA
(22) Date of filing of Application :01/09/2025
(43) Publication Date : 14/11/2025

(54) Title of the invention : AUDIO APPARATUS AND METHOD OF OPERATION THEREFOR

(51) International classification	:H04S 7/00	(71)**Name of Applicant :**
(31) Priority Document No	:23162989.0	**1)KONINKLIJKE PHILIPS N.V.**
(32) Priority Date	:20/03/2023	Address of Applicant :High Tech Campus 52 5656 AG Eindhoven Netherlands
(33) Name of priority country	:EPO	(72)**Name of Inventor :**
(86) International Application No	:PCT/EP2024/055531	**1)JELFS, Sam Martin**
Filing Date	:04/03/2024	
(87) International Publication No	:WO 2024/193993	
(61) Patent of Addition to Application Number	:NA	
Filing Date	:NA	
(62) Divisional to Application Number	:NA	
Filing Date	:NA	

(57) Abstract :
An audio apparatus comprises a receiver (201) receiving an air flow audio frequency profile data indicating a dependency of an air flow audio frequency profile on an air flow velocity parameter. A frequency response generator (205) determines an air flow frequency response in dependence on the air flow audio frequency profile data, the user pose property, and an air flow velocity property for an air flow. An audio component generator (207) generates an air flow audio signal component by filtering the first audio signal using the air flow frequency response. An output (211) generates the audio signal to comprise the air flow audio signal component. The approach may provide an improved rendering of air flow sound, such as a more realistic rendering of wind noise.

No. of Pages : 23 No. of Claims : 17

(12) PATENT APPLICATION PUBLICATION
(21) Application No.202547083528 A
(19) INDIA
(22) Date of filing of Application :02/09/2025
(43) Publication Date : 14/11/2025

(54) Title of the invention : A VENTILATION SYSTEM WITH OXYGEN PREFILL COMPARTMENT

(51) International classification :A61M 16/10
(31) Priority Document No :2350204-0
(32) Priority Date :23/02/2023
(33) Name of priority country :Sweden
(86) International Application No :PCT/SE2024/050160
Filing Date :16/02/2024
(87) International Publication No :WO 2024/177555
(61) Patent of Addition to Application Number :NA
Filing Date :NA
(62) Divisional to Application Number :NA
Filing Date :NA

(71)**Name of Applicant :**
1)MAQUET CRITICAL CARE AB
Address of Applicant :P.O. Box 6108 171 06 Solna Sweden
(72)**Name of Inventor :**
1)TROILI, Carl-Erik

(57) Abstract :
The disclosure relates to a ventilation system (1) for supplying oxygen-containing breathing gas to a patient (3) via a gas delivery line (5) comprising a flow generator (7) for generating a flow of air from an air inlet (11) of the gas delivery line (5) towards the patient (3). The system (1) comprises an oxygen prefill compartment (9) arranged downstream of the air inlet (11) such that air from the air inlet (11) flows through the oxygen prefill compartment (9) on its way towards the patient (3). The system (1) is configured such that oxygen may be delivered both to the patient (3) and to the oxygen prefill compartment (9) via an oxygen valve (13). By delivering oxygen to the oxygen prefill compartment (9) prior to start of a high-flow period of an inspiration phase, the system (1) is able to deliver up to 100% oxygen to the patient (3) even with an oxygen valve (13) that is incapable of delivering a flow of oxygen that matches the peak inspiratory flow generated by the flow generator.

No. of Pages : 22 No. of Claims : 15

(12) PATENT APPLICATION PUBLICATION
(21) Application No.202547083684 A
(19) INDIA
(22) Date of filing of Application :03/09/2025
(43) Publication Date : 14/11/2025

(54) Title of the invention : METHOD(S) AND/OR SYSTEM(S) FOR GENERATING A MEDICAL IMAGING REPORT

(51) International classification	:G16H 30/40, G16H 50/20, G16H 15/00
(31) Priority Document No	:2023106660
(32) Priority Date	:21/03/2023
(33) Name of priority country	:Russia
(86) International Application No	:PCT/EP2024/057098
Filing Date	:18/03/2024
(87) International Publication No	:WO 2024/194226
(61) Patent of Addition to Application Number	:NA
Filing Date	:NA
(62) Divisional to Application Number	:NA
Filing Date	:NA

(71)**Name of Applicant :**
1)KONINKLIJKE PHILIPS N.V.
Address of Applicant :High Tech Campus 52 5656 AG Eindhoven Netherlands
(72)**Name of Inventor :**
1)FLÄSCHNER, Nick
2)WENZEL, Fabian
3)EWALD, Arne
4)WEESE, Rolf Jürgen
5)VAN DER VEN, John
6)MARKOV, Nikita
7)PADALKO, Mikhail

(57) Abstract :
A computer-implemented method is configured to link each anatomical tissue in a set of anatomical tissues to a corresponding set of possible findings and a different anatomical identifier, map voxels of image data to the different anatomical identifiers, receive a first user input selecting a first anatomical identifier, displaying a first list of possible findings for the first anatomical identifier, receiving a second user input selecting a first finding from the possible findings for the first anatomical identifier, and adding the first finding to a first entry in a list of selected findings.

No. of Pages : 19 No. of Claims : 20

(12) PATENT APPLICATION PUBLICATION
(21) Application No.202547083685 A
(19) INDIA
(22) Date of filing of Application :03/09/2025
(43) Publication Date : 14/11/2025

(54) Title of the invention : SYSTEMS AND METHODS FOR IMPROVING A QUALITY OF A VIDEO STREAM FROM AN IMAGING BAY AND FACILITATE A REMOTE EXPERT USER TO VISUALLY GUIDE A LOCAL OPERATOR IN IMAGE ACQUISITION WORKFLOW

(51) International classification	:G06T 5/60, G06T 5/90, G16H 40/67
(31) Priority Document No	:63/455641
(32) Priority Date	:30/03/2023
(33) Name of priority country	:U.S.A.
(86) International Application No	:PCT/EP2024/058582
Filing Date	:28/03/2024
(87) International Publication No	:WO 2024/200705
(61) Patent of Addition to Application Number	:NA
Filing Date	:NA
(62) Divisional to Application Number	:NA
Filing Date	:NA

(71)**Name of Applicant :**
1)KONINKLIJKE PHILIPS N.V.
Address of Applicant :High Tech Campus 52 5656 AG Eindhoven Netherlands
(72)**Name of Inventor :**
1)CHADUVULA, Siva Chaitanya
2)AMTHOR, Thomas Erik
3)WANG, Xinyu
4)STAROBINETS, Olga
5)UHLEMANN, Falk
6)KOKER, Ekin
7)TELLIS, Ranjith Naveen
8)FINDEKLEE, Christian
9)KALKANLI, Beyza
10)WANG, Jessica

(57) Abstract :
In a method for assisting a medical imaging examination of a patient, a video stream of the medical imaging examination is received. One or more artifacts in the received video stream are detected. The one or more detected artifacts in the video stream are suppressed to generate a processed video stream. The processed video stream is transmitted to an electronic processing device for use by a remote user, and displayed on a display device of the electronic processing device. At least one annotation of a base image in the video stream may be received from the remote user, and the at least one annotation superimposed on the video stream to generate an annotated video stream which is transmitted and displayed at a local operator electronic processing device operable by a local operator performing the medical imaging examination.

No. of Pages : 27 No. of Claims : 20

(12) PATENT APPLICATION PUBLICATION
(21) Application No.202547083769 A
(19) INDIA
(22) Date of filing of Application :03/09/2025
(43) Publication Date : 14/11/2025

(54) Title of the invention : LIQUID BASE PRODUCT, LIQUID FORMULATED PRODUCT, LIQUID END PRODUCT, RENEWABLE AND BIODEGRADABLE FLEXIBLE POLYMER, PROCESS FOR MANUFACTURING A LIQUID BASE PRODUCT, PROCESS FOR MANUFACTURING A LIQUID FORMULATED PRODUCT, PROCESS FOR MANUFACTURING A LIQUID END PRODUCT, PROCESS FOR MANUFACTURING A RENEWABLE AND BIODEGRADABLE FLEXIBLE POLYMER

(51) International classification	:C08G 18/36, C08G 18/42, C08G 18/72, C08G 63/00, C08J 9/12
(31) Priority Document No	:1020230023380
(32) Priority Date	:07/02/2023
(33) Name of priority country	:Brazil
(86) International Application No	:PCT/BR2024/050043
Filing Date	:06/02/2024
(87) International Publication No	:WO 2024/164058
(61) Patent of Addition to Application Number	:NA
Filing Date	:NA
(62) Divisional to Application Number	:NA
Filing Date	:NA

(71)**Name of Applicant :**
1)ISOCARE SOLUÇÕES AMBIENTAIS S/A
Address of Applicant :Av Coronel Marcos Konder, 1207, Sala 26 Sala 27, Centro 88301-303 Itajai - SC Brazil
(72)**Name of Inventor :**
1)CUEVAS PERLANZA, Laurêncio

(57) Abstract :
The present invention relates to a liquid base product comprising vegetable oil and/or modified vegetable oil, nitrilotriethanol and/or polyether polyol; a liquid formulated product comprising the base product and organic surfactants, catalysts, reagents and/or chemical blowing agent; a liquid end product comprising the formulated product, and/or a physical blowing agent and at least one isocyanate. The present invention further relates to a biodegradable, renewable, flexible polymer formed from a liquid end product. The present invention further relates to a process for manufacturing a biodegradable, renewable, flexible polymer.

No. of Pages : 29 No. of Claims : 22

(12) PATENT APPLICATION PUBLICATION
(21) Application No.202547083873 A
(19) INDIA
(22) Date of filing of Application :03/09/2025
(43) Publication Date : 14/11/2025

(54) Title of the invention : A SCREW EXTRUDER AND A METHOD OF CONTROLLING EXTRUSION PRESSURE IN A SCREW EXTRUDER

(51) International classification	:B21C 23/21, B30B 11/24
(31) Priority Document No	:20230198
(32) Priority Date	:28/02/2023
(33) Name of priority country	:Norway
(86) International Application No	:PCT/NO2024/050048
Filing Date	:27/02/2024
(87) International Publication No	:WO 2024/181868
(61) Patent of Addition to Application Number	:NA
Filing Date	:NA
(62) Divisional to Application Number	:NA
Filing Date	:NA

(71)**Name of Applicant :**
1)CIRCMET AS
Address of Applicant :Nedre Vollgate 1 0158 Oslo Norway
(72)**Name of Inventor :**
1)NIELSEN, Øyvind
2)STEEN, Idar Kjetil
3)WERENSKIOLD, Jens Christofer

(57) Abstract :
A screw extruder for extrusion of materials with high viscosity, comprises a screw (9) rotationally arranged in a bore (16) within a housing. The housing comprises a base section (11) having a material feed inlet (2), an extrusion section (14) having a compacting chamber (7) and an extrusion die opening (6), and one or more transport and compaction sections (12, 13) arranged between the base section (11) and the extrusion section (14). At least one of the housing sections (11-14) comprises one or more fluid conduits (4) and one or more fluid connectors (10) for connection to a fluid supply and circulation system, whereby the temperature in said at least one housing section may be controlled individually.

No. of Pages : 12 No. of Claims : 15

(12) PATENT APPLICATION PUBLICATION
(21) Application No.202547096900 A
(19) INDIA
(22) Date of filing of Application :08/10/2025
(43) Publication Date : 14/11/2025

(54) Title of the invention : PREDICTING EFFECTIVE ENERGY VALUES

(51) International classification	:A61B 6/03, A61B 6/00
(31) Priority Document No	:2023108950
(32) Priority Date	:10/04/2023
(33) Name of priority country	:Russia
(86) International Application No	:PCT/EP2024/058853
Filing Date	:02/04/2024
(87) International Publication No	:WO 2024/213426
(61) Patent of Addition to Application Number	:NA
Filing Date	:NA
(62) Divisional to Application Number	:NA
Filing Date	:NA

(71)**Name of Applicant :**
1)KONINKLIJKE PHILIPS N.V.
Address of Applicant :High Tech Campus 52 5656 AG Eindhoven Netherlands
(72)**Name of Inventor :**
1)DAERR, Heiner
2)SCHNELLBÄCHER, Nikolas David
3)POUDEL, Prabal
4)TSANDA, Artyom

(57) Abstract :
Proposed concepts thus aim to provide schemes, solutions, concept, designs, methods and systems pertaining to training a neural network model for predicting an effective energy value of a conventional CT image. In particular, embodiments aim to utilize mono-energetic CT images from spectral scanners, of which the effective energy values are known, in order to train a neural network model which can then be used to predict an effective energy value of a conventional CT image, i.e. typically not mono-energetic.

No. of Pages : 16 No. of Claims : 15

(12) PATENT APPLICATION PUBLICATION
(21) Application No.202547096901 A
(19) INDIA
(22) Date of filing of Application :08/10/2025
(43) Publication Date : 14/11/2025

(54) Title of the invention : X-RAY SYSTEM WITH MODULAR TWO-LAYER DETECTOR

(51) International classification	:G01T 1/16, G01T 1/29, A61B 6/03
(31) Priority Document No	:23167192.6
(32) Priority Date	:07/04/2023
(33) Name of priority country	:EPO
(86) International Application No	:PCT/EP2024/058721
Filing Date	:28/03/2024
(87) International Publication No	:WO 2024/208757
(61) Patent of Addition to Application Number	:NA
Filing Date	:NA
(62) Divisional to Application Number	:NA
Filing Date	:NA

(71)**Name of Applicant :**
1)KONINKLIJKE PHILIPS N.V.
Address of Applicant :High Tech Campus 52 5656 AG Eindhoven Netherlands
(72)**Name of Inventor :**
1)JOHNSON, Mark Thomas
2)VOGTMEIER, Gereon
3)KOEHLER, Thomas
4)CHAUDHURY, Sudipta
5)CHAKRABARTI, Biswaroop

(57) Abstract :
The present invention relates to a detection system for an X-ray imaging system. The detection system comprises a first detector a second detector, each detector comprising a detector area and being configured for detecting X-ray radiation emitted by an X-ray source of the X-ray imaging system impinging onto the respective detection area. The detection system is configured to adjust a position of at least one of the first detector and the second detector with respect to the other of the first detector and the second detector. The first detection area of the first detector and the second detection area of the second detector can be positioned at least partially one behind the other with respect to a direction of X-ray radiation emitted from the X-ray source of the X-ray imaging system.

No. of Pages : 10 No. of Claims : 12

(12) PATENT APPLICATION PUBLICATION
(21) Application No.202547096907 A
(19) INDIA
(22) Date of filing of Application :08/10/2025
(43) Publication Date : 14/11/2025

(54) Title of the invention : PERSISTENT DISPLAY OF BIOPSY TARGETS

(51) International classification	:A61B 8/08, A61B 8/00
(31) Priority Document No	:63/489392
(32) Priority Date	:09/03/2023
(33) Name of priority country	:U.S.A.
(86) International Application No	:PCT/US2024/018520
Filing Date	:05/03/2024
(87) International Publication No	:WO 2024/186817
(61) Patent of Addition to Application Number	:NA
Filing Date	:NA
(62) Divisional to Application Number	:NA
Filing Date	:NA

(71)**Name of Applicant :**
1)VERAN MEDICAL TECHNOLOGIES, INC.
Address of Applicant :1908 Innerbelt Business Center Dr. St. Louis, Missouri 63114 U.S.A.
(72)**Name of Inventor :**
1)LEE, Christopher

(57) Abstract :
Various aspects of methods, systems, and use cases may be used to generate and display a real-time a composite image, such as in a manner that combines a first US image in which a deep target is within the field of view (FOV) of an EBUS device together with one or more subsequently acquired second US images in which the deep target is no longer within the FOV of the EBUS device. In this way, the EBUS system persistently displays imaged biopsy targets even after the biopsy targets are no longer within the FOV of the US transducer.

No. of Pages : 38 No. of Claims : 25

(12) PATENT APPLICATION PUBLICATION
(21) Application No.202547096910 A
(19) INDIA
(22) Date of filing of Application :08/10/2025
(43) Publication Date : 14/11/2025

(54) Title of the invention : Regional Anti-Aging Monitoring For Organic Light-Emitting Diode

(51) International classification	:G09G 3/3208
(31) Priority Document No	:NA
(32) Priority Date	:NA
(33) Name of priority country	:NA
(86) International Application No	:PCT/CN2023/099357
Filing Date	:09/06/2023
(87) International Publication No	:WO 2024/250271
(61) Patent of Addition to Application Number	:NA
Filing Date	:NA
(62) Divisional to Application Number	:NA
Filing Date	:NA

(71)**Name of Applicant :**
1)QUALCOMM INCORPORATED
Address of Applicant :Attn: International IP Administration 5775 Morehouse Drive San Diego, California 92121-1714 U.S.A.
(72)**Name of Inventor :**
1)ZHANG, Nan
2)YANG, Xinchao
3)ZENG, Qi

(57) Abstract :
Disclosed is a computing device(100a,100B,200,300,500) configured to control a display(120a,512) that includes a region-of-interest (ROI)(130a,140b) and at least one other region separate from the ROI(130a,140b). Various aspects may include recording first information regarding illumination of pixels within the ROI(130a,140b) using a first spatial-temporal sample strategy(402), recording second information regarding illumination of pixels within the at least one other region using a second spatial-temporal sample strategy, wherein the first spatial-temporal sample strategy records more information per pixel than the second spatial-temporal sample strategy over the same amount of time(404). An output of the display(120a,512) in the ROI(130a,140b) may be modified based on an analysis of the recorded first information(406).

No. of Pages : 36 No. of Claims : 30

(12) PATENT APPLICATION PUBLICATION
(21) Application No.202547096916 A
(19) INDIA
(22) Date of filing of Application :08/10/2025
(43) Publication Date : 14/11/2025

(54) Title of the invention : OUTCOME-ORIENTED AUTOMATION PLATFORM

(51) International classification	:H04L 41/22, H04L 41/0803, G06F 3/04817, G06F 3/04842
(31) Priority Document No	:18/302746
(32) Priority Date	:18/04/2023
(33) Name of priority country	:U.S.A.
(86) International Application No	:PCT/US2024/014103
Filing Date	:01/02/2024
(87) International Publication No	:WO 2024/220125
(61) Patent of Addition to Application Number	:NA
Filing Date	:NA
(62) Divisional to Application Number	:NA
Filing Date	:NA

(71)**Name of Applicant :**
1)SERVICENOW, INC.
Address of Applicant :2225 Lawson Lane Santa Clara, CA 95054 U.S.A.
(72)**Name of Inventor :**
1)VAJJALA, Venu
2)NARAYANAN, Magesh
3)POTTA, Yasaswini
4)SABBAG, Shahil
5)SAINI, Atul

(57) Abstract :
A method includes generating, for display by way of a graphical user interface (GUI), a graphical representation of an existing state of a plurality of computing resources that visually represents the plurality of computing resources and one or more relationships therebetween. The method also includes determining a target state of the plurality of computing resources based on a user modification of the graphical representation of the existing state. The user modification may be obtained by way of the GUI. The method additionally includes determining, based on a difference between the target state and the existing state, one or more operations configured to modify the plurality of computing resources to reach the target state from the existing state. The method further includes executing the one or more operations.

No. of Pages : 43 No. of Claims : 20

(12) PATENT APPLICATION PUBLICATION
(21) Application No.202547096918 A
(19) INDIA
(22) Date of filing of Application :08/10/2025
(43) Publication Date : 14/11/2025

(54) Title of the invention : RF CROSSING IN AN OPTICAL MODULATOR FOR EQUALIZATION

(51) International classification	:G02F 1/225, G02F 1/035, G02F 1/21
(31) Priority Document No	:18/120894
(32) Priority Date	:13/03/2023
(33) Name of priority country	:U.S.A.
(86) International Application No	:PCT/US2024/019464
Filing Date	:11/03/2024
(87) International Publication No	:WO 2024/191959
(61) Patent of Addition to Application Number	:NA
Filing Date	:NA
(62) Divisional to Application Number	:NA
Filing Date	:NA

(71)**Name of Applicant :**
1)CIENA CORPORATION
Address of Applicant :7035 Ridge Road Hanover, MD 21076 U.S.A.
(72)**Name of Inventor :**
1)DELISLE-SIMARD, Alexandre
2)BROOKES, Gregory
3)VITIC, Michael

(57) Abstract :
An optical modulator includes an optical waveguide extending a length; and a plurality of Radio Frequency (RF) electrodes configured to modulate an optical signal in the optical waveguide, wherein the RF electrodes include an RF crossing located an end of the length and that is configured to equalize the optical signal. The optical signal is equalized via destructive interference after the RF crossing for attenuating modulation amplitude. At or near the end of the length, high frequencies of the optical signal are already strongly attenuated whereas low frequencies of the optical signal are not such that the low frequencies are equalized after the RF crossing.

No. of Pages : 19 No. of Claims : 2

(12) PATENT APPLICATION PUBLICATION
(21) Application No.202547096953 A
(19) INDIA
(22) Date of filing of Application :08/10/2025
(43) Publication Date : 14/11/2025

(54) Title of the invention : COMPOSITIONS AND METHODS FOR INHIBITION OF EXPRESSION OF INHIBIN SUBUNIT BETA E (INHBE) GENES

(51) International classification	:C12N 15/113, A61K 31/713, A61P 9/00
(31) Priority Document No	:63/489325
(32) Priority Date	:09/03/2023
(33) Name of priority country	:U.S.A.
(86) International Application No	:PCT/US2024/019416
Filing Date	:11/03/2024
(87) International Publication No	:WO 2024/187190
(61) Patent of Addition to Application Number	:NA
Filing Date	:NA
(62) Divisional to Application Number	:NA
Filing Date	:NA

(71)**Name of Applicant :**
1)BASECURE THERAPEUTICS LLC
Address of Applicant :3500 South DuPont Highway Dover, Delaware 19901 U.S.A.
(72)**Name of Inventor :**
1)YANG, Jing
2)KIM. Kevin J.
3)MONTERO, Saul Martinez

(57) Abstract :
The disclosure relates to double-stranded ribonucleic acid (dsRNA) targeting an INHBE gene, and methods of using the dsRNA to inhibit expression of INHBE.

No. of Pages : 86 No. of Claims : 81

(12) PATENT APPLICATION PUBLICATION
(21) Application No.202547096972 A
(19) INDIA
(22) Date of filing of Application :08/10/2025
(43) Publication Date : 14/11/2025

(54) Title of the invention : AXLE-TO-BEAM CONNECTION FOR HEAVY-DUTY VEHICLE AXLE/SUSPENSION SYSTEMS

(51) International classification	:B60G 9/00, B60G 7/00, B60G 7/04
(31) Priority Document No	:63/469850
(32) Priority Date	:31/05/2023
(33) Name of priority country	:U.S.A.
(86) International Application No	:PCT/US2024/031433
Filing Date	:29/05/2024
(87) International Publication No	:WO 2024/249491
(61) Patent of Addition to Application Number	:NA
Filing Date	:NA
(62) Divisional to Application Number	:NA
Filing Date	:NA

(71)**Name of Applicant :**
1)HENDRICKSON USA, L.L.C.
Address of Applicant :2021 Parkside Drive Schaumburg, Illinois 60173 U.S.A.
(72)**Name of Inventor :**
1)BRADLEY, Andrew L.
2)WESTNEDGE, Andrew J.

(57) Abstract :
An axle-to-beam connection for an axle/suspension system of a heavy-duty vehicle that includes an axle (217), a beam (212) with an alignment assembly (250), and an axle mount assembly (270). The alignment assembly (250) is integrally formed with or is rigidly attached to the beam (212). The axle mount assembly (270) intimately contacts and captures the axle (217). The axle (217) is rigidly secured to the axle mount assembly (270) without line welds. The axle mount assembly (270) is removably connected to the alignment assembly (250) to secure the axle to the beam (212).

No. of Pages : 28 No. of Claims : 40

(12) PATENT APPLICATION PUBLICATION
(21) Application No.202547096973 A
(19) INDIA
(22) Date of filing of Application :08/10/2025
(43) Publication Date : 14/11/2025

(54) Title of the invention : DEVICES, METHODS, APPARATUSES, AND COMPUTER READABLE MEDIA FOR TERAHERTZ CHANNEL COMMUNICATION

(51) International classification	:H04W 72/542
(31) Priority Document No	:NA
(32) Priority Date	:NA
(33) Name of priority country	:NA
(86) International Application No	:PCT/CN2023/080988
Filing Date	:13/03/2023
(87) International Publication No	:WO 2024/187331
(61) Patent of Addition to Application Number	:NA
Filing Date	:NA
(62) Divisional to Application Number	:NA
Filing Date	:NA

(71)**Name of Applicant :**
1)NOKIA SOLUTIONS AND NETWORKS OY
Address of Applicant :Karakaari 7, Espoo 02610 Finland
(72)**Name of Inventor :**
1)WANG, Wenjian
2)LIU, Jianguo
3)ZHOU, Yanni

(57) Abstract :
Disclosed are devices, methods, apparatuses, and computer readable media for terahertz channel communication. An example terminal device for communication may include at least one processor and at least one memory. The at least one memory may store instructions that, when executed by the at least one processor, may cause the terminal device at least to perform: receiving from a serving network device, distance aware information comprising a distance-bandwidth mapping table; deciding an available bandwidth based on the distance-bandwidth mapping table; determining terminal aware information of the terminal device; and transmitting to a serving network device, the terminal aware information, wherein the terminal aware information comprises positioning information and channel state information, and optionally information on the available bandwidth.

No. of Pages : 39 No. of Claims : 26

(12) PATENT APPLICATION PUBLICATION
(21) Application No.202547096975 A
(19) INDIA
(22) Date of filing of Application :08/10/2025
(43) Publication Date : 14/11/2025

(54) Title of the invention : HYDROPHOBIC GAS BARRIER COATING

(51) International classification	:A23B 7/16, B65D 81/00
(31) Priority Document No	:63/451810
(32) Priority Date	:13/03/2023
(33) Name of priority country	:U.S.A.
(86) International Application No	:PCT/IB2024/052429
Filing Date	:13/03/2024
(87) International Publication No	:WO 2024/189557
(61) Patent of Addition to Application Number	:NA
Filing Date	:NA
(62) Divisional to Application Number	:NA
Filing Date	:NA

(71)**Name of Applicant :**
1)NABACO INC.
Address of Applicant :5040 SH123 Building 500 San Marcos, Texas 78666 U.S.A.
(72)**Name of Inventor :**
1)BEALL, Gary

(57) Abstract :
There is provided a thixotropic composition that forms a hydrophobic gas barrier coating on the surface of an agricultural product, such as produce, or the surface of packaging materials, such as packaging materials used to package agricultural products, for protecting from dehydration and/or from oxidation, and/or for preventing oxygen ingress and/or water loss through a packaging material. The thixotropic composition comprises a smectite clay, a compatibilizing agent, an oil and/or wax, and a solvent comprising a volatile solvent. Also provided is methods for making the composition, methods for applying the composition to a hydrophobic surface, and uses of the composition.

No. of Pages : 35 No. of Claims : 44

(12) PATENT APPLICATION PUBLICATION
(21) Application No.202547096976 A
(19) INDIA
(22) Date of filing of Application :08/10/2025
(43) Publication Date : 14/11/2025

(54) Title of the invention : STRIPLINE WAFER FOR WAFER BASED CONNECTOR SYSTEM

(51) International classification	:H05K 1/02, H05K 1/11, H01R 13/646, H01R 13/6587
(31) Priority Document No	:63/490014
(32) Priority Date	:14/03/2023
(33) Name of priority country	:U.S.A.
(86) International Application No	:PCT/IB2024/052490
Filing Date	:14/03/2024
(87) International Publication No	:WO 2024/189573
(61) Patent of Addition to Application Number	:NA
Filing Date	:NA
(62) Divisional to Application Number	:NA
Filing Date	:NA

(71)**Name of Applicant :**
1)TE CONNECTIVITY SOLUTIONS GMBH
Address of Applicant :Mühlenstrasse 26 8200 Schaffhausen Switzerland
(72)**Name of Inventor :**
1)WALTON, Scott Eric
2)MILLER, Keith Edwin
3)CHAMPION, Bruce Allen
4)CINA, Michael Frank
5)ROSENAU, Joshua Allen
6)GINGRICH III, Charles Raymond

(57) Abstract :
A multilayer stripline wafer for use in an electrical connector. The multilayer stripline wafer includes multiple layers. Signal transmission pathways are positioned on at least one internal layer of the multiple layers. The signal transmission pathways may be uncoupled or loosely coupled singe ended single ended signal transmission pathways or differentially coupled signal transmission pathways. Conductive planar members are positioned in one or more layers of the multiple layers. The conductive planar members are spaced from the signal transmission pathways. One or more conductive planar members controls the impedance of the signal transmission pathways.

No. of Pages : 12 No. of Claims : 19

(12) PATENT APPLICATION PUBLICATION
(21) Application No.202547096998 A
(19) INDIA
(22) Date of filing of Application :08/10/2025
(43) Publication Date : 14/11/2025

(54) Title of the invention : SPARSITY-BASED REDUCTION OF GATE SWITCHING IN DEEP NEURAL NETWORK ACCELERATORS

(51) International classification	:G06N 3/08, G06N 3/0464
(31) Priority Document No	:18/325298
(32) Priority Date	:30/05/2023
(33) Name of priority country	:U.S.A.
(86) International Application No	:PCT/US2023/082951
Filing Date	:07/12/2023
(87) International Publication No	:WO 2024/248882
(61) Patent of Addition to Application Number	:NA
Filing Date	:NA
(62) Divisional to Application Number	:NA
Filing Date	:NA

(71)**Name of Applicant :**
1)INTEL CORPORATION
Address of Applicant :2200 Mission College Boulevard Santa Clara, California 95054 U.S.A.
(72)**Name of Inventor :**
1)LANGHAMMER, Martin
2)RAHA, Arnab
3)POWER, Martin

(57) Abstract :
Gate switching in deep learning operations can be reduced based on sparsity in the input data. A first element of an activation operand and a first element of a weight operand may be stored in input storage units associated with a multiplier in a processing element. The multiplier computes a product of the two elements, which may be stored in an output storage unit of the multiplier. After detecting that a second element of the activation operand or a second element of the weight operand is zero valued, gate switching is reduced by avoiding at least one gate switching needed for the multiply-accumulation operation. For instance, the input storage units may not be updated. A zero-valued data element may be stored in the output storage unit of the multiplier and used as a product of the second element of the activation operand and the second element of the weight operand.

No. of Pages : 55 No. of Claims : 25

(12) PATENT APPLICATION PUBLICATION

(21) Application No.202547097012 A

(19) INDIA

(22) Date of filing of Application :08/10/2025

(43) Publication Date : 14/11/2025

(54) Title of the invention : SENSING INFORMATION FOR SENSING AND HANDOVER OPERATIONS

(51) International classification	:H04W 36/00, G01S 13/00
(31) Priority Document No	:20230100459
(32) Priority Date	:09/06/2023
(33) Name of priority country	:Greece
(86) International Application No	:PCT/US2024/028815
Filing Date	:10/05/2024
(87) International Publication No	:WO 2024/253803
(61) Patent of Addition to Application Number	:NA
Filing Date	:NA
(62) Divisional to Application Number	:NA
Filing Date	:NA

(71)**Name of Applicant :**

1)QUALCOMM INCORPORATED

Address of Applicant :Attn: International IP Administration 5775 Morehouse Drive San Diego, California 92121-1714 U.S.A.

(72)**Name of Inventor :**

1)WU, Shijun

2)GULATI, Kapil

3)KUMARI, Preeti

4)STEFANATOS, Stelios

(57) Abstract :

Methods, systems, and devices for wireless communications are described. A source network entity may transmit a handover request to a target network entity indicating that a user equipment (UE) is to handover from the source network entity to the target network entity and indicating sensing information identifying that the UE is performing a sensing operation. The target network entity may transmit a response message to the source network entity indicating a sensing scheme enabling the UE to perform sensing during the handover and in some cases, authorizing the handover. Based on receiving the response message, the source network entity may transmit a handover message to the UE triggering the UE to perform handover and to perform the sensing RSs during the handover. The UE may perform the handover and the sensing based on the handover message.

No. of Pages : 81 No. of Claims : 30

(12) PATENT APPLICATION PUBLICATION
(21) Application No.202547097013 A
(19) INDIA
(22) Date of filing of Application :08/10/2025
(43) Publication Date : 14/11/2025

(54) Title of the invention : LOW-DENSITY PARITY-CHECK CODING INCLUDING PUNCTURED AUXILIARY BITS

(51) International classification	:H03M 13/11, H03M 13/00, H04L 1/00, H03M 13/31
(31) Priority Document No	:18/329569
(32) Priority Date	:05/06/2023
(33) Name of priority country	:U.S.A.
(86) International Application No	:PCT/US2024/028646
Filing Date	:09/05/2024
(87) International Publication No	:WO 2024/253799
(61) Patent of Addition to Application Number	:NA
Filing Date	:NA
(62) Divisional to Application Number	:NA
Filing Date	:NA

(71)**Name of Applicant :**
1)QUALCOMM INCORPORATED
Address of Applicant :Attn: International IP Administration 5775 Morehouse Drive San Diego, California 92121-1714 U.S.A.
(72)**Name of Inventor :**
1)YANG, Wei
2)SEN, Pinar
3)RICHARDSON, Thomas Joseph
4)JIANG, Jing

(57) Abstract :
A low-density parity-check encoder is provided that encodes a plurality of information bits according to a low-density parity-check matrix. The encoder generates auxiliary bits from the information bits, and the transmitter punctures the auxiliary bits while transmitting the information bits, thereby preserving a beneficial shape provided to the information bits by probabilistic amplitude shaping (PAS).

No. of Pages : 26 No. of Claims : 30

(12) PATENT APPLICATION PUBLICATION
(21) Application No.202547097014 A
(19) INDIA
(22) Date of filing of Application :08/10/2025
(43) Publication Date : 14/11/2025

(54) Title of the invention : GROUND SHIELD CONTACT MEMBER

(51) International classification	:H01R 12/71, H01R 12/72, H01R 13/24, H01R 13/26, H01R 13/6582
(31) Priority Document No	:63/490014
(32) Priority Date	:14/03/2023
(33) Name of priority country	:U.S.A.
(86) International Application No	:PCT/IB2024/052491
Filing Date	:14/03/2024
(87) International Publication No	:WO 2024/189574
(61) Patent of Addition to Application Number	:NA
Filing Date	:NA
(62) Divisional to Application Number	:NA
Filing Date	:NA

(71)**Name of Applicant :**
1)TE CONNECTIVITY SOLUTIONS GMBH
Address of Applicant :Mühlenstrasse 26 8200 Schaffhausen Switzerland
(72)**Name of Inventor :**
1)WALTON, Scott Eric
2)ANNIS, Kyle Gary
3)MILLER, Keith Edwin
4)TUIN, Jacobus Nicolaas
5)SMINK, Rutger Wilhelmus
6)FLORIS, Sander Johannes
7)CHAMPION, Bruce Allen
8)GINGRICH III, Charles Raymond

(57) Abstract :
An electrical connector with a housing having at least one slot for receiving an electrical wafer therein. Signal contacts are positioned on a first side of the at least one slot. The signal contact resilient contact arms exert a first normal force on the electrical wafer inserted in the at least one slot. At least one ground shield contact member is positioned on a second side of the at least one slot. The ground shield resilient contact arms exert a second normal force on the wafer inserted in the at least one slot. The second normal force exerted by the ground shield resilient contact arms is greater than the first normal force exerted by the signal contact resilient contact arms. The wafer is biased toward the signal contact resilient contact arms of the signal contacts regardless of a thickness of the wafer.

No. of Pages : 13 No. of Claims : 19

(12) PATENT APPLICATION PUBLICATION
(21) Application No.202547097015 A
(19) INDIA
(22) Date of filing of Application :08/10/2025
(43) Publication Date : 14/11/2025

(54) Title of the invention : BIARYLAMIDE DERIVATIVES AND THEIR USE AS PKMYT1 INHIBITORS

(51) International classification	:C07D 413/12, C07D 417/12, C07D 417/14, C07D 487/04, C07D 513/04
(31) Priority Document No	:23386018.8
(32) Priority Date	:09/03/2023
(33) Name of priority country	:EPO
(86) International Application No	:PCT/EP2024/056305
Filing Date	:08/03/2024
(87) International Publication No	:WO 2024/184550
(61) Patent of Addition to Application Number	:NA
Filing Date	:NA
(62) Divisional to Application Number	:NA
Filing Date	:NA

(71)**Name of Applicant :**
1)CANCER RESEARCH TECHNOLOGY LIMITED
Address of Applicant :2 Redman Place London E20 1JQ U.K.
2)MY-T BIO LIMITED
(72)**Name of Inventor :**
1)RAOOF, Ali
2)SPYRIDON-GAVRIIL, Efthymios
3)NICULESCU-DUVAZ, Dan
4)BROWN, Michael
5)SMITHEN, Deborah
6)FITZPATRICK, Christopher
7)GRYTSAI, Oleksandr
8)ALJARAH, Mohammed
9)LISAUSKAITE, Monika
10)BURGIN, Ryan
11)KERSHAW, Christopher Stephen
12)LEUNG, Leo
13)HAGAN, Iain
14)MARAIS, Richard
15)SPRINGER, Caroline

(57) Abstract :
The present invention pertains generally to the field of therapeutic compounds. More specifically the present invention pertains to certain biarylamide compounds of the following formula (also referred to herein as "BAA compounds") which inhibit Protein Kinase, Membrane Associated Tyrosine/Threonine 1 (PKMYT1). The present invention also pertains to pharmaceutical compositions comprising such compounds, and the use of such compounds and compositions, both in vitro and in vivo, to inhibit PKMYT1 kinase; to treat disorders (e.g., diseases) that are ameliorated by the inhibition of PKMYT1 kinase; to treat a proliferative disorder, cancer, etc.
Formula (I)

No. of Pages : 493 No. of Claims : 17

(12) PATENT APPLICATION PUBLICATION
(21) Application No.202547097028 A
(19) INDIA
(22) Date of filing of Application :08/10/2025
(43) Publication Date : 14/11/2025

(54) Title of the invention : OUTLIER ATTENUATION IN TRANSFORMER NEURAL NETWORKS

(51) International classification	:G06N 3/0455, G06N 3/048, G06N 3/0985, G06N 3/084
(31) Priority Document No	:63/502454
(32) Priority Date	:16/05/2023
(33) Name of priority country	:U.S.A.
(86) International Application No	:PCT/US2024/021726
Filing Date	:27/03/2024
(87) International Publication No	:WO 2024/238020
(61) Patent of Addition to Application Number	:NA
Filing Date	:NA
(62) Divisional to Application Number	:NA
Filing Date	:NA

(71)**Name of Applicant :**
1)QUALCOMM INCORPORATED
Address of Applicant :ATTN: International IP Administration 5775 Morehouse Drive San Diego, California 92121-1714 U.S.A.
(72)**Name of Inventor :**
1)BONDARENKO, Yelysei
2)NAGEL, Markus
3)BLANKEVOORT, Tijmen Pieter Frederik

(57) Abstract :
Certain aspects of the present disclosure provide techniques and apparatus for processing data using a transformer neural network. The method generally includes receiving an input for processing using a transformer neural network. An attention output is generated in the transformer neural network. Generally, the attention output may be generated such that outlier values for the attention output are attenuated in the transformer neural network. An output of the transformer neural network is generated based on the generated attention output.

No. of Pages : 19 No. of Claims : 28

(12) PATENT APPLICATION PUBLICATION
(21) Application No.202547097029 A
(19) INDIA
(22) Date of filing of Application :08/10/2025
(43) Publication Date : 14/11/2025

(54) Title of the invention : TEACHING LANGUAGE MODELS TO DRAW SKETCHES

(51) International classification	:G06N 3/045, G06T 11/00, G06T 11/20, G06V 10/82
(31) Priority Document No	:63/469253
(32) Priority Date	:26/05/2023
(33) Name of priority country	:U.S.A.
(86) International Application No	:PCT/US2024/022051
Filing Date	:28/03/2024
(87) International Publication No	:WO 2024/248928
(61) Patent of Addition to Application Number	:NA
Filing Date	:NA
(62) Divisional to Application Number	:NA
Filing Date	:NA

(71)**Name of Applicant :**
1)QUALCOMM INCORPORATED
Address of Applicant :ATTN: International IP Administration 5775 Morehouse Drive San Diego, CA 92121-1714 U.S.A.
(72)**Name of Inventor :**
1)POURREZA, Reza
2)MEMISEVIC, Roland
3)BHATTACHARYYA, Apratim
4)PANCHAL, Sunny, Praful, Kumar
5)LEE, Mingu
6)MADAN, Pulkit

(57) Abstract :
A processor-implemented method for image generation using an artificial neural network (ANN) includes receiving an input including one or more of an image or a text prompt. The ANN processes the input to determine one or more virtual brush strokes to generate an output image or one or more commands for controlling an image drawing application to generate the output image. A list of the one or more virtual brush strokes to generate the output image or the one or more commands for controlling the image drawing application to generate the output image. The one or more virtual brush strokes or commands may be executed to generate a sketch based on the input.

No. of Pages : 31 No. of Claims : 30

(12) PATENT APPLICATION PUBLICATION
(21) Application No.202547097095 A
(19) INDIA
(22) Date of filing of Application :08/10/2025
(43) Publication Date : 14/11/2025

(54) Title of the invention : USER EQUIPMENT CONTROL OF RECONFIGURABLE INTELLIGENT SURFACE

(51) International classification :H04W 74/02
(31) Priority Document No :NA
(32) Priority Date :NA
(33) Name of priority country :NA
(86) International Application No :PCT/CN2023/099270
Filing Date :09/06/2023
(87) International Publication No :WO 2024/250259
(61) Patent of Addition to Application Number :NA
Filing Date :NA
(62) Divisional to Application Number :NA
Filing Date :NA

(71)**Name of Applicant :**
1)QUALCOMM INCORPORATED
Address of Applicant :5775 Morehouse Drive, San Diego California 92121-1714 U.S.A.
(72)**Name of Inventor :**
1)YIN, Mingxi
2)HUANG, Min
3)XU, Hao

(57) Abstract :
Various aspects of the present disclosure generally relate to wireless communication. In some aspects, a user equipment (UE) may receive, from a network node via a reconfigurable intelligent surface (RIS), a synchronization signal block (SSB). The UE may establish, based at least in part on receiving the SSB, a network connection with the network node, wherein establishing the network connection includes performing a random access procedure via the RIS and transmitting a control signal for controlling the RIS. Numerous other aspects are described.

No. of Pages : 65 No. of Claims : 30

(12) PATENT APPLICATION PUBLICATION
(21) Application No.202547097096 A
(19) INDIA
(22) Date of filing of Application :08/10/2025
(43) Publication Date : 14/11/2025

(54) Title of the invention : USER EQUIPMENT CAPABILITY INFORMATION REGARDING FULL POWER TRANSMISSION AT DIFFERENT ANTENNA GROUPS

(51) International classification :H04W 24/08
(31) Priority Document No :NA
(32) Priority Date :NA
(33) Name of priority country :NA
(86) International Application No :PCT/CN2023/095253
Filing Date :19/05/2023
(87) International Publication No :WO 2024/239141
(61) Patent of Addition to Application Number :NA
Filing Date :NA
(62) Divisional to Application Number :NA
Filing Date :NA

(71)**Name of Applicant :**
1)QUALCOMM INCORPORATED
Address of Applicant :5775 Morehouse Drive, San Diego California 92121-1714 U.S.A.
(72)**Name of Inventor :**
1)HUANG, Yi
2)XIAO, Kexin

(57) Abstract :
Various aspects of the present disclosure generally relate to wireless communication. In some aspects, a user equipment (UE) may receive a capability enquiry. The UE may transmit a capability message, in response to the capability enquiry, that includes at least a bitmap associated with a set of antenna groups, wherein each bit in the bitmap indicates whether a corresponding antenna group in the set of antenna groups is capable of independently transmitting at full power. Numerous other aspects are described.

No. of Pages : 43 No. of Claims : 30

(12) PATENT APPLICATION PUBLICATION
(21) Application No.202547097117 A
(19) INDIA
(22) Date of filing of Application :08/10/2025
(43) Publication Date : 14/11/2025

(54) Title of the invention : ACCESS POINT CONFIGURED FOR UNAVAILABILITY ADVERTISEMENT WITH TARGET WAKE-UP TIME (TWT)

(51) International classification	:H04W 52/02, H04W 68/02, H04W 84/12
(31) Priority Document No	:63/509497
(32) Priority Date	:21/06/2023
(33) Name of priority country	:U.S.A.
(86) International Application No	:PCT/US2024/034166
Filing Date	:14/06/2024
(87) International Publication No	:WO 2024/263498
(61) Patent of Addition to Application Number	:NA
Filing Date	:NA
(62) Divisional to Application Number	:NA
Filing Date	:NA

(71)**Name of Applicant :**
1)INTEL CORPORATION
Address of Applicant :2200 Mission College Blvd. Santa Clara, California 95054 U.S.A.
(72)**Name of Inventor :**
1)BRAVO, Daniel F.
2)CARIOU, Laurent
3)CORDEIRO, Carlos
4)QI, Emily H.

(57) Abstract :
An access point (AP) operating as a Target Wake-up Time (TWT) scheduling AP may encode a broadcast TWT element for transmission to advertise a broadcast TWT with one or more broadcast TWT Service Periods (SPs). When the broadcast TWT element carries one or more broadcast TWT parameter set fields with a broadcast TWT ID subfield equal to zero and has a Responder Power Management (PM) Mode subfield equal to one, the AP may set a NDP Paging Indicator/Unavailability Mode subfield of a Control Field of the broadcast TWT element to a value of zero to indicate that the AP is unavailable outside of the one or more broadcast TWT SPs except for other TWT SPs that are setup with the AP or advertised by the AP. The AP may set the NDP Paging Indicator/Unavailability Mode subfield of the Control field to a value of one to indicate that the AP is unavailable outside of the one or more broadcast TWT SPs including unavailable during any time that falls within the other TWT SPs that are setup with the AP or advertised by the AP.

No. of Pages : 36 No. of Claims : 20

(12) PATENT APPLICATION PUBLICATION
(21) Application No.202547097200 A
(19) INDIA
(22) Date of filing of Application :08/10/2025
(43) Publication Date : 14/11/2025

(54) Title of the invention : EXERCISE MACHINE WITH ADJUSTABLE RACK OUT HOOKS AND ADJUSTABLE COUNTERWEIGHTED SAFETY TIERS

(51) International classification	:A63B 21/06, A63B 21/062, A63B 21/072, A63B 21/078, A63B 21/00
(31) Priority Document No	:63/452308
(32) Priority Date	:15/03/2023
(33) Name of priority country	:U.S.A.
(86) International Application No	:PCT/US2024/016657
Filing Date	:21/02/2024
(87) International Publication No	:WO 2024/191564
(61) Patent of Addition to Application Number	:NA
Filing Date	:NA
(62) Divisional to Application Number	:NA
Filing Date	:NA

(71)**Name of Applicant :**
1)HOIST FITNESS SYSTEMS, INC.
Address of Applicant :11900 Community Road Poway, California 92064 U.S.A.
(72)**Name of Inventor :**
1)MEREDITH, Jeffrey O.
2)HILDERBRAND, Tyler S.

(57) Abstract :
An exercise machine with an adjustable safety tier and rack out hook system, having: (a) a safety tier attached to and moveable along each of a pair of upwardly-extending guide rods, wherein the safety tier can be rotated to a locked position such that the safety tier latches onto the upwardly-extending support member or rotated to an unlocked position; (b) a counterweight connected to each safety tier; and (c) a rack out hook attached to and moveable along each of the upwardly-extending guide rods, wherein the rack out hook can be rotated to a locked position such that the rack out hook latches onto the upwardly-extending support member or rotated to an unlocked position.

No. of Pages : 7 No. of Claims : 14

(12) PATENT APPLICATION PUBLICATION
(21) Application No.202547097201 A
(19) INDIA
(22) Date of filing of Application :08/10/2025
(43) Publication Date : 14/11/2025

(54) Title of the invention : METHOD FOR MANUFACTURING MULTICORE OPTICAL FIBER AND MULTICORE OPTICAL FIBER PREFORM

(51) International classification	:C03B 37/012, G02B 6/02
(31) Priority Document No	:2023-042979
(32) Priority Date	:17/03/2023
(33) Name of priority country	:Japan
(86) International Application No	:PCT/JP2024/005020
Filing Date	:14/02/2024
(87) International Publication No	:WO 2024/195366
(61) Patent of Addition to Application Number	:NA
Filing Date	:NA
(62) Divisional to Application Number	:NA
Filing Date	:NA

(71)**Name of Applicant :**
1)SUMITOMO ELECTRIC INDUSTRIES, LTD.
Address of Applicant :5-33, Kitahama 4-chome, Chuo-ku, Osaka-shi, Osaka 5410041 Japan
(72)**Name of Inventor :**
1)NAGASHIMA Takuji
2)NOMURA Takahiro

(57) Abstract :
This method for manufacturing a multicore optical fiber includes: a step for inserting multiple glass rods into multiple holes provided in a glass tube; a step for sealing a first end of the glass tube; and a step for decompressing the inside of the multiple holes from a second end of the glass tube and drawing the glass tube and the multiple glass rods while integrating same. When the cross-sectional area of the glass tube before the drawing step is defined as S1 [m2], the sum of the cross-sectional areas of the multiple glass rods before the drawing step is defined as S2 [m2], and the cross-sectional area of the multicore optical fiber after the drawing step is defined as S3 [m2], the inserting step is carried out so that the sum of the areas of gaps between the glass tube and the multiple glass rods before the drawing step in a cross-section orthogonal to the axial direction of the glass tube is equal to or less than (S1 + S2)/S3 × 5.66 × 10-4 [mm2], and the inserting step is carried out in an environment having cleanliness higher than class 1,000.

No. of Pages : 15 No. of Claims : 8

(12) PATENT APPLICATION PUBLICATION
(19) INDIA
(22) Date of filing of Application :08/10/2025
(21) Application No.202547097202 A
(43) Publication Date : 14/11/2025

(54) Title of the invention : TIRE TREAD

(51) International classification	:B60C 1/00, C08K 3/36
(31) Priority Document No	:63/490399
(32) Priority Date	:15/03/2023
(33) Name of priority country	:U.S.A.
(86) International Application No	:PCT/US2024/019657
Filing Date	:13/03/2024
(87) International Publication No	:WO 2024/192078
(61) Patent of Addition to Application Number	:NA
Filing Date	:NA
(62) Divisional to Application Number	:NA
Filing Date	:NA

(71)**Name of Applicant :**
1)BEYOND LOTUS LLC
Address of Applicant :c/o Corporation Service Company 251 Little Falls Drive Wilmington, Delaware 19808 U.S.A.
(72)**Name of Inventor :**
1)BEAULIEU, Michael
2)ZHANG, Ping
3)MOESER, Geoffrey D.
4)XIONG, Jincheng
5)DOSHI, Dhaval A.

(57) Abstract :
Disclosed herein are treads comprising at least one elastomer and at least 15 phr silica, wherein the tread has a low total concentration of defects arising from particles (e.g., silica, carbon black) and/or voids.

No. of Pages : 45 No. of Claims : 58

(12) PATENT APPLICATION PUBLICATION
(21) Application No.202547097203 A
(19) INDIA
(22) Date of filing of Application :08/10/2025
(43) Publication Date : 14/11/2025

(54) Title of the invention : ELECTRICAL CONTACT WITH TEXTURED CONTACT INTERFACE

(51) International classification	:H01R 12/71, H01R 12/72, H01R 13/24, H01R 13/26, H01R 39/02
(31) Priority Document No	:63/490014
(32) Priority Date	:14/03/2023
(33) Name of priority country	:U.S.A.
(86) International Application No	:PCT/IB2024/052493
Filing Date	:14/03/2024
(87) International Publication No	:WO 2024/189575
(61) Patent of Addition to Application Number	:NA
Filing Date	:NA
(62) Divisional to Application Number	:NA
Filing Date	:NA

(71)**Name of Applicant :**
1)TE CONNECTIVITY SOLUTIONS GMBH
Address of Applicant :Mühlenstrasse 26 8200 Schaffhausen Switzerland
(72)**Name of Inventor :**
1)KLINGER, Brian Todd
2)DESHMUKH, Ranjan Deepak
3)BHARGAVA, Suvrat
4)GINGRICH III, Charles R.

(57) Abstract :
An electrical contact having at least one textured contact interface. The at least one textured contact interface includes a radiused portion with a plurality of raised contact areas. Voids are positioned between the plurality of raised contact areas. The radiused portion of the at least one textured contact interface provides more than one point of contact when the radiused portion of the at least one textured contact interface is positioned in electrical engagement with a mating electrical contact.

No. of Pages : 10 No. of Claims : 11

(12) PATENT APPLICATION PUBLICATION
(21) Application No.202547097204 A
(19) INDIA
(22) Date of filing of Application :08/10/2025
(43) Publication Date : 14/11/2025

(54) Title of the invention : TREATMENT FOR PROTECTING PRODUCE FROM SUPERFICIAL SCALD AND/OR SCUFFING DAMAGE

(51) International classification	:A23B 7/16, A23L 3/3454
(31) Priority Document No	:63/451805
(32) Priority Date	:13/03/2023
(33) Name of priority country	:U.S.A.
(86) International Application No	:PCT/IB2024/052430
Filing Date	:13/03/2024
(87) International Publication No	:WO 2024/189558
(61) Patent of Addition to Application Number	:NA
Filing Date	:NA
(62) Divisional to Application Number	:NA
Filing Date	:NA

(71)**Name of Applicant :**
1)NABACO INC.
Address of Applicant :5040 SH123 Building 500 San Marcos, Texas 78666 U.S.A.
(72)**Name of Inventor :**
1)BEALL, Gary

(57) Abstract :
A thixotropic aqueous mixture for preventing superficial scald and/or scuffing damage on produce, such as fruit or pome fruits, and an application method thereof comprising at least one smectite clay and a water-soluble polymer, wherein the thixotropic aqueous mixture is added with high shear mixing to water then applied to produce, such as fruit or pome fruit, via a dip tank, spray bar, or brush bed or combination thereof.

No. of Pages : 37 No. of Claims : 33

(12) PATENT APPLICATION PUBLICATION
(21) Application No.202547097222 A
(19) INDIA
(22) Date of filing of Application :08/10/2025
(43) Publication Date : 14/11/2025

(54) Title of the invention : GEOMETRIC ALGEBRA TRANSFORMERS

(51) International classification	:G06N 3/0455, G06N 3/0475, G06N 3/084
(31) Priority Document No	:63/502613
(32) Priority Date	:16/05/2023
(33) Name of priority country	:U.S.A.
(86) International Application No	:PCT/US2024/021774
Filing Date	:27/03/2024
(87) International Publication No	:WO 2024/238022
(61) Patent of Addition to Application Number	:NA
Filing Date	:NA
(62) Divisional to Application Number	:NA
Filing Date	:NA

(71)**Name of Applicant :**
1)QUALCOMM INCORPORATED
Address of Applicant :Attn: International IP Administration 5775 Morehouse Drive San Diego, California 92121-1714 U.S.A.
(72)**Name of Inventor :**
1)BREHMER, Johann Hinrich
2)BEHRENDS, Soenke
3)DE HAAN, Pim
4)COHEN, Taco Sebastiaan

(57) Abstract :
Systems and techniques are described herein for operating an apparatus having a geometric algebra transformer. A computing device can receive, at a geometric algebra transformer, multivector inputs processed from raw data associated with a three-dimensional space. The computing device can process, via the geometric algebra transformer, the multivector inputs to generate multivector outputs. The geometric algebra transformer is trained to process geometric algebra representations associated with the multivector inputs and to be equivariant with respect to translations and rotations.

No. of Pages : 40 No. of Claims : 30

(12) PATENT APPLICATION PUBLICATION
(21) Application No.202547097223 A
(19) INDIA
(22) Date of filing of Application :08/10/2025
(43) Publication Date : 14/11/2025

(54) Title of the invention : CONTENT MODIFICATION FOR IMPROVING USER SAFETY

(51) International classification :G06F 3/01
(31) Priority Document No :18/322952
(32) Priority Date :24/05/2023
(33) Name of priority country :U.S.A.
(86) International Application No :PCT/US2024/024063
Filing Date :11/04/2024
(87) International Publication No :WO 2024/242783
(61) Patent of Addition to Application Number :NA
Filing Date :NA
(62) Divisional to Application Number :NA
Filing Date :NA

(71)**Name of Applicant :**
1)QUALCOMM INCORPORATED
Address of Applicant :ATTN: International IP Administration 5775 Morehouse Drive San Diego, California 92121-1714 U.S.A.
(72)**Name of Inventor :**
1)KESKIN, Mustafa

(57) Abstract :
In some aspects, a user equipment (UE) may identify a boundary for interacting with content. The UE may determine a center of gravity within the boundary for interacting with the content. The UE may modify the content in accordance with the center of gravity. Numerous other aspects are described.

No. of Pages : 33 No. of Claims : 30

(12) PATENT APPLICATION PUBLICATION

(21) Application No.202547097294 A

(19) INDIA

(22) Date of filing of Application :09/10/2025

(43) Publication Date : 14/11/2025

(54) Title of the invention : WIND TURBINE AMIABLE

(51) International classification	:F03D 1/06	(71)**Name of Applicant :**
(31) Priority Document No	:1044563	**1)CORTEN HOLDING BV**
(32) Priority Date	:10/03/2023	Address of Applicant :Kanaaldijk 294 1831 BH Koedijk Netherlands
(33) Name of priority country	:Netherlands	(72)**Name of Inventor :**
(86) International Application No	:PCT/NL2024/000001	**1)CORTEN Gustave Paul**
Filing Date	:10/03/2024	
(87) International Publication No	:WO 2024/191284	
(61) Patent of Addition to Application Number	:NA	
Filing Date	:NA	
(62) Divisional to Application Number	:NA	
Filing Date	:NA	

(57) Abstract :

A HAT wind turbine (1) for the production of electricity from wind, comprising a tower (5), a nacelle (6), a generator and a rotor (2), the rotor being rotatable about a rotor axis by the wind, the rotor having a rotor solidity SOLrotor of maximally 0.10 and the rotor having a radius R (3), wherein the rotor comprises a number of blades (4) N of at least 4, which reach at least a radial position of 0.90R, and wherein the blades have a distribution of a local chord cr (9) versus a radial position r, wherein the local chord cr in the radial range from r = 15%R to R is one of: below 5.5%R; below 5%R; below 4.5%R; below 4%R; below 3%R; below 2%R; and below 1,5%R.

No. of Pages : 53 No. of Claims : 27

(12) PATENT APPLICATION PUBLICATION
(21) Application No.202547097314 A
(19) INDIA
(22) Date of filing of Application :09/10/2025
(43) Publication Date : 14/11/2025

(54) Title of the invention : OPTICAL BACKPLANE CONNECTOR SYSTEM

(51) International classification	:G02B 6/38, G02B 6/42, G02B 6/43
(31) Priority Document No	:63/452385
(32) Priority Date	:15/03/2023
(33) Name of priority country	:U.S.A.
(86) International Application No	:PCT/IB2024/052549
Filing Date	:15/03/2024
(87) International Publication No	:WO 2024/189600
(61) Patent of Addition to Application Number	:NA
Filing Date	:NA
(62) Divisional to Application Number	:NA
Filing Date	:NA

(71)**Name of Applicant :**
1)TE CONNECTIVITY SOLUTIONS GMBH
Address of Applicant :Mühlenstrasse 26 8200 Schaffhausen Switzerland
(72)**Name of Inventor :**
1)MILLER, Keith Edwin
2)ANNIS, Kyle Gary
3)WEEKS, William Atley
4)THACKSTON, Kevin Michael
5)SIPE, Lynn Robert
6)FLAIG, Robert Charles
7)BENTON, Mark

(57) Abstract :
A backplane connector for mating with a daughter-card connector assembly, said backplane connector having a front and rear orientation and comprising: (a) a retainer block configured for attachment to a backplane and defining a plurality of ferrule slots, each slot configured to receive a ferrule; (b) a plurality of ferrules disposed in said ferrule slots; (c) a plurality of ferrule springs to urge said plurality of ferrules forwardly; and (d) a plurality of ferrule spring retainers for retaining said ferrule springs and being mounted rearward on said retainer block, wherein each ferrule spring retainer retains springs for two or more ferrules.

No. of Pages : 11 No. of Claims : 16

(12) PATENT APPLICATION PUBLICATION
(21) Application No.202547097315 A
(19) INDIA
(22) Date of filing of Application :09/10/2025
(43) Publication Date : 14/11/2025

(54) Title of the invention : CHARGING SYSTEM

(51) International classification	:H02J 13/00, H02J 1/00, H02J 7/00
(31) Priority Document No	:2023-125581
(32) Priority Date	:01/08/2023
(33) Name of priority country	:Japan
(86) International Application No	:PCT/JP2024/023070
Filing Date	:26/06/2024
(87) International Publication No	:WO 2025/028085
(61) Patent of Addition to Application Number	:NA
Filing Date	:NA
(62) Divisional to Application Number	:NA
Filing Date	:NA

(71)**Name of Applicant :**
1)YAZAKI CORPORATION
Address of Applicant :8-15, Konan 1-Chome, Minato-ku, Tokyo 1080075 Japan
(72)**Name of Inventor :**
1)IKEGAYA, Koji

(57) Abstract :
A charging system (1) comprises: a plurality of charging connectors (5) that are disposed on a charging stand (100) for charging a vehicle; a switching unit (10) that is disposed between one charging cable (120) of the charging stand and the plurality of charging connectors; a creation unit for creating a charging schedule of the charging cable on the basis of a charging request from a user by wireless communication; and a control unit (20) for controlling the switching unit on the basis of the created charging schedule, and connecting the charging cable to one charging connector that is connected to a vehicle to be charged.

No. of Pages : 27 No. of Claims : 6

(12) PATENT APPLICATION PUBLICATION
(21) Application No.202547097316 A
(19) INDIA
(22) Date of filing of Application :09/10/2025
(43) Publication Date : 14/11/2025

(54) Title of the invention : SAFETY SYSTEM FOR AN AUTOMATIC STORAGE SYSTEM AND AN AUTOMATIC STORAGE SYSTEM

(51) International classification	:F16P 3/14, B65G 1/127
(31) Priority Document No	:10 2023 109 423.8
(32) Priority Date	:14/04/2023
(33) Name of priority country	:Germany
(86) International Application No	:PCT/EP2024/060028
Filing Date	:12/04/2024
(87) International Publication No	:WO 2024/213734
(61) Patent of Addition to Application Number	:NA
Filing Date	:NA
(62) Divisional to Application Number	:NA
Filing Date	:NA

(71)**Name of Applicant :**
1)KARDEX PRODUKTION DEUTSCHLAND GMBH
Address of Applicant :Megamat-Platz 1 86476 Neuburg/Kammel Germany
(72)**Name of Inventor :**
1)BOUCHÉ, Norbert
2)KOLLMANN, Wolfgang

(57) Abstract :
The invention relates to a safety system (1) for an access station (5) of an automatic storage system (3), which access station is accessible to an operator (9) via an access level (7) and which storage system has a conveyor device (17) for conveying stored goods carriers (11) into and out of a deposit area (13) of the access station (5), wherein the safety system (1) has a primary monitoring device (23) for monitoring the access level (7) and wherein the primary monitoring device (23) is designed to generate a primary alarm (51) when the access level (7) is entered by an object (30) or an operator (9). The invention also relates to a storage system (3) comprising a safety system (1) of this type and a method for operating a storage system (3). According to the invention, in order to avoid dead times without compromising safety, a safety system (1) is provided which is designed to generate a stop signal (53) after a primary alarm (51) has been generated. The safety system (1) is also designed to generate a secondary alarm (61) after a primary alarm (51) has been generated. After initially generating a primary alarm (51) and then a secondary alarm (61), the safety system (1) generates an emergency off signal (69).

No. of Pages : 30 No. of Claims : 21

(12) PATENT APPLICATION PUBLICATION
(21) Application No.202547097320 A
(19) INDIA
(22) Date of filing of Application :09/10/2025
(43) Publication Date : 14/11/2025

(54) Title of the invention : A TANK SHUNT AND A TRANSFORMER PROVIDED WITH SUCH A TANK SHUNT

(51) International classification	:H01F 27/02, H01F 27/34, H01F 27/36, H01F 30/12, H01F 1/44
(31) Priority Document No	:63/459307
(32) Priority Date	:14/04/2023
(33) Name of priority country	:U.S.A.
(86) International Application No	:PCT/EP2024/059976
Filing Date	:12/04/2024
(87) International Publication No	:WO 2024/213707
(61) Patent of Addition to Application Number	:NA
Filing Date	:NA
(62) Divisional to Application Number	:NA
Filing Date	:NA

(71)**Name of Applicant :**
1)HITACHI ENERGY LTD
Address of Applicant :Brown-Boveri-Strasse 5 8050 Zürich Switzerland
(72)**Name of Inventor :**
1)BUSTREO, Gianluca
2)PAOLO, Nicolo

(57) Abstract :
A transformer including an active part (100), a transformer tank (214), and one or more tank shunts (105, 106a, 106b, 106c, 107a, 107b, 218, 300). The active part (100) includes a core (102, 202) and windings (104a, 104b, 104c) around the core (102, 202). The transformer tank (214) includes a tank wall (306), and the transformer tank (214) houses the active part (100) of the transformer. The one or more tank shunts (105, 106a, 106b, 106c, 107a, 107b, 218, 300) are configured to capture a leakage of a magnetic flux (B) from the windings (104a, 104b, 104c), in which the one or more tank shunts (105, 106a, 106b, 106c, 107a, 107b, 218, 300) are arranged between the windings (104a, 104b, 104c) and the tank wall (306). Each one of the one or more tank shunts (105, 106a, 106b, 106c, 107a, 107b, 218, 300) also includes a casing (112, 116, 301), in which the casing (112, 116, 301) of said one or more tank shunts (105, 106a, 106b, 106c, 107a, 107b, 218, 300) houses a magnetic fluid (302).

No. of Pages : 20 No. of Claims : 14

(12) PATENT APPLICATION PUBLICATION
(21) Application No.202547097386 A
(19) INDIA
(22) Date of filing of Application :09/10/2025
(43) Publication Date : 14/11/2025

(54) Title of the invention : UNIT COOLER

(51) International classification	:F24F 13/20, B60H 1/00, B60H 1/32, F24F 1/0323
(31) Priority Document No	:2023-066292
(32) Priority Date	:14/04/2023
(33) Name of priority country	:Japan
(86) International Application No	:PCT/JP2024/001257
Filing Date	:18/01/2024
(87) International Publication No	:WO 2024/214355
(61) Patent of Addition to Application Number	:NA
Filing Date	:NA
(62) Divisional to Application Number	:NA
Filing Date	:NA

(71)**Name of Applicant :**
1)KABUSHIKI KAISHA TOYOTA JIDOSHOKKI
Address of Applicant :2-1, Toyoda-cho, Kariya-shi, Aichi 4488671 Japan
(72)**Name of Inventor :**
1)SHIMADA Satoru
2)KONDO Hisaya
3)WATANABE Ryota
4)ISHIDA Yuta
5)SANO Riichiro

(57) Abstract :
In a unit cooler (1), at least one of a condenser (302) and an evaporator (305) is provided between an undercover (101) and a top cover (104), and has a protrusion (302a) or (305a) that protrudes further outward than a base plate (102) on the opposite side of an adjacent fan (308) or (309). The protrusion (302a) or (305a) is provided with collision mitigation members (108, 117) that mitigate collisions with the undercover (101) or the top cover (104).

No. of Pages : 22 No. of Claims : 7

(12) PATENT APPLICATION PUBLICATION
(21) Application No.202547097387 A
(19) INDIA
(22) Date of filing of Application :09/10/2025
(43) Publication Date : 14/11/2025

(54) Title of the invention : WEARABLE DEVICES WITH MOISTURE MANAGEMENT FEATURES

(51) International classification	:A61B 5/1477, A61B 5/01
(31) Priority Document No	:63/458551
(32) Priority Date	:11/04/2023
(33) Name of priority country	:U.S.A.
(86) International Application No	:PCT/US2024/023080
Filing Date	:04/04/2024
(87) International Publication No	:WO 2024/215557
(61) Patent of Addition to Application Number	:NA
Filing Date	:NA
(62) Divisional to Application Number	:NA
Filing Date	:NA

(71)**Name of Applicant :**
1)LIFELENS TECHNOLOGIES, INC.
Address of Applicant :1 Ivybrook Blvd, Suite 115 Ivyland, PA 18974 U.S.A.
(72)**Name of Inventor :**
1)TOTH, Landy
2)RODGERS, James
3)SPURRI, Amanda
4)CRAIG, Duane

(57) Abstract :
A wearable device includes a substrate having a first surface and a second surface, one or more sensors at least one of embedded in the substrate and attached to the second surface of the substrate, and one or more moisture management features disposed in the substrate. The one or more moisture management features include at least one of: one or more micro-vent holes extending between the first and second surfaces of the substrate; and one or more microfluidic channels extending at least from an interior of the substrate to a perimeter of the substrate.

No. of Pages : 89 No. of Claims : 54

(12) PATENT APPLICATION PUBLICATION
(21) Application No.202547097388 A
(19) INDIA
(22) Date of filing of Application :09/10/2025
(43) Publication Date : 14/11/2025

(54) Title of the invention : EXHAUST GAS PURIFICATION CATALYST

(51) International classification	:B01J 23/63, B01D 53/94, B01J 35/57, F01N 3/10, F01N 3/28
(31) Priority Document No	:2023-043249
(32) Priority Date	:17/03/2023
(33) Name of priority country	:Japan
(86) International Application No	:PCT/JP2024/008535
Filing Date	:06/03/2024
(87) International Publication No	:WO 2024/195544
(61) Patent of Addition to Application Number	:NA
Filing Date	:NA
(62) Divisional to Application Number	:NA
Filing Date	:NA

(71)**Name of Applicant :**
1)MITSUI MINING & SMELTING CO., LTD.
Address of Applicant :1-11-1 Osaki, Shinagawa-ku, Tokyo 1418584 Japan
(72)**Name of Inventor :**
1)MORIYAMA Naoki
2)IWASHINA Katsuya
3)KURAMOCHI Satoru

(57) Abstract :
The purpose of the present invention is to provide an exhaust gas purification catalyst having excellent exhaust gas purification performance. Provided is an exhaust gas purification catalyst (1) comprising substrates (10), first catalyst layers (20) provided on the upstream side of the substrates (10), and second catalyst layers (30) provided on the downstream side of the substrates (10). The first catalyst layers (20) contain a noble metal element and a Ce-Zr-based complex oxide. The second catalyst layers (30) contain a noble metal element and Al2O3. The mass percentage content of Al in the first catalyst layers (20), expressed as Al2O3, is 12 mass% or less. The ratio of the mass percentage content of Al in the first catalyst layers (20), expressed as Al2O3, with respect to the mass percentage content of Al in the second catalyst layers (30), expressed as Al2O3, is 0-0.65.

No. of Pages : 75 No. of Claims : 7

(12) PATENT APPLICATION PUBLICATION
(21) Application No.202547097389 A
(19) INDIA
(22) Date of filing of Application :09/10/2025
(43) Publication Date : 14/11/2025

(54) Title of the invention : METHODS OF DISPERSING ARIPIPRAZOLE INJECTABLE PREPARATIONS

(51) International classification	:A61K 47/02, A61K 47/10, A61K 47/32, A61K 47/38, A61P 25/00
(31) Priority Document No	:PCT/JP2023/010713
(32) Priority Date	:17/03/2023
(33) Name of priority country	:Japan
(86) International Application No	:PCT/JP2024/010147
Filing Date	:15/03/2024
(87) International Publication No	:WO 2024/195704
(61) Patent of Addition to Application Number	:NA
Filing Date	:NA
(62) Divisional to Application Number	:NA
Filing Date	:NA

(71)**Name of Applicant :**
1)OTSUKA PHARMACEUTICAL CO., LTD.
Address of Applicant :2-9, Kanda Tsukasa-machi, Chiyoda-ku, Tokyo 1018535 Japan
(72)**Name of Inventor :**
1)NAKAMURA, Kazuya
2)SAKAMOTO, Yoko
3)KANEKO, Daiki

(57) Abstract :
The present disclosure is directed to methods of dispersing injectable preparations comprising aripiprazole or a salt thereof. Methods of enhancing slidability of containers comprising long-acting injectable preparations comprising aripiprazole or a salt thereof, the methods comprising dispersing ingredients comprised in the preparations before administration, aripiprazole injectable preparations to be administered after the dispersion, methods of administration thereof, and use thereof are provided.

No. of Pages : 22 No. of Claims : 14

(12) PATENT APPLICATION PUBLICATION
(21) Application No.202547097404 A
(19) INDIA
(22) Date of filing of Application :09/10/2025
(43) Publication Date : 14/11/2025

(54) Title of the invention : A SYSTEM COMPRISING A LIGHTING DEVICE

(51) International classification	:F21V 17/00, F21V 17/10, F21V 17/16, F21V 23/00, F16B 5/07
(31) Priority Document No	:23175949.9
(32) Priority Date	:30/05/2023
(33) Name of priority country	:EPO
(86) International Application No	:PCT/EP2024/063792
Filing Date	:17/05/2024
(87) International Publication No	:WO 2024/245791
(61) Patent of Addition to Application Number	:NA
Filing Date	:NA
(62) Divisional to Application Number	:NA
Filing Date	:NA

(71)**Name of Applicant :**
1)SIGNIFY HOLDING B.V.
Address of Applicant :High Tech Campus 48 5656 AE Eindhoven Netherlands
(72)**Name of Inventor :**
1)BOOIJ, Silvia, Maria
2)VREHEN, Joris, Jan
3)BUKKEMS, Peter, Johannes, Martinus

(57) Abstract :
A system (100) is disclosed, comprising a component (10, 20) and a lighting device comprising a housing (30). A surface of the housing (30) comprises at least one first mounting portion (31), and an outer surface of the component (10) comprises at least one second mounting portion (11, 21). The at least one first mounting portion (31) comprises a first plurality of engaging elements (40) monolithically integrated in or on the housing (30) and projecting therefrom, and/or the at least one second mounting portion (11, 21) comprises a second plurality of engaging elements (50) monolithically integrated in or on the component (10), projecting therefrom. By means of the first plurality of engaging elements (40) and/or the at least one second mounting portion (11, 21), the component (10) can be detachably mounted in or on the housing (30).

No. of Pages : 15 No. of Claims : 15

(12) PATENT APPLICATION PUBLICATION
(21) Application No.202547097405 A
(19) INDIA
(22) Date of filing of Application :09/10/2025
(43) Publication Date : 14/11/2025

(54) Title of the invention : COB HOLDER

(51) International classification	:F21V 19/00, H01R 4/48, H01R 12/51, H01R 12/53, H01R 43/16
(31) Priority Document No	:PCT/CN2023/095106
(32) Priority Date	:18/05/2023
(33) Name of priority country	:China
(86) International Application No	:PCT/EP2024/062686
Filing Date	:08/05/2024
(87) International Publication No	:WO 2024/235778
(61) Patent of Addition to Application Number	:NA
Filing Date	:NA
(62) Divisional to Application Number	:NA
Filing Date	:NA

(71)**Name of Applicant :**
1)SIGNIFY HOLDING B.V.
Address of Applicant :High Tech Campus 48 5656 AE Eindhoven Netherlands
(72)**Name of Inventor :**
1)CHEN, Feihong
2)QIN, Hexi
3)JIANG, Lei

(57) Abstract :
A CoB holder (130) comprising a holding structure for a chip-on-board (CoB) light source, at least one terminal positioning slot (140) configured to receive a terminal, and at least one terminal (120) received within a respective terminal positioning slot. The at least one terminal comprises a receiving portion (121) for receiving a wire, a contact portion (122) that for making electrical contact with a CoB light source held by the CoB holder, and a connecting portion (123) connecting the receiving portion to the contact portion. The connecting portion is a twisted plate-shaped portion.

No. of Pages : 9 No. of Claims : 14

(12) PATENT APPLICATION PUBLICATION
(21) Application No.202547097406 A
(19) INDIA
(22) Date of filing of Application :09/10/2025
(43) Publication Date : 14/11/2025

(54) Title of the invention : AN LED DRIVING ARRANGEMENT

(51) International classification	:H05B 45/355, H05B 45/3725, H05B 45/36, H02M 1/00, H02M 1/15
(31) Priority Document No	:PCT/CN2023/094510
(32) Priority Date	:16/05/2023
(33) Name of priority country	:China
(86) International Application No	:PCT/EP2024/062678
Filing Date	:08/05/2024
(87) International Publication No	:WO 2024/235775
(61) Patent of Addition to Application Number	:NA
Filing Date	:NA
(62) Divisional to Application Number	:NA
Filing Date	:NA

(71)**Name of Applicant :**
1)SIGNIFY HOLDING B.V.
Address of Applicant :High Tech Campus 48 5656 AE Eindhoven Netherlands
(72)**Name of Inventor :**
1)FU, Jie
2)CHEN, Zhiquan
3)ZHOU, Haiying
4)WANG, Gang

(57) Abstract :
Provided is driving arrangement for LED lighting that adaptively adjusts output voltage of a power factor correction (PFC) circuit to improve total harmonic distortion (THD), improve efficiency, and extend dimming performance. More particularly, the PFC circuit and an auxiliary switched mode power supply (SMPS) with outputs connected in series superimposes their outputs to a load, the PFC circuit also changes its output amplitude modulation modes responsive to an input rectified AC voltage in a sub-optimal range which can not satisfy an operating condition, between the rectified AC voltage and the PFC output voltage, of the PFC circuit. Accordingly, with the changed output amplitude modulation the operating condition is satified and the PFC circuit may maintain normal operation for a larger amount of time in the cycle of the rectified AC input voltage. And the auxiliary switched mode power supply also changes its output amplitude modulation modes and helps to keep the total output to the load constant.

No. of Pages : 22 No. of Claims : 14

(12) PATENT APPLICATION PUBLICATION
(21) Application No.202547097407 A
(19) INDIA
(22) Date of filing of Application :09/10/2025
(43) Publication Date : 14/11/2025

(54) Title of the invention : EDGE-LIT LIGHT FIXTURE WITHOUT A WAVEGUIDE

(51) International classification	:F21S 8/04, F21V 7/00, F21V 7/04, F21Y 107/10, F21Y 115/10
(31) Priority Document No	:63/464980
(32) Priority Date	:09/05/2023
(33) Name of priority country	:U.S.A.
(86) International Application No	:PCT/EP2024/060938
Filing Date	:22/04/2024
(87) International Publication No	:WO 2024/231086
(61) Patent of Addition to Application Number	:NA
Filing Date	:NA
(62) Divisional to Application Number	:NA
Filing Date	:NA

(71)**Name of Applicant :**
1)SIGNIFY HOLDING B.V.
Address of Applicant :High Tech Campus 48 5656 AE Eindhoven Netherlands
(72)**Name of Inventor :**
1)WINTERS, Philip, Dean
2)SAYERS, Wilston, Nigel, Christopher

(57) Abstract :
An edge-light light fixture (100) can include a housing (140) having a side wall (141) and a top wall (142) that form a cavity (145). The light fixture can also include a circuit board assembly (120) disposed on the side wall (141) of the housing. The light fixture can also include an optical device (130) coupled to a distal end of the side wall (141) of the housing, where the optical device (130) closes off the open bottom end of the cavity. The light fixture can also include a reflector (110) disposed in the cavity, where the reflector (110) has a convex curvature (115) along a height (114) between a top end (117) and a bottom end (116), where the bottom end (116) of the reflector (110) is positioned proximate to a junction of the optical device (130) and the distal end of the side wall (141), where the top end (117) of the reflector is positioned in the cavity (145) at a horizontal distance (192) away from the circuit board (121).

No. of Pages : 31 No. of Claims : 14

(12) PATENT APPLICATION PUBLICATION
(21) Application No.202547097408 A
(19) INDIA
(22) Date of filing of Application :09/10/2025
(43) Publication Date : 14/11/2025

(54) Title of the invention : ULTRA-EFFICIENT DIMMABLE LED DRIVER WITH SWITCHABLE LED LOAD

(51) International classification	:H05B 45/10, H05B 45/20
(31) Priority Document No	:23172780.1
(32) Priority Date	:11/05/2023
(33) Name of priority country	:EPO
(86) International Application No	:PCT/EP2024/062350
Filing Date	:03/05/2024
(87) International Publication No	:WO 2024/231310
(61) Patent of Addition to Application Number	:NA
Filing Date	:NA
(62) Divisional to Application Number	:NA
Filing Date	:NA

(71)**Name of Applicant :**
1)SIGNIFY HOLDING B.V.
Address of Applicant :High Tech Campus 48 5656 AE Eindhoven Netherlands
(72)**Name of Inventor :**
1)ZIJLMAN, Theo, Gerrit
2)HORIKX, Werner, Friedrich
3)VAN EEUWIJK, Alexander, Henricus, Waltherus
4)HONTELE, Bertrand, Johan, Edward
5)ARULANDU, Karnekumar
6)TAO, Haimin

(57) Abstract :
The invention relates to a lighting apparatus comprising a light source having a parallel or a series configuration of a first sub-load and a second sub-load, a first driver adapted to provide power to the light source, a second driver adapted to provide power to the light source, a controller adapted to receive a dimming signal and adapted to allow or deny a power to be provided by the first driver and/or the second driver to the light source based on the dimming level and a control circuit adapted to receive a control signal, wherein the control circuit is arranged to activate and deactivate the first sub-load and the second sub- load based on the control signal.

No. of Pages : 24 No. of Claims : 15

(12) PATENT APPLICATION PUBLICATION
(21) Application No.202547097417 A
(19) INDIA
(22) Date of filing of Application :09/10/2025
(43) Publication Date : 14/11/2025

(54) Title of the invention : SHARING SECURE USER INFORMATION USING NEAR-FIELD COMMUNICATION

(51) International classification	:G06F 21/62, G16H 10/60, H04L 9/00, H04W 4/80
(31) Priority Document No	:63/501742
(32) Priority Date	:12/05/2023
(33) Name of priority country	:U.S.A.
(86) International Application No	:PCT/US2024/021921
Filing Date	:28/03/2024
(87) International Publication No	:WO 2024/238023
(61) Patent of Addition to Application Number	:NA
Filing Date	:NA
(62) Divisional to Application Number	:NA
Filing Date	:NA

(71)**Name of Applicant :**
1)ORACLE INTERNATIONAL CORPORATION
Address of Applicant :500 Oracle Parkway Mail Stop 5OP7 Redwood Shores, California 94065 U.S.A.
(72)**Name of Inventor :**
1)ANKROM, Zachary S.
2)BAJEC, Jan
3)DREWETTE, David Allan James

(57) Abstract :
Embodiments permit secure information exchange using lightweight data and near-field communication (NFC). A user can transmit lightweight data, such as one or more indicators (e.g., user indicator, scope indicator(s), documents indicator(s), etc.), to a receiving computing system via the user's wireless device and an NFC protocol. Because NFC transmissions are performed by co-located devices, this lightweight data transmission can trigger and/or continue a sophisticated workflow. For example, the receiving computing system can be associated with a product or service provider, and the lightweight data transmission can progress a workflow related to a particular product and/or service. The workflow progression can include accessing secure user information via the indicator(s) received over the NFC transmission.

No. of Pages : 39 No. of Claims : 12

(12) PATENT APPLICATION PUBLICATION
(21) Application No.202547097418 A
(19) INDIA
(22) Date of filing of Application :09/10/2025
(43) Publication Date : 14/11/2025

(54) Title of the invention : ORAL CARE COMPOSITION FOR INCREASING SELF CONFIDENCE

(51) International classification	:A61K 8/42, A61Q 11/00
(31) Priority Document No	:2303792.2
(32) Priority Date	:15/03/2023
(33) Name of priority country	:U.K.
(86) International Application No	:PCT/EP2024/056834
Filing Date	:14/03/2024
(87) International Publication No	:WO 2024/189149
(61) Patent of Addition to Application Number	:NA
Filing Date	:NA
(62) Divisional to Application Number	:NA
Filing Date	:NA

(71)**Name of Applicant :**
1)GIVAUDAN SA
Address of Applicant :Chemin de la Parfumerie 5 1214 Vernier Switzerland
(72)**Name of Inventor :**
1)WATKINS, Stephen, David
2)AKINYI, Lucy

(57) Abstract :
The present invention relates to use of an oral care composition comprising (1R,2S,5R)-N-(4- cyanomethylphenyl)-p-menthane carboxamide to increase the level and/or duration of an individual's self-confidence.

No. of Pages : 16 No. of Claims : 8

(12) PATENT APPLICATION PUBLICATION
(21) Application No.202547097420 A
(19) INDIA
(22) Date of filing of Application :09/10/2025
(43) Publication Date : 14/11/2025

(54) Title of the invention : T-CELL RECEPTOR FOR HPV-SPECIFIC CYTOTOXIC T-CELL, OR FUNCTIONAL FRAGMENT THEREOF

(51) International classification	:C07K 14/725, A61K 35/17, A61K 35/545, A61P 35/00, C12N 5/10
(31) Priority Document No	:2023-042024
(32) Priority Date	:16/03/2023
(33) Name of priority country	:Japan
(86) International Application No	:PCT/JP2024/010248
Filing Date	:15/03/2024
(87) International Publication No	:WO 2024/190905
(61) Patent of Addition to Application Number	:NA
Filing Date	:NA
(62) Divisional to Application Number	:NA
Filing Date	:NA

(71)**Name of Applicant :**
1)JUNTENDO EDUCATIONAL FOUNDATION
Address of Applicant :2-1-1, Hongo, Bunkyo-ku, Tokyo 1138421 Japan
(72)**Name of Inventor :**
1)ANDO, Miki
2)ISHII, Midori
3)ANDO, Jun
4)NAKAUCHI, Hiromitsu

(57) Abstract :
The present invention provides a T-cell receptor, or a functional fragment thereof, that has an excellent antitumor effect, by cloning a T-cell receptor for an HPV16E6-specific cytotoxic T-cell. This T-cell receptor for an HPV16E6-specific cytotoxic T-cell, or a functional fragment thereof, has an a chain CDR3 region that comprises the amino acid sequence represented by SEQ ID NO:3 or an amino acid sequence resulting from substituting, deleting, or adding 1-3 amino acids in said amino acid sequence, and a ß chain CDR3 region that comprises the amino acid sequence represented by SEQ ID NO:8 or an amino acid sequence resulting from substituting, deleting, or adding 1-3 amino acids in said amino acid sequence.

No. of Pages : 27 No. of Claims : 26

(12) PATENT APPLICATION PUBLICATION
(21) Application No.202547097440 A
(19) INDIA
(22) Date of filing of Application :09/10/2025
(43) Publication Date : 14/11/2025

(54) Title of the invention : VEHICLE SEAT ASSEMBLY

(51) International classification	:B60N 2/54, B60N 2/58
(31) Priority Document No	:63/490506
(32) Priority Date	:15/03/2023
(33) Name of priority country	:U.S.A.
(86) International Application No	:PCT/IB2024/052561
Filing Date	:15/03/2024
(87) International Publication No	:WO 2024/189606
(61) Patent of Addition to Application Number	:NA
Filing Date	:NA
(62) Divisional to Application Number	:NA
Filing Date	:NA

(71)**Name of Applicant :**
1)PROPRIETECT L.P.
Address of Applicant :100 King Street West, Suite 1600 1 First Canadian Place Toronto, Ontario M5X 1G5 Canada
(72)**Name of Inventor :**
1)WEIERSTALL, Mark D.
2)DONG, Kevin Liping
3)CAPPUCCITTI, Andrew
4)SKRABUT, Todd
5)HOJNACKI, Henry Edward

(57) Abstract :
The subject disclosure provides a vehicle seat assembly comprising a seat component having a support surface, a foam layer, and a formed cloth. The foam layer has an A-surface and a B-surface. The formed cloth has an inner surface and an outer surface with the inner surface attached to the B-surface of the foam layer. The formed cloth comprises a plurality of fibers shaped to define a plurality of suspension springs each having a pre-defined 3- dimensional configuration defining a cavity. Each cavity is filled with a portion of the foam layer and the foam layer at least partially penetrates the formed cloth between the inner and outer surfaces to further define the suspension springs and to maintain the pre-defined 3- dimensional configurations of the suspension springs. A portion of the outer surface of the formed cloth on the suspension springs engages the support surface of the seat component. The suspension springs respond to dynamic input by partially deflecting to a deflected state and recovering to an initial state relative to the support surface of the seat component for isolating vibrations of an occupant during use of the vehicle seat assembly.

No. of Pages : 17 No. of Claims : 35

(12) PATENT APPLICATION PUBLICATION
(21) Application No.202547097441 A
(19) INDIA
(22) Date of filing of Application :09/10/2025
(43) Publication Date : 14/11/2025

(54) Title of the invention : DAUGHTER-CARD OPTICAL BACKPLANE CONNECTOR SYSTEM

(51) International classification	:G02B 6/38, G02B 6/42, G02B 6/43
(31) Priority Document No	:63/452385
(32) Priority Date	:15/03/2023
(33) Name of priority country	:U.S.A.
(86) International Application No	:PCT/IB2024/052548
Filing Date	:15/03/2024
(87) International Publication No	:WO 2024/189599
(61) Patent of Addition to Application Number	:NA
Filing Date	:NA
(62) Divisional to Application Number	:NA
Filing Date	:NA

(71)**Name of Applicant :**
1)TE CONNECTIVITY SOLUTIONS GMBH
Address of Applicant :Mühlenstrasse 26 8200 Schaffhausen Switzerland
(72)**Name of Inventor :**
1)MILLER, Keith Edwin
2)ANNIS, Kyle Gary
3)WEEKS, William Atley
4)THACKSTON, Kevin Michael
5)SIPE, Lynn Robert
6)FLAIG, Robert Charles
7)BENTON, Mark

(57) Abstract :
A daughter-card connector assembly comprising: (a) a housing defining a first plane configured for mounting parallel to a backplane, and a second plane for mounting parallel to a daughter card, and a plurality of parallel slots perpendicular to said first plane; and (b) one or more opto- electric cards, each of said one or more opto-electric cards disposed in one of said plurality of slots, and comprising at least, (i) a printed circuit board (PCB) defining at least a first edge and a second edge, wherein, when said opto-electric card is mounted in said slot, said first edge is parallel to said first plane and said second edge is parallel to said second plane; (ii) a blind-mate optical connector along said first edge; (iii) an electrical interface along said second edge; (iv) at least one optical component mounted on said PCB for converting between electrical and optical signals, said PCB being electrically connected to at least a portion of said electrical interface; and (v) one or more waveguides connecting said optical component with said optical connector.

No. of Pages : 12 No. of Claims : 34

(12) PATENT APPLICATION PUBLICATION
(21) Application No.202547097456 A
(19) INDIA
(22) Date of filing of Application :09/10/2025
(43) Publication Date : 14/11/2025

(54) Title of the invention : IMAGE FORMATION DEVICE

(51) International classification	:G03G 21/16, G03G 15/08, G03G 21/00
(31) Priority Document No	:2023-051815
(32) Priority Date	:28/03/2023
(33) Name of priority country	:Japan
(86) International Application No	:PCT/JP2024/011850
Filing Date	:26/03/2024
(87) International Publication No	:WO 2024/204141
(61) Patent of Addition to Application Number	:NA
Filing Date	:NA
(62) Divisional to Application Number	:NA
Filing Date	:NA

(71)**Name of Applicant :**
1)CANON KABUSHIKI KAISHA
Address of Applicant :30-2, Shimomaruko 3-chome, Ohta-ku, Tokyo 1468501 Japan
(72)**Name of Inventor :**
1)NITTA Jumpei
2)TATEISHI Tomoya
3)SASAOKA Osamu
4)KOGUCHI Kohei
5)HIASA Shuma
6)KAWAI Tachio
7)WATANABE Kenji

(57) Abstract :
An image formation device according to the present invention has a rotary body that comprises a first development chamber and a second development chamber, a first cartridge that has a first cartridge display part and supplies a first developer to the first development chamber, a second cartridge that has a second cartridge display part and supplies a second developer to the second development chamber, a first tray that has a first tray display part and can removably support the first cartridge, and a second tray that has a second tray display part and can removably support the second cartridge. The hue of the first cartridge display part is closer to the hue of the first tray display part than the hue of the second tray display part, and the hue of the second cartridge display part is closer to the hue of the second tray display part than the hue of the first tray display part.

No. of Pages : 267 No. of Claims : 15

(12) PATENT APPLICATION PUBLICATION
(21) Application No.202547097457 A
(19) INDIA
(22) Date of filing of Application :09/10/2025
(43) Publication Date : 14/11/2025

(54) Title of the invention : THE COMPOSITION AND THERMAL CURABLE ADHESIVE FILM DERIVED THEREOF

(51) International classification	:C09J 175/04, C08G 18/79, C08G 18/48, C09J 175/06, C09J 175/12
(31) Priority Document No	:NA
(32) Priority Date	:NA
(33) Name of priority country	:NA
(86) International Application No	:PCT/CN2023/081533
Filing Date	:15/03/2023
(87) International Publication No	:WO 2024/187396
(61) Patent of Addition to Application Number	:NA
Filing Date	:NA
(62) Divisional to Application Number	:NA
Filing Date	:NA

(71)**Name of Applicant :**
1)HENKEL AG & CO. KGAA
Address of Applicant :Henkelstrasse 67 Duesseldorf 40589 Germany
(72)**Name of Inventor :**
1)LUO, Yizhong
2)SHEN, Dongmei

(57) Abstract :
A composition and a thermal curable adhesive film derived thereof. The thermal curable adhesive film can be activatable at low temperature (lower than 100?, preferably from 60? to 80?) and is capable of being self-supported and exhibiting excellent bonding strength when cured.

No. of Pages : 24 No. of Claims : 16

(12) PATENT APPLICATION PUBLICATION
(21) Application No.202547097458 A
(19) INDIA
(22) Date of filing of Application :09/10/2025
(43) Publication Date : 14/11/2025

(54) Title of the invention : SYNTHESIS OF HYDROGEN GAS BY FLASH JOULE HEATING

(51) International classification	:C10B 19/00, C10B 53/02, C10B 53/07, C10B 57/06, C10B 57/16
(31) Priority Document No	:63/452069
(32) Priority Date	:14/03/2023
(33) Name of priority country	:U.S.A.
(86) International Application No	:PCT/US2024/019867
Filing Date	:14/03/2024
(87) International Publication No	:WO 2024/215434
(61) Patent of Addition to Application Number	:NA
Filing Date	:NA
(62) Divisional to Application Number	:NA
Filing Date	:NA

(71)**Name of Applicant :**
1)WILLIAM MARSH RICE UNIVERSITY
Address of Applicant :6100 Main Street Houston, Texas 77005 U.S.A.
(72)**Name of Inventor :**
1)TOUR, James M.
2)WYSS, Kevin
3)CHENG, Yi
4)SILVA, Karla J.
5)EDDY, Lucas

(57) Abstract :
Method and systems for the synthesis of hydrogen gas by flash Joule heating, such as synthesizing hydrogen gas from waste plastic materials, other solid materials, or liquid materials by flash Joule heating.

No. of Pages : 35 No. of Claims : 19

(12) PATENT APPLICATION PUBLICATION
(21) Application No.202547097467 A
(19) INDIA
(22) Date of filing of Application :09/10/2025
(43) Publication Date : 14/11/2025

(54) Title of the invention : HEALTH METRICS ASSOCIATED WITH CLOUD SERVICES

(51) International classification	:G06F 9/50, G06F 11/30, G06F 11/32, H04L 43/045
(31) Priority Document No	:63/462875
(32) Priority Date	:28/04/2023
(33) Name of priority country	:U.S.A.
(86) International Application No	:PCT/US2024/026800
Filing Date	:29/04/2024
(87) International Publication No	:WO 2024/227151
(61) Patent of Addition to Application Number	:NA
Filing Date	:NA
(62) Divisional to Application Number	:NA
Filing Date	:NA

(71)**Name of Applicant :**
1)ORACLE INTERNATIONAL CORPORATION
Address of Applicant :500 Oracle Parkway, M/S 50P7 Redwood Shores, California 94065 U.S.A.
(72)**Name of Inventor :**
1)BERG, Daniel
2)PETERSON, Eric
3)FOX, Kenneth Richard
4)MORAN, William Nickolas
5)LEUNG, Wai Ho

(57) Abstract :
Techniques for monitoring the health of services of a system are disclosed. A system determines a health metric for a service in a cloud environment. Additionally, the system determines a first service feature of the service and a plurality of downstream service features that depend on the first service feature. The system determines an impact weight for the first service based on the plurality of downstream service features. Additionally, the system computes a weighted health metric for the service at least by applying the impact weight to the health metric. The system generates a visual representation that includes the weighted health metric for display on a service health interface.

No. of Pages : 84 No. of Claims : 13

(12) PATENT APPLICATION PUBLICATION
(21) Application No.202547097476 A
(19) INDIA
(22) Date of filing of Application :09/10/2025
(43) Publication Date : 14/11/2025

(54) Title of the invention : ROUTE IDENTIFIER ALLOCATION FOR MULTI-HOP USER EQUIPMENT-TO-NETWORK RELAY

(51) International classification	:H04W 40/22, H04W 8/00, H04W 8/26, H04W 40/24, H04W 88/04
(31) Priority Document No	:NA
(32) Priority Date	:NA
(33) Name of priority country	:NA
(86) International Application No	:PCT/CN2023/099047
Filing Date	:08/06/2023
(87) International Publication No	:WO 2024/250214
(61) Patent of Addition to Application Number	:NA
Filing Date	:NA
(62) Divisional to Application Number	:NA
Filing Date	:NA

(71)**Name of Applicant :**
1)QUALCOMM INCORPORATED
Address of Applicant :5775 Morehouse Drive, San Diego California 92121-1714 U.S.A.
(72)**Name of Inventor :**
1)LIU, Jianhua
2)CHENG, Hong
3)PALADUGU, Karthika
4)KRISHNAN, Shankar

(57) Abstract :
In an aspect, a UE may obtain a first route ID for a first route between the first UE and a second UE. The UE may receive, from the second UE, a data packet originating from a third UE, the data packet indicating the first route ID. The UE may identify the third UE based on the first route ID indicated in the data packet. In another aspect, a network node may obtain a route ID for at least one first route between the network node and a first UE. The network node may receive an indication that data packets received by the network node are received via a multi-hop route. The network node may receive, from the first UE, a data packet originating from a second UE based on the route ID and the indication.

No. of Pages : 55 No. of Claims : 30

(12) PATENT APPLICATION PUBLICATION
(21) Application No.202547097485 A
(19) INDIA
(22) Date of filing of Application :09/10/2025
(43) Publication Date : 14/11/2025

(54) Title of the invention : ACCESSING CLOUD ENVIRONMENTS THROUGH ADMINISTRATIVE TENANCIES TO COMPLY WITH SOVEREIGNTY REQUIREMENTS

(51) International classification :G06F 9/50
(31) Priority Document No :63/462880
(32) Priority Date :28/04/2023
(33) Name of priority country :U.S.A.
(86) International Application No :PCT/US2024/026904
Filing Date :29/04/2024
(87) International Publication No :WO 2024/227197
(61) Patent of Addition to Application Number :NA
Filing Date :NA
(62) Divisional to Application Number :NA
Filing Date :NA

(71)**Name of Applicant :**
1)ORACLE INTERNATIONAL CORPORATION
Address of Applicant :500 Oracle Parkway, M/S 50P7 Redwood Shores, California 94065 U.S.A.
(72)**Name of Inventor :**
1)POTLAPALLY, Nachiketh Rao
2)LINACRE, Christian A.
3)AWASTHI, Apurv
4)ASEEJA, Harsh
5)LUO, Qingyang

(57) Abstract :
Techniques for providing user access to cloud environments through an administrative tenancy to comply with sovereignty requirements are disclosed. The administrative tenancy is one of multiple tenancies in the cloud environment. The administrative tenancy includes tools for communicating with services running outside of the administrative tenancy. The user may only be able to access these services through the administrative tenancy. User access to the administrative tenancy requires the user to satisfy one or more sovereignty requirements. After determining that the user satisfies the sovereignty requirements for the cloud environment, the system grants the user access to the tools within the administrative tenancy to communicate with services outside the administrative tenancy.

No. of Pages : 54 No. of Claims : 21

(12) PATENT APPLICATION PUBLICATION
(21) Application No.202547097500 A
(19) INDIA
(22) Date of filing of Application :09/10/2025
(43) Publication Date : 14/11/2025

(54) Title of the invention : OBTAINING DEPLOYMENT TOKENS FOR DEPLOYING ARTIFACTS TO A CLOUD ENVIRONMENT

(51) International classification	:G06F 9/50, G06F 8/60, G06Q 10/0631
(31) Priority Document No	:63/462875
(32) Priority Date	:28/04/2023
(33) Name of priority country	:U.S.A.
(86) International Application No	:PCT/US2024/026885
Filing Date	:29/04/2024
(87) International Publication No	:WO 2024/227188
(61) Patent of Addition to Application Number	:NA
Filing Date	:NA
(62) Divisional to Application Number	:NA
Filing Date	:NA

(71)**Name of Applicant :**
1)ORACLE INTERNATIONAL CORPORATION
Address of Applicant :500 Oracle Parkway, M/S 50P7 Redwood Shores, California 94065 U.S.A.
(72)**Name of Inventor :**
1)SHILMOVER, Barry

(57) Abstract :
Techniques for deploying artifacts to a computing environment are disclosed. A system includes an artifact deployment tool. The artifact deployment tool determines that an artifact is available for deployment to a target computing environment. The artifact deployment tool obtains a deployment token representing verification that a set of one or more customer designated conditions are satisfied to deploy the artifact to the target computing environment. The artifact deployment tool generates a deployment request to deploy the artifact to the target computing environment. The deployment request includes the deployment token. The artifact deployment tool directs the deployment request to a deployment service for deploying artifacts to the target computing environment. The deployment service obtains validation of the deployment token and, responsive to obtaining validation of the deployment token, deploys the artifact to the target computing environment.

No. of Pages : 75 No. of Claims : 21

(12) PATENT APPLICATION PUBLICATION
(21) Application No.202547097577 A
(19) INDIA
(22) Date of filing of Application :09/10/2025
(43) Publication Date : 14/11/2025

(54) Title of the invention : LARGE CONICAL NANOPORES AND USES THEREOF IN ANALYTE SENSING

(51) International classification	:C07K 14/31, C12Q 1/6804, G01N 33/487
(31) Priority Document No	:23165582.0
(32) Priority Date	:30/03/2023
(33) Name of priority country	:EPO
(86) International Application No	:PCT/NL2024/050161
Filing Date	:02/04/2024
(87) International Publication No	:WO 2024/205413
(61) Patent of Addition to Application Number	:NA
Filing Date	:NA
(62) Divisional to Application Number	:NA
Filing Date	:NA

(71)**Name of Applicant :**
1)RIJKSUNIVERSITEIT GRONINGEN
Address of Applicant :Broerstraat 5 9712CP Groningen Netherlands
(72)**Name of Inventor :**
1)MAGLIA, Giovanni
2)YELLESWARAPU, Maaruthy
3)WLOKA, Carsten
4)STRAATHOF, Sabine

(57) Abstract :
The invention relates to proteinaceous nanopores, nanopore systems and devices, and their application in single molecule analysis, such as detecting the presence, concentration and/or identity of a clinically relevant analyte in a complex sample. Provided is a sensor system comprising a nanopore embedded in an amphipathic or hydrophobic membrane separating a fluid filled chamber into a cis side and a trans side, wherein the nanopore is a conical shaped proteinaceous nanopore having a cis entrance of at least 11 nm, preferably about 12 to 20 nm, and a trans constriction of less than 5 nm, preferably about 2 to 4 nm.

No. of Pages : 229 No. of Claims : 132

(12) PATENT APPLICATION PUBLICATION
(21) Application No.202547097597 A
(19) INDIA
(22) Date of filing of Application :09/10/2025
(43) Publication Date : 14/11/2025

(54) Title of the invention : COMMUNICATION METHOD AND COMMUNICATION APPARATUS

(51) International classification	:H04B 7/06	(71)**Name of Applicant :**
(31) Priority Document No	:202310396390.8	**1)HUAWEI TECHNOLOGIES CO., LTD.**
(32) Priority Date	:06/04/2023	Address of Applicant :Huawei Administration Building, Bantian, Longgang
(33) Name of priority country	:China	Shenzhen, Guangdong 518129 China
(86) International Application No	:PCT/CN2024/085915	(72)**Name of Inventor :**
Filing Date	:03/04/2024	**1)CHAI, Xiaomeng**
(87) International Publication No	:WO 2024/208296	**2)TIAN, Yang**
(61) Patent of Addition to Application Number	:NA	**3)LIU, Lifu**
Filing Date	:NA	**4)LI, Yuan**
(62) Divisional to Application Number	:NA	**5)SUN, Yan**
Filing Date	:NA	

(57) Abstract :
Provided in the embodiments of the present application are a communication method and a communication apparatus. The method comprises: generating a piece of first channel information, the first channel information comprising K segments, K being an integer greater than 1, the length of each segment among the K segments being less than or equal to a first threshold value, the type of the first channel information being truth value channel information, and the first channel information being any one of the following: a channel response, an eigenvector matrix of a channel, a precoding matrix, a reference signal receiving power, or a signal-to-interference-plus-noise ratio; and transmitting some or all of K pieces of uplink control information (UCI) to a network device, the K pieces of UCI respectively comprising the K segments. The solution of the embodiments of the present application can be applied to communication systems having an AI/ML function, enabling network devices to acquire channel information having relatively high precision.

No. of Pages : 146 No. of Claims : 44

(12) PATENT APPLICATION PUBLICATION
(21) Application No.202547097703 A
(19) INDIA
(22) Date of filing of Application :10/10/2025
(43) Publication Date : 14/11/2025

(54) Title of the invention : CELL EDGE PREDICTOR FOR OPTIMIZED ROAMING

(51) International classification	:H04W 36/00, H04W 36/32, H04W 84/12
(31) Priority Document No	:63/489908
(32) Priority Date	:13/03/2023
(33) Name of priority country	:U.S.A.
(86) International Application No	:PCT/US2024/019647
Filing Date	:13/03/2024
(87) International Publication No	:WO 2024/192070
(61) Patent of Addition to Application Number	:NA
Filing Date	:NA
(62) Divisional to Application Number	:NA
Filing Date	:NA

(71)**Name of Applicant :**
1)CISCO TECHNOLOGY, INC.
Address of Applicant :170 West Tasman Drive San Jose, California 95134-1706 U.S.A.
(72)**Name of Inventor :**
1)HENRY, Jerome
2)LOVISON, Federico
3)BARTON, Robert E.
4)DASGUPTA, Sukrit

(57) Abstract :
Cell edge prediction for optimized roaming may be provided. Cell edge prediction can include predicting cell edges for a plurality of APs including a connected AP and one or more additional APs. A cell edge prediction can be for a client connected to the connected AP. The cell edge prediction may comprise an indication of one or more candidate APs for the client to roam to of the one or more additional APs and an estimated time the client will reach the cell edge of the connected AP. After generating the cell edge prediction, the cell edge prediction can be transmitted to the client.

No. of Pages : 19 No. of Claims : 15

(12) PATENT APPLICATION PUBLICATION
(21) Application No.202547097729 A
(19) INDIA
(22) Date of filing of Application :10/10/2025
(43) Publication Date : 14/11/2025

(54) Title of the invention : CONSENT-DRIVEN ACCESS MANAGEMENT FOR CLOUD RESOURCES

(51) International classification	:G06F 9/46, G06F 9/50, H04L 9/40, G06Q 10/0631
(31) Priority Document No	:63/462875
(32) Priority Date	:28/04/2023
(33) Name of priority country	:U.S.A.
(86) International Application No	:PCT/US2024/026840
Filing Date	:29/04/2024
(87) International Publication No	:WO 2024/227166
(61) Patent of Addition to Application Number	:NA
Filing Date	:NA
(62) Divisional to Application Number	:NA
Filing Date	:NA

(71)**Name of Applicant :**
1)ORACLE INTERNATIONAL CORPORATION
Address of Applicant :500 Oracle Parkway, M/S 50P7 Redwood Shores, California 94065 U.S.A.
(72)**Name of Inventor :**
1)ELMENSHAWY, Ayman Mohamed Aly Hassan
2)VOGEL, Daniel M.

(57) Abstract :
Techniques for consent-driven access management include: receiving, from a requestor, a request for consent for an actor to access a target set of resources in a cloud environment; identifying a consent workflow that specifies a name and/or an attribute of a set of one or more users from which to obtain respective approvals of the consent request; traversing the consent workflow to obtain the respective approvals from the set of one or more users; determining that one or more access policies, separate from the consent workflow, permit the actor to access the target set of resources; where access by the actor to the target set of resources is conditioned on both (a) obtaining the respective approvals from the set of one or more users and (b) determining that the one or more access policies, separate from the consent workflow, permit the actor to access the target set of resources.

No. of Pages : 48 No. of Claims : 21

(12) PATENT APPLICATION PUBLICATION
(21) Application No.202547097749 A
(19) INDIA
(22) Date of filing of Application :10/10/2025
(43) Publication Date : 14/11/2025

(54) Title of the invention : BULK SWEETENER SYSTEMS FOR CONFECTIONS

(51) International classification	:A23L 33/125, A23L 33/21, A23L 33/26
(31) Priority Document No	:63/452341
(32) Priority Date	:15/03/2023
(33) Name of priority country	:U.S.A.
(86) International Application No	:PCT/US2024/020169
Filing Date	:15/03/2024
(87) International Publication No	:WO 2024/192354
(61) Patent of Addition to Application Number	:NA
Filing Date	:NA
(62) Divisional to Application Number	:NA
Filing Date	:NA

(71)**Name of Applicant :**
1)WM. WRIGLEY JR. COMPANY
Address of Applicant :1132 W. Blackhawk Street Chicago, Illinois 60642 U.S.A.
(72)**Name of Inventor :**
1)MENDENHALL, Heather

(57) Abstract :
Bulk sweetener compositions and reduced sugar confections are described. The bulk sweetener composition may include at least one of a glucose syrup, a soluble fiber, and maltodextrin; and at least one of a monosaccharide, a disaccharide, and a low calorie monosaccharide. The bulk sweetener composition may provide for at least 33% sugar reduction in a confectionery product.

No. of Pages : 42 No. of Claims : 29

(12) PATENT APPLICATION PUBLICATION
(21) Application No.202547097750 A
(19) INDIA
(22) Date of filing of Application :10/10/2025
(43) Publication Date : 14/11/2025

(54) Title of the invention : METHODS AND APPARATUSES FOR HANDLING UE TRAFFIC ASSISTANCE AND DEVICE INFORMATION IN DUAL CONNECTIVITY

(51) International classification	:H04W 72/04, H04W 72/21, H04W 88/02, H04W 88/08
(31) Priority Document No	:63/452338
(32) Priority Date	:15/03/2023
(33) Name of priority country	:U.S.A.
(86) International Application No	:PCT/EP2024/057057
Filing Date	:15/03/2024
(87) International Publication No	:WO 2024/189225
(61) Patent of Addition to Application Number	:NA
Filing Date	:NA
(62) Divisional to Application Number	:NA
Filing Date	:NA

(71)**Name of Applicant :**
1)TELEFONAKTIEBOLAGET LM ERICSSON (PUBL)
Address of Applicant :SE-164 83 Stockholm Sweden
(72)**Name of Inventor :**
1)SHI, Nianshan
2)LYAZIDI, Mohammed Yazid
3)DE LAVAL, Fabian
4)TANO, Richard

(57) Abstract :
A method performed by a user equipment (UE) in a dual connectivity (DC) mode with a master node (MN) and a secondary node (SN) is provided. The method includes determining traffic assistance and device information (TADI) for the UE. The method includes sending the TADI towards one or more of the MN and SN.

No. of Pages : 26 No. of Claims : 36

(12) PATENT APPLICATION PUBLICATION
(21) Application No.202547097755 A
(19) INDIA
(22) Date of filing of Application :10/10/2025
(43) Publication Date : 14/11/2025

(54) Title of the invention : TRANSMISSION BY THE UE OF THE REQUIREMENTS UPON WHICH ML FEATURES COMBINATIONS ARE SUPPORTED BY THE UE

(51) International classification :H04W 24/02
(31) Priority Document No :2303937.3
(32) Priority Date :17/03/2023
(33) Name of priority country :U.K.
(86) International Application No :PCT/EP2024/054590
Filing Date :23/02/2024
(87) International Publication No :WO 2024/193940
(61) Patent of Addition to Application Number :NA
Filing Date :NA
(62) Divisional to Application Number :NA
Filing Date :NA

(71)**Name of Applicant :**
1)NOKIA TECHNOLOGIES OY
Address of Applicant :Karakaari 7 02610 Espoo Finland
(72)**Name of Inventor :**
1)LADDU, Keeth Saliya Jayasinghe
2)ALI, Amaanat
3)ENESCU, Mihai

(57) Abstract :
There is provided an apparatus at a user equipment comprising means for providing to a network node an indication of a set of conditions for supporting a machine learning enabled feature and means for providing an indication to the network node of whether at least one combination of the set of conditions requires a validation step.

No. of Pages : 33 No. of Claims : 21

(12) PATENT APPLICATION PUBLICATION
(21) Application No.202547097756 A
(19) INDIA
(22) Date of filing of Application :10/10/2025
(43) Publication Date : 14/11/2025

(54) Title of the invention : ENCAPSULATED COLORANT

(51) International classification :A23L 5/42
(31) Priority Document No :63/452420
(32) Priority Date :15/03/2023
(33) Name of priority country :U.S.A.
(86) International Application No :PCT/EP2024/056607
Filing Date :13/03/2024
(87) International Publication No :WO 2024/189055
(61) Patent of Addition to Application Number :NA
Filing Date :NA
(62) Divisional to Application Number :NA
Filing Date :NA

(71)**Name of Applicant :**
1)GIVAUDAN SA
Address of Applicant :Chemin de la Parfumerie 5 1214 Vernier Switzerland
(72)**Name of Inventor :**
1)MATTINGLY, Theresa
2)ROUNTREE, M. Kathleen
3)CHOUKET, Raja

(57) Abstract :
The present invention is related to a method of improving the color stability of an oil soluble colorant in a consumable comprising adding to a consumable base an effective amount of an oil soluble colorant encapsulated with at least one of: a whey containing protein, a milk polysaccharide such as lactose and glycoprotein and/or a plant protein.

No. of Pages : 38 No. of Claims : 24

(12) PATENT APPLICATION PUBLICATION
(21) Application No.202547097758 A
(19) INDIA
(22) Date of filing of Application :10/10/2025
(43) Publication Date : 14/11/2025

(54) Title of the invention : LAMINATING APPARATUS

(51) International classification	:B29C 51/16, B29C 51/10, B29C 51/12, B29C 63/02
(31) Priority Document No	:2023-138062
(32) Priority Date	:28/08/2023
(33) Name of priority country	:Japan
(86) International Application No	:PCT/JP2024/026225
Filing Date	:23/07/2024
(87) International Publication No	:WO 2025/047201
(61) Patent of Addition to Application Number	:NA
Filing Date	:NA
(62) Divisional to Application Number	:NA
Filing Date	:NA

(71)**Name of Applicant :**
1)ASANO LABORATORIES CO., LTD.
Address of Applicant :5, Toigoshi, Kurozasa-cho, Miyoshi-shi, Aichi 4700201 Japan
(72)**Name of Inventor :**
1)ISHIDA Tatsuya
2)HAYASHI Kazushi
3)OGUMA Yasushi
4)ONISHI Kazushige

(57) Abstract :
A laminating apparatus (100) comprises: a heating means (110) for heating a resin film (S); a holding means (130) for holding the resin film (S); and a vacuum suction means (140) for coating and forming the resin film (S) on the surface of a base material (B). The laminating apparatus (100) further comprises a shutter device (120) that is disposed between the heating means (110) and the resin film (S) held by the holding means (130) and that opens and closes by being divided at a central portion so as to act as a heat blocking means. The shutter device (120) is controlled so as to be in an open state when the resin film (S) held by the holding means (130) is heated by the heating means (110), and is controlled so as to be in a closed state when the resin film (S) is adhered to the surface of the base material (B) by a vacuum suction means or a compressed air means and the resin film (S) is fused to the surface of the base material (B).

No. of Pages : 14 No. of Claims : 4

(12) PATENT APPLICATION PUBLICATION
(21) Application No.202547097763 A
(19) INDIA
(22) Date of filing of Application :10/10/2025
(43) Publication Date : 14/11/2025

(54) Title of the invention : YEAST OLEOSOME COMPOSITION

(51) International classification :A23L 33/14
(31) Priority Document No :23162197.0
(32) Priority Date :15/03/2023
(33) Name of priority country :EPO
(86) International Application No :PCT/EP2024/056975
Filing Date :15/03/2024
(87) International Publication No :WO 2024/189199
(61) Patent of Addition to Application Number :NA
Filing Date :NA
(62) Divisional to Application Number :NA
Filing Date :NA

(71)**Name of Applicant :**
1)CULTIVATED BIOSCIENCES SA
Address of Applicant :Route de la Petite Glâne 20 1566 Saint-Aubin Switzerland
(72)**Name of Inventor :**
1)ZOGG, Dimitri
2)SPADONI ANDREANI, Eugenio
3)AGORASTOS, Georgios
4)TURNER, Tomas

(57) Abstract :
The present invention relates to a yeast oleosome composition comprising yeast oleosomes and at least one isolated yeast cell wall component and preferably having specific particle size, density and zeta potential. The composition is characterized by good physical stability and sensory properties. The invention also relates to a process for producing a yeast oleosome composition of the invention, to products comprising the yeast oleosome composition of the invention and to the use of the composition for improving the sensory properties of a food composition or beverage or of an edible ingredient. Furthermore, the composition of the present invention has proven useful in reducing the intensity of astringency in food products and beverages.

No. of Pages : 40 No. of Claims : 19

(12) PATENT APPLICATION PUBLICATION
(21) Application No.202547097769 A
(19) INDIA
(22) Date of filing of Application :10/10/2025
(43) Publication Date : 14/11/2025

(54) Title of the invention : HIV VACCINE

(51) International classification	:A61K 39/12, A61K 39/00, C07K 14/155
(31) Priority Document No	:63/459449
(32) Priority Date	:14/04/2023
(33) Name of priority country	:U.S.A.
(86) International Application No	:PCT/US2024/024503
Filing Date	:12/04/2024
(87) International Publication No	:WO 2024/216217
(61) Patent of Addition to Application Number	:NA
Filing Date	:NA
(62) Divisional to Application Number	:NA
Filing Date	:NA

(71)**Name of Applicant :**
1)BIONTECH SE
Address of Applicant :An der Goldgrube 12 55131 Mainz Germany
2)THE GENERAL HOSPITAL CORPORATION
(72)**Name of Inventor :**
1)LE DOUCE, Valentin
2)ESAULOVA, Ekaterina
3)KAXIRAS, Daphne
4)ROONEY, Michael Steven
5)ADDONA, Theresa
6)SAHIN, Ugur
7)GAIHA, Gaurav

(57) Abstract :
The present invention concerns compositions comprising an RNA molecule, wherein the RNA molecule comprises an expression cassette encoding an immunogenic peptide, which peptide comprises at least two fragments, wherein each fragment comprises at least one epitope, wherein the epitope is derived from an amino acid sequence encoded by the human immunodeficiency virus (HIV) and medical preparations comprising such compositions. Furthermore, the invention concerns methods for preventing or treating HIV.

No. of Pages : 118 No. of Claims : 149

(12) PATENT APPLICATION PUBLICATION
(21) Application No.202547097773 A
(19) INDIA
(22) Date of filing of Application :10/10/2025
(43) Publication Date : 14/11/2025

(54) Title of the invention : A PHARMACEUTICAL COMPOSITION FOR SUBCUTANEOUS INJECTION OF ANAGRELIDE

(51) International classification	:A61K 9/00, A61K 47/14
(31) Priority Document No	:20235300
(32) Priority Date	:15/03/2023
(33) Name of priority country	:Finland
(86) International Application No	:PCT/FI2024/050119
Filing Date	:15/03/2024
(87) International Publication No	:WO 2024/189275
(61) Patent of Addition to Application Number	:NA
Filing Date	:NA
(62) Divisional to Application Number	:NA
Filing Date	:NA

(71)**Name of Applicant :**
1)SARTAR THERAPEUTICS OY
Address of Applicant :c/o Terkko Health Hub Haartmaninkatu 4/14 00290 Helsinki Finland
(72)**Name of Inventor :**
1)VAN DEN HEUVEL, Dennie
2)IVANITSKIY, Katja
3)MAKSIMOW, Mikael

(57) Abstract :
The present invention is directed to a pharmaceutical composition for subcutaneous injection comprising anagrelide, 3-hydroxy anagrelide or a pharmaceutically acceptable salt thereof including the hydrochloride salt thereof in a solvent comprising a medium-chain triglyceride (MCT) oil and optionally ethanol. The present invention is also directed to methods for preparing these pharmaceutical compositions and dosage forms, and methods of treating subjects having cancer or a myoeloproliferative disorder utilizing the pharmaceutical compositions and dosage forms provided herein.

No. of Pages : 13 No. of Claims : 20

(12) PATENT APPLICATION PUBLICATION
(21) Application No.202547097787 A
(19) INDIA
(22) Date of filing of Application :10/10/2025
(43) Publication Date : 14/11/2025

(54) Title of the invention : HIGH BITRATE AUDIO WIRELESS COMMUNICATION

(51) International classification	:H04R 5/033, G06F 3/16, H04M 1/60, H04R 5/04, H04W 88/04
(31) Priority Document No	:63/460542
(32) Priority Date	:19/04/2023
(33) Name of priority country	:U.S.A.
(86) International Application No	:PCT/US2024/024610
Filing Date	:15/04/2024
(87) International Publication No	:WO 2024/220356
(61) Patent of Addition to Application Number	:NA
Filing Date	:NA
(62) Divisional to Application Number	:NA
Filing Date	:NA

(71)**Name of Applicant :**
1)GOOGLE LLC
Address of Applicant :1600 Amphitheatre Parkway Mountain View, California 94043 U.S.A.
(72)**Name of Inventor :**
1)KUMAR, Sunil

(57) Abstract :
Various arrangements are presented that can help preserve bandwidth, such as for audio communications involving high fidelity audio being transmitted to wireless earbuds. A first earbud can receive an audio packet from an audio source device that includes stereo audio separately encoded as a first monophonic channel and a second monophonic channel. The first earbud can determine that it successfully received the audio packet. The second earbud may not successfully receive the audio packet. Thus, the second earbud can make a request to the first earbud. The first earbud can then directly transmit to the second earbud, audio data for only the second monophonic channel from the audio packet. Each earbud can then output its respective monophonic audio channel.

No. of Pages : 22 No. of Claims : 20

(12) PATENT APPLICATION PUBLICATION
(19) INDIA
(22) Date of filing of Application :10/10/2025
(21) Application No.202547097804 A
(43) Publication Date : 14/11/2025

(54) Title of the invention : MULTI-BAND ANTENNA SUPPORT

(51) International classification	:H01Q 1/22, H01Q 1/24, H01Q 5/42, H01Q 9/04, H01Q 9/42
(31) Priority Document No	:18/321879
(32) Priority Date	:23/05/2023
(33) Name of priority country	:U.S.A.
(86) International Application No	:PCT/US2024/024176
Filing Date	:12/04/2024
(87) International Publication No	:WO 2024/242786
(61) Patent of Addition to Application Number	:NA
Filing Date	:NA
(62) Divisional to Application Number	:NA
Filing Date	:NA

(71)**Name of Applicant :**
1)QUALCOMM INCORPORATED
Address of Applicant :ATTN: International IP Administration 5775 Morehouse Drive San Diego, California 92121-1714 U.S.A.
(72)**Name of Inventor :**
1)FABREGA SANCHEZ, Jorge
2)MISHRA, Chinmaya
3)JESSIE, Darryl Sheldon
4)ASURI, Bhushan Shanti
5)TRAN, Allen Minh-Triet
6)TASSOUDJI, Mohammad Ali
7)KIM, Jeongil Jay
8)SAHOTA, Gurkanwal Singh
9)WANG, Kevin Hsi-Huai

(57) Abstract :
A method of transducing signals includes: transducing first signals, of frequencies above at least 24 GHz, between first wireless signals and first guided signals, using a plurality of first antenna elements comprising at least one first substrate and at least one ground conductor; and transducing second signals, of frequencies within at least a portion of a frequency range between 8 GHz and 24 GHz, between second wireless signals and second guided signals, using at least one second antenna element each comprising a transducer disposed on a second substrate that at least partially overlaps an active component set and the at least one first substrate, or disposed on at least one of the at least one first substrate, the active component set being configured to provide signals for wireless transmission, or configured to process wirelessly-received signals, or a combination thereof.

No. of Pages : 30 No. of Claims : 27

(12) PATENT APPLICATION PUBLICATION
(21) Application No.202547097835 A
(19) INDIA
(22) Date of filing of Application :10/10/2025
(43) Publication Date : 14/11/2025

(54) Title of the invention : METHOD FOR PRODUCING A SHIELDED LINE

(51) International classification	:H01R 9/05, H01R 43/048, H01R 43/28
(31) Priority Document No	:10 2023 106 759.1
(32) Priority Date	:17/03/2023
(33) Name of priority country	:Germany
(86) International Application No	:PCT/EP2024/056785
Filing Date	:14/03/2024
(87) International Publication No	:WO 2024/194136
(61) Patent of Addition to Application Number	:NA
Filing Date	:NA
(62) Divisional to Application Number	:NA
Filing Date	:NA

(71)**Name of Applicant :**
1)SCHLEUNIGER AG
Address of Applicant :Bierigutstrasse 9 3608 Thun Switzerland
(72)**Name of Inventor :**
1)BRUCKMOSER, Robert
2)NOWAK, Kevin
3)ELSNER, Thierry
4)SANDHOFER, Reto
5)PETERMANN, Manfred

(57) Abstract :
The invention relates to a method for producing a shielded line (100), comprising the following steps: providing a conductor (110) with a shield braid (120) which is arranged around an outer circumferential surface of the conductor (110) and has a plurality of shield strands (121), opening the shield braid (120) such that the shield strands (121) of the shield braid (120) are no longer braided in the region of a free end of the shield strands (121), positioning the free end of the shield strands (121) of the opened shield braid (120) such that the free end extends away from the conductor (110) in a substantially radial direction, separating out the positioned free end of the shield braid (120) by means of a splitting device (230) such that in the shield braid (120) a gap (122) is produced which subdivides the plurality of shield strands (121) or spaces them apart from one another in groups, placing a crimping sleeve (130) around the outer circumferential surface of the conductor and around the shield braid (120) such that a joining portion comes to lie between two free radial ends (131) of the crimping sleeve (130) in the region of the gap (122) of the shield braid (120), and crimping on the placed crimping sleeve (130) by means of a crimping tool (240).

No. of Pages : 17 No. of Claims : 11

(12) PATENT APPLICATION PUBLICATION
(21) Application No.202547097877 A
(19) INDIA
(22) Date of filing of Application :10/10/2025
(43) Publication Date : 14/11/2025

(54) Title of the invention : LOW-FILLER OR FILLER-FREE CONSTRUCTION MATERIAL FORMULATIONS

(51) International classification	:C04B 20/02, C04B 28/04, C04B 28/06, C04B 40/00
(31) Priority Document No	:NA
(32) Priority Date	:NA
(33) Name of priority country	:NA
(86) International Application No	:PCT/EP2023/059827
Filing Date	:14/04/2023
(87) International Publication No	:WO 2024/213265
(61) Patent of Addition to Application Number	:NA
Filing Date	:NA
(62) Divisional to Application Number	:NA
Filing Date	:NA

(71)**Name of Applicant :**
1)WACKER CHEMIE AG
Address of Applicant :Gisela-Stein-Str. 1 81671 München Germany
(72)**Name of Inventor :**
1)BONIN, Klaus
2)MERKEL, Christina

(57) Abstract :
The invention relates to dry construction material formulations containing one or more hydraulically setting binders, one or more polymerisates of ethylenically unsaturated monomers in the form of powders which can be redispersed in water (polymer powders), and optionally one or more additives. The invention is characterized in that = 9 wt.%, based on the total weight of the dry construction material formulations, of fillers and one or more water-insoluble cellulose fiber gels are contained in the form of dispersible powders.

No. of Pages : 21 No. of Claims : 15

(12) PATENT APPLICATION PUBLICATION
(21) Application No.202547097878 A
(19) INDIA
(22) Date of filing of Application :10/10/2025
(43) Publication Date : 14/11/2025

(54) Title of the invention : METHOD FOR FEEDING A SYNTHETIC THREAD

(51) International classification	:D01D 7/00, D01D 13/02
(31) Priority Document No	:10 2023 001 031.6
(32) Priority Date	:16/03/2023
(33) Name of priority country	:Germany
(86) International Application No	:PCT/EP2024/056195
Filing Date	:08/03/2024
(87) International Publication No	:WO 2024/188862
(61) Patent of Addition to Application Number	:NA
Filing Date	:NA
(62) Divisional to Application Number	:NA
Filing Date	:NA

(71)**Name of Applicant :**
1)OERLIKON TEXTILE GMBH & CO. KG
Address of Applicant :Leverkuser Strasse 65 42897 Remscheid Germany
(72)**Name of Inventor :**
1)HERRNDORF, Marc-Andrè
2)STAMMEN, Markus
3)WAWRA, Thorsten

(57) Abstract :
The invention relates to a method for feeding a synthetic thread (F1-Fn) from a melt spinning winding device (1), which comprises a melt spinning device (10) which is designed for extruding the synthetic thread (F1-Fn) and a winding device (20), which is designed for winding the synthetic thread (F1-Fn), wherein the thread (F1-Fn) can be fed from the melt spinning device to the winding device (40) by means of a chute (30). The feed can be adjusted by means of a predetermined pressure range (I, II, III) in a suction unit (50) on the winding device (40). The invention also relates to the associated winding device.

No. of Pages : 20 No. of Claims : 15

(12) PATENT APPLICATION PUBLICATION
(21) Application No.202547097902 A
(19) INDIA
(22) Date of filing of Application :10/10/2025
(43) Publication Date : 14/11/2025

(54) Title of the invention : ADAPTER FOR WINDSCREEN-WIPER BLADE AND WIPING DEVICE

(51) International classification :B60S 1/40
(31) Priority Document No :FR2304356
(32) Priority Date :28/04/2023
(33) Name of priority country :France
(86) International Application No :PCT/EP2024/061355
Filing Date :25/04/2024
(87) International Publication No :WO 2024/223727
(61) Patent of Addition to Application Number :NA
Filing Date :NA
(62) Divisional to Application Number :NA
Filing Date :NA

(71)**Name of Applicant :**
1)VALEO SYSTÈMES D'ESSUYAGE
Address of Applicant :8 Rue Louis Lormand, 78321 LE MESNIL SAINT DENIS CEDEX France
(72)**Name of Inventor :**
1)GAUCHER, Vincent
2)JEANPIERRE, Jerome

(57) Abstract :
The invention relates to an adapter (1) that is configured to be able to join together a windscreen-wiper blade (300) and a windscreen-wiper arm (200), the adapter (1) comprising a locking device (11) having a flexible tab (12) supporting a locking lug (14) configured to be inserted into a corresponding opening (203) in the windscreen-wiper arm (200) in order to lock the longitudinal movement of the arm (200). The flexible tab (12) extends in a transverse direction (X), one end of the flexible tab (12) being connected to the side wall (3) and the other end supporting an unlocking button (13) accessible from one side of the adapter (1) opposite to the side wall (3), the flexible tab (12) being pivotable about a longitudinal pivot axis in order to disengage the locking lug (14) from the windscreen-wiper arm (200).

No. of Pages : 12 No. of Claims : 13

(12) PATENT APPLICATION PUBLICATION
(21) Application No.202547097907 A
(19) INDIA
(22) Date of filing of Application :10/10/2025
(43) Publication Date : 14/11/2025

(54) Title of the invention : IDENTIFYING AND/OR ANALYZING OPERATING STATES OF AN INDUSTRIAL PROCESS

(51) International classification :G05B 23/02
(31) Priority Document No :23161362.1
(32) Priority Date :13/03/2023
(33) Name of priority country :EPO
(86) International Application No :PCT/EP2024/053116
Filing Date :08/02/2024
(87) International Publication No :WO 2024/188546
(61) Patent of Addition to Application Number :NA
Filing Date :NA
(62) Divisional to Application Number :NA
Filing Date :NA

(71)**Name of Applicant :**
1)ABB SCHWEIZ AG
Address of Applicant :Bruggerstrasse 66 5400 Baden Switzerland
(72)**Name of Inventor :**
1)TAN, Ruomu
2)KOTRIWALA, Arzam Muzaffar
3)SONG, Chen
4)HOLLENDER, Martin
5)FECHNER, Tobias

(57) Abstract :
A computer-implemented method (100) for identifying and/or analyzing operating states (2) of an industrial process (1) that is being executed on an industrial plant, comprising the steps of: · obtaining (110) at least one time series (3a) of measurement values of at least one process variable (3) of the industrial process (1); · determining (120), from the at least one time series (3a), using a given classifying logic (4), for at least one point in time in the time series (3a), at least one operating state (2) of the industrial process (1); and · from one or more of: o at least one statistical quantity (2a) computed over multiple operating states (2); o at least one sequence (2b) of operating states (2); o the duration (2c) for which at least one operating state (2) lasts; and o a combination of at least one operating state (2) and measurement values from the time series (3a) that relate to this operating state (2), determining (130) one or more of: o at least one quantity of interest (5) that further characterizes the operating state (2) of the industrial process (1); o a fitness (6a) of at least one given model (6) for explaining the time series (3a) of measurement values; and o a fitness (3b) of at least one measurement value of the time series (3a) as a training example for the training of at least one machine learning model (1), and/or o training (140) a model (6) that describes the behavior of the industrial process (1) in the operating state (2) determined by the classifying logic (4).

No. of Pages : 19 No. of Claims : 15

(12) PATENT APPLICATION PUBLICATION
(21) Application No.202547097913 A
(19) INDIA
(22) Date of filing of Application :10/10/2025
(43) Publication Date : 14/11/2025

(54) Title of the invention : HEALTH METRICS ASSOCIATED WITH CLOUD SERVICES

(51) International classification	:G06F 9/50, G06F 11/30, G06F 11/32, H04L 43/045
(31) Priority Document No	:63/462875
(32) Priority Date	:28/04/2023
(33) Name of priority country	:U.S.A.
(86) International Application No	:PCT/US2024/026769
Filing Date	:29/04/2024
(87) International Publication No	:WO 2024/227136
(61) Patent of Addition to Application Number	:NA
Filing Date	:NA
(62) Divisional to Application Number	:NA
Filing Date	:NA

(71)**Name of Applicant :**
1)ORACLE INTERNATIONAL CORPORATION
Address of Applicant :500 Oracle Parkway, M/S 50P7 Redwood Shores, California 94065 U.S.A.
(72)**Name of Inventor :**
1)BERG, Daniel
2)PETERSON, Eric
3)FOX, Kenneth Richard
4)MORAN, William Nickolas
5)LEUNG, Wai Ho

(57) Abstract :
Techniques for monitoring the health of services of a system are disclosed. A system determines that a detected alarm is associated with a service feature, and the service feature is associated with a service of a cloud environment. The system computes a health metric for the service based at least on the detected alarm that is associated with the service feature. Additionally, the system generates a visual representation that includes the health metric for display on a service health interface.

No. of Pages : 84 No. of Claims : 13

(12) PATENT APPLICATION PUBLICATION

(21) Application No.202547097941 A

(19) INDIA

(22) Date of filing of Application :10/10/2025

(43) Publication Date : 14/11/2025

(54) Title of the invention : PROVIDING CUSTOMERS VISIBILITY INTO SECURITY AND COMPLIANCE OF SERVICES IN A CUSTOMER CLOUD INFRASTRUCTURE ENVIRONMENT

(51) International classification	:G06F 9/50, G06F 21/50, H04L 41/22, G06F 21/62, G06F 21/57
(31) Priority Document No	:63/462880
(32) Priority Date	:28/04/2023
(33) Name of priority country	:U.S.A.
(86) International Application No	:PCT/US2024/026866
Filing Date	:29/04/2024
(87) International Publication No	:WO 2024/227182
(61) Patent of Addition to Application Number	:NA
Filing Date	:NA
(62) Divisional to Application Number	:NA
Filing Date	:NA

(71)**Name of Applicant :**

1)ORACLE INTERNATIONAL CORPORATION

Address of Applicant :500 Oracle Parkway, M/S 50P7 Redwood Shores, California 94065 U.S.A.

(72)**Name of Inventor :**

1)GILBURD, Zachary

2)POTLAPALLY, Nachiketh Rao

3)LUO, Qingyang

4)YURICA, Kevin

5)MILLER, Karl

6)QUAL, Benjamin Di

(57) Abstract :

Techniques for presenting information indicating infrastructure security and compliance of services of a customer cloud environment to a customer-facing dashboard are disclosed. The information presented to the customer-facing dashboard is a subset of information available to operators associated with a cloud service provider (CSP). A tier-one dashboard service obtains information indicating infrastructure security and compliance of services in the customer cloud infrastructure environment. The tier-one dashboard service presents the information indicating infrastructure security and compliance to CSP operators on a CSP-facing dashboard. The CSP-facing dashboard is not accessible by customer operators. A tier-two dashboard service obtains the infrastructure security and compliance information from the tier-one dashboard service and filters the infrastructure security information to create a subset of information indicating the security and compliance of the services. The subset of infrastructure security and compliance information is presented to operators associated with a customer of the CSP on a customer-facing dashboard.

No. of Pages : 50 No. of Claims : 15

(12) PATENT APPLICATION PUBLICATION
(21) Application No.202547098002 A
(19) INDIA
(22) Date of filing of Application :10/10/2025
(43) Publication Date : 14/11/2025

(54) Title of the invention : EMERGENCY RELEASE FOR TELEVISION WALL MOUNT

(51) International classification	:H04N 5/655, F16M 13/02, F16M 11/04, F16M 11/08
(31) Priority Document No	:PCT/US2024/019975
(32) Priority Date	:14/03/2024
(33) Name of priority country	:U.S.A.
(86) International Application No	:PCT/US2024/045921
Filing Date	:10/09/2024
(87) International Publication No	:WO 2025/193259
(61) Patent of Addition to Application Number	:NA
Filing Date	:NA
(62) Divisional to Application Number	:NA
Filing Date	:NA

(71)**Name of Applicant :**
1)LEGRAND AV INC.
Address of Applicant :10900 Red Circle Drive Minnetonka, MN 55343 U.S.A.
(72)**Name of Inventor :**
1)SCHUH, Mathew
2)HARO GONZALEZ, Dorian Farid
3)MAVES, Adam

(57) Abstract :
Systems and methods are provided enabling installation of an in-wall enclosure and television mount that alleviates the drawbacks of the prior art mounts. The inventions encompass a flexible and modular approach to mounting larger televisions on a stud wall. The television mount includes a display mount with an extension mechanism that can be shifted between a retracted position in which an outer assembly is positioned adjacent an opening in the enclosure and an extended position in which the outer assembly is spaced apart from the enclosure. A latch mechanism latches the display mount in the retracted position. A first release mechanism and an emergency release are provided to enable release of the latch mechanism from outside the enclosure.

No. of Pages : 20 No. of Claims : 19

(12) PATENT APPLICATION PUBLICATION
(21) Application No.202547098004 A
(19) INDIA
(22) Date of filing of Application :10/10/2025
(43) Publication Date : 14/11/2025

(54) Title of the invention : HIGHLY STABLE WHIPPABLE COMPOSITIONS COMPRISING ß-CASEIN

(51) International classification	:A23C 11/04, A23C 11/06, A23D 7/005, A23J 1/20, A23J 3/10
(31) Priority Document No	:63/490439
(32) Priority Date	:15/03/2023
(33) Name of priority country	:U.S.A.
(86) International Application No	:PCT/US2024/020064
Filing Date	:15/03/2024
(87) International Publication No	:WO 2024/192319
(61) Patent of Addition to Application Number	:NA
Filing Date	:NA
(62) Divisional to Application Number	:NA
Filing Date	:NA

(71)**Name of Applicant :**
1)RICH PRODUCTS CORPORATION
Address of Applicant :One Robert Rich Way Buffalo, NY 14213 U.S.A.
(72)**Name of Inventor :**
1)NAIR, Pulari Krishnankutty
2)BISSONNETTE, Simon
3)REISER, Ralf

(57) Abstract :
Disclosed herein are food formulations comprising ß-casein as the primary casein protein. Also disclosed herein are compositions comprising casein protein enriched in ß-casein. Further disclosed herein are whippable or non-whippable emulsion structures comprising ß- casein in amounts higher than those typically found in milk and methods of making the compositions.

No. of Pages : 36 No. of Claims : 60

(12) PATENT APPLICATION PUBLICATION
(21) Application No.202547098011 A
(19) INDIA
(22) Date of filing of Application :10/10/2025
(43) Publication Date : 14/11/2025

(54) Title of the invention : FOAMED ARTICLE WITH IMPROVED SURFACE AESTHETICS

(51) International classification	:B29C 44/42, B29C 45/77
(31) Priority Document No	:23167444.1
(32) Priority Date	:11/04/2023
(33) Name of priority country	:EPO
(86) International Application No	:PCT/EP2024/059213
Filing Date	:04/04/2024
(87) International Publication No	:WO 2024/213467
(61) Patent of Addition to Application Number	:NA
Filing Date	:NA
(62) Divisional to Application Number	:NA
Filing Date	:NA

(71)**Name of Applicant :**
1)SABIC GLOBAL TECHNOLOGIES B.V.
Address of Applicant :Plasticslaan 1 4612 PX Bergen op Zoom Netherlands
(72)**Name of Inventor :**
1)CHU, Kar-Man Raymond
2)YANEV, Angel Stoyanov
3)WINTERS, Gertrudis
4)BANDE MARTINEZ, Daniel

(57) Abstract :
A process for forming a foamed article including injecting a molten mixture including a foaming agent and a polymer composition into a mold; and solidifying the molten mixture in the mold to form the foamed article, wherein the injecting includes controlling a flow length to thickness ratio of the molten mixture to be less than 160, or less than 120, and controlling an in-mold linear speed of the molten mixture to be 40 to 140 centimeters per second or 50 to 120 centimeters per second.

No. of Pages : 18 No. of Claims : 15

(12) PATENT APPLICATION PUBLICATION
(21) Application No.202547098275 A
(19) INDIA
(22) Date of filing of Application :10/10/2025
(43) Publication Date : 14/11/2025

(54) Title of the invention : MODULE AND METHOD FOR SUPERVISING A VOLTAGE CONVERTER

(51) International classification :H02P 29/024
(31) Priority Document No :FR2303847
(32) Priority Date :17/04/2023
(33) Name of priority country :France
(86) International Application No :PCT/EP2024/060314
Filing Date :16/04/2024
(87) International Publication No :WO 2024/218097
(61) Patent of Addition to Application Number :NA
Filing Date :NA
(62) Divisional to Application Number :NA
Filing Date :NA

(71)**Name of Applicant :**
1)VALEO EAUTOMOTIVE GERMANY GMBH
Address of Applicant :Frauenauracher Str. 85 91056 Erlangen Germany
(72)**Name of Inventor :**
1)PIERRE, Thomas

(57) Abstract :
The invention relates to a supervision module (1) for supervising a voltage converter (2), the voltage converter (2) being intended to connect a rotating electric machine (3) to a DC voltage source (4), in particular to a first on-board electrical system, in particular a 48-V on-board electrical system, the supervision module (1) comprising: a measuring module for measuring the voltage of the DC voltage source (4), • a comparison module for comparing the voltage measured by the measuring module with a safety threshold, the comparison module being configured to send an overvoltage signal if the measured voltage is higher than the safety voltage, • a control unit configured to receive the overvoltage signal and to generate a self-start signal in the event of an overvoltage detected by the comparison module, • a microcontroller configured to restart the voltage converter (2) and supervise the voltage across the terminals of the capacitors (27) so as to avoid an overvoltage across the terminals of the capacitors (27).

No. of Pages : 12 No. of Claims : 12

(12) PATENT APPLICATION PUBLICATION
(21) Application No.202547098384 A
(19) INDIA
(22) Date of filing of Application :13/10/2025
(43) Publication Date : 14/11/2025

(54) Title of the invention : HEAD-UP DISPLAY

(51) International classification	:G02B 27/01, B60K 35/23
(31) Priority Document No	:2023-049499
(32) Priority Date	:27/03/2023
(33) Name of priority country	:Japan
(86) International Application No	:PCT/JP2024/010707
Filing Date	:19/03/2024
(87) International Publication No	:WO 2024/203600
(61) Patent of Addition to Application Number	:NA
Filing Date	:NA
(62) Divisional to Application Number	:NA
Filing Date	:NA

(71)**Name of Applicant :**
1)TORAY INDUSTRIES, INC.
Address of Applicant :1-1, Nihonbashi-Muromachi 2-chome, Chuo-ku, Tokyo 1038666 Japan
(72)**Name of Inventor :**
1)MATSUI Hisato
2)MATSUO Yuji
3)UTO Takayuki

(57) Abstract :
An HUD (1) according to the present invention includes: a light source (2) that projects an image; a projection image display member (3) on which the image is projected; and a polarization control layer (4). The polarization control layer (4) is disposed between the light source (2) and the projection image display member (3) and has a function of changing the polarization state of light emitted from the light source (2). A polarization component that becomes S-polarized light with respect to an incident surface of the projection image display member (3) and a polarization component that becomes P-polarized light with respect to the incident surface satisfy [expression 1] and [expression 2], and in the projection image display member (3), the average reflectance at wavelengths of 400-700 nm when linearly polarized light of P-polarized light is incident at an incident angle of 60° thereon is 5-100%, and the transmittance of visible light when natural light is incident at an incident angle of 0° thereon is 50-100%. [Expression 1]: Sratio2 Sratio1 [Expression 2]: Pratio2 = 0.51 Herein, Sratio1 is the ratio of the S-polarization component in the light emitted from the light source (2), Sratio2 is the ratio of the S-polarization component in the light incident on the projection image display member (3), and Pratio2 is the ratio of the P-polarization component in the light incident on the projection image display member (3).

No. of Pages : 127 No. of Claims : 22

(12) PATENT APPLICATION PUBLICATION
(21) Application No.202547098386 A
(19) INDIA
(22) Date of filing of Application :13/10/2025
(43) Publication Date : 14/11/2025

(54) Title of the invention : LONG-FIBER NONWOVEN FABRIC, METHOD FOR MANUFACTURING SAME, AND SANITARY MATERIAL

(51) International classification	:D04H 3/14, A61F 13/15, A61F 13/51, A61L 15/24, D04H 3/16
(31) Priority Document No	:2023-053076
(32) Priority Date	:29/03/2023
(33) Name of priority country	:Japan
(86) International Application No	:PCT/JP2024/010048
Filing Date	:14/03/2024
(87) International Publication No	:WO 2024/203398
(61) Patent of Addition to Application Number	:NA
Filing Date	:NA
(62) Divisional to Application Number	:NA
Filing Date	:NA

(71)**Name of Applicant :**
1)TORAY INDUSTRIES, INC.
Address of Applicant :1-1, Nihonbashi-Muromachi 2-chome, Chuo-ku, Tokyo 1038666 Japan
(72)**Name of Inventor :**
1)KAJIWARA Kentaro
2)MORIOKA Hideki

(57) Abstract :
In order to provide a long-fiber nonwoven fabric having a smooth surface without pleats and having good stretchability, at least one surface of a long-fiber nonwoven fabric according to the present invention is composed of fibers FA having a thermoplastic resin A as a main component, the ratio Dmax/Dmin of the apparent maximum fiber diameter Dmax (μm) and the apparent minimum fiber diameter Dmin (μm) of the fiber FA is 1.2-5.0, the elongation recovery rate of the long-fiber nonwoven fabric is 50%-99%, and the apparent density is 0.02 g/cm3-0.20 g/cm3. The long-fiber nonwoven fabric is preferably used for a sanitary material.

No. of Pages : 74 No. of Claims : 14

(12) PATENT APPLICATION PUBLICATION
(21) Application No.202547098431 A
(19) INDIA
(22) Date of filing of Application :13/10/2025
(43) Publication Date : 14/11/2025

(54) Title of the invention : DEVICE FOR WINDING UP SHEET-LIKE MEMBER

(51) International classification	:B60J 3/00, B60R 5/04, E06B 9/42, E06B 9/80
(31) Priority Document No	:2023-066490
(32) Priority Date	:14/04/2023
(33) Name of priority country	:Japan
(86) International Application No	:PCT/JP2024/014831
Filing Date	:12/04/2024
(87) International Publication No	:WO 2024/214815
(61) Patent of Addition to Application Number	:NA
Filing Date	:NA
(62) Divisional to Application Number	:NA
Filing Date	:NA

(71)**Name of Applicant :**
1)ASHIMORI INDUSTRY CO., LTD.
Address of Applicant :11-61, Senrioka 7-chome, Settsu-shi, Osaka 5660001 Japan
(72)**Name of Inventor :**
1)YASUDA Soshi
2)YOSHIDA Yushi

(57) Abstract :
A device (20) for winding up a sheet-like member is provided with: a winding shaft; a housing (50) that includes a locking side wall (71) having a through-hole (71h), and rotatably supports the winding shaft; and a lock member (80) that is movable between a lock position and a lock release position. The end part of the winding shaft includes a rotation restriction part (47), the lock member includes lock parts (84A), (84B), and the locking side wall includes holding parts (72A), (72B) disposed at intervals. In a state in which the lock member is positioned at the lock position, the lock parts are disposed between the rotation restriction part and the holding parts. Along with this, by the rotational urging force of the winding shaft, the rotation restriction part pushes the lock parts in a direction away from each other, while the holding parts restrict the movement of the lock parts in the direction away from each other, thereby restricting the rotation of the rotation restriction part.

No. of Pages : 48 No. of Claims : 11

(12) PATENT APPLICATION PUBLICATION
(21) Application No.202547098432 A
(19) INDIA
(22) Date of filing of Application :13/10/2025
(43) Publication Date : 14/11/2025

(54) Title of the invention : CAUSTIC SOLUTION EVAPORATION PLANT

(51) International classification	:B01D 1/26, B01D 3/00, B01D 3/06, B01D 3/10, B01D 3/14
(31) Priority Document No	:202320823859.7
(32) Priority Date	:14/04/2023
(33) Name of priority country	:China
(86) International Application No	:PCT/EP2024/060178
Filing Date	:15/04/2024
(87) International Publication No	:WO 2024/213793
(61) Patent of Addition to Application Number	:NA
Filing Date	:NA
(62) Divisional to Application Number	:NA
Filing Date	:NA

(71)**Name of Applicant :**
1)BERTRAMS CHEMIEANLAGEN AG
Address of Applicant :Eptingerstraße 41 4132 Muttenz Switzerland
(72)**Name of Inventor :**
1)HOSTETTLER, Max

(57) Abstract :
The invention relates to a caustic solution evaporation plant comprising a caustic solution feeding line, a first stage evaporator (EV-1101) receiving low concentrated caustic solution and operating at a reduced pressure of less than or equal to 0.15 bar, a second stage evaporator (EV-1201) receiving enriched caustic solution from the first evaporator (EV-1101) and operating at a reduced pressure of less than or equal to 0.5 bar, a third stage evaporator (EV-1301) receiving further enriched caustic solution from the second stage evaporator (EV-1201) and operating at a pressure of greater than or equal to 1.1 bar, a fourth stage evaporator (EV-1401) receiving further enriched caustic solution from the third evaporator (EV-1301) and operating under a pressure greater than 4.0 bar characterized in that the first stage evaporator (EV-1101) being heated by the vapours generated from the second stage evaporator (EV-1201), the second stage evaporator (EV-1201) being heated by the vapours generated from the third stage evaporator (EV- 1301), the third stage evaporator (EV-1301) being heated by the vapours generated by the fourth stage evaporator (EV-1401), and the fourth stage evaporator (EV-1401) being heated by thermal oil, the thermal oil being circulated by a pump (P-6301) through an electric heater (H-6101) in a closed loop, a vapour condensate tank (T-7101) collecting vapour condensate from the first (EV-1101) second (EV-1201), and third stage evaporator (EV-1301), a water cooled surface condenser (C-7101) condensing vapour generated in the first stage evaporator (EV-1101), a pump (P7101) draining the vapour condensate tank (T-7101), and a product caustic solution exit line.

No. of Pages : 8 No. of Claims : 13

(12) PATENT APPLICATION PUBLICATION
(21) Application No.202547098474 A
(19) INDIA
(22) Date of filing of Application :13/10/2025
(43) Publication Date : 14/11/2025

(54) Title of the invention : VEHICLE SEAT AND METHOD FOR MANUFACTURING VEHICLE SEAT

(51) International classification	:B60N 2/56, A47C 7/74, A47C 27/00, B60H 1/00, B60H 1/34
(31) Priority Document No	:2023-053450
(32) Priority Date	:29/03/2023
(33) Name of priority country	:Japan
(86) International Application No	:PCT/JP2024/011868
Filing Date	:26/03/2024
(87) International Publication No	:WO 2024/204152
(61) Patent of Addition to Application Number	:NA
Filing Date	:NA
(62) Divisional to Application Number	:NA
Filing Date	:NA

(71)**Name of Applicant :**
1)TS TECH CO., LTD.
Address of Applicant :7-27, Sakae-cho 3-chome, Asaka-shi, Saitama 3510012 Japan
(72)**Name of Inventor :**
1)MIZOI Kensuke
2)TAKANOHASHI Hiroshi

(57) Abstract :
Provided are: a vehicle seat capable of suppressing interference between a duct and a sensor; and a method for manufacturing the vehicle seat. This vehicle seat comprises: a seat frame (F) having left and right first side frames (11) disposed so as to be separated from each other in the left and right directions; a pressure-receiving member (30) that supports a seated person and is disposed between the left and right first side frames (11); a pad covering the seat frame (F) and the pressure-receiving member (30) and having a ventilation path therein; a blower (110); a duct (120) connecting the blower (110) and the ventilation path; and a sensor (140) capable of acquiring biological information about the seated person. The pressure-receiving member (30) has a center wire (32A) (reinforcing wire) extending in the front-rear direction. The duct (120) is disposed on one side in the left-right direction with respect to the center wire (32A), and the sensor (140) is disposed on the other side in the left-right direction with respect to the center wire (32A).

No. of Pages : 51 No. of Claims : 25

(12) PATENT APPLICATION PUBLICATION
(21) Application No.202547098475 A
(19) INDIA
(22) Date of filing of Application :13/10/2025
(43) Publication Date : 14/11/2025

(54) Title of the invention : LASER PROCESSING DEVICE, AND METHOD FOR MANUFACTURING LASER-PROCESSED ARTICLE

(51) International classification	:B23K 26/16, B23K 26/36
(31) Priority Document No	:2023-044158
(32) Priority Date	:20/03/2023
(33) Name of priority country	:Japan
(86) International Application No	:PCT/JP2023/043452
Filing Date	:05/12/2023
(87) International Publication No	:WO 2024/195210
(61) Patent of Addition to Application Number	:NA
Filing Date	:NA
(62) Divisional to Application Number	:NA
Filing Date	:NA

(71)**Name of Applicant :**
1)TOWA CORPORATION
Address of Applicant :5, Kamitoba Kamichoshi-cho, Minami-ku, Kyoto-shi, Kyoto 6018105 Japan
(72)**Name of Inventor :**
1)MOGAMI, Takuya
2)OKAWA, Hiroki
3)MIHARA, Takayuki

(57) Abstract :
Provided is a laser processing device capable of performing laser processing while efficiently sucking up dust. This laser processing device comprises: a stage (60); an outer peripheral wall section (30) that is arranged such that a hollow space (S) extends from a position near the stage (60) to a position distant from the stage (60); a cylindrical wall section (20) that divides the hollow space (S) into an inner space (S1) and an outer space (S2); an irradiation unit (40) that emits a laser beam (L) such that the laser beam passes through the inner space (S1) and irradiates a workpiece (W); a transparent member (50) that is provided so as to close the inner space (S1); and a lid member (10) that has a first opening (11) and is arranged between the cylindrical wall section (20) and the outer peripheral wall section (30) so as to close the outer space (S2). The cylindrical wall section (20) has a second opening (22) at a position that is nearer to the stage (60) than the transparent member (50) is to the stage (60).

No. of Pages : 15 No. of Claims : 9

(12) PATENT APPLICATION PUBLICATION
(21) Application No.202547098480 A
(19) INDIA
(22) Date of filing of Application :13/10/2025
(43) Publication Date : 14/11/2025

(54) Title of the invention : RUBBER COMPOSITION FOR RUBBER LAYER OF MULTILAYERED HOSE, MULTILAYERED HOSE, AND MULTILAYERED HOSE FOR MOTOR VEHICLE

(51) International classification	:F16L 11/08, B32B 1/08, B32B 25/08, B32B 27/06, C08K 5/3415
(31) Priority Document No	:2023-161827
(32) Priority Date	:26/09/2023
(33) Name of priority country	:Japan
(86) International Application No	:PCT/JP2024/033798
Filing Date	:24/09/2024
(87) International Publication No	:WO 2025/070333
(61) Patent of Addition to Application Number	:NA
Filing Date	:NA
(62) Divisional to Application Number	:NA
Filing Date	:NA

(71)**Name of Applicant :**
1)SUMITOMO RIKO COMPANY LIMITED
Address of Applicant :1, Higashi 3-chome, Komaki-shi, Aichi 4858550 Japan
(72)**Name of Inventor :**
1)MORITA Takahiro
2)HIRADO Motoki
3)HIRAI Ryo
4)NODA Masashi

(57) Abstract :
Provided is a multilayered hose having excellent layer-to-layer adhesion and excellent sealing properties. Also provided is a rubber composition for an inner-side rubber layer 1 and/or an outer-side rubber layer 3, the rubber composition comprising the following (A) to (D) components: (A) an ethylene/propylene/diene terpolymer, (B) a tackifier including a constituent unit derived from an aromatic monomer, (C) a bismaleimide compound, and (D) a vulcanizing agent.

No. of Pages : 22 No. of Claims : 12

(12) PATENT APPLICATION PUBLICATION
(21) Application No.202547098481 A
(19) INDIA
(22) Date of filing of Application :13/10/2025
(43) Publication Date : 14/11/2025

(54) Title of the invention : FASTENER AND HINGE STRUCTURE HAVING FASTENER

(51) International classification	:F16B 21/08, B62J 1/12, F16B 21/06
(31) Priority Document No	:2023-054690
(32) Priority Date	:30/03/2023
(33) Name of priority country	:Japan
(86) International Application No	:PCT/JP2024/003496
Filing Date	:02/02/2024
(87) International Publication No	:WO 2024/202531
(61) Patent of Addition to Application Number	:NA
Filing Date	:NA
(62) Divisional to Application Number	:NA
Filing Date	:NA

(71)**Name of Applicant :**
1)NIFCO INC.
Address of Applicant :5-3 Hikarinooka, Yokosuka-shi, Kanagawa 2398560 Japan
(72)**Name of Inventor :**
1)NAOI Hajime

(57) Abstract :
[Problem] To provide a fastener having favorable workability during assembly. [Solution] A fastener 55 is coupled to both ends of a shaft 53 which is inserted into a base 9 and a rotating body 33 in a state where both ends of the shaft protrude. The fastener comprises: a base part 60 extending along the axial direction of the shaft; and a pair of engagement parts 61 provided at both ends of the base part and including mutually opposing first surfaces 63. Each of the pair of engagement parts has: a receiving hole 65 having a bottom section 69 recessed from the first surface and opposing an end of the shaft; a groove section 67 extending from the receiving hole to an edge section 71 of the engagement part and allowing passage of the end of the shaft; and a locking part 77 provided in the groove section and locking the shaft.

No. of Pages : 20 No. of Claims : 7

(12) PATENT APPLICATION PUBLICATION
(21) Application No.202547098529 A
(19) INDIA
(22) Date of filing of Application :13/10/2025
(43) Publication Date : 14/11/2025

(54) Title of the invention : FIN-BASED FIELD EFFECT TRANSISTOR (FET) SOURCE/DRAIN STRAIN TO ENHANCE DRIVER CURRENT AND PERFORMANCE

(51) International classification	:H01L 21/8238, H01L 27/092, H01L 29/417, H01L 29/775, H01L 29/78
(31) Priority Document No	:18/334301
(32) Priority Date	:13/06/2023
(33) Name of priority country	:U.S.A.
(86) International Application No	:PCT/US2024/027096
Filing Date	:30/04/2024
(87) International Publication No	:WO 2024/258514
(61) Patent of Addition to Application Number	:NA
Filing Date	:NA
(62) Divisional to Application Number	:NA
Filing Date	:NA

(71)**Name of Applicant :**
1)QUALCOMM INCORPORATED
Address of Applicant :ATTN: International IP Administration 5775 Morehouse Drive San Diego, California 92121-1714 U.S.A.
(72)**Name of Inventor :**
1)LI, Xia
2)LIM, Kwanyong
3)YANG, Haining
4)PANDA, Biswa Ranjan
5)MANCHANA, Ramesh

(57) Abstract :
A field effect transistor (FET) device is described. The FET device includes a substrate, having a first vertical structure on the substrate, including a source/drain region, for example an NMOS source/drain region, having a first stressor material. The FET device also includes a second vertical structure on the substrate and including a drain/ source region, for example a PMOS drain/source region, having a second stressor material different from the first stressor material. The FET device further includes a metal gate on the first vertical structure and on the second vertical structure.

No. of Pages : 37 No. of Claims : 20

(12) PATENT APPLICATION PUBLICATION
(21) Application No.202547098530 A
(19) INDIA
(22) Date of filing of Application :13/10/2025
(43) Publication Date : 14/11/2025

(54) Title of the invention : FIELD-EFFECT TRANSISTORS (FETS) EMPLOYING THERMAL EXPANSION OF WORK FUNCTION METAL LAYERS FOR STRAIN EFFECT AND RELATED FABRICATION METHODS

(51) International classification	:H01L 29/06, H01L 27/088, H01L 29/423, H01L 29/49, H01L 29/66
(31) Priority Document No	:18/333004
(32) Priority Date	:12/06/2023
(33) Name of priority country	:U.S.A.
(86) International Application No	:PCT/US2024/031342
Filing Date	:29/05/2024
(87) International Publication No	:WO 2024/258604
(61) Patent of Addition to Application Number	:NA
Filing Date	:NA
(62) Divisional to Application Number	:NA
Filing Date	:NA

(71)**Name of Applicant :**
1)QUALCOMM INCORPORATED
Address of Applicant :ATTN: International IP Administration 5775 Morehouse Drive San Diego, California 92121-1714 U.S.A.
(72)**Name of Inventor :**
1)LI, Xia
2)YANG, Bin
3)YUAN, Jun

(57) Abstract :
Forces applied to the channel regions of semiconductor slabs in a first direction relative to the semiconductor slab, can create strains in the crystal structure that improve carrier mobility to improve drive strength in the channel region. In a three-dimensional (3D) FET structure (600), a work function metal layer (616) is provided on opposing faces of semiconductor slabs, for example nanosheets, to cause a force to be exerted on the channel regions (604(1), (2), (3)) in a first direction corresponding to current flow. A gate dielectric (612) is present between the channels (604(1), (2), (3)) and the work function metal layer, and furthermore a gate metal (608) surrounds the channels, the gate dielectric and the work function metals. The force in the first direction is either tensile force or compressive force, depending on a FET type (N or P) employing the semiconductor slab, and is provided to create strain in a crystalline structure of the semiconductor slab to improve carrier mobility in the channel region. Increasing carrier mobility in the channel regions in a 3D FET structure increases drive strength of the 3D FET, which saves area in an integrated circuit.

No. of Pages : 28 No. of Claims : 23

(12) PATENT APPLICATION PUBLICATION
(21) Application No.202547098531 A
(19) INDIA
(22) Date of filing of Application :13/10/2025
(43) Publication Date : 14/11/2025

(54) Title of the invention : HOST WORKLOAD PRIORITIZATION IN SPLIT EXTENDED REALITY (XR) SYSTEMS

(51) International classification	:G06F 1/3209, G06F 1/3215, G06F 1/3231, G06F 1/324, G06F 1/329
(31) Priority Document No	:202341032402
(32) Priority Date	:08/05/2023
(33) Name of priority country	:India
(86) International Application No	:PCT/US2023/081944
Filing Date	:30/11/2023
(87) International Publication No	:WO 2024/232941
(61) Patent of Addition to Application Number	:NA
Filing Date	:NA
(62) Divisional to Application Number	:NA
Filing Date	:NA

(71)**Name of Applicant :**
1)QUALCOMM INCORPORATED
Address of Applicant :ATTN: International IP Administration 5775 Morehouse Drive San Diego, California 92121-1714 U.S.A.
(72)**Name of Inventor :**
1)HOLLAND, Wesley James
2)BOOTH, Simon Peter William
3)BAHETI, Pawan Kumar

(57) Abstract :
A method for workload scheduling by a host device communicating with a head mounted display includes prioritizing processing of a first head mounted display (HMD) task in response to determining the host device is within a target wake time (TWT) window. The method also includes prioritizing processing of a host task in response to determining the host device is outside of the TWT window. The method may further include evaluating whether increasing processing core voltage and/or increasing processing core clock frequency would allow the host task to complete in time to allow enough time for a second head mounted display (HMD) task to finish processing before a next TWT window ends.

No. of Pages : 21 No. of Claims : 27

(12) PATENT APPLICATION PUBLICATION
(21) Application No.202547098561 A
(19) INDIA
(22) Date of filing of Application :13/10/2025
(43) Publication Date : 14/11/2025

(54) Title of the invention : SYSTEM AND METHOD FOR INCREASING SENSITIVITY OF A COLLISION AVOIDANCE SYSTEM OF A VEHICLE BASED ON DRIVER AWARENESS STATE

(51) International classification	:B60W 30/09, B60W 40/08, B60W 50/14
(31) Priority Document No	:18/141604
(32) Priority Date	:01/05/2023
(33) Name of priority country	:U.S.A.
(86) International Application No	:PCT/US2024/026738
Filing Date	:29/04/2024
(87) International Publication No	:WO 2024/228937
(61) Patent of Addition to Application Number	:NA
Filing Date	:NA
(62) Divisional to Application Number	:NA
Filing Date	:NA

(71)**Name of Applicant :**
1)BENDIX COMMERCIAL VEHICLE SYSTEMS LLC
Address of Applicant :35500 Chester Road Avon, Ohio 44011 U.S.A.
(72)**Name of Inventor :**
1)SASMAL, Subashish

(57) Abstract :
A system and method are provided for increasing sensitivity of a collision avoidance system of a vehicle based on driver awareness state. In one embodiment, a determination is made regarding whether or not the driver is alert based on an output of a sensor in the vehicle, such as a driver-facing camera or a sensor that detects a state of the vehicle. If the driver is found not to be alert, a lower confidence level threshold is used by a collision avoidance system of the vehicle (e.g., to more aggressively apply automatic braking). Other embodiments are provided.

No. of Pages : 9 No. of Claims : 20

(12) PATENT APPLICATION PUBLICATION
(21) Application No.202547098597 A
(19) INDIA
(22) Date of filing of Application :13/10/2025
(43) Publication Date : 14/11/2025

(54) Title of the invention : AIR CONDITIONING SYSTEM

(51) International classification	:F24F 1/0059, F24F 5/00, F24F 11/70, F24F 13/08, F24F 13/20
(31) Priority Document No	:2023-042968
(32) Priority Date	:17/03/2023
(33) Name of priority country	:Japan
(86) International Application No	:PCT/JP2024/008318
Filing Date	:05/03/2024
(87) International Publication No	:WO 2024/195522
(61) Patent of Addition to Application Number	:NA
Filing Date	:NA
(62) Divisional to Application Number	:NA
Filing Date	:NA

(71)**Name of Applicant :**
1)TAKASAGO THERMAL ENGINEERING CO., LTD.
Address of Applicant :6-27-30, Shinjuku, Shinjuku-ku, Tokyo 1600022 Japan
(72)**Name of Inventor :**
1)KUMAGAI, Hirohide
2)MATSUOKA, Shin

(57) Abstract :
The objective of the present invention is to provide an air conditioning system that suppresses air conditioning energy as far as possible in a space having a heat generation source. This air conditioning system performs displacement air conditioning of an air-conditioned room in which a device that generates heat is installed, and comprises: an air conditioning blowout port for blowing out air in a lower portion of the air-conditioned room; an air conditioning suction port for sucking in air in an upper portion of the air-conditioned room; a heat absorption coil through which the air sucked in from the air conditioning suction port passes; and an external conditioner that supplies outside air to the air-conditioned room and that includes a heating coil for heating the outside air by means of a heat medium that has passed through the heat absorption coil.

No. of Pages : 35 No. of Claims : 6

(12) PATENT APPLICATION PUBLICATION
(21) Application No.202547098627 A
(19) INDIA
(22) Date of filing of Application :13/10/2025
(43) Publication Date : 14/11/2025

(54) Title of the invention : SYSTEM AND METHOD FOR ENFORCING SERVICE CONTROL POLICIES FOR SERVICES AND SERVICE FEATURES

(51) International classification :G06F 9/50
(31) Priority Document No :63/462868
(32) Priority Date :28/04/2023
(33) Name of priority country :U.S.A.
(86) International Application No :PCT/US2024/026347
Filing Date :25/04/2024
(87) International Publication No :WO 2024/226856
(61) Patent of Addition to Application Number :NA
Filing Date :NA
(62) Divisional to Application Number :NA
Filing Date :NA

(71)**Name of Applicant :**
1)ORACLE INTERNATIONAL CORPORATION
Address of Applicant :500 Oracle Parkway, Mail Stop 5OP7 Redwood Shores, California 94065 U.S.A.
(72)**Name of Inventor :**
1)PRICA, Mihai
2)STOCKTON, Richard
3)SINGH, Prabhjot

(57) Abstract :
Embodiments described herein are generally related to systems and methods for providing cloud environments, for use by tenants of a cloud infrastructure environment in accessing software products, services, or other offerings associated with the environment, including methods for defining and enforcing service control policies directed to services and service features. In accordance with an embodiment, the system comprises a service control repository or service catalog that provides a definition of the services and service features, together with service control policies or rules that define availability or access to the service features. A service control policy framework, comprising a feature management service, determines, by reference to a hierarchy of entities defining the service control policies, which different entities can control the availability of particular services or service features to end users.

No. of Pages : 46 No. of Claims : 45

(12) PATENT APPLICATION PUBLICATION
(21) Application No.202547098681 A
(19) INDIA
(22) Date of filing of Application :13/10/2025
(43) Publication Date : 14/11/2025

(54) Title of the invention : RESPONDING TO TRIGGER EVENTS THAT THREATEN AN OPERABILITY OF A CLOUD INFRASTRUCTURE

(51) International classification :G06F 9/50
(31) Priority Document No :63/462875
(32) Priority Date :28/04/2023
(33) Name of priority country :U.S.A.
(86) International Application No :PCT/US2024/026895
Filing Date :29/04/2024
(87) International Publication No :WO 2024/227192
(61) Patent of Addition to Application Number :NA
Filing Date :NA
(62) Divisional to Application Number :NA
Filing Date :NA

(71)**Name of Applicant :**
1)ORACLE INTERNATIONAL CORPORATION
Address of Applicant :500 Oracle Parkway, M/S 50P7 Redwood Shores, California 94065 U.S.A.
(72)**Name of Inventor :**
1)PETERSON, Eric
2)MORAN, William Nickolas
3)VOGEL, Daniel M.
4)FOX, Kenneth Richard
5)WILLEY, Benjamin Todd

(57) Abstract :
Techniques for responding to a trigger event that threatens an operability of at least a portion of a cloud infrastructure of a cloud environment are disclosed. In response to detecting the occurrence of the trigger event, a system executes a mitigation process for mitigating an effect of the trigger event. The mitigation process includes determining a set of candidate services as candidates for stopping execution of operations in the cloud environment. In addition, the mitigation process generates a ranking of the set of candidate services based on weighting metrics associated with respective service features of the set of candidate services. Further, based on the ranking, the mitigation process selects a service of the set of candidate services and stops execution of operations of the service to at least partially mitigate the effect of the trigger event.

No. of Pages : 73 No. of Claims : 13

(12) PATENT APPLICATION PUBLICATION
(19) INDIA
(22) Date of filing of Application :13/10/2025
(21) Application No.202547098701 A
(43) Publication Date : 14/11/2025

(54) Title of the invention : SI- AND AL/SI-CONTAINING TOP COATINGS

(51) International classification	:C23C 28/04, C23C 28/00, C23C 14/02, C23C 14/06, C23C 14/08
(31) Priority Document No	:63/502745
(32) Priority Date	:17/05/2023
(33) Name of priority country	:U.S.A.
(86) International Application No	:PCT/EP2024/063821
Filing Date	:17/05/2024
(87) International Publication No	:WO 2024/236197
(61) Patent of Addition to Application Number	:NA
Filing Date	:NA
(62) Divisional to Application Number	:NA
Filing Date	:NA

(71)**Name of Applicant :**
1)OERLIKON SURFACE SOLUTIONS AG, PFÄFFIKON
Address of Applicant :Churerstrasse 120 8808 Pfäffikon Switzerland
(72)**Name of Inventor :**
1)RICHTER, Sophie
2)WIDRIG, Beno
3)HUNOLD, Oliver
4)ZAUNER, Lukas
5)RAMM, Jürgen
6)RIEDL-TRAGENREIF, Helmut

(57) Abstract :
The present invention relates to a coated substrate having a coated surface being formed by a surface of a substrate (1) and a coating provided on said substrate surface, the coating comprising at least one Si-containing coating film (200) and a base coating film (100) deposited between the substrate (1) and the Si-containing coating film (200), characterized in that, the base coating film (100) is applied between the substrate (1) and the Si-containing coating film (200), wherein the Si-containing coating film (200) comprises at least two Si-containing layers, a first Si-containing layer (210) and a second Si-containing layer (220), wherein the first Si-containing layer (210) is deposited closer to the base coating film (100) than the second Si-containing layer (220). Furthermore, the present invention relates to a method for producing a coated substrate.

No. of Pages : 29 No. of Claims : 11

(12) PATENT APPLICATION PUBLICATION
(21) Application No.202547098710 A
(19) INDIA
(22) Date of filing of Application :13/10/2025
(43) Publication Date : 14/11/2025

(54) Title of the invention : AIRBORNE SATELLITE ORBITAL SIMULATOR

(51) International classification	:H04B 7/185	(71)**Name of Applicant :**
(31) Priority Document No	:2303672.6	**1)QUADSAT APS**
(32) Priority Date	:13/03/2023	Address of Applicant :5270 Odense N Lufthavnvej 151 Denmark
(33) Name of priority country	:U.K.	(72)**Name of Inventor :**
(86) International Application No	:PCT/EP2024/056438	**1)CULOTTA-LOPEZ, Cosme**
Filing Date	:11/03/2024	**2)SKEIDSVOLL, Snorre STURLESON NORDAHL**
(87) International Publication No	:WO 2024/188972	**3)BUCHI, Andrian**
(61) Patent of Addition to Application Number	:NA	**4)ESPELAND, Joakim**
Filing Date	:NA	**5)HAASE, Milan Orlando**
(62) Divisional to Application Number	:NA	**6)POKORNY, Ondrej**
Filing Date	:NA	**7)OMI, Saki**

(57) Abstract :
Here discloses an apparatus for evaluating the ground terminal antenna and simulating satellite orbital trajectory using at least one unmanned aerial vehicle configured to emulate satellite movement based on a pseudo satellite trajectory. Apparatus encompasses a base station for establishing telemetry with a ground terminal antenna and said at least one unmanned aerial vehicle on a flight path designed for a planned scenario of a satellite. The base station is configured to process the telemetry data and perform one or more measurements based on a set of operational angles and target direction of said at least one unmanned aerial vehicle on the flight in relation to providing the orbital trajectory simulation of the satellite with respect to the planned scenario. One or more measurements comprise an offset measurement based on the set of operational angles of the ground terminal antenna in relation to the target direction of said at least one unmanned aerial vehicle; and a tracking accuracy measurement based on the set of operational angles of the ground terminal antenna and target direction of said at least one unmanned aerial vehicle following the flight path for a time period.

No. of Pages : 36 No. of Claims : 45

(12) PATENT APPLICATION PUBLICATION
(21) Application No.202547098761 A
(19) INDIA
(22) Date of filing of Application :13/10/2025
(43) Publication Date : 14/11/2025

(54) Title of the invention : A GEOTHERMAL HYDROGEN PRODUCTION AND COMPRESSION SYSTEM

(51) International classification	:F03G 4/00, C02F 1/04, C02F 1/44, C02F 103/08, C25B 1/04
(31) Priority Document No	:2023900697
(32) Priority Date	:15/03/2023
(33) Name of priority country	:Australia
(86) International Application No	:PCT/AU2024/050232
Filing Date	:15/03/2024
(87) International Publication No	:WO 2024/187243
(61) Patent of Addition to Application Number	:NA
Filing Date	:NA
(62) Divisional to Application Number	:NA
Filing Date	:NA

(71)**Name of Applicant :**
1)GOOD WATER ENERGY LTD
Address of Applicant :32A Second Avenue Claremont, Western Australia 6010 Australia
(72)**Name of Inventor :**
1)STRANGE, Warren Ross

(57) Abstract :
The present disclosure is directed to a geothermal hydrogen production and compression system, wherein the system comprises an impure water intake to receive water from a impure water source, at least one geothermal well having a well inlet to receive the impure water from the impure water intake in to the geothermal well and one or more well outlets adapted to return heated impure water from the geothermal well, one or more well outlets being adapted to direct the heated impure water from the geothermal well through a steam engine providing a mechanical output, a purification plant comprising one or more purification chambers for separating impurities from the heated impure water expelled from the steam engine to produce at least some fresh water, one or more discharge outlets to discharge one or more products of the purification plant wherein the fresh water is directed to an electrolyser for electrolysis to produce hydrogen gas, where the hydrogen gas is passed through a hydrogen compressor coupled to the mechanical output and pressurised in a storage apparatus.

No. of Pages : 28 No. of Claims : 22

(12) PATENT APPLICATION PUBLICATION
(21) Application No.202547098786 A
(19) INDIA
(22) Date of filing of Application :13/10/2025
(43) Publication Date : 14/11/2025

(54) Title of the invention : DISPARITY-BASED DEPTH REFINEMENT USING CONFIDENCE INFORMATION AND STEREOSCOPIC DEPTH INFORMATION

(51) International classification :G06T 7/593
(31) Priority Document No :18/327380
(32) Priority Date :01/06/2023
(33) Name of priority country :U.S.A.
(86) International Application No :PCT/US2024/021777
Filing Date :27/03/2024
(87) International Publication No :WO 2024/248926
(61) Patent of Addition to Application Number :NA
Filing Date :NA
(62) Divisional to Application Number :NA
Filing Date :NA

(71)**Name of Applicant :**
1)QUALCOMM INCORPORATED
Address of Applicant :Attn: International IP Administration 5775 Morehouse Drive San Diego, California 92121-1714 U.S.A.
(72)**Name of Inventor :**
1)JEONG, Jisoo
2)CAI, Hong
3)GARREPALLI, Risheek
4)PORIKLI, Fatih Murat
5)SAM, Mathew
6)TAHBOUB, Khalid
7)HAN, Bing

(57) Abstract :
Systems and techniques are provided for generating disparity information from two or more images. For example, a process can include obtaining first disparity information corresponding to a pair of images, the pair of images including a first image of a scene and a second image of the scene. The process can include obtaining confidence information associated with the first disparity information. The process can include processing, using a machine learning network, the first disparity information and the confidence information to generate second disparity information corresponding to the pair of images. The process can include combining, based on the confidence information, the first disparity information with the second disparity information to generate a refined disparity map corresponding to the pair of images.

No. of Pages : 56 No. of Claims : 30

(12) PATENT APPLICATION PUBLICATION
(21) Application No.202547098787 A
(19) INDIA
(22) Date of filing of Application :13/10/2025
(43) Publication Date : 14/11/2025

(54) Title of the invention : POWER-EFFICIENT, PERFORMANCE-EFFICIENT, AND CONTEXT-ADAPTIVE POSE TRACKING

(51) International classification :G06F 3/01
(31) Priority Document No :18/325752
(32) Priority Date :30/05/2023
(33) Name of priority country :U.S.A.
(86) International Application No :PCT/US2024/024097
Filing Date :11/04/2024
(87) International Publication No :WO 2024/248958
(61) Patent of Addition to Application Number :NA
Filing Date :NA
(62) Divisional to Application Number :NA
Filing Date :NA

(71)**Name of Applicant :**
1)QUALCOMM INCORPORATED
Address of Applicant :ATTN: International IP Administration 5775 Morehouse Drive San Diego, California 92121-1714 U.S.A.
(72)**Name of Inventor :**
1)TRIVEDI, Nisarg Keyurbhai
2)TENG, Diyan
3)HAN, Junsheng
4)KULIK, Victor
5)KULKARNI, Rashmi

(57) Abstract :
In some aspects, a pose tracking device may receive usability information from a sensor system that includes a plurality of sensors based on current operating conditions associated with the plurality of sensors. The pose tracking device may select a set of sensor modalities associated with the sensor system based on the usability information. The pose tracking device may select a pose tracking model based on the set of sensor modalities selected and one or more key performance indicator (KPI) requirements related to a current context associated with a pose tracking configuration for a client application. The pose tracking device may estimate a pose associated with an object using the pose tracking model based on sensor inputs associated with the one or more sensors selected from the plurality of sensors. Numerous other aspects are described.

No. of Pages : 29 No. of Claims : 30

(12) PATENT APPLICATION PUBLICATION
(21) Application No.202547098788 A
(19) INDIA
(22) Date of filing of Application :13/10/2025
(43) Publication Date : 14/11/2025

(54) Title of the invention : MACHINE-LEARNING-BASED PROXIMITY DETECTION USING IMPEDANCE

(51) International classification	:H04B 1/3827, G06N 3/08
(31) Priority Document No	:18/326509
(32) Priority Date	:31/05/2023
(33) Name of priority country	:U.S.A.
(86) International Application No	:PCT/US2024/021689
Filing Date	:27/03/2024
(87) International Publication No	:WO 2024/248925
(61) Patent of Addition to Application Number	:NA
Filing Date	:NA
(62) Divisional to Application Number	:NA
Filing Date	:NA

(71)**Name of Applicant :**
1)QUALCOMM INCORPORATED
Address of Applicant :ATTN: International IP Administration 5775 Morehouse Drive San Diego, California 92121-1714 U.S.A.
(72)**Name of Inventor :**
1)WINSLOW, David Loweth
2)BORO, John
3)CALZOLARI, Diego
4)FORRESTER, John

(57) Abstract :
Certain aspects of the present disclosure provide techniques and apparatus for improved machine learning. Impedance information for a wireless transmitter of a device is determined, and impedance change information is generated based on a difference between the impedance information and prior impedance information for the wireless transmitter. An off-body characteristic is generated based on processing the impedance change information using a trained machine learning model, where the off-body characteristic indicates a probability that the device was off-body when the impedance information was determined.

No. of Pages : 31 No. of Claims : 30

(12) PATENT APPLICATION PUBLICATION

(21) Application No.202547098865 A

(19) INDIA

(22) Date of filing of Application :13/10/2025

(43) Publication Date : 14/11/2025

(54) Title of the invention : A METHOD FOR NANO-DRILLING WITH USE OF A PARTICLE ACCELERATOR AND DEPOSITION OF CARBON NANOSTRUCTURES INSIDE THE DRILLED NANOHOLES, RELATED APPARATUS, AND NANOSTRUCTURED TANK FOR GAS STORAGE, SUCH AS HYDROGEN STORAGE

(51) International classification	:B81C 1/00
(31) Priority Document No	:102023000008493
(32) Priority Date	:28/04/2023
(33) Name of priority country	:Italy
(86) International Application No	:PCT/EP2024/061047
Filing Date	:23/04/2024
(87) International Publication No	:WO 2024/223541
(61) Patent of Addition to Application Number	:NA
Filing Date	:NA
(62) Divisional to Application Number	:NA
Filing Date	:NA

(71)**Name of Applicant :**

1)KEYDRO S.R.L.

Address of Applicant :Via Vittoria Colonna, 45 20149 Milano Italy

(72)**Name of Inventor :**

1)BOULAMAIL, Faiçal

2)DI PIETRANTONIO, Fabio

3)VILLAGROSSI, Aldo

4)SAGRAMOSO, Jacopo

(57) Abstract :

Method of nano-working comprising providing at least one workpiece at least partially made of polymeric material; providing an apparatus for nano-working comprising a particle accelerator and a working target; placing the workpiece near or at said working target; accelerating, by means of the particle accelerator, a particle beam towards the working target, so that to locally impact a train of accelerated particles to the workpiece, thereby drilling a through nanohole; drilling a plurality of through nanoholes next to one another into the workpiece, by means of impacting a plurality of trains of accelerated particles in a variety of portions of the workpiece, thereby obtaining a nano- drilled piece.

No. of Pages : 29 No. of Claims : 15

(12) PATENT APPLICATION PUBLICATION
(21) Application No.202431036544 A
(19) INDIA
(22) Date of filing of Application :08/05/2024
(43) Publication Date : 14/11/2025

(54) Title of the invention : RADIO FREQUENCY IDENTIFICATION BASED GENERIC STANDALONE AUDIO GUIDE SYSTEM.

(51) International classification	:G06K0007100000, G06K0007000000, G06K0019070000, G06K0019077000, G06F0021350000
(31) Priority Document No	:NA
(32) Priority Date	:NA
(33) Name of priority country	:NA
(86) International Application No	:NA
Filing Date	:NA
(87) International Publication No	: NA
(61) Patent of Addition to Application Number	:NA
Filing Date	:NA
(62) Divisional to Application Number	:NA
Filing Date	:NA

(71)**Name of Applicant :**
1)DIRECTOR, CENTRAL RESEARCH AND TRAINING LABORATORY KOLKATA
Address of Applicant :33, Block GN, Sector-5, Bidhannagar, Kolkata West Bengal India Kolkata West Bengal India
(72)**Name of Inventor :**
1)Arijit Dutta Chowdhury
2)Pramod Grover
3)Manash Bagchi
4)Shatadal Ghosh

(57) Abstract :
ABSTRACT TITLE RADIO FREQUENCY IDENTIFICATION BASED GENERIC STANDALONE AUDIO GUIDE SYSTEM A portable audio guide system comprising a Radio Frequency Identification Device (RFID) tag reader, an audio player and a microcontroller operatively connected to said RFID tag reader and said audio player. The said microcontroller is configured for diving said RFID tag reader to scan any available nearby RFID tag attached with an exhibit, whereby each time the RFID reader detects such RFID tag, the microcontroller identifies the exhibit based a unique number loaded in the RFID tag as read by the RFID tag reader. The microcontroller is configured for sending a signal to the audio player according to the identified exhibit for playing corresponding audio.

No. of Pages : 14 No. of Claims : 6

(12) PATENT APPLICATION PUBLICATION
(21) Application No.202431037164 A
(19) INDIA
(22) Date of filing of Application :10/05/2024
(43) Publication Date : 14/11/2025

(54) Title of the invention : A low-cost microfluidic channel device and the process of fabrication

(51) International classification	:B01L0003000000, G11C0016040000, B81C0001000000, G03G0015080000, H01L0021322000
(31) Priority Document No	:NA
(32) Priority Date	:NA
(33) Name of priority country	:NA
(86) International Application No	:NA
Filing Date	:NA
(87) International Publication No	: NA
(61) Patent of Addition to Application Number	:NA
Filing Date	:NA
(62) Divisional to Application Number	:NA
Filing Date	:NA

(71)**Name of Applicant :**
1)INDIAN INSTITUTE OF TECHNOLOGY KHARAGPUR
Address of Applicant :Sponsored Research & Industrial Consultancy, Indian Institute of Technology Kharagpur Kharagpur West Bengal India Kharagpur West Bengal India
(72)**Name of Inventor :**
1)Ragavi Rajasekaran
2)Venkata sundeep seesala
3)Mamoni Banerjee
4)Dr. Santanu Dhara

(57) Abstract :
ABSTRACT TITLE OF INVENTION: A low-cost microfluidic channel device and the process of fabrication A cost-effective and reusable device comprising microfluidic channels has been developed using a hot press technique to seal the channels without the need for solvents. The microchannel design was created using CoralDRAW software, and paths were engraved onto a PMMA sheet using a VersaLASER® (VLS) machine. A thermoplastic polymer laminating sheet, such as Parafilm® M tape, was used to seal the channel and well, and a simple hot press technique was employed. A conductive sheet, such as platinum or silver, was shaped and embedded in the microchip. A simplified heat press technique was employed to fabricate a reusable microchannel model that incorporated an inbuilt IDE. The system can be customized for specific applications to replicate desired in vivo models. The fabrication method of the present invention provides a convenient and efficient approach for producing microchannel models with integrated IDEs, enabling their repeated use in various applications. Fig. 1

No. of Pages : 32 No. of Claims : 9

(12) PATENT APPLICATION PUBLICATION
(21) Application No.202431037166 A
(19) INDIA
(22) Date of filing of Application :10/05/2024
(43) Publication Date : 14/11/2025

(54) Title of the invention : TUNABLE SELF-OSCILLATING INTEGRATED RECEIVER FOR COGNITIVE RADIOS.

(51) International classification	:H02M0003338000, H01Q0001240000, H04B0001480000, H03H0019000000, H03D0007120000
(31) Priority Document No	:NA
(32) Priority Date	:NA
(33) Name of priority country	:NA
(86) International Application No	:NA
Filing Date	:NA
(87) International Publication No	: NA
(61) Patent of Addition to Application Number	:NA
Filing Date	:NA
(62) Divisional to Application Number	:NA
Filing Date	:NA

(71)**Name of Applicant :**
1)INDIAN INSTITUTE OF TECHNOLOGY KHARAGPUR
Address of Applicant :Sponsored Research & Industrial Consultancy, Indian Institute of Technology Kharagpur, Kharagpur West Bengal India Kharagpur West Bengal India
(72)**Name of Inventor :**
1)Rijubrata Pal
2)Mrinal Kanti Mandal

(57) Abstract :
ABSTRACT Title: TUNABLE SELF-OSCILLATING INTEGRATED RECEIVER FOR COGNITIVE RADIOS The present invention discloses an active antenna integrated self-oscillating mixer receiver system comprising a local oscillator (LO), a single wideband filtering antenna configured to simultaneously serve as a receiving antenna, impedance matching network, local oscillator (LO) feedback path, image rejection filter, and LO band-stop filter (BSF) and a wideband impedance transforming network (WBITN) operatively connected to the antenna enabling integration of the antenna to the LO with wide tuning range of the LO.

No. of Pages : 19 No. of Claims : 9

(12) PATENT APPLICATION PUBLICATION
(21) Application No.202431037167 A
(19) INDIA
(22) Date of filing of Application :10/05/2024
(43) Publication Date : 14/11/2025

(54) Title of the invention : COHERENT DIGITAL AUTOMATIC GAIN CONTROL SYSTEM AND METHOD WITH SLIDING WINDOW MECHANISM

(51) International classification	:H03G0003300000, H04L0047270000, E06B0003460000, G06F0011160000, E05D0015160000
(31) Priority Document No	:NA
(32) Priority Date	:NA
(33) Name of priority country	:NA
(86) International Application No	:NA
Filing Date	:NA
(87) International Publication No	: NA
(61) Patent of Addition to Application Number	:NA
Filing Date	:NA
(62) Divisional to Application Number	:NA
Filing Date	:NA

(71)**Name of Applicant :**
1)INDIAN INSTITUTE OF TECHNOLOGY KHARAGPUR
Address of Applicant :Sponsored Research & Industrial consultancy, Indian Institute of Technology Kharagpur; Kharagpur, West Bengal India Kharagpur West Bengal India
(72)**Name of Inventor :**
1)Sreeparna Kundu
2)Dr. Amit Kumar Dutta

(57) Abstract :
ABSTRACT Title: COHERENT DIGITAL AUTOMATIC GAIN CONTROL SYSTEM AND METHOD WITH SLIDING WINDOW MECHANISM The present invention discloses a closed loop regulation based digital automatic gain control (AGC) unit for stabilizing input signal in a noisy environment and maintains output gain of the input signal at a constant level, comprising a noise rejection filter for filtering the input signal through thresholding operation, a gain correction unit to apply a variable gain to the input signal, an evaluation unit to select proper threshold for thresholding operation and a control signal generator which feedback to the gain correction unit to amplify and modify the gain based on selectively either proportional feedback control or mean square error feedback control and utilizing a sliding window mechanism over the input signal till achieving the constant gain level.

No. of Pages : 29 No. of Claims : 12

(12) PATENT APPLICATION PUBLICATION
(21) Application No.202431037173 A
(19) INDIA
(22) Date of filing of Application :10/05/2024
(43) Publication Date : 14/11/2025

(54) Title of the invention : BUBBLE WRAPPING TO PROTECT SUPER CAPACITOR

(51) International classification	:H01G2/10, H01G11/78
(31) Priority Document No	:NA
(32) Priority Date	:NA
(33) Name of priority country	:NA
(86) International Application No	:NA
Filing Date	:NA
(87) International Publication No	: NA
(61) Patent of Addition to Application Number	:NA
Filing Date	:NA
(62) Divisional to Application Number	:NA
Filing Date	:NA

(71)**Name of Applicant :**
1)INDIAN INSTITUTE OF TECHNOLOGY KHARAGPUR
Address of Applicant :Sponsored Research & Industrial consultancy, Indian Institute of Technology Kharagpur; Kharagpur, West Bengal India Kharagpur West Bengal India
(72)**Name of Inventor :**
1)Dr. Sudipta Biswas
2)Dr. Debabrata Mandal
3)Dr. Ananya Chowdhury
4)Dr. Vikas Sharma
5)Prof. Amreesh Chandra

(57) Abstract :
ABSTRACT Title: BUBBLE WRAPPING TO PROTECT SUPER CAPACITOR. A packaging setup to protect performance decrement of electrochemical devices including super-capacitors under external vibration comprising bubble wrapper layers attached on both side surface of the electrochemical device cell. Evenly arranged air filled pockets are provided on the bubble wrapper layers which absorbs a significant portion of external shock or vibration to electrochemical device cell and thereby prevents the external vibration creating a standing wave within electrolyte of the electrochemical device cell and disturbing electric double layer thereof.

No. of Pages : 20 No. of Claims : 4

(12) PATENT APPLICATION PUBLICATION
(21) Application No.202431037178 A
(19) INDIA
(22) Date of filing of Application :10/05/2024
(43) Publication Date : 14/11/2025

(54) Title of the invention : A low-cost bioreactor for multiple tissue regeneration applications.

(51) International classification	:C12M0001000000, A61P0043000000, C12M0003000000, C12M0001020000, A61K0048000000	(71)**Name of Applicant :** **1)INDIAN INSTITUTE OF TECHNOLOGY KHARAGPUR** Address of Applicant :Sponsored Research & Industrial Consultancy, Indian Institute of Technology Kharagpur Kharagpur West Bengal India Kharagpur West Bengal India
(31) Priority Document No	:NA	(72)**Name of Inventor :**
(32) Priority Date	:NA	**1)Prasanna Kumar Byram**
(33) Name of priority country	:NA	**2)Krishna Chaitanya Sunka**
(86) International Application No	:NA	**3)Dr. Santanu Dhara**
Filing Date	:NA	**4)Dr. Nishant Chakravorty**
(87) International Publication No	: NA	
(61) Patent of Addition to Application Number	:NA	
Filing Date	:NA	
(62) Divisional to Application Number	:NA	
Filing Date	:NA	

(57) Abstract :
ABSTRACT TITLE: A low-cost bioreactor for multiple tissue regeneration applications. The present invention relates to a bioreactor designed and fabricated for the development of various tissues like bone, cartilage and skin. The tissue construct developed using the bioreactors reduce the number of surgery and healing time of the damaged tissue. The dependence on the hospital for tissue requirements will be reduced. And also, tissue engineering and regenerative medicine labs can also use the bioreactor for experimental purposes in regeneration studies of tissues. Furthermore, exploratory research can be performed using different types of scaffolds, and cells, with/without growth factor and their comparative studies can be performed for various tissue and their development studies. Considering the application of the bioreactor, it is very likely to have commercial value in the near future. Figure 1

No. of Pages : 25 No. of Claims : 19

(12) PATENT APPLICATION PUBLICATION
(21) Application No.202431037274 A
(19) INDIA
(22) Date of filing of Application :11/05/2024
(43) Publication Date : 14/11/2025

(54) Title of the invention : Improved Synthetic Methodology for Pure Regioisomeric Dibrominated Perylene Diimide and Their Conjugates

(51) International classification	:A61P0043000000, A61P0035000000, B32B0005140000, B29C0031100000, B32B0005160000
(31) Priority Document No	:NA
(32) Priority Date	:NA
(33) Name of priority country	:NA
(86) International Application No	:NA
Filing Date	:NA
(87) International Publication No	: NA
(61) Patent of Addition to Application Number	:NA
Filing Date	:NA
(62) Divisional to Application Number	:NA
Filing Date	:NA

(71)**Name of Applicant :**
1)INDIAN INSTITUTE OF TECHNOLOGY KHARAGPUR
Address of Applicant :Sponsored Research & Industrial Consultancy, Indian Institute of Technology Kharagpur Kharagpur West Bengal India 721302 Kharagpur West Bengal India
(72)**Name of Inventor :**
1)Dr. Sanjib K. Patra
2)Ms Poulami Panja

(57) Abstract :
ABSTRACT TITLE: Improved Synthetic Methodology for Pure Regioisomeric Dibrominated Perylene Diimide and Their Conjugates A process for precursor synthesis for supramolecular molecules is provided more specifically an improved method for synthesis of pure regioisomeric dibrominated perylene diimide is provided together with their unique conjugates. Figure 9

No. of Pages : 22 No. of Claims : 10

(12) PATENT APPLICATION PUBLICATION
(21) Application No.202434064822 A
(19) INDIA
(22) Date of filing of Application :28/08/2024
(43) Publication Date : 14/11/2025

(54) Title of the invention : ALL-PLASTIC RECYCLABLE PRESSING PUMP

(51) International classification	:B05B0011100000, B05B0011000000, F16K0031060000, A47K0005120000, A61J0001140000
(31) Priority Document No	:202410570900.3
(32) Priority Date	:09/05/2024
(33) Name of priority country	:China
(86) International Application No	:NA
Filing Date	:NA
(87) International Publication No	: NA
(61) Patent of Addition to Application Number	:NA
Filing Date	:NA
(62) Divisional to Application Number	:NA
Filing Date	:NA

(71)**Name of Applicant :**
1)MAJESTY HOLDINGS CO.,LTD.
Address of Applicant :No.21 Health Road, Torch Development District, Zhongshan, Guangdong, 528437, P.R. China China
(72)**Name of Inventor :**
1)LIANG, Peihui
2)ZHU, Maoyong
3)LIANG, Jinkao
4)ZHANG, Yonglei

(57) Abstract :
Disclosed is an all-plastic recyclable pressing pump, including a pump body, where the pump body is provided with a pump chamber, and a bottle locking cap is connected to the pump body; a liquid extraction assembly is provided in the pump chamber; the liquid extraction assembly includes a pump rod, and a bent nozzle is connected to an upper end of the pump rod; a liquid outlet channel is arranged in the bent nozzle, and a locking cap capable of limiting the liquid extraction assembly from disengaging from the pump chamber is provided in the pump chamber; a latching mechanism capable of limiting a downward movement of the bent nozzle when the bent nozzle stays in a latching position is provided between the pump rod and the locking cap; a scavenge port is arranged on a wall of the pump chamber; a lower end of the pump chamber is provided with a one-way valve capable of allowing the liquid in the bottle body to pass through and enter the pump chamber when the liquid extraction assembly moves; a lower part of the liquid extraction assembly is provided with a control valve capable of controlling the liquid in the pump chamber to be ejected from the liquid outlet channel; the locking cap is provided with a lower conical projection with a small upper part and a large lower part; the bent nozzle is provided with an upper conical projection with a large upper part and a small lower part; the pump rod between the locking cap and the bent nozzle is provided with an annular elastic piece capable of resetting the liquid extraction assembly after the liquid extraction assembly is pressed down; the annular elastic piece is provided with at least two outwardly protruding protrusions, and an inwardly recessed recess is arranged between two adjacent protrusions. The recesses replace openings to reduce an elastic coefficient of the annular elastic piece so that the annular elastic piece is more easily deformed and has a better rebound effect. There is no need to cut out openings to damage the structural strength of the annular elastic piece, which improves its service life and reduces the generation of transverse stresses, resulting in smoother movement.

No. of Pages : 20 No. of Claims : 9

(12) PATENT APPLICATION PUBLICATION
(21) Application No.202439037406 A
(19) INDIA
(22) Date of filing of Application :13/05/2024
(43) Publication Date : 14/11/2025

(54) Title of the invention : AN IMPROVED METHOD FOR EVALUATION OF BIOAVAILABILITY AND BIOEQUIVALENCE IN VIVO IN HUMANS

(51) International classification	:A61P0003100000, A61K0031640000, A61K0009200000, A61P0003000000, A61P0043000000
(31) Priority Document No	:NA
(32) Priority Date	:NA
(33) Name of priority country	:NA
(86) International Application No	:NA
Filing Date	:NA
(87) International Publication No	: NA
(61) Patent of Addition to Application Number	:
Filed on	:01/01/1900
(62) Divisional to Application Number	:NA
Filing Date	:NA

(71)**Name of Applicant :**
1)DEBASISH BANERJEE
Address of Applicant :House No': 15K street : Behary Doctor Road CitY : Kolkata State : West Bengal Country : INDIA Pin code: 700025 West Bengal India
(72)**Name of Inventor :**
1)DEBASISH BANERJEE
2)SUBHAKANTA DHAL
3)SOUMYARANJAN PAHADSINGH
4)SUNITA BEHERA
5)ANANYA TRIPATHY

(57) Abstract :
Here' cornpared the main application, we have developed a method conrparison a more accurate method for of drug effects, where the effect of drugs, have been monitored throughout the entire duratron of action' after administration to human subjects, giving thereby a better evaluation of drug action' TJe have by this method compared the pharmacological effects of gliclazide and,glyburide. we have also' bv this rnethod, compared the effect of acarbose, to sucrose, the substrate for amyrase and have found that acarbose has an affinity 57000 times that of sucrose, thereby explaining why acarbose replaces sucrose so easily on the amylase receptor, an achievement done for the 1st time in the wor:ld.

No. of Pages : 18 No. of Claims : 5

(12) PATENT APPLICATION PUBLICATION
(19) INDIA
(22) Date of filing of Application :29/04/2025
(21) Application No.202534041543 A
(43) Publication Date : 14/11/2025

(54) Title of the invention : CAPTURING OPTICAL LENS ASSEMBLY, IMAGE CAPTURING UNIT AND ELECTRONIC DEVICE

(51) International classification	:G02B0009640000, G02B0013000000, G02B0027000000, G11B0007137800, B60T0013140000
(31) Priority Document No	:113116934
(32) Priority Date	:08/05/2024
(33) Name of priority country	:Taiwan
(86) International Application No	:NA
Filing Date	:NA
(87) International Publication No	: NA
(61) Patent of Addition to Application Number	:NA
Filing Date	:NA
(62) Divisional to Application Number	:NA
Filing Date	:NA

(71)**Name of Applicant :**
1)LARGAN Precision Co., Ltd.
Address of Applicant :No.11, Jingke Rd., Nantun Dist., Taichung City, Taiwan, R.O.C. Taiwan
(72)**Name of Inventor :**
1)YEH, Kuan-Ting
2)SHIH, YU-HAN

(57) Abstract :
ABSTRACT Title: CAPTURING OPTICAL LENS ASSEMBLY, IMAGE CAPTURING UNIT AND ELECTRONIC DEVICE 5 A capturing optical lens assembly includes eight lens elements (E1, E2, E3, E4, E5, E6, E7, E8) which are, in order from an object side to an image side along an optical path: a first lens element (E1), a second lens element (E2), a third lens element (E3), a fourth lens element (E4), a fifth lens element (E5), a sixth lens element (E6), a seventh lens element (E7) and an eighth lens 10 element (E8). The first lens element (E1) has negative refractive power. The fourth lens element (E4) has an object-side surface being convex in a paraxial region thereof. The fifth lens element (E5) has an image-side surface being concave in a paraxial region thereof. The seventh lens element (E7) has an object-side surface having at least one inflection point (P). The eighth lens 15 element (E8) with negative refractive power has an object-side surface being concave in a paraxial region thereof. FIG. 1

No. of Pages : 187 No. of Claims : 29

(12) PATENT APPLICATION PUBLICATION
(21) Application No.202537064334 A
(19) INDIA
(22) Date of filing of Application :05/07/2025
(43) Publication Date : 14/11/2025

(54) Title of the invention : NEUROMODULATION SYSTEM TO INDUCE CHANGES IN GLYCEMIC REGULATORY SYSTEM PLASTICITY

(51) International classification	:A61N 1/05, A61N 1/36, A61N 1/372, A61N 1/08
(31) Priority Document No	:63/477996
(32) Priority Date	:30/12/2022
(33) Name of priority country	:U.S.A.
(86) International Application No	:PCT/US2023/086459
Filing Date	:29/12/2023
(87) International Publication No	:WO 2024/145596
(61) Patent of Addition to Application Number	:NA
Filing Date	:NA
(62) Divisional to Application Number	:NA
Filing Date	:NA

(71)**Name of Applicant :**
1)RESHAPE LIFESCIENCES, INC.
Address of Applicant :2800 Patton Road St. Paul, Minnesota 55113 U.S.A.
(72)**Name of Inventor :**
1)WAATAJA, Jonathan James
2)NIHALANI, Raj

(57) Abstract :
Current Type 2 Diabetes Mellitus treatments include life-style management, pharmaceuticals and may include bariatric surgery for the morbidly obese. However, issues with compliance, side effects and permanent anatomical alterations provide a need for an alternative therapy to modulate a peripheral nerve, such as the vagus nerve, in a manner that causes a plastic change in the glycemic regulatory system, with or without the involvement of the central nervous system (CNS), that changes the activity of an organ and thereby changing the activity of that organ. Low energy vagus nerve neuromodulation has potential as a new treatment for type 2 diabetes mellitus by inducing plasticity of the body's glycemic regulatory system with low energy transient stimulation. This will allow for effective use of a small implantable pulse generator that requires infrequent, or no, charging during the life of the device.

No. of Pages : 30 No. of Claims : 28

(12) PATENT APPLICATION PUBLICATION
(21) Application No.202537095453 A
(19) INDIA
(22) Date of filing of Application :04/10/2025
(43) Publication Date : 14/11/2025

(54) Title of the invention : METHOD FOR PRODUCING RESIN MOLDED ARTICLE, MOLDING MOLD AND RESIN MOLDING APPARATUS

(51) International classification	:B29C 33/68, B29C 43/34, B29C 43/50
(31) Priority Document No	:2023-035729
(32) Priority Date	:08/03/2023
(33) Name of priority country	:Japan
(86) International Application No	:PCT/JP2023/039034
Filing Date	:30/10/2023
(87) International Publication No	:WO 2024/185191
(61) Patent of Addition to Application Number	:NA
Filing Date	:NA
(62) Divisional to Application Number	:NA
Filing Date	:NA

(71)**Name of Applicant :**
1)TOWA CORPORATION
Address of Applicant :5, Kamitoba Kamichoshi-cho, Minami-ku, Kyoto-shi, Kyoto 6018105 Japan
(72)**Name of Inventor :**
1)YOSHIDA Yusuke
2)ONISHI Yohei
3)SUNADA Mamoru
4)MORIKAMI Atsushi

(57) Abstract :
Provided is a method for producing a resin molded article, the method suppressing the occurrence of wrinkles in a mold release film during compression molding using the mold release film, and also suppressing the formation of resin projections that may drop during conveyance of the resin molded article after resin molding. In the method for producing a resin molded article according to the present disclosure: in a resin molding step, a molding object is disposed between an upper mold and a lower mold (200), a mold release film is disposed on the bottom surface and the side surface of a cavity (200A), and a resin molded article is produced by performing resin molding by means of compression molding, in which a molding mold is clamped, with a resin material being disposed on the mold release film; and in a conveyance step, the molding mold is opened after the resin molding step, and the resin molded article is taken out from the molding mold and conveyed. At the upper surface of a lower-mold side surface member (201), a depth difference (201D) that is equal to or less than the thickness of the mold release film is formed in a position at which the upper surface is adjacent to the inner peripheral surface of the lower-mold side surface member (201).

No. of Pages : 28 No. of Claims : 12

(12) PATENT APPLICATION PUBLICATION
(21) Application No.202537096882 A
(19) INDIA
(22) Date of filing of Application :08/10/2025
(43) Publication Date : 14/11/2025

(54) Title of the invention : ENERGY ABSORPTION MEMBER WITH A CONE-STRUCTURE

(51) International classification	:B62D 21/15, F16F 7/12
(31) Priority Document No	:23167410.2
(32) Priority Date	:11/04/2023
(33) Name of priority country	:EPO
(86) International Application No	:PCT/EP2024/059198
Filing Date	:04/04/2024
(87) International Publication No	:WO 2024/213463
(61) Patent of Addition to Application Number	:NA
Filing Date	:NA
(62) Divisional to Application Number	:NA
Filing Date	:NA

(71)**Name of Applicant :**
1)ZEPHYROS, INC.
Address of Applicant :160 Mclean Drive Romeo, Michigan 48065 U.S.A.
(72)**Name of Inventor :**
1)IGNES I MULLOL, Nuria
2)ALI-LARNENE, Amar

(57) Abstract :
The present invention relates to a member to absorb energy, particularly impact-energy. The present invention further relates to a structure comprising the member and a method to absorb energy, particularly impact energy.

No. of Pages : 15 No. of Claims : 18

(12) PATENT APPLICATION PUBLICATION
(21) Application No.202537101290 A
(19) INDIA
(22) Date of filing of Application :21/10/2025
(43) Publication Date : 14/11/2025

(54) Title of the invention : DISPLAY METHOD AND ELECTRONIC DEVICE

(51) International classification :G06F 9/451
(31) Priority Document No :202310886138.5
(32) Priority Date :18/07/2023
(33) Name of priority country :China
(86) International Application No :PCT/CN2024/104985
Filing Date :11/07/2024
(87) International Publication No :WO 2025/016283
(61) Patent of Addition to Application Number :NA
Filing Date :NA
(62) Divisional to Application Number :NA
Filing Date :NA

(71)**Name of Applicant :**
1)HUAWEI TECHNOLOGIES CO., LTD.
Address of Applicant :Huawei Administration Building, Bantian, Longgang Shenzhen, Guangdong 518129 China
(72)**Name of Inventor :**
1)WANG, Hongjun
2)CHEN, Yifan
3)ZHANG, Yanan
4)HWANG, Wooseok
5)TAI, Yankun
6)ZHOU, Yuxiao

(57) Abstract :
Provided in the present application are a display method and an electronic device. The method can be applied to an electronic device, wherein a first display interface of the electronic device comprises an entry identifier used for calling an AI service. The method comprises: performing detection on a first operation for an entry identifier; and in response to the first operation, displaying a second display interface used for interacting with an AI service. In the technical solution, a display interface of an electronic device may comprise an entry identifier used for calling an AI service, and a user may call, by means of operating the entry identifier, a display interface used for interacting with the AI service, and therefore the user can conveniently use the AI service in the electronic device.

No. of Pages : 70 No. of Claims : 19

CONTINUED TO PART- 3