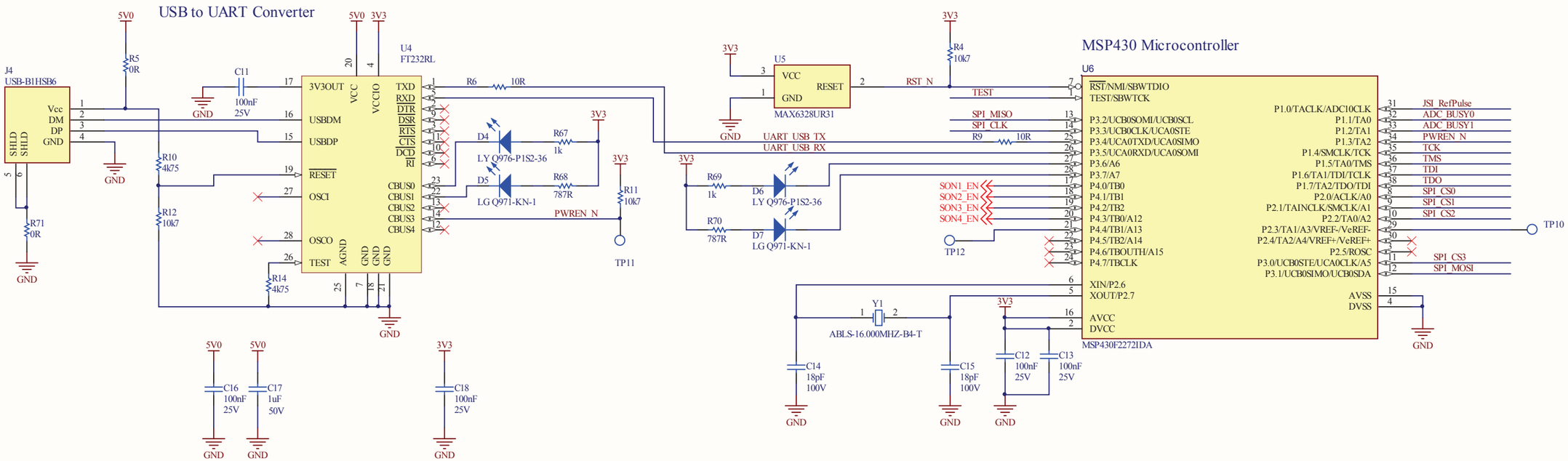
USB to UART Converter
J4
USB-B1HSB6
U4
FT232RL
3V3OUT
USBDM
USBDP
RESET
OSCI
OSCO
TEST
VCC
VCCIO
AGND
TXD
RXD
DTR
DSR
RTS
CTS
DCD
RI
CBUS0
CBUS1
CBUS2
CBUS3
CBUS4
R5 0R
R10 4k75
R12 10k7
R14 4k75
R71 0R
C11 100nF 25V
R6 10R
D4 LY Q976-P1S2-36
D5 LG Q971-KN-1
R67 1k
R68 787R
R11 10k7
TP11
PWREN_N
C16 100nF 25V
C17 1uF 50V
C18 100nF 25V
U5
MAX6328UR31
RST_N
R4 10k7
UART_USB_TX
UART_USB_RX
R69 1k
R70 787R
D6 LY Q976-P1S2-36
D7 LG Q971-KN-1
MSP430 Microcontroller
U6
MSP430F2272IDA
TEST
SPI_MISO
SPI_CLK
R9 10R
SON1_EN
SON2_EN
SON3_EN
SON4_EN
TP12
TP10
JSI_RefPulse
ADC_BUSY0
ADC_BUSY1
PWREN_N
TCK
TMS
TDI
TDO
SPI_CS0
SPI_CSI
SPI_CS2
SPI_CS3
SPI_MOSI
XIN/P2.6
XOUT/P2.7
AVCC
DVCC
AVSS
DVSS
Y1
ABLS-16.000MHZ-B4-T
C14 18pF 100V
C15 18pF 100V
C12 100nF 25V
C13 100nF 25V
Level Translation (Input to MSP430)
U7
SN74AVC4T245PW
R15 0R
R16 4k75
R17 4k75
JSI_RefPulse_5V
SPI_MISO_5V
ADC_BUSY0_5V
ADC_BUSY1_5V
JSI_RefPulse
SPI_MISO
ADC_BUSY0
ADC_BUSY1
TP15
C19 100nF 25V
C20 100nF 25V
Level Translation (Output from MSP430)
U8
SN74LVC8T245PW
R18 0R
R19 4k75
R20 4k75
SPI_CS0_5V
SPI_CS1_5V
SPI_ADC_CLK_5V
SPI_POT_CLK_5V
SPI_ADC_MOSI_5V
SPI_POT_MOSI_5V
SPI_CS2_5V
SPI_CS3_5V
SPI_CS0
SPI_CS1
SPI_CLK
SPI_MOSI
SPI_CS2
SPI_CS3
TP16
TP17
TP18
TP19
C21 100nF 25V
C22 100nF 25V
Programming Header
P2
Header 7X2
TDO
TDI
TMS
TCK
RST_N
TEST
VCC_TOOL
VCC_TARG
DNP
R23 0R
R24 0R
Title
Size
Tabloid
Number
Revision
Date: 3/24/2012
Sheet of
File: C:\Documents and Settings\...\S02_Digital_Interface.SchDoc
Drawn By: