OMAP-L138/C6748 LC Dev Kit

VER/REV #	DESCRIPTION	PREPARED BY	RELEASE DATE	APPROVED BY
A	Initial Release	CCO	17-0ct-2011	TI
A1	BOOT PIN PULLUPS CHNAGED TO 5.6K. DNI PARTS UPDATED	CCO	15-NOV-2011	TI
A2	Issue with U27 resolved. Added D8 in place of R269. Added a 10K pullup to U2-3.	CCO	04-DEC-2011	TI
A3	JTAG circuit changed	CCO	14-DEC-2011	TI
A4	LAN8710A symbol corrected. Added pullups.	CCO	16-DEC-2011	TI
A5	Connect RVDD0/1/2 to VCC_1V3D instead of 1V2_LDO The capacitor C107 connected to VCC_3V3ADAC	CCO	22-FEB-2012	TI
A6	U26 is DNIed	CCO	14-NOV-2012	TI
A6a	U8 part number corrected to MT29F4G16ABADAH4	CCO	06-MAR-2013	TI
A7E	J10 changed to CX3.5-1230-08, J14&J15 CHANGED TO 2254-501223G0ASUT , P1&P2 CHANGED TO 2127-431210G0CSUT	PTI	03-FEB-2015	TI

Texas Instruments, Inc.

Title: OMAP-L138/C6748 LC Dev Kit

Size: C | Document Number: <Doc> | Rev: A7E

Date: Monday, May 18, 2015 | Sheet 1 of 12

PAGE #	PAGE TITLE	PAGE DESCRIPTION
1	TITLE	TITLE OF THE SCHEMATICS
2	TABLE OF CONTENTS	TABLE OF CONTENTS
3	BLOCK DIAGRAM	TOP LEVEL BLOCK DIAGRAM OF THE SCHEMATICS
4	POWER & RESET	COMPLETE POWER SUPPLY CIRCUITRY ON BOARD AND REST CKT
5	DSP POWER AND RS232 IF	DSP POWER PART AND RS232 INTERFACE
6	DSP MEMORY IF & JTAG	DDR-2, FLASH INTERFACE TO THE DSP & JTAG CIRCUITARY
7	DSP PHERIPHERALS & VIDO DAC	DSP PHERIPHERALS & VIDO DAC CIRCUITARY
8	DDR-2 & FLASH	DDR-2 & FLASH DEVICES FOR DSP
9	VIDEO DIGITAL DECODER	VIDEO DIGITAL DECODER CIRCUITARY
10	AUDIO	AUDIO INTERFACE CIRCUITARY
11	ETHERNET	ETHERNET MII INTERFACE
12	EXPANSION CONNECTORS	EXPANSION CONNECTORS FOR PROVIDING EXTERNAL INTERFACE

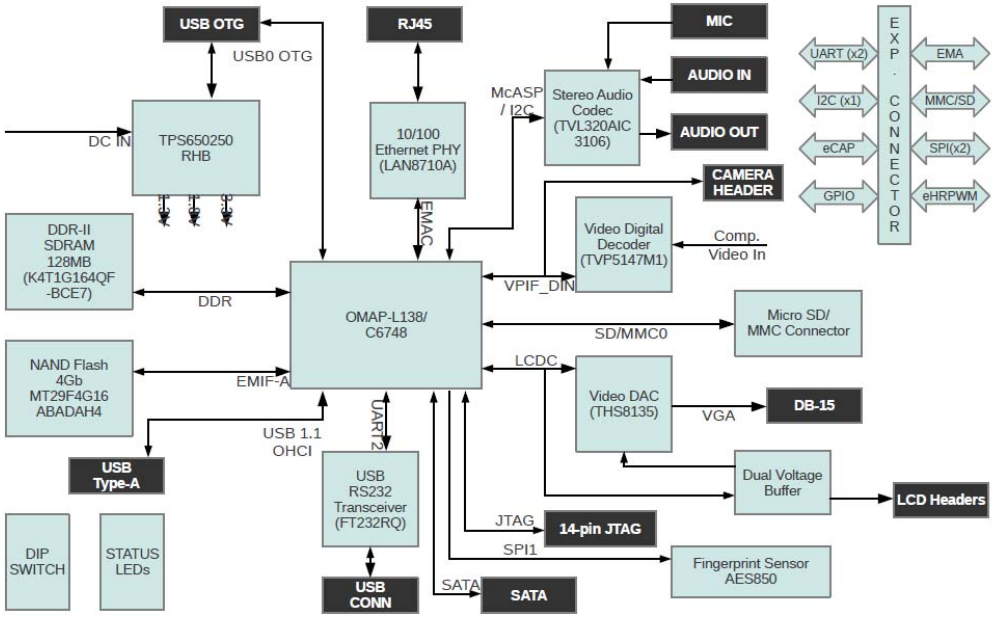

Texas Instruments, Inc.		
Title: OMAP-L138/C6748 LC Dev Kit		
Size: C	Document Number: <Doc>	Rev: A7E
Date: Monday, May 18, 2015	Sheet 3 of 12	

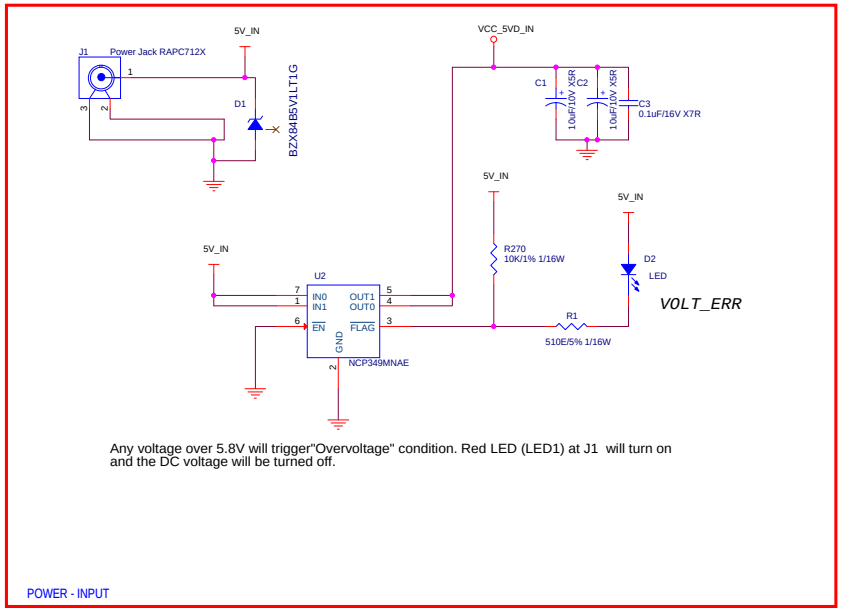

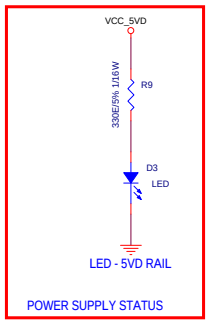

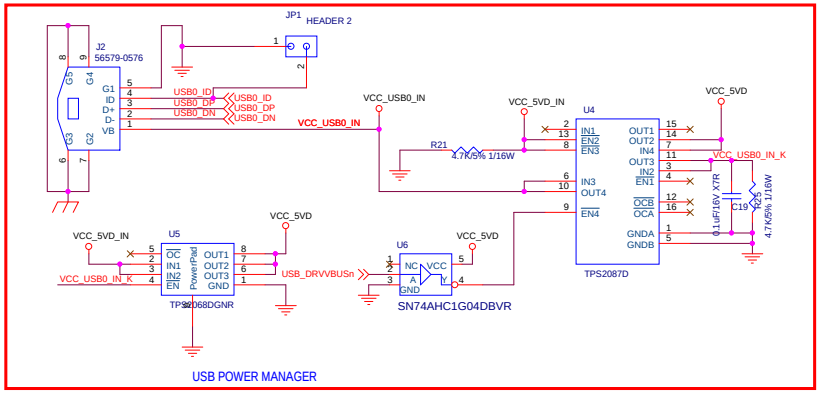

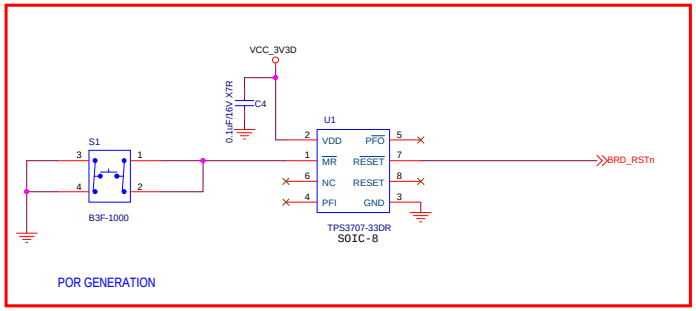

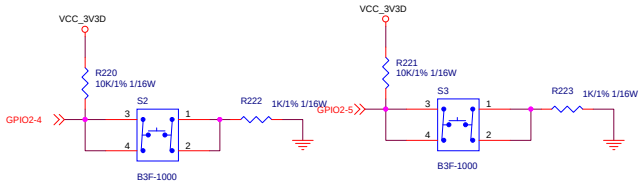

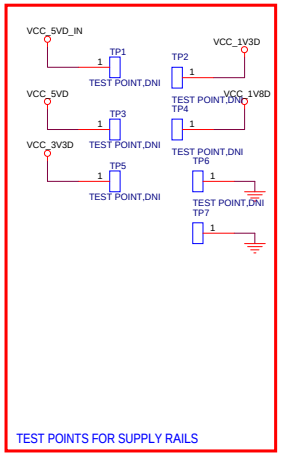

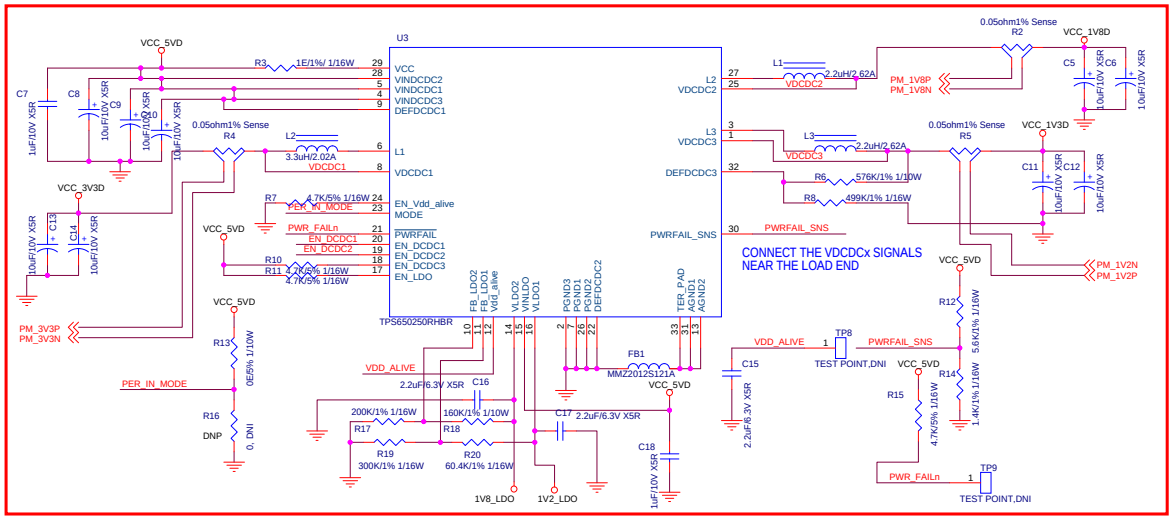

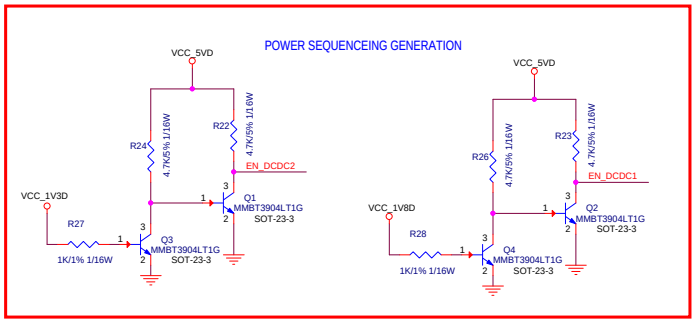

Texas Instruments, Inc.			
Title: OMAP-L138/C6748 LC Dev Kit			
Size: C	Document Number: <Doc>		Rev: A7E
Date: Monday, May 18, 2015		Sheet 4 of 12	

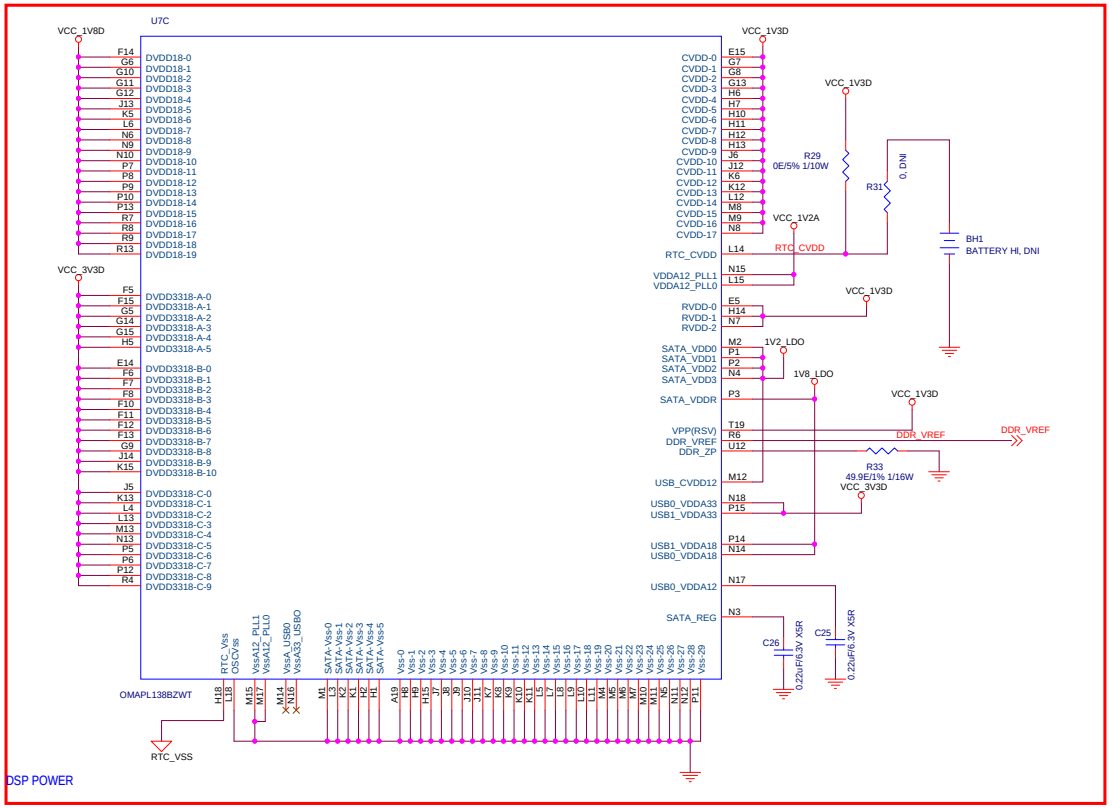

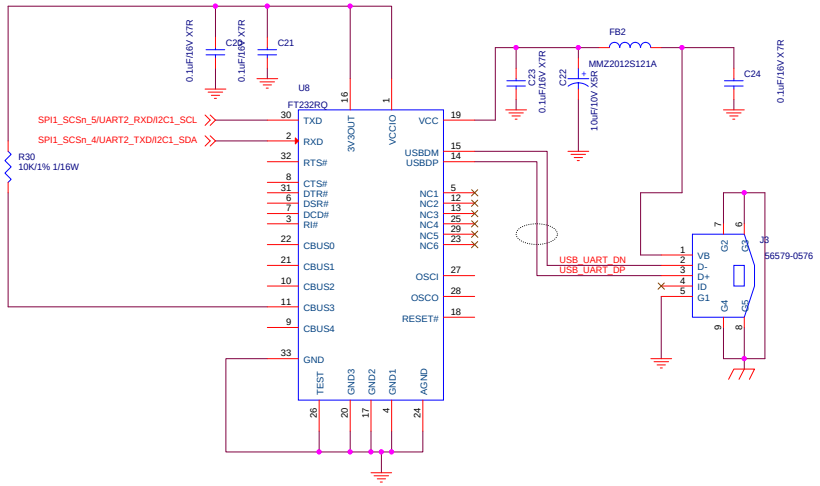

UART TRANCIEVER

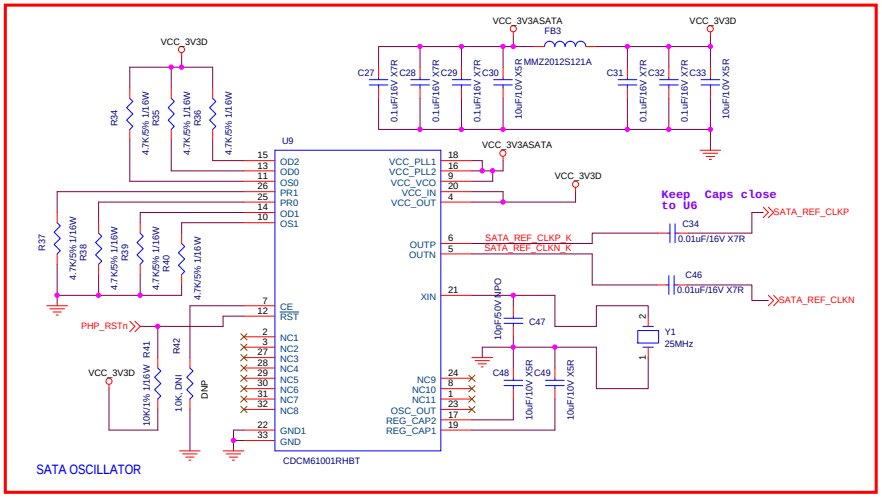

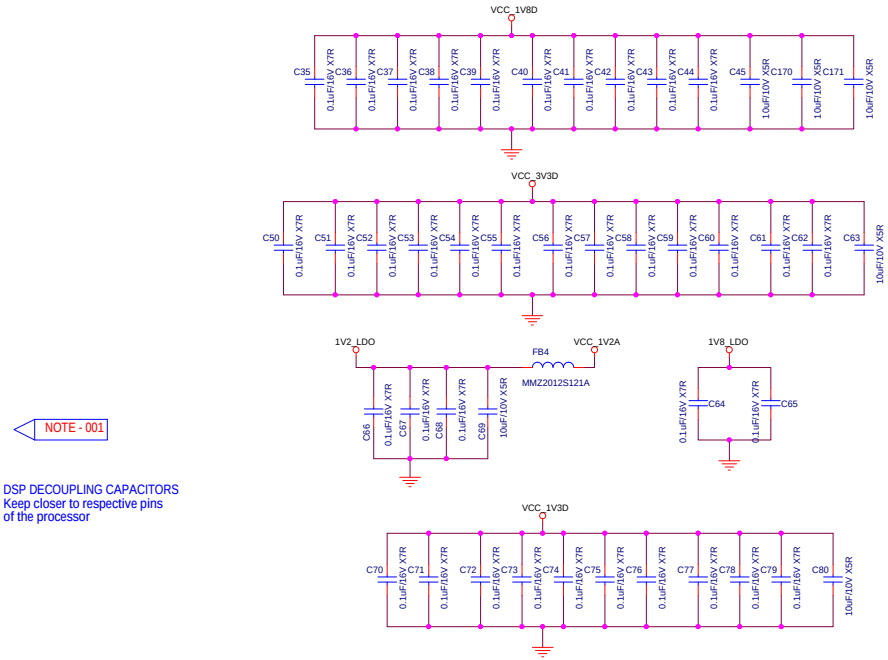

NOTE - 001

DSP DECOUPLING CAPACITORS
Keep closer to respective pins
of the processor

NOTE - 001 ALL DECAPS SHOULD BE PLACE WITHIN 1cm FROM EACH PIN

Texas Instruments, Inc.		
Title: OMAP-L138/C6748 LC Dev Kit		
Size: C	Document Number: <Doc>	Rev: A7E
Date: Monday, May 18, 2015	Sheet 5 of 12	

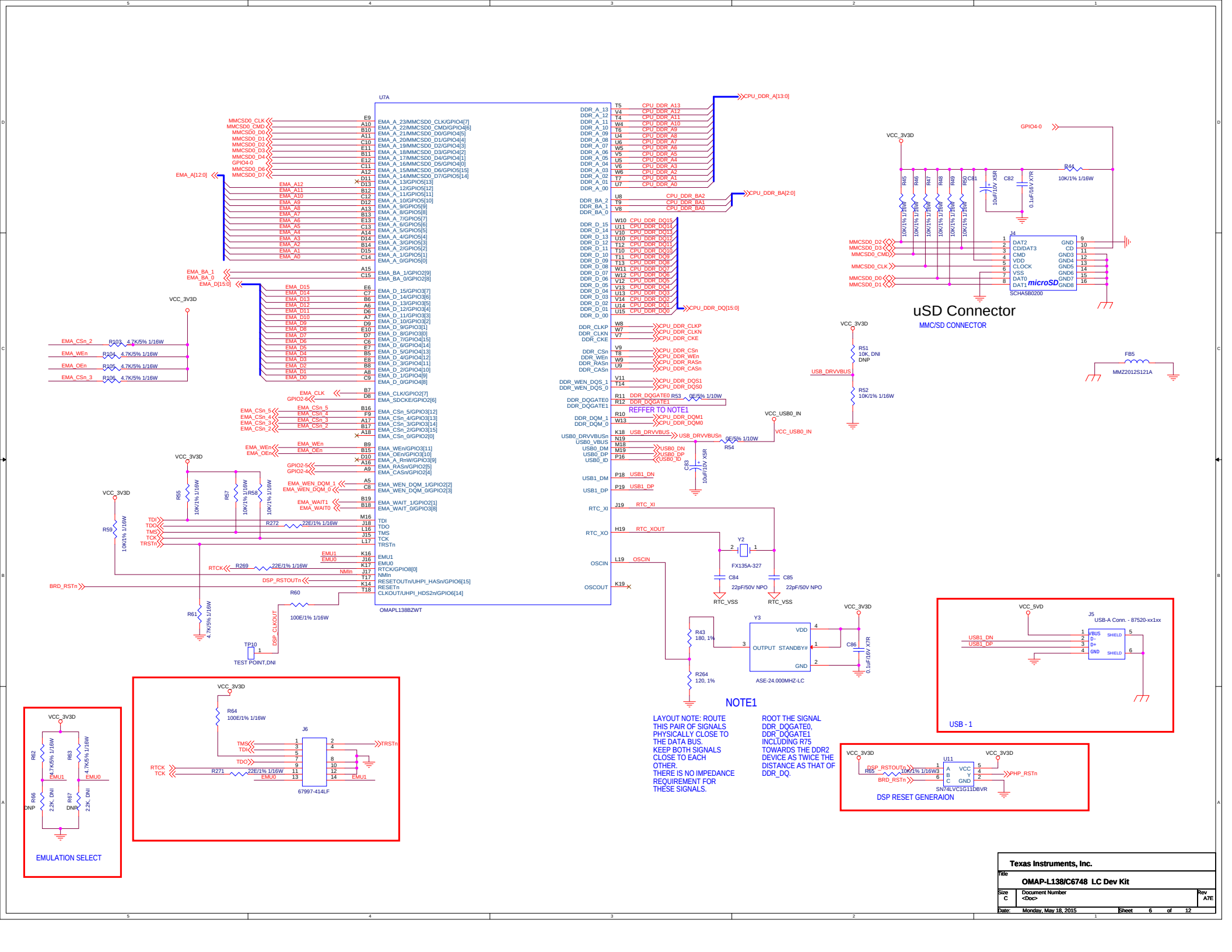
U7A
OMAPL138BZWT
uSD Connector
MMC/SD CONNECTOR
SCHA5B0200
NOTE1
LAYOUT NOTE: ROUTE THIS PAIR OF SIGNALS PHYSICALLY CLOSE TO THE DATA BUS. KEEP BOTH SIGNALS CLOSE TO EACH OTHER. THERE IS NO IMPEDANCE REQUIREMENT FOR THESE SIGNALS.
ROOT THE SIGNAL DDR_DQGATE0, DDR_DQGATE1 INCLUDING R75 TOWARDS THE DDR2 DEVICE AS TWICE THE DISTANCE AS THAT OF DDR_DQ.
REFFER TO NOTE1
EMULATION SELECT
USB - 1
DSP RESET GENERAION
TEST POINT,DNI
67997-414LF
ASE-24.000MHZ-LC
FX135A-327
SN74LVC1G11DBVR
Texas Instruments, Inc.
OMAP-L138/C6748 LC Dev Kit
Monday, May 18, 2015

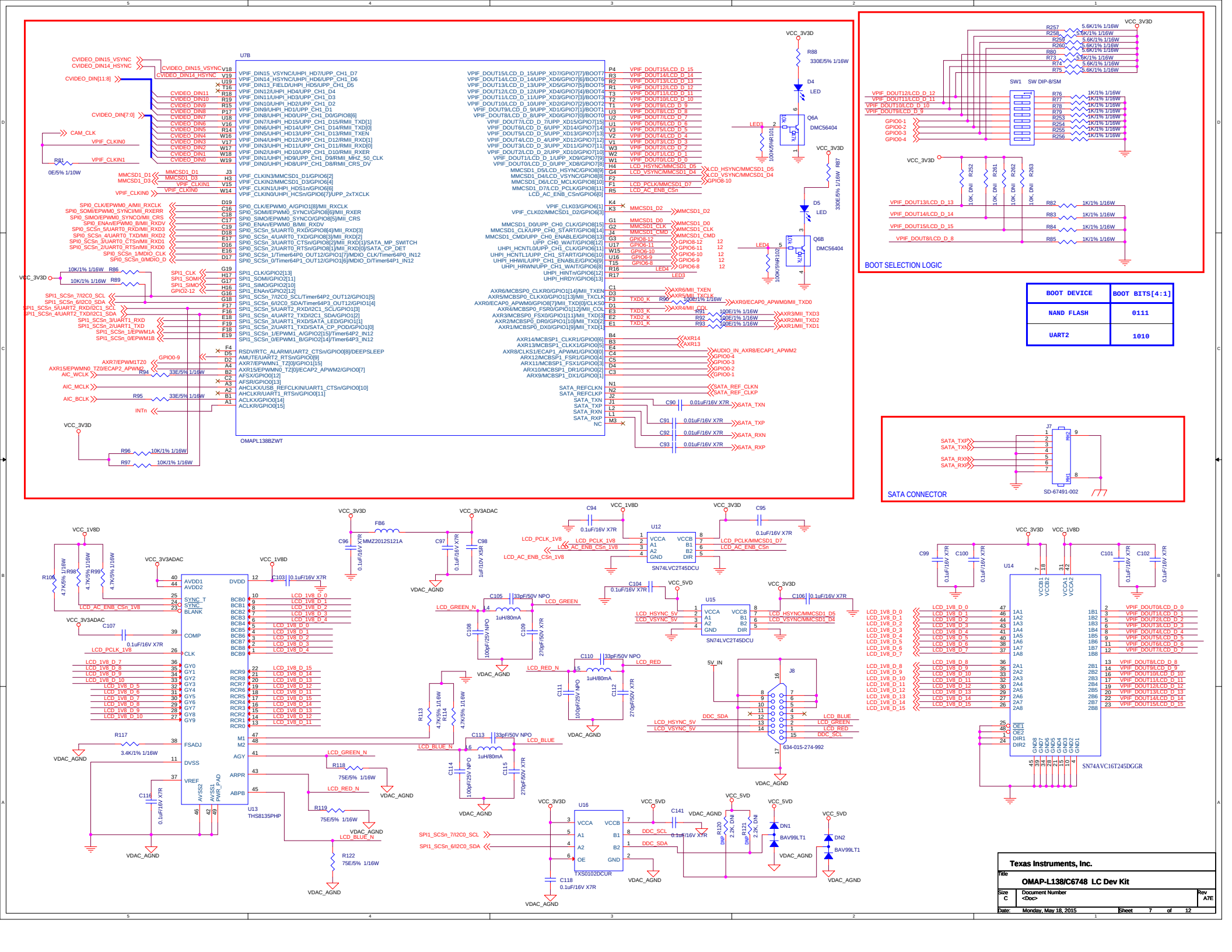

BOOT DEVICE	BOOT BITS[4:1]
NAND FLASH	0111
UART2	1010

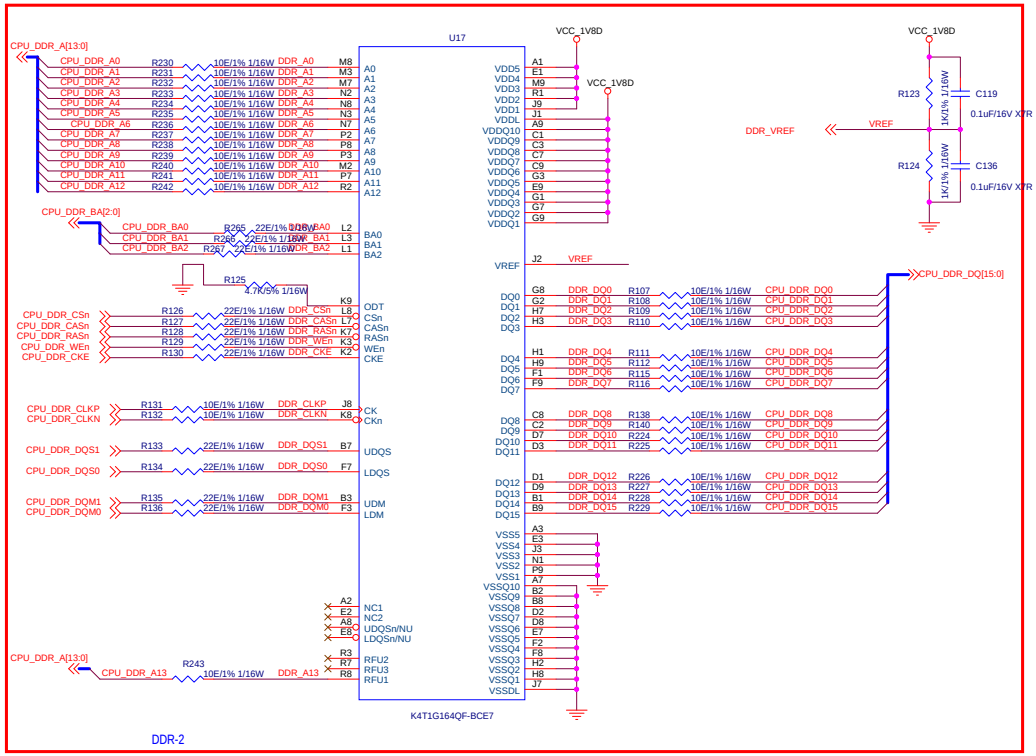

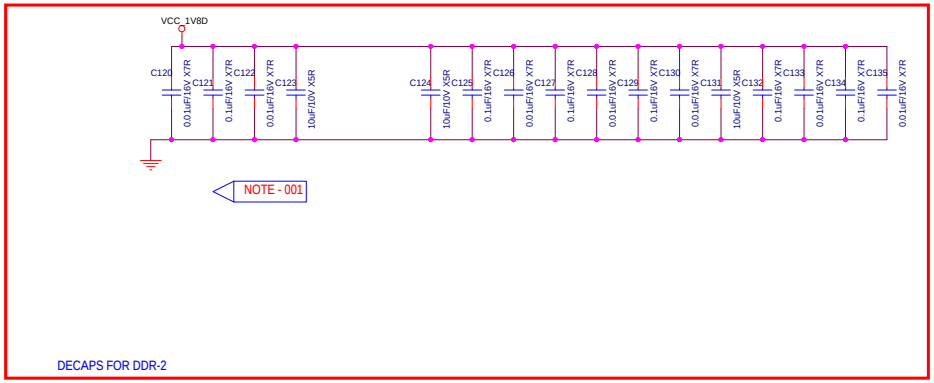

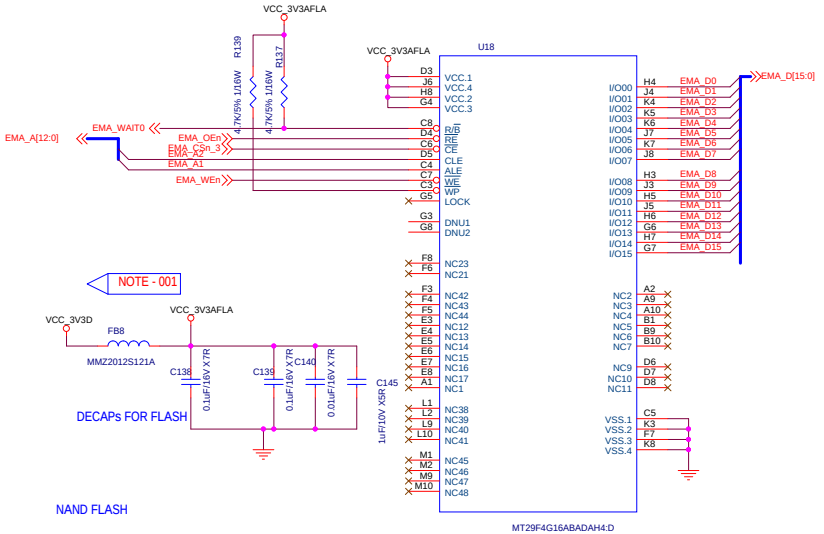

NOTE - 001 ALL DECAPS SHOULD BE PLACE WITHIN 1cm FROM EACH PIN

Texas Instruments, Inc.		
Title: OMAP-L138/C6748 LC Dev Kit		
Size: C	Document Number: <Doc>	Rev: A7E
Date: Monday, May 18, 2015	Sheet 8 of 12	

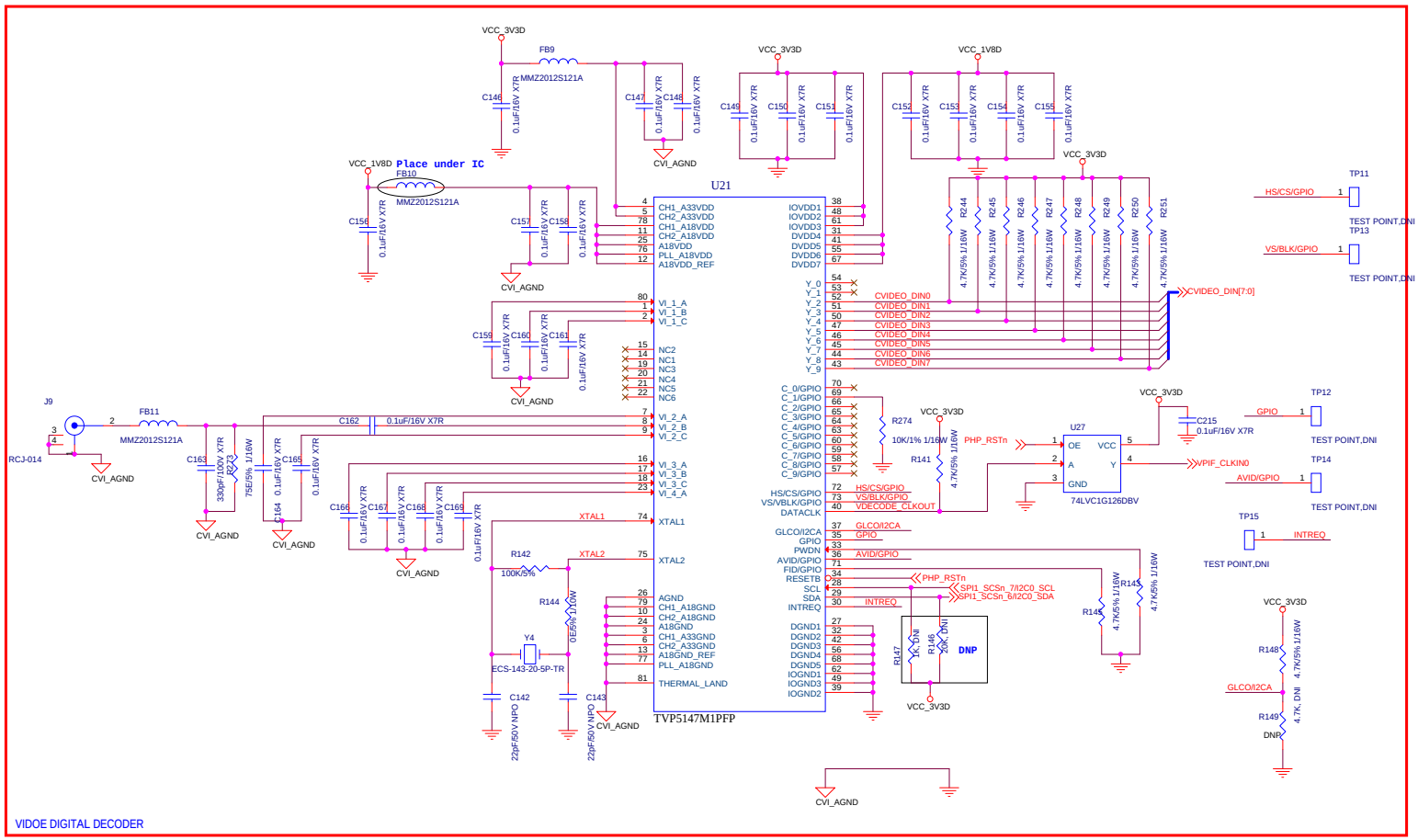

Texas Instruments, Inc.		
Title: OMAP-L138/C6748 LC Dev Kit		
Size: C	Document Number: <Doc>	Rev: A7E
Date: Monday, May 18, 2015	Sheet 9 of 12	

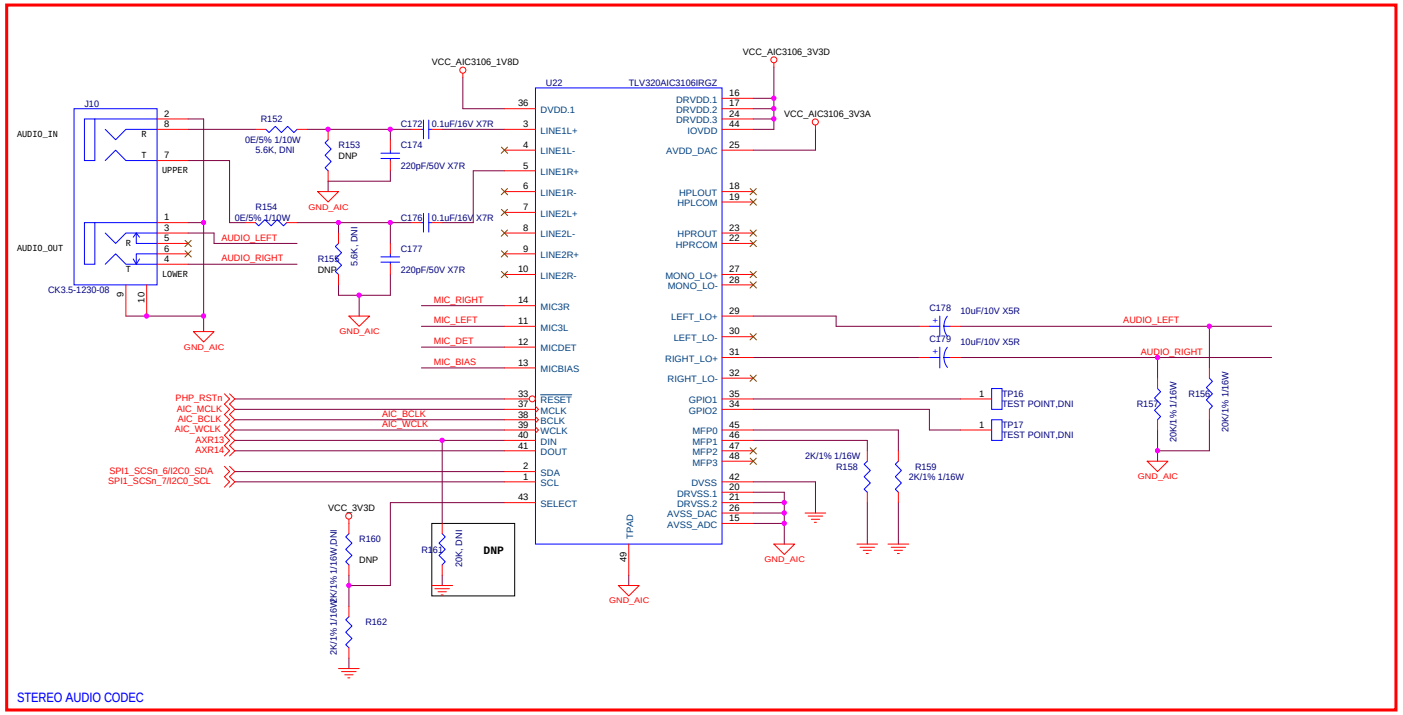

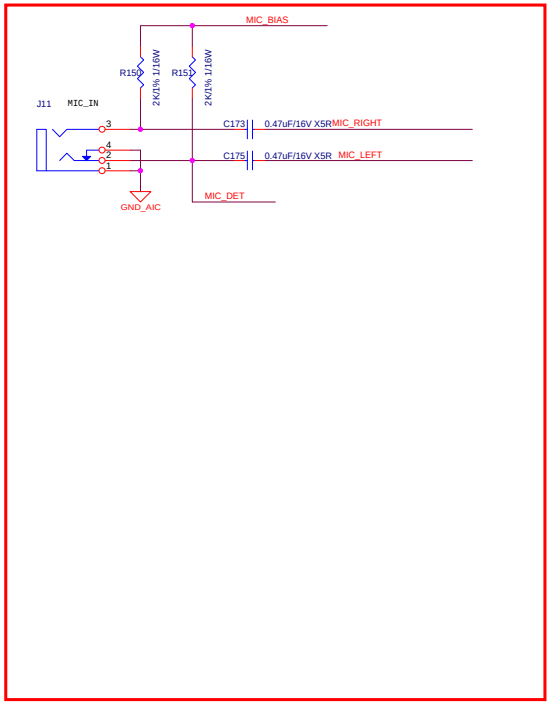

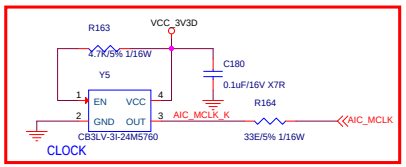

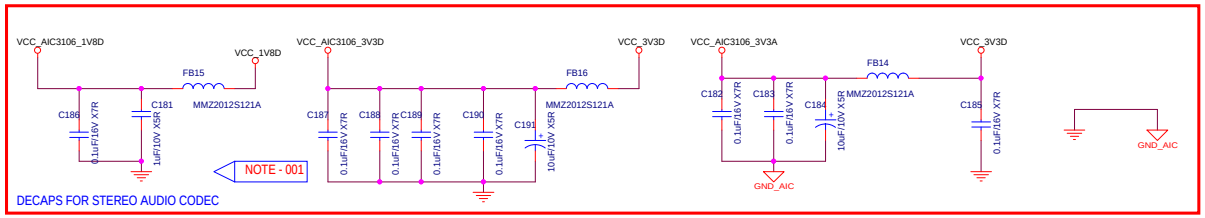

NOTE - 001 ALL DECAPS SHOULD BE PLACE WITHIN 1cm FROM EACH PIN

Texas Instruments, Inc.		
Title: OMAP-L138/C6748 LC Dev Kit		
Size: C	Document Number: <Doc>	Rev: A7E
Date: Monday, May 18, 2015	Sheet 10 of 12	

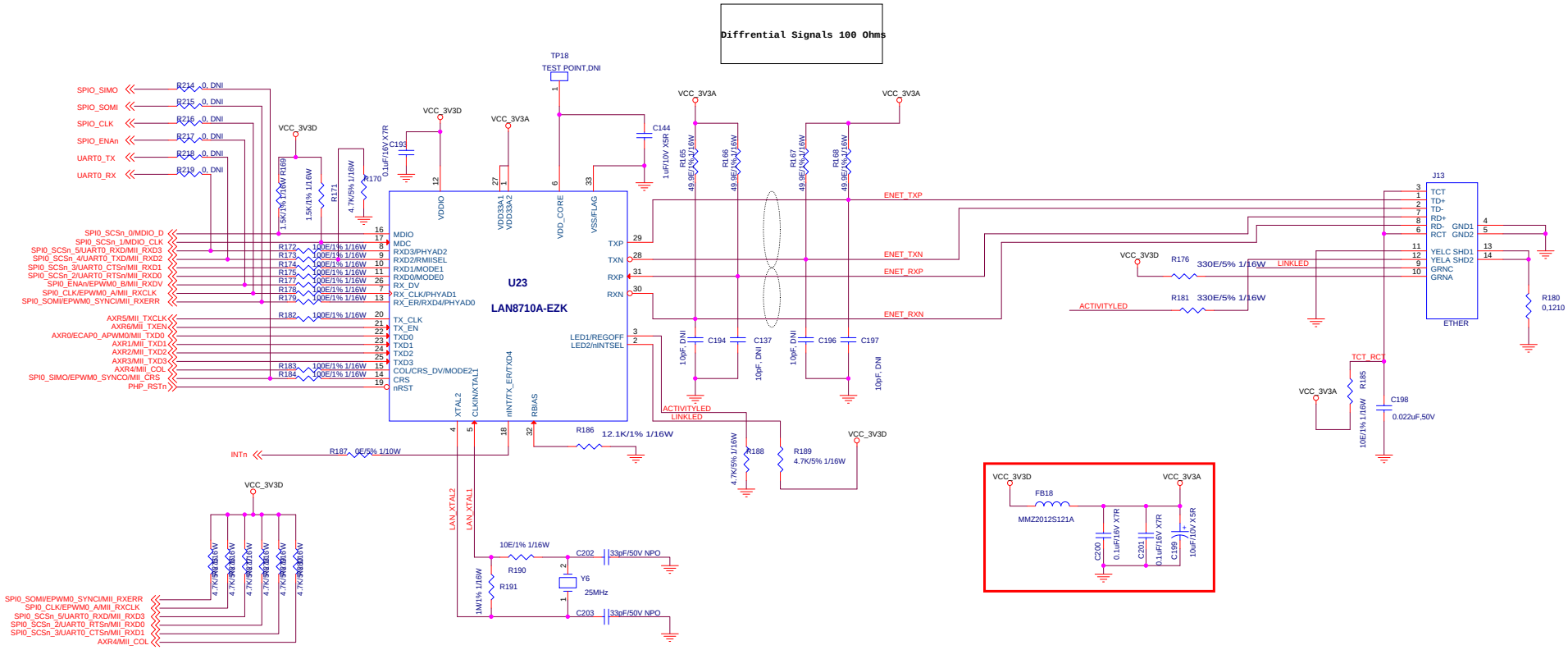

Texas Instruments, Inc.		
Title	OMAP-L138/C6748 LC Dev Kit	
Size C	Document Number <Doc>	Rev A7E
Date: Monday, May 18, 2015	Sheet 11 of 12	

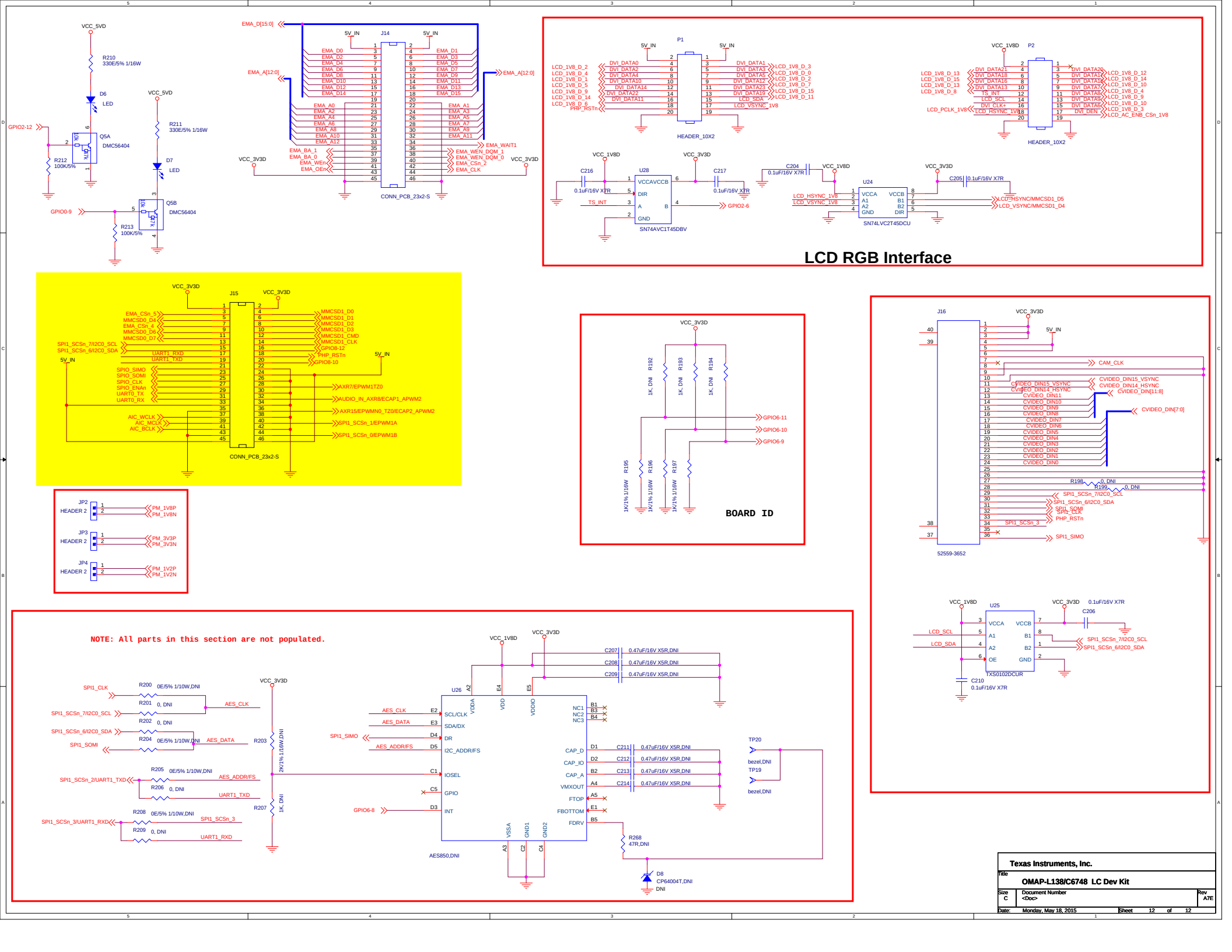
LCD RGB Interface
BOARD ID
NOTE: All parts in this section are not populated.
Texas Instruments, Inc.
OMAP-L138/C6748 LC Dev Kit
Size C
Document Number <Doc>
Rev A7E
Date: Monday, May 18, 2015
Sheet 12 of 12