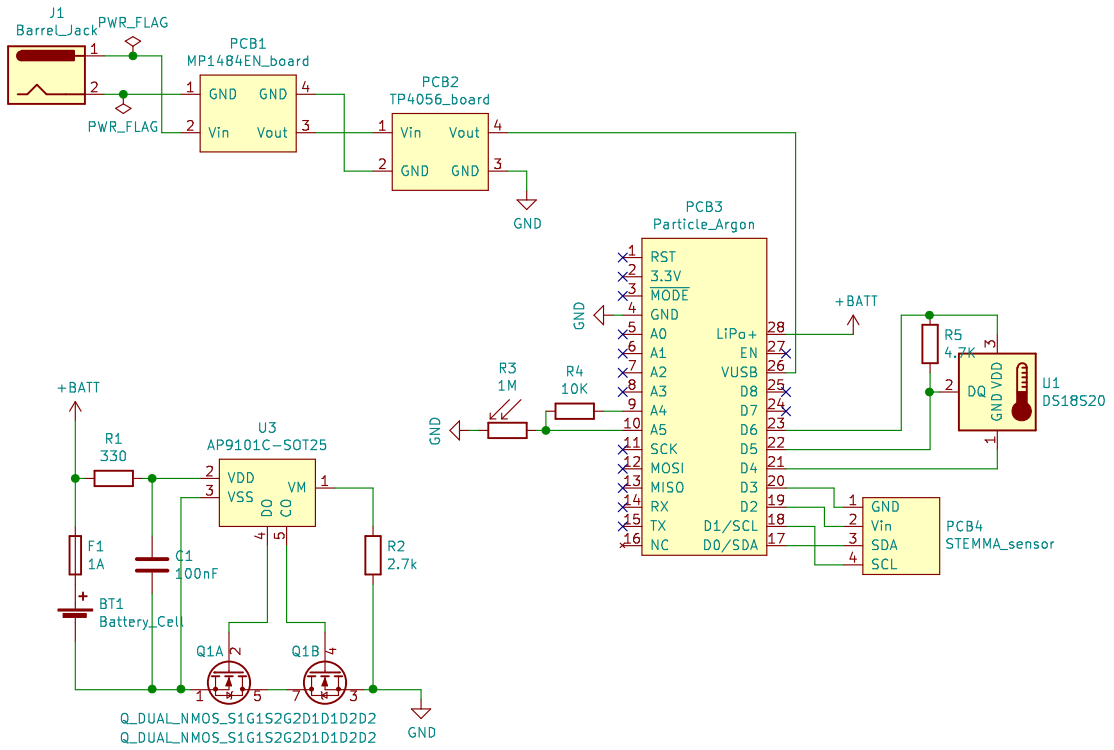

IPRO 497-506 Spring 2019 Team 3

Sheet: /
File: IoT IPRO (plant pot).sch

Title: Potnia PCB

Size: A4	Date: 2019-03-04	Rev: v0
KiCad E.D.A. kicad 5.0.0+dfsg1-2		Id: 1/1