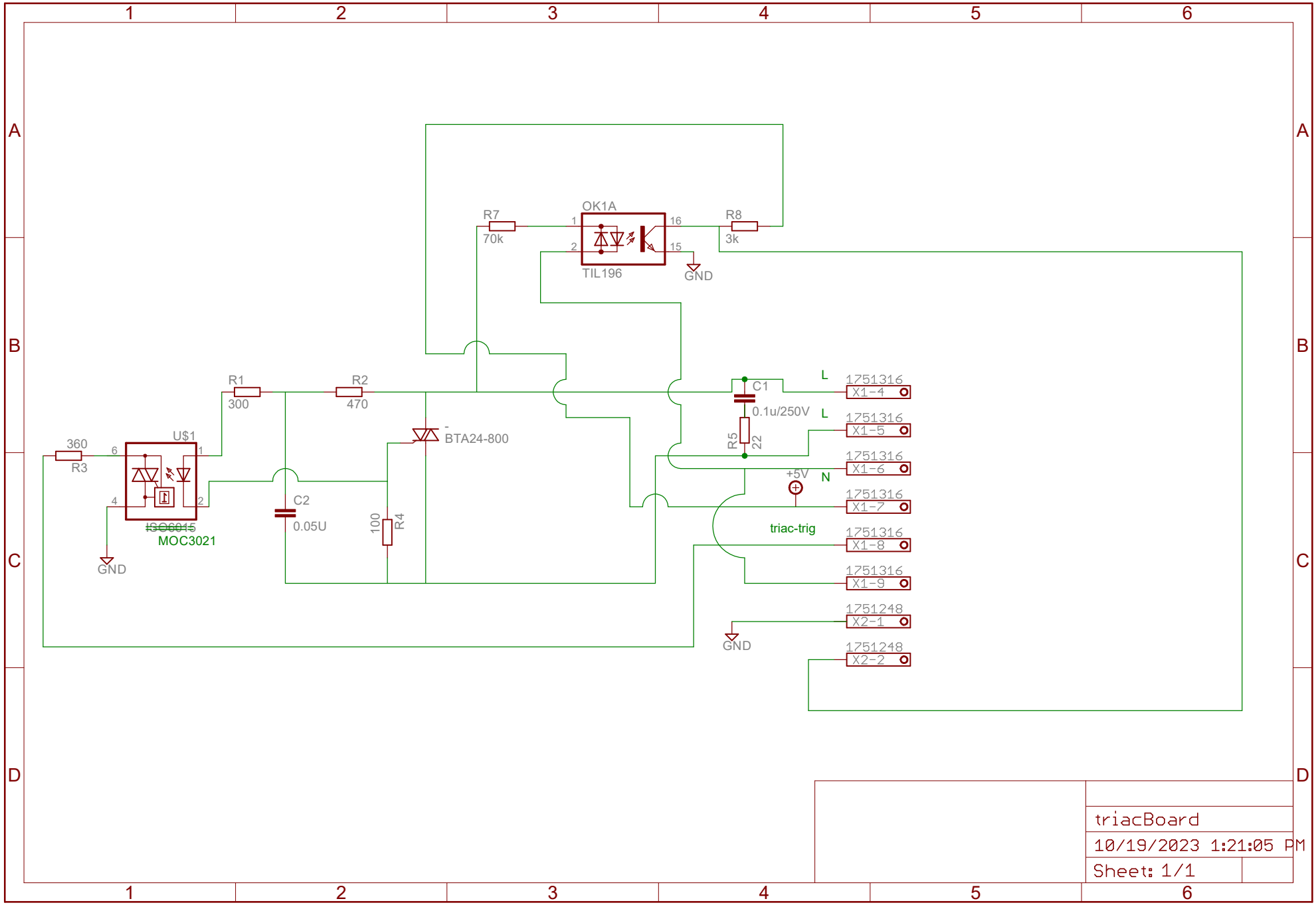
R7
70k
OK1A
TIL196
R8
3k
GND
R1
300
R2
470
BTA24-800
C1
0.1u/250V
R5
22
L
L
N
+5V
triac-trig
1751316
X1-4
1751316
X1-5
1751316
X1-6
1751316
X1-7
1751316
X1-8
1751316
X1-9
1751248
X2-1
1751248
X2-2
GND
360
R3
U$1
ISO6015
MOC3021
GND
C2
0.05U
100
R4
triacBoard
10/19/2023 1:21:05 PM
Sheet: 1/1