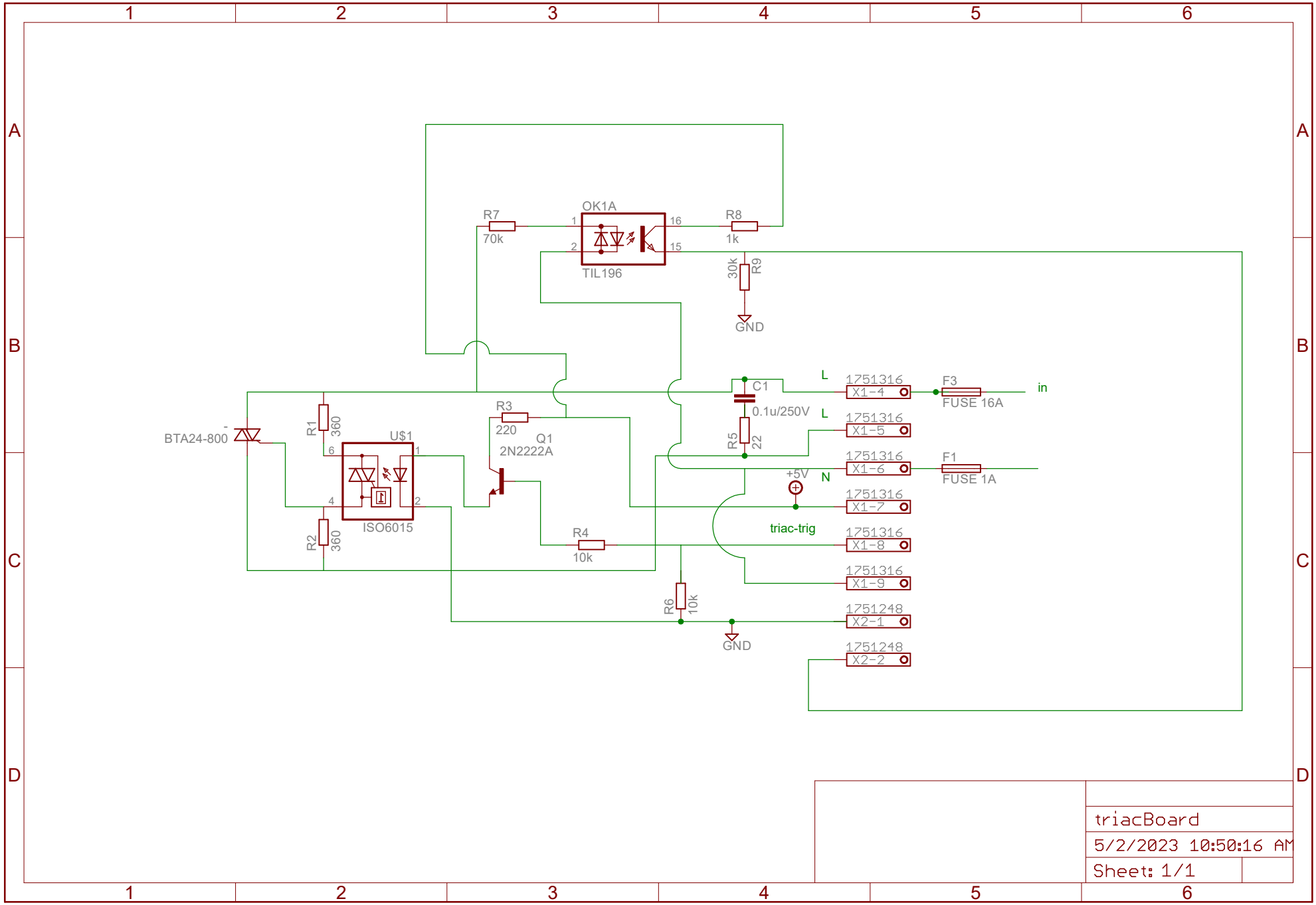
OK1A
TIL196
R7
70k
R8
1k
R9
30k
GND
C1
0.1u/250V
R5
22
L
N
1751316
X1-4
X1-5
X1-6
X1-7
X1-8
X1-9
1751248
X2-1
X2-2
F3
FUSE 16A
in
F1
FUSE 1A
+5V
triac-trig
BTA24-800
R1
360
R2
360
U$1
ISO6015
R3
220
Q1
2N2222A
R4
10k
R6
10k
GND
triacBoard
5/2/2023 10:50:16 AM
Sheet: 1/1