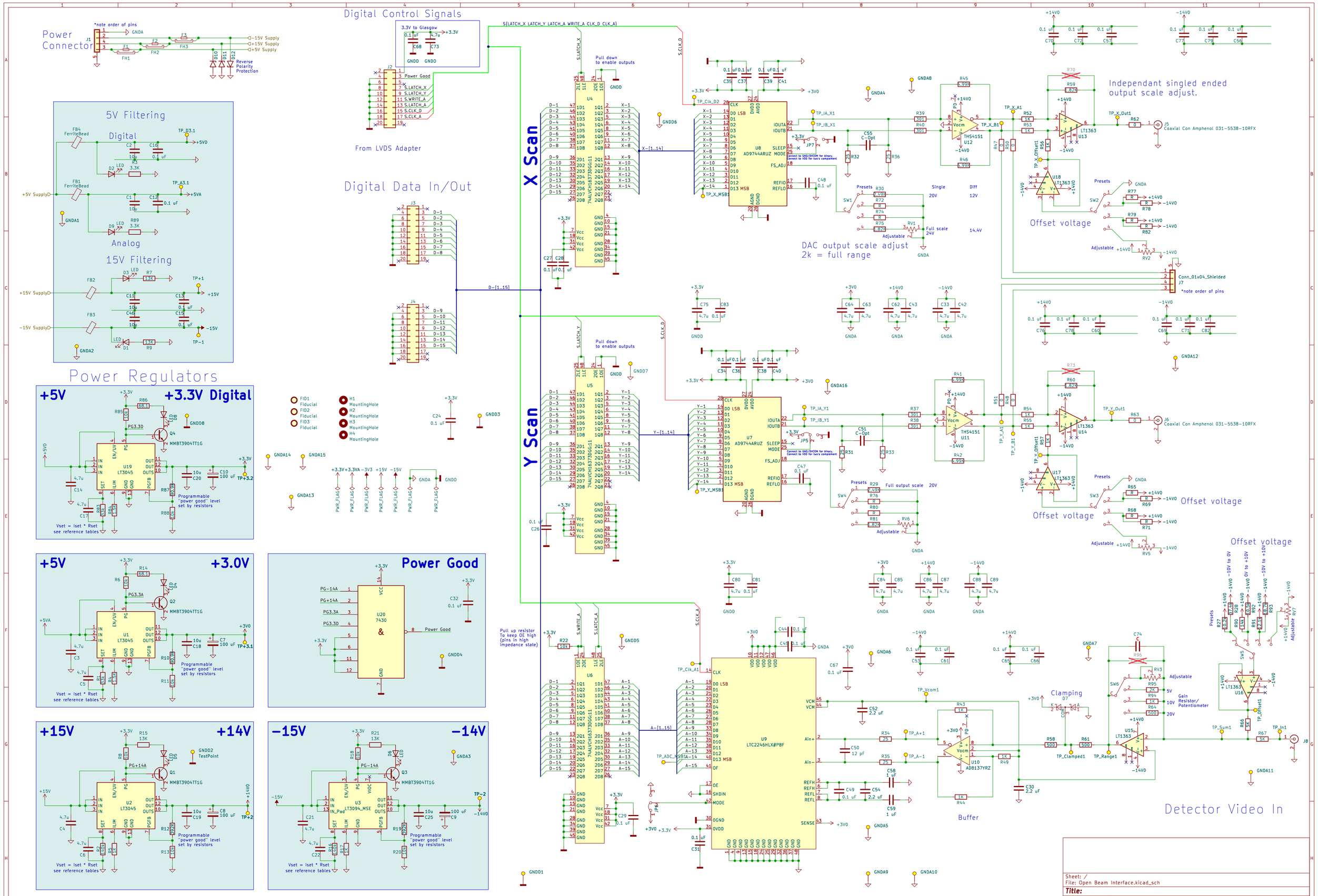
Power Connector
*note order of pins
GNDA
−15V Supply
+15V Supply
+5V Supply
Reverse Polarity Protection
Digital Control Signals
3.3V to Glasgow
Power Good
S.LATCH_X
S.LATCH_Y
S.WRITE_A
S.LATCH_A
S.CLK_A
From LVDS Adapter
Pull down to enable outputs
X Scan
Y Scan
Digital Data In/Out
5V Filtering
Digital
Analog
15V Filtering
Power Regulators
+5V
+3.3V Digital
+3.0V
+15V
+14V
−15V
−14V
Programmable "power good" level set by resistors
Vset = Iset * Rset see reference tables
Power Good
Independant singled ended output scale adjust.
Coaxial Con Amphenol 031-5538-10RFX
Offset voltage
DAC output scale adjust 2k = full range
Full scale 24V
Full output scale 20V
Clamping
Buffer
Gain Resistor/ Potentiometer
Detector Video In
Sheet: /
File: Open Beam Interface.kicad_sch
Title:
Size: A2
Date:
Rev:
KiCad E.D.A. kicad 7.0.2-0
Id: 1/1