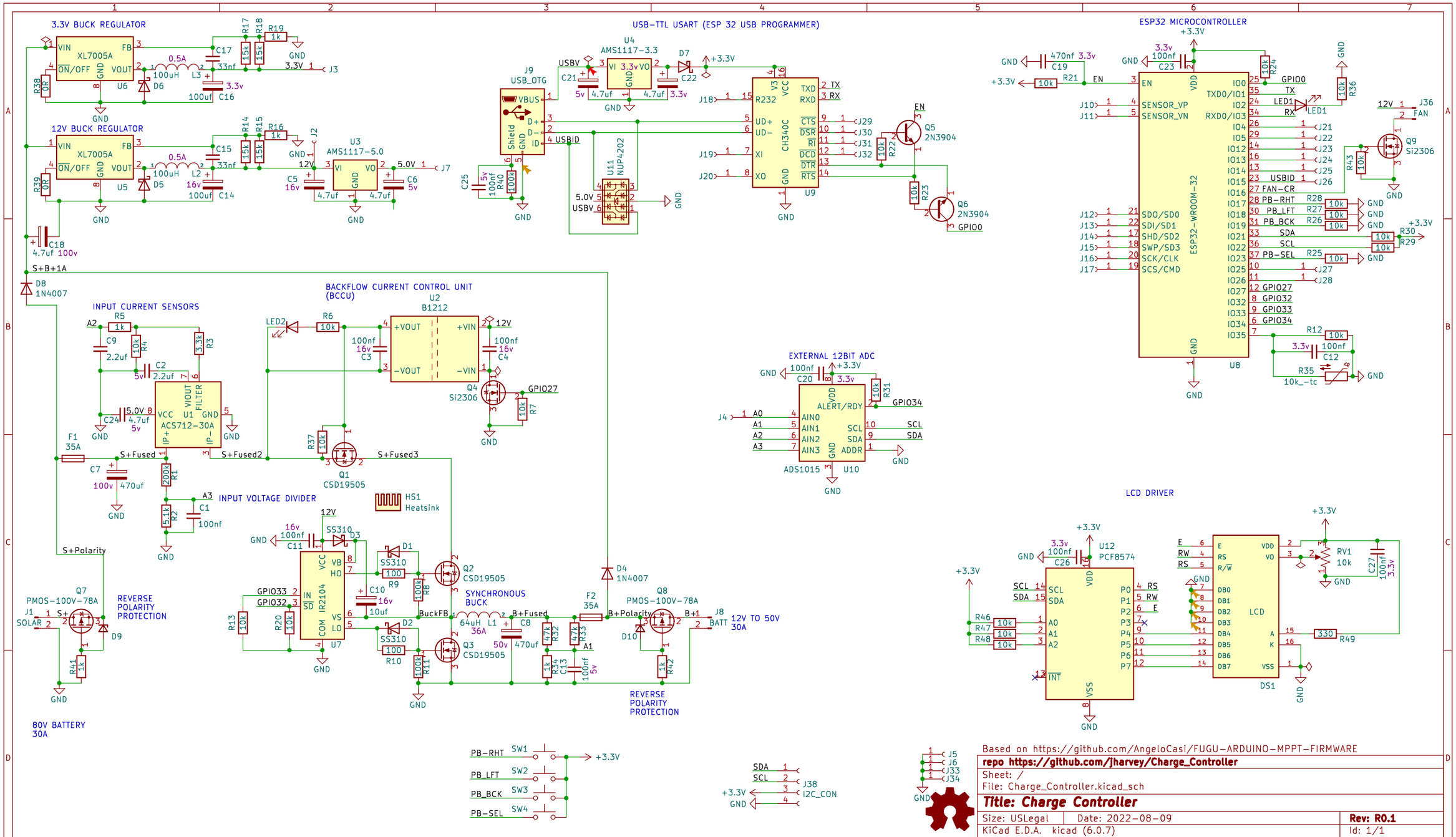
3.3V BUCK REGULATOR
12V BUCK REGULATOR
USB-TTL USART (ESP 32 USB PROGRAMMER)
ESP32 MICROCONTROLLER
INPUT CURRENT SENSORS
BACKFLOW CURRENT CONTROL UNIT (BCCU)
INPUT VOLTAGE DIVIDER
EXTERNAL 12BIT ADC
LCD DRIVER
SYNCHRONOUS BUCK
REVERSE POLARITY PROTECTION
80V BATTERY 30A
12V TO 50V 30A
Based on https://github.com/AngeloCasi/FUGU-ARDUINO-MPPT-FIRMWARE
repo https://github.com/jharvey/Charge_Controller
Sheet: /
File: Charge_Controller.kicad_sch
Title: Charge Controller
Size: USLegal
Date: 2022-08-09
Rev: R0.1
KiCad E.D.A. kicad (6.0.7)
Id: 1/1