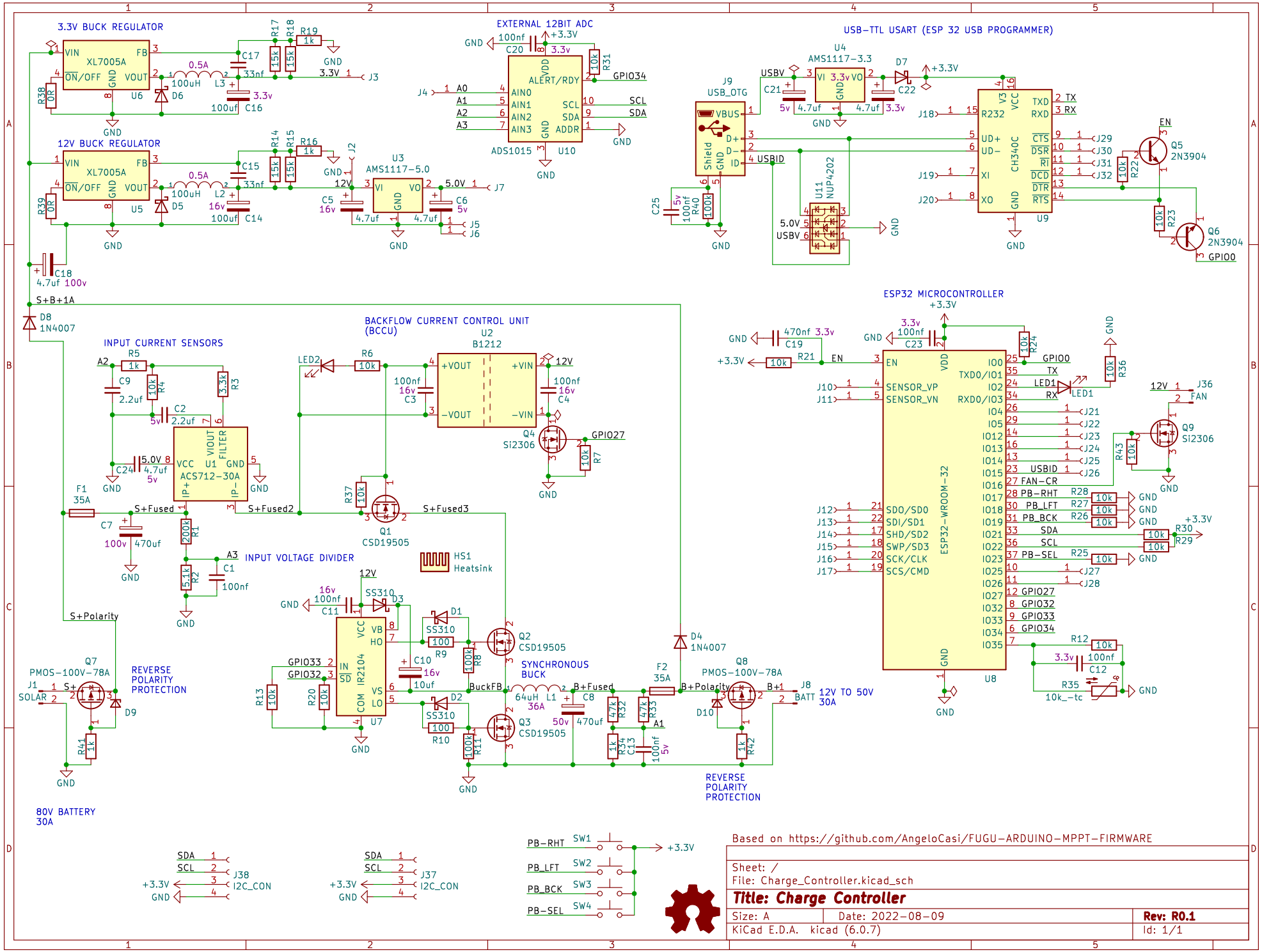
3.3V BUCK REGULATOR
XL7005A
12V BUCK REGULATOR
XL7005A
EXTERNAL 12BIT ADC
ADS1015
AMS1117-5.0
USB-TTL USART (ESP 32 USB PROGRAMMER)
AMS1117-3.3
USB_OTG
NUP4202
CH340C
ESP32 MICROCONTROLLER
ESP32-WROOM-32
BACKFLOW CURRENT CONTROL UNIT (BCCU)
B1212
INPUT CURRENT SENSORS
ACS712-30A
INPUT VOLTAGE DIVIDER
IR2104
SYNCHRONOUS BUCK
REVERSE POLARITY PROTECTION
PMOS-100V-78A
12V TO 50V 30A
80V BATTERY 30A
Heatsink
Based on https://github.com/AngeloCasi/FUGU-ARDUINO-MPPT-FIRMWARE
Sheet: /
File: Charge_Controller.kicad_sch
Title: Charge Controller
Size: A
Date: 2022-08-09
Rev: R0.1
KiCad E.D.A. kicad (6.0.7)
Id: 1/1