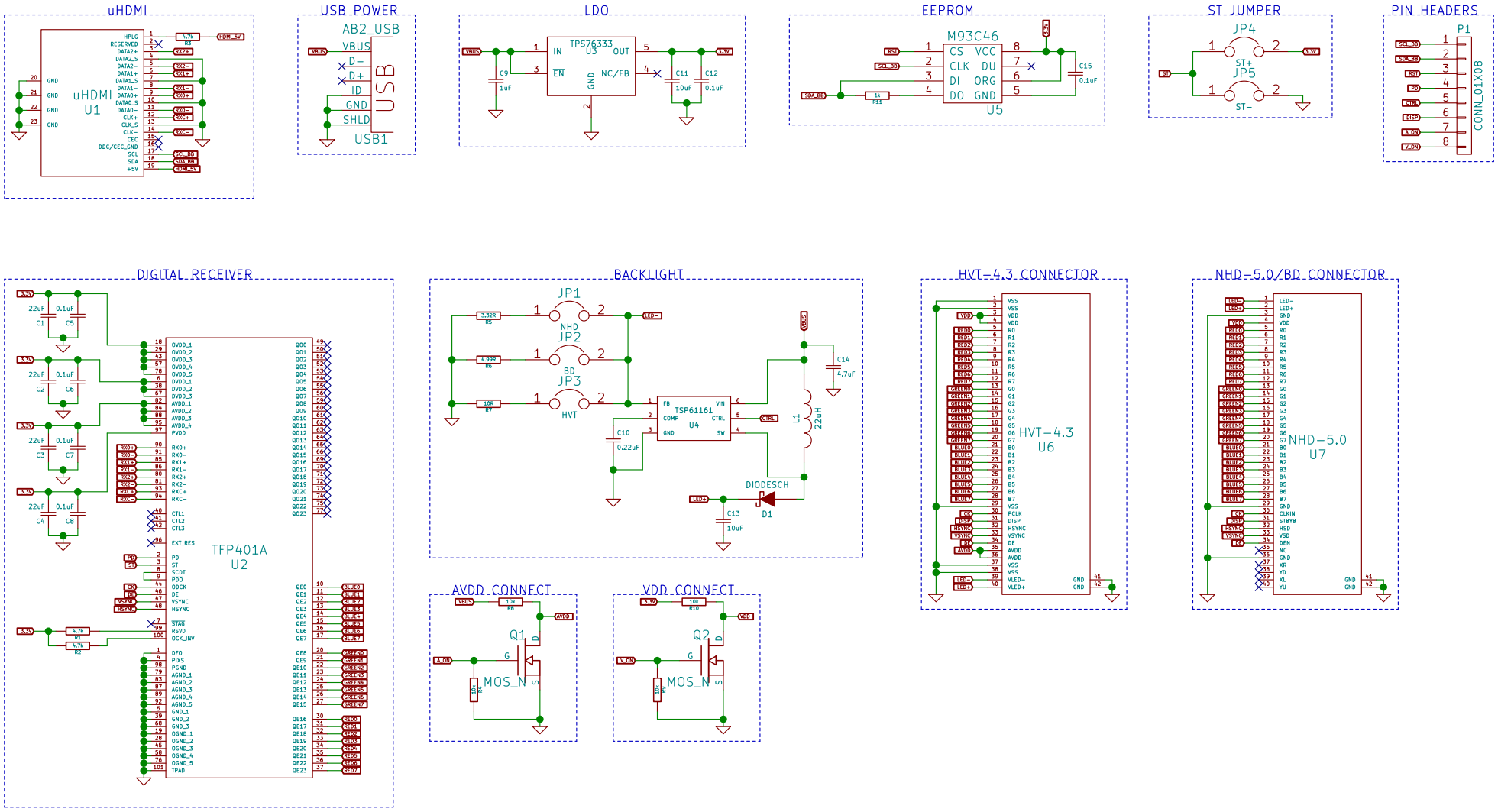

HDMI to TFT screen converter using TFP401A

SurveyCorps

Sheet: /

File: screen.sch

Title: Portal

Size: A4	Date: Tue 07 Oct 2014	**Rev: A**
KiCad E.D.A. kicad (2014-09-29 BZR 5155)-product		Id: 1/1