Results in Control and Optimization 4 (2021) 100032

Contents lists available at ScienceDirect

Results in Control and Optimization

journal homepage: www.elsevier.com/locate/rico

Adaptive fractional order PID controller tuning for brushless DC motor using Artificial Bee Colony algorithm

K. Vanchinathan [a], N. Selvaganesan [b,*]

[a] Department of Electrical and Electronics Engineering, Velalar College of Engineering and Technology, Erode 638012, Tamilnadu, India
[b] Department of Avionics, Indian Institute of Space Science and Technology, Thiruvananthapuram 695547, Kerala, India

ARTICLE INFO

Keywords:
Self-tuning regulator
Fractional-order PID controller
Artificial Bee Colony
Brushless DC motor

ABSTRACT

This paper presents an adaptive Fractional Order PID (FOPID) controller for improving the performance of a Brushless DC (BLDC) motor using Artificial Bee Colony (ABC) algorithm. BLDC motor is desired to operate at various speed and load conditions with enhanced performance and robust speed control. In practice, the effect of longer settling time, fluctuation of steady-state error, power fluctuation and nonlinearity characteristics of the BLDC motor drive result in poor controllability. To overcome the problems, an optimized FOPID controller using the ABC algorithm in a self-tuned regulator structure is proposed to minimize the given objective function to satisfy the inequality constraints. It is also interesting to note that the usage of Hall Effect sensors has many limitations due to the failure of its components, poor reliability, need special mechanical arrangements for mounting and electrical noise aspects. In order to avoid such issues, a Kalman Filter is designed for estimating the speed of the motor. The simulation is carried out for the proposed ABC tuned FOPID controller and the results are compared with conventional genetic algorithm and modified genetic algorithm tuned FOPID controllers. The results indicate that the proposed ABC tuned controller is superior in terms of time-domain characteristics, control effort, and specified performance indices. Further to show the usefulness of the proposed method, an experimental model is developed and validated for the selected operating conditions with the required comparison.

1. Introduction

Electrical energy is the most important secondary source of energy in the 21st century and electrical machines play a vital role in areas such as industrial, commercial sectors, and household electrical appliances [1]. The statistics given by the Electric Power Research Institute show that 51% of electric energy is utilized by motors whereas the electric energy consumed by other sectors is comparatively lower [2]. It is clearly indicated that the importance of an efficient and robust controller for motor control leads to efficient energy utilization [3]. A considerable amount of electrical energy can be saved by the selection of Variable Speed Drives (VSD) since it is improving the system efficiency by 15% to 27% compared to constant speed drive motors [4] and hence VSD is the only choice for automation and production.

The BLDC motor has several aspects of unique benefits like enhanced performance such as excellent speed versus torque characteristics, good static and dynamic characteristics, better efficiency, higher speed ranges up to 10,000 rpm, long working life, noiseless operation, and upgraded control ability over a conventional brushed motor [5,6]. The control of BLDC motor has become simple and very effective for a wide range of operating speed by maintaining great proficiency. To achieve the robust speed control of BLDC motor, Fractional Order Proportional Integral Derivative (FOPID) controller is introduced [7].

* Corresponding author.
E-mail address: n_selvag@iist.ac.in (N. Selvaganesan).

https://doi.org/10.1016/j.rico.2021.100032
Received 3 February 2021; Received in revised form 27 April 2021; Accepted 21 June 2021
Available online 29 June 2021
2666-7207/© 2021 The Author(s). Published by Elsevier B.V. This is an open access article under the CC BY-NC-ND license (http://creativecommons.org/licenses/by-nc-nd/4.0/).

Fractional calculus is a generalization of conventional integer-order calculus to any order. In control systems, fractional calculus finds an applications in either modeling of complex systems or design of controller. The transfer function structure of fractional-order controller has compact irrational form which can meet stringent closed loop design specifications. Studies [8–13] have shown that being the superclass of their integer counterparts, fractional controllers always perform better, e.g., fractional PID is better than integer PID.

Most of the industrial research uses the FOPID controller for robust control of the system [14] in place of the existing PID controller. The FOPID controller is based on fractional calculus, which is established and reported [15]. A typical FOPID controller consists of five parameters (K_p, K_i, K_d, λ, and μ) which are complex for tuning, and hence optimization methods are needed to obtain the optimal solution. Tuning of FOPID controller to meet the given error indices such as Integral Square Error (ISE), Integral Absolute Error (IAE), and Integral Time Absolute Error (ITAE) are also gaining attention for researchers working in the area of fractional order control. This problem is an unconstrained, large-dimensional, and multivariable optimization problem, which is difficult to solve analytically.

In literature, authors [16] presented the work related to the FOPID controller for various applications, and the robust performance of FOPID along with Integer Order PID (IOPID) controllers used for electrical machines is discussed [17]. The consequences show that the FOPID controller gives a robust performance and better stability than the IOPID controller. However, the controller does not produce good performance characteristics when the motor operates under varying load conditions. Hence, an optimization technique is required for optimal tuning of FOPID controller. The details about conventional speed control methods, sensorless techniques with the FOPID controller, and optimization techniques of BLDC motor are presented [18]. To enhance the performance further, the sensorless speed control of BLDC motor using an intelligent method for optimized FOPID controller is presented [19].

In authors [20] proposed an approach for robust evaluation of the FOPID controller used in a DC motor which shows poor speed response features such as rise time, peak time, and settling time. Researchers have proposed a new approach to the tuning of fractional order PI/ PD controllers [21]. These controllers provide a sluggish response and poor robustness. The tuning method of the FOPID controller using a step command signal is presented [22]. The tuning of the controller is performed only with phase margin and crossover frequency and hence poor robustness. The ABC optimized FOPID controller is developed [23] for reducing the error indices such as ISE, IAE, and ITAE for a specific class of plant.

On the other hand, Self-Tuning Regulator (STR) is one of the most appropriate adaptive control methods for BLDC motor drives [24]. In general, an adaptive controller in electric drive applications can be defined as a controller with adjustable parameters and control devices for regulating the controller parameters to attain the desired speed conditions. Hence, it has the potential to develop STR based adaptive FOPID controllers for sensorless speed control of BLDC motor in order to achieve good time domain performances and excellent robustness with more flexibility.

Conventional Genetic Algorithm (CGA) is an effective, flexible, and optimal search method used in complex optimization problems [25]. In CGA, the finest chromosomes are not constantly growing in every generation. The obtained optimal solutions can be demolished by either crossover or mutation. To eliminate this problem, the Modified Genetic Algorithm (MGA) is proposed [26] for optimal tuning of the IOPID controller to minimize the transient characteristics. The MGA is a powerful and fastest search engine optimization strategy to identify the optimal parameters of the FOPID controller [27,28].

Artificial Bee Colony (ABC) is one of the methods that has been utilized in finding an optimal solution for complex problems [29]. ABC algorithm is simulated by utilizing the behavior of honey bees while searching for an excellent food source. This method is a simple, rapid, and population-based stochastic search method which is inspired by the searching behavior of honey bees [30]. The ABC based PID/FOPID speed controllers for DC motor drive is proposed [31]. However, this method introduces a larger overshoot and more oscillations in the speed response characteristics. Hybrid bacterial foraging and particle swarm optimization algorithms for tuning of the PID controller for a BLDC motor is presented [32].

The PSO and ABC algorithms are used for tuning of IOPID and FOPID controller parameters to minimize the time domain performance metrics [33]. Simulation studies show that the ABC algorithm performs better for the second-order system with time delay. A preliminary investigation of metaheuristic algorithm based FOPID controllers for sensorless BLDC motor is presented [34,35]. These methods lead to larger settling time, steady state error, and introduces instability under some load conditions.

This motivates us to explore the various intelligent methods of tuning FOPID controllers for sensorless speed control of BLDC motor. In this research work, the application of the heuristic algorithms like CGA, MGA, and ABC are examined and it is focused towards (i) Real time application on speed control of brushless DC motor using ABC optimized FOPID controller and (ii) using the self-tuning regulator (STR) structure. The research contribution is summarized as follows:

- A constrained optimization problem is presented to update the FOPID controller using the ABC algorithm for sensorless speed control of BLDC in the self-tuning regulator structure. The proposed tuning method minimizes the time domain specifications in addition to the error indices such as IAE, ITAE, and ISE under varying load and set speed conditions.
- To avoid the speed sensors, a Kalman filter method is used for estimating the speed of the motor.
- A Simulink model of an ABC optimized FOPID controller for sensorless speed control of BLDC motor is developed.
- The detailed simulation is conducted for the proposed ABC tuned FOPID controller and the results are compared with CGA and MGA tuned FOPID controllers. The results indicate that the ABC tuned controller is better in terms of time domain characteristics, control effort, and specified performance indices.
- Further to show the usefulness of the proposed controller design, an experimental model is developed, validated for selected operating conditions, and the results are compared with simulation results.

The paper is organized as follows: Section 2 presents the mathematical model and state estimation of BLDC motor. Section 3 discusses an introduction to FOPID controller and ABC algorithm. The proposed optimization problem and the adaptive control scheme are presented in Section 4. The case study given in Section 5 illustrates the use of the ABC algorithm for BLDC motor and the results are compared with CGA and MGA methods. Also, the experimental model is developed and selected tests are accompanied to show the superiority of the given method. The concluding remarks and the future directions of the research work are presented in Section 6.

2. Mathematical model and state estimation of BLDC motor

The mathematical modeling of BLDC motor is derived based on the assumed machine parameters such as induced current (I) and voltage (V) on the Permanent Magnet (PM) rotor side and no harmonics on the stator winding side [36]. In addition to the above assumptions, iron losses (L_i) and stray losses (L_s) are also ignored [37]. Based on the electrical parameters BLDC model is obtained and as follows [38]

$$\begin{bmatrix} v_{as} \\ v_{bs} \\ v_{cs} \end{bmatrix} = \begin{bmatrix} R_s & 0 & 0 \\ 0 & R_s & 0 \\ 0 & 0 & R_s \end{bmatrix} \begin{bmatrix} i_{as} \\ i_{bs} \\ i_{cs} \end{bmatrix} + \begin{bmatrix} L_{aa} & L_{ab} & L_{ac} \\ L_{ba} & L_{bb} & L_{bc} \\ L_{ca} & L_{cb} & L_{cc} \end{bmatrix} \begin{bmatrix} i_a \\ i_b \\ i_c \end{bmatrix} + \begin{bmatrix} e_{as} \\ e_{bs} \\ e_{cs} \end{bmatrix} \tag{1}$$

where, R_s is the stator winding resistance. Assume all the phases of 3ϕ supply are equally distributed. The induced Electro-Magnetic Forces (EMF's) e_{as}, e_{bs} and e_{cs} are simulated as a trapezoidal waveform. E_p is the peak to peak value and written as

$$E_p = (Blv)\,N = \lambda_p \omega_m \tag{2}$$

where, l is the length of the conductor, v is the velocity, B is the flux density of the field winding N is the number of current carrying conductors, and ω_m is the angular velocity of the rotor. The product Blr, denoted as (φ_a) and it is related to the air gap flux (φ_g). Where, r is the radius of the PM rotor. Hence

$$\varphi_a = \frac{1}{\pi} B\pi lr; \varphi_a = \frac{1}{\pi}\varphi_g \tag{3}$$

The electrical torque developed by the motor is

$$T_e = \left[e_{as}i_{as} + e_{bs}i_{bs} + e_{cs}i_{cs}\right]\frac{1}{\omega_m} \text{ (N m)} \tag{4}$$

The instantaneous EMF induced are as follows:

$$e_{as} = f_{as}(\theta_r)\lambda_p\omega_m \tag{5}$$

$$e_{bs} = f_{bs}(\theta_r)\lambda_p\omega_m \tag{6}$$

$$e_{cs} = f_{cs}(\theta_r)\lambda_p\omega_m \tag{7}$$

The electro-magnetic torque is given as

$$T_e = \lambda_p f_{as} i_{as}\left(\theta_r\right) + \lambda_p f_{bs} i_{bs}\left(\theta_r\right) + \lambda_p f_{cs} i_{cs}\left(\theta_r\right) \text{ (N m)} \tag{8}$$

Under steady state condition, the equation of BLDC motor motion with inertia J, load torque T_L and friction co-efficient B is

$$J\frac{d\omega_m}{dt} + B\omega_m = (T_e - T_L) \tag{9}$$

PM rotor speed and rotor position are associated as

$$\frac{d\theta_r}{dt} = \frac{P}{2}\omega_m \tag{10}$$

where, P is the number of poles, θ_r is the PM rotor position in radian and ω_m is the rotor speed in mechanical rad/sec, f_{as}, f_{bs}, and f_{cs} are the trapezoidal functions, and λ_p is the flux linkages.

2.1. Sensorless speed control of BLDC motor

In this section, the Kalman Filter (KF) method is used for estimating the speed of the motor. The factors to be considered for estimating the speed of the motor are (i) Dynamic state model for a linear machine (ii) Selection of machine model and (iii) Calculation of system gradient and measurement matrices [3]. The estimation is performed by using the stator winding line voltage and current. The state space model of the linear system in digital domain is shown in Fig. 1.

The control strategy of a KF is based on back-EMF per phase which is shown below:

$$\begin{cases} e_{AB} = u_{AG} - u_{BG} - (L-M)\dfrac{d(i_{A-}i_B)}{dt} - \mathrm{R}(i_{A-}i_B) \\ e_{AC} = u_{AG} - u_{CG} - (L-M)\dfrac{d(i_{A-}i_C)}{dt} - \mathrm{R}(i_{A-}i_C) \\ e_{BC} = u_{BG} - u_{CG} - (L-M)\dfrac{d(i_{B-}i_C)}{dt} - \mathrm{R}(i_{B-}i_C) \end{cases} \tag{11}$$

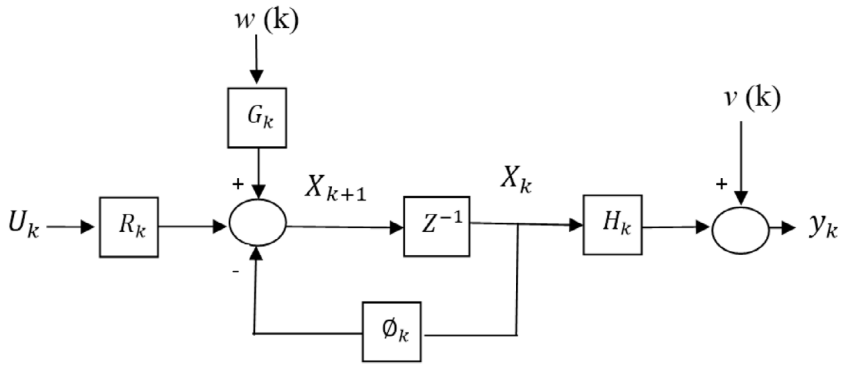

Fig. 1. State space model of a linear system [3].

The relationship of three phase back — EMFs is given as

$$e_{BC} = e_{AC} - e_{AB} \tag{12}$$

The voltage model is obtained as

$$U_1 = \begin{bmatrix} 2\left(R + \frac{d}{dt}(L-M)\right) & 0 \\ R + \frac{d}{dt}(L-M) & 3\left(R + \frac{d}{dt}(L-M)\right) \end{bmatrix} I_1 + E_1 \tag{13}$$

The discrete state model is as follows

$$X_{k+1} = \Phi_k K_k + R_k U_k + G_k w(k) \tag{14}$$

$$y_k = H_k X_k + v(k) \tag{15}$$

where, $X_k = [i_{AB}(k) i_{AC}(k) e_{AB}(k)\, e_{AC}(k) \omega(k)]^T$

$$R_k = \begin{bmatrix} \frac{T}{2(L-M)} & -\frac{T}{6(L-M)} 0 & 0 & 0 \\ 0 & \frac{T}{3(L-M)} 0 & 0 & 0 \end{bmatrix}^T$$

$$U_k = [u_{AB}(k) u_{AC}(k)]^T$$

$$y_k = [i_{AB}(k) i_{AC}(k)]^T$$

$$\Phi_k = \begin{bmatrix} 1 - \frac{RT}{L-M} & 0 & -\frac{T}{2(L-M)} & 0 & 0 \\ 0 & 1 - \frac{RT}{L-M} & \frac{T}{6(L-M)} & -\frac{T}{3(L-M)} & 0 \\ 0 & 0 & 1 & 0 & 0 \\ 0 & 0 & 0 & 1 & 0 \\ 0 & 0 & 0 & 0 & 1 \end{bmatrix}$$

$$H_k = \begin{bmatrix} 1 & 0 & 0 & 0 & 0 \\ 0 & 1 & 0 & 0 & 0 \end{bmatrix}$$

The state prediction equation is given as

$$\hat{X}_{K+1|K} = \Phi_k \hat{X}_{K|K-1} + K_k \left(y_k - H_k \hat{X}_{K|K-1}\right) \tag{16}$$

$$= \left(\Phi_k - K_k H_k\right) \hat{X}_{K|K-1} + K_k y_k \tag{17}$$

where,

$$K_k = \Phi_k P_{k|k-1} H_K^T \left(H_k P_{k|k-1} H_k^T + R_k\right)^{-1} \tag{18}$$

The prediction equation is

$$P_{k+1|k} = \Phi_k \left[P_{k|k-1} - P_{k|k-1} H_k^T \left(H_k P_{k|k-1} H_k^T + R_k\right)^{-1} H_k P_{k|k-1}\right] \Phi_K^T + G_k Q G_k^T \tag{19}$$

The estimation and the error covariance can be simplified by

$$\hat{X}_{K|K} = \hat{X}_{K|K-1} + P_{k|k-1} H_k^T \left(H_k P_{k|k-1} H_k^T + R_k\right)^{-1} (y_k - H_k \hat{X}_{K|K-1}) \tag{20}$$

$$P_{k|k} = P_{k|k-1} - P_{k|k-1} H_k^T \left(H_k P_{k|k-1} H_k^T + R_k\right)^{-1} H_k P_{k|k-1} \tag{21}$$

Hence, a commutation sequence is obtained based on the line-back EMF calculated by a KF method [3].

3. Basics of FOPID controller and ABC algorithm

3.1. FOPID controller

It is interesting to note that more than half of the industries are using modified PID controllers or higher order controllers approximated from FOPID controller [10]. The analytical function of FOPID controller is represented by

$$G_c(s) = \frac{\mathrm{U(s)}}{\mathrm{e(s)}} = KP + K_{\mathrm{I}} S^{-\lambda} + K_{\mathrm{D}} S^{\mu} (\lambda, \mu > 0) \tag{22}$$

It consists of five tuning parameters, namely Proportional gain (K_{p}), Integral gain (K_{i}), Integral order (λ), Derivative gain (K_{d}), and Derivative order (μ). Time domain characteristics equation of the FOPID Controller is

$$U(t) = K_{\mathrm{P}} e(t) + K_{\mathrm{I}} D^{-\lambda} e(t) + K_{\mathrm{D}} D^{\mu} e(t) \tag{23}$$

This equation is used for generating the control signal.

3.2. ABC algorithm

The ABC algorithm is modeled based on the behavior of natural bees to get an optimal solution for solving constrained problems. The features of ABC algorithm are (i) Minimum control parameters, (ii) Quick convergence ratio and computation time (iii) Both exploration and exploitation, and (iv) Good adaptability. The steps involved in the ABC algorithm are as follows [39]

Initialization phase : $x_i^j = x_{\min}^j + \mathrm{rand}\ (0,1)\left(x_{\max}^j - x_{\min}^j\right),\ j = 1, 2, \ldots, \mathrm{D}$

Employed bees phase : $v_{ij} = x_{ij} + \phi_{ij}(x_{ij} - x_{kj})$

Unemployed bees phase : $p_i = \frac{\mathrm{fit}_i}{\sum_{i=1}^{\mathrm{SN}} \mathrm{fit}_i}$

where, $x_{\min}^j$ is the minimum bounds of x_i in jth direction, $x_{\max}^j$ is the maximum bounds of x_i in jth direction, ϕ_{ij} is a random number, D is a dimensional vector, SN is the solution number and $\mathrm{fit}_{\mathrm{i}}$ is the fitness value of ith solution of the employed bees.

3.2.1. Control parameters of ABC algorithm

The ABC algorithm generally used three important governing parameters such as a number of food sources, band limit and range of random numbers (−1, 1). The control parameter settings for ABC algorithm are as follows

- ϕ_{ij}= *rand [−1,1]*
- Limit should be $\left[\frac{ColonySize}{2}\right] * D$
- Colony size (normally 30–100 bees)

3.2.2. Flowchart

The Flowchart shows the basic sequence of execution steps to determine the optimal controller parameters using ABC [29]. It starts with an initialization of FOPID parameter boundary values, design requirements, and updated time domain specifications. The design specifications, updated time domain, and controller parameters are used to obtain the optimal parameters through the ABC algorithm. Finally, the condition is satisfied when the settling time and steady state error are within the limit (i.e, converge to optimal values). The Fig. 2 shows the flowchart for tuning the FOPID controller parameters using ABC algorithm.

4. Proposed optimization method and adaptive control scheme

4.1. Optimization problem

An objective function is utilized to acquire the optimal tuning parameters of the FOPID controller under varying set speed and load conditions. This is performed by minimizing the objective function (f_{obj})

$$f_{obj} = \sqrt{\sum_{i=0}^{T} \frac{\left(N(t)_{set_i} - N(t)_{est_i}\right)^2}{T}} \tag{24}$$

with the following design constraints:

Settling time (t_s) ≤ 1 s

Steady state error (e_{ss}) ≤ 1%

where, $N(t)_{set_i}$ is the set speed in rpm, $N(t)_{est_i}$ estimated speed of the BLDC motor using KF method and T is the sampling time.

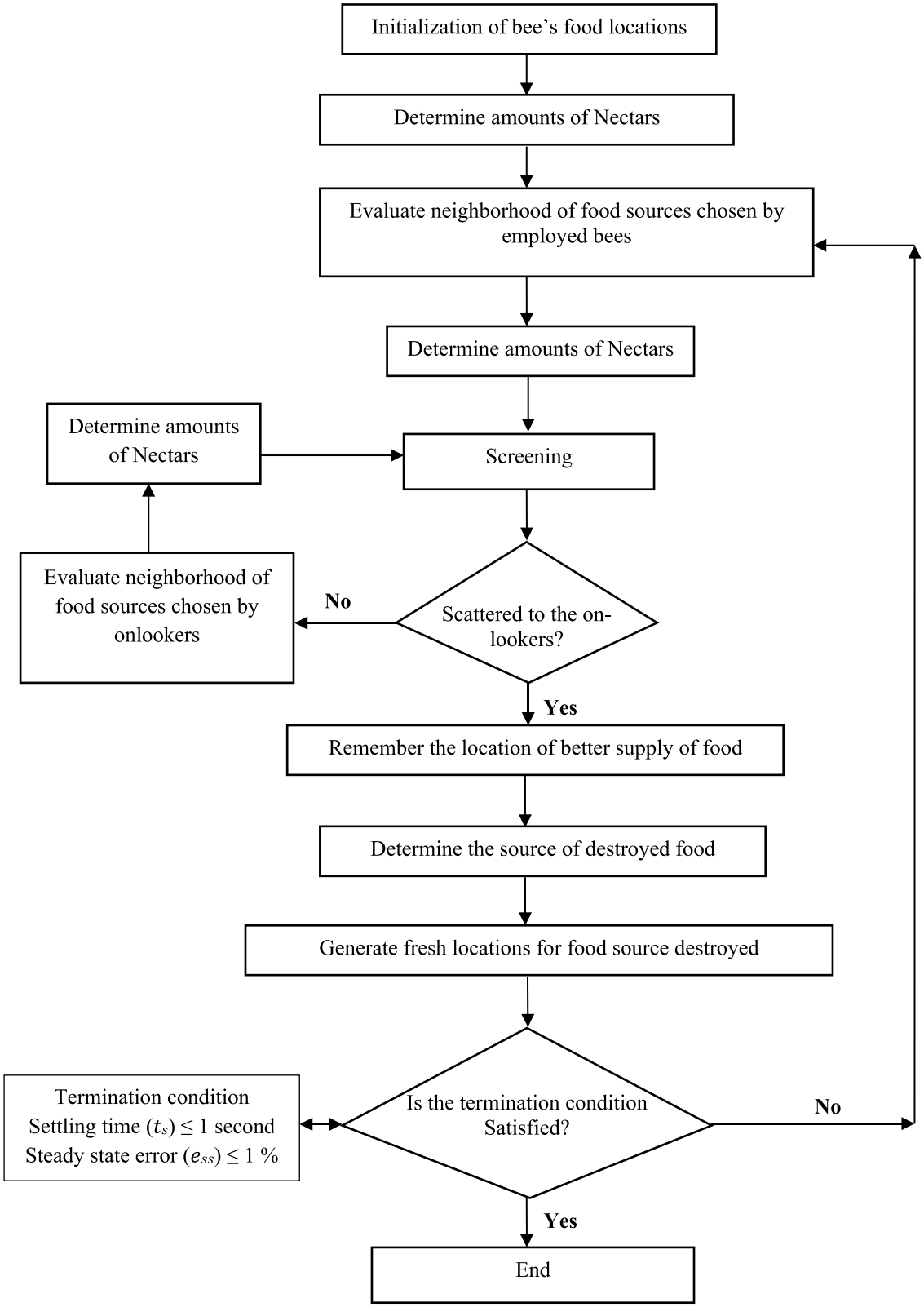

Fig. 2. Flow chart of the ABC Algorithm.

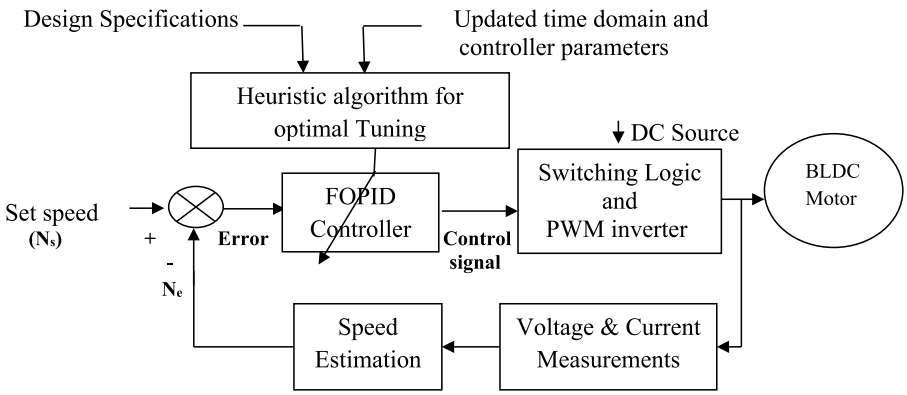

Fig. 3. Adaptive FOPID controller tuning using ABC.

4.2. Adaptive FOPID controller tuning using ABC

Optimal tuning of FOPID controllers has been always a stimulating task due to tuning of five controller parameters. This work presents STR for optimal tuning of FOPID controller in sensorless speed control of BLDC motor. The controller parameters are updated by ABC algorithm to ensure the minimum time domain characteristics and control effort. The speed is estimated by the KF method using the terminal voltage and current. The estimated speed is compared with the set speed using an error detector (i.e., the error signal). The adaptive structure of the optimal tuning of FOPID controller is presented in Fig. 3. The tuning of FOPID controller parameters using heuristic algorithms is based on the design requirements (i) set speed (N_s) (ii) error signal and (iii) updated time domain parameters. This generates an optimal tuned values of K_p, K_i, K_d, λ and μ. Based on the obtained parameters and error signal, FOPID controller produces a control signal to switching logic circuits and PWM inverter. The logic circuit produces a PWM signal to the inverter gate and hence generate rotor speed of the BLDC motor. The PWM three phase inverter controls the speed of the BLDC motor by controlling the input source (DC voltage) of the inverter.

4.3. Design steps for ABC optimized FOPID controller

This section presents a systematic design procedure of the ABC optimized FOPID controller for sensorless speed control of BLDC motor. During the initial phase, model parameters of the BLDC motor are chosen based on the motor specifications along with an initial range of FOPID controller parameters K_p, K_i, K_d, λ, and μ. The ABC starts with an initialization of parameters such as number of bees, number of food sources, limit as well as the number of iterations for getting the updated controller parameters. The following design steps are used to obtain the optimal solution of ABC tuned FOPID controller parameters:

Step 1 Initialize the source positions of artificial bee food (i) Population size 30 (ii) Number of bees 20 and (iii) Number of generation 10. Also, initialize the parameter values of BLDC motor, FOPID controller, Kalman filter for speed estimation and reference speed.

Step 2 Each and every employed bee discovered a new food source with the achievement of the improved food source and fitness call function.

Step 3: Every onlooker bee chooses the food source. This selection is based on the quality of the food and produces the new source from the chosen source with the accomplishment of the developed food source. This step determines the values of the controller parameters.

Step 4: Searching the food source to be isolated and the employed bee are consigned as scout bee for finding the new food sources. This step is used for updating the FOPID controller parameters based on the performance criteria and design constraints.

Step 5: It is remember that an outstanding food source established so far. This provides the finest optimal values K_p, K_i, K_d, λ, and μ. This ensures the minimization of an objective function to satisfy the required constraints when the settling time and steady-state error are within the limits.

Step 6: If the required design constraints are not satisfied then repeat the steps 2–5. If design constraints are satisfied then the transient time domain characteristics, steady state error, estimated speed using KF, and performance indices are computed under varying load and set speed conditions.

5. Results and discussion

In this work, the rotor speed of the BLDC motor is estimated by the KF algorithm. Based on the error signal, parameters (K_p, K_i, K_d, λ, and μ) of the FOPID controller are tuned using the proposed ABC algorithm and the existing CGA and MGA. The range of controller parameters for optimization are $0 \le K_p \le 5, 0 \le K_i \le 3$, $0 \le K_d \le 3$, $0.1 \le \lambda \le 2$ and $0.1 \le \mu \le 2$. The sampling period is chosen as 0.001 s. The specifications of BLDC motor are (i) rated power — 1.1 HP (ii) input voltage — 310 V (iii) rated current — 4.52 A (iv) rated speed — 2000 rpm and (v) rated torque — 2.5 N m. For simulation, FOPID controller is approximated to integer order by using Oustaloup Recursive Algorithm (ORA) [40]. This is done with order (N) 5 and the frequency band [0.001 to 1,000] rad/sec. The parameters used for CGA, MGA and ABC algorithms are shown in Table 1.

Table 1
Parameters selection of CGA, MGA and ABC.

CGA/MGA	ABC
Generation : 10	Generation : 10
Lower bound [λ, μ] : [0.1, 0.1]	No. of bees : 20
Upper bound [λ, μ] : [2, 2]	No. of food sources : 2
Population size : 30	Population size : 30
Trial : 30	Trial : 30
No. of bits/gene : 30	
Crossover function : 0.01	
Mutation function : 0.03	

Table 2
Fixed controller parameters.

ABC optimized FOPID controller parameters				
K_p	K_i	K_d	λ	μ
3.99	1.18	2.80	0.98	1.25

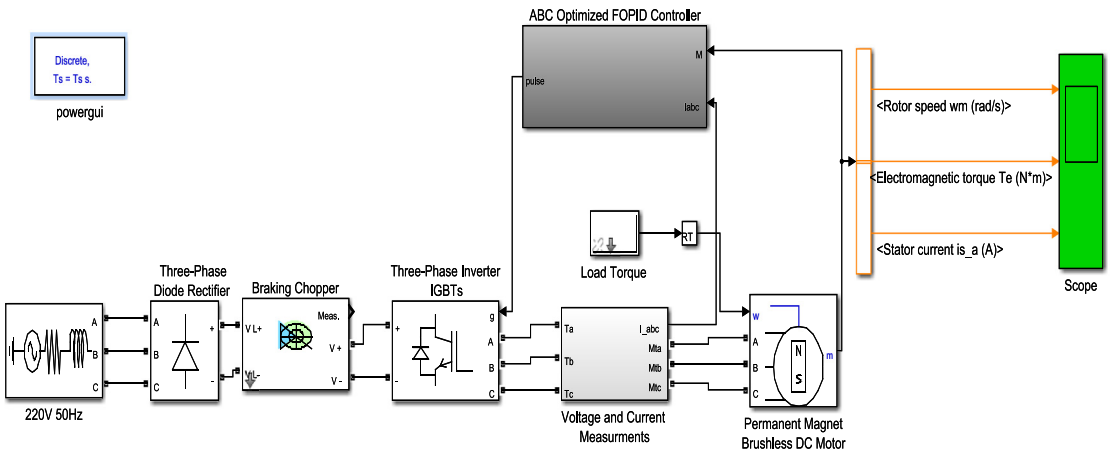

Fig. 4. Simulink representation of ABC optimized FOPID controller for sensorless BLDC motor.

5.1. Simulink representation

This section presents the Simulink model of sensorless closed loop speed control of BLDC motor using ABC optimized FOPID controller. It consists of three phase diode rectifier, Braking chopper, three phase IGBTs based inverter, voltage and current measurement devices, permanent magnet brushless DC motor and ABC optimized controller. The complete Simulink model is shown in Fig. 4. To show the internal structure of the controller block, the zoomed view is presented in Fig. 5. It consists of FOPID controller, pulse controller and functional sequence.

5.1.1. Performance with fixed FOPID controller

To show the advantage of the ABC optimized FOPID controller, the closed loop system is operated under varying load conditions or sudden load disturbances. This condition is simulated under the assumption that (i) controller parameters are fixed which is obtained for one operating condition and (ii) desired speed is at 1500 rpm. The obtained FOPID controllers using ABC algorithm is shown in Table 2.

The load variations like 20%, 40%, 60%, 80% and 100% of load torque are introduced in simulation and the corresponding time domain parameters are measured. Since the desired speed of the motor is changing as per the requirement of the industrial processes, simulation is further extended to varying set speed conditions at no load. Five different test cases are considered and as follows:

- Case A — Set speed change from 500 to 1500 rpm
- Case B — Set speed change from 1000 rpm to 1500 rpm
- Case C — Set speed change from 1500 rpm to 1000 rpm
- Case D — Set speed change from 1500 rpm to 500 rpm
- Case E — Set speed change from 1000 rpm to 500 rpm

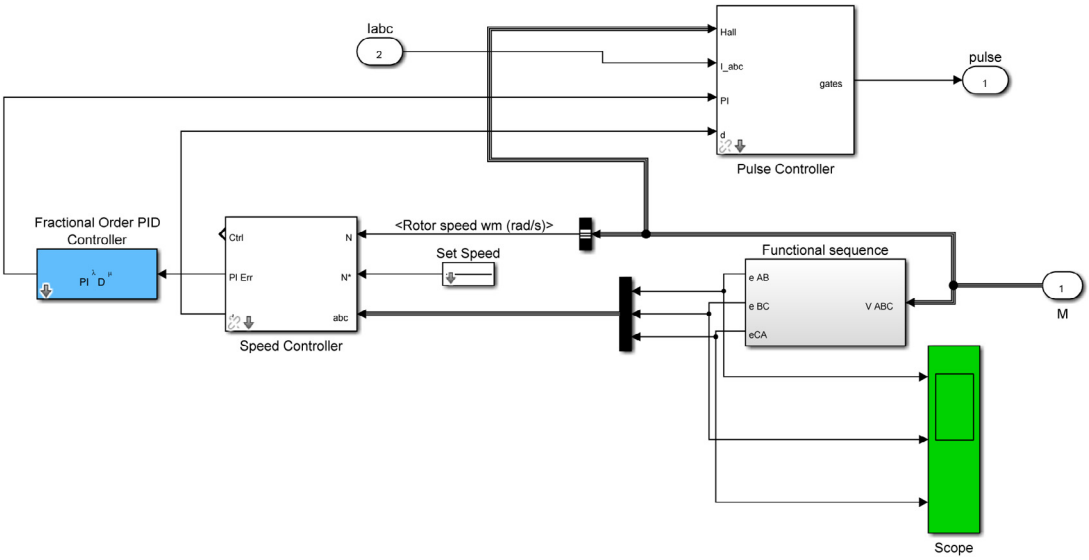

Fig. 5. Zoomed view of the proposed controller block in Fig. 4.

Table 3
Time domain characteristic, objective function value and control effort under various operating conditions.

Various operating conditions	Rise time (s)	Peak time (s)	Settling time (s)	Steady state error (%)	Objective function value	Control effort (v)
No load (T_L = 0 N m)	0.601	0.731	0.848	0.867	3.86	83.74
20% load (T_L = 0.5 N m)	0.624	0.729	0.852	0.733	4.46	77.25
40% load (T_L = 1 N m)	0.652	0.795	0.882	0.800	4.46	79.33
60% load (T_L = 1.5 N m)	0.712	0.874	0.947	0.667	5.81	80.14
80% load (T_L = 2 N m)	0.789	0.842	0.982	0.867	6.61	96.21
100% load (T_L = 2.5 N m)	0.842	0.904	0.994	0.733	6.87	93.16
Case A	0.631	0.764	0.803	0.923	2.30	43.68
Case B	0.777	0.824	0.961	0.867	3.86	52.68
Case C	0.802	0.890	0.994	0.764	3.86	53.41
Case D	0.812	0.865	0.996	0.864	3.82	54.24
Case E	0.777	0.824	0.961	0.714	3.86	52.41

The time domain characteristics like rise time, peak time, settling time and steady state error along with the value of objective function and control effort under various operating conditions are shown in Table 3. It is observed that time domain characteristics are increasing with respect to increase in load conditions. The similar trend is seen in the case of change in set speed. The results clearly indicate that the fixed controller provides poor transient and steady state characteristics in addition to increased objective function value and control effort under varying load and set speed conditions.

5.1.2. Performance with adaptive FOPID

The previous section indicates that for the fixed controller parameters, the performance of the closed loop system is degraded under various load and set speed conditions. To improve the performance of the feedback system with minimum control effort, FOPID controller is tuned under the adaptive environment. The STR structure discussed in Section 4.2 is used for updating the controller parameters under various test conditions. To show the dominance of the proposed ABC algorithm in STR environment, the comparison is performed with existing heuristic methods like (i) CGA and (ii) Modified GA (MGA). Table 4 presents the FOPID controller parameters, estimated speed using KF method, the value of the objective function, and control effort under varying load conditions for CGA, MGA, and ABC algorithms. The FOPID controller parameters, estimated speed, value of the objective function, and control effort under varying set speed conditions for CGA, MGA, and ABC algorithms are shown in Table 5.

The results given in Tables 3 and 4 indicate that the minimum value of the objective function and control effort required to meet the closed loop specification are achieved by ABC optimized FOPID controller compared with CGA and MGA based FOPID controller under various loading conditions and set speed variations. The corresponding time domain characteristic and error indices like IAE,

Table 4
Optimized FOPID controller parameters using CGA, MGA and ABC with estimated speed, value of objective function and control effort under varying load conditions.

Varying load conditions	Algorithm	FOPID parameters					Speed estimation (rpm)	Objective function value	Control effort (v)
		K_p	K_i	K_d	λ	μ			
No load (T_L = 0)	CGA	2.836	1.803	1.879	0.492	1.334	1496	3.632	32.52
	MGA	1.602	1.223	1.526	0.236	1.202	1496	2.821	29.09
	ABC	1.943	0.120	0.102	0.052	1.067	1496	2.745	28.74
20% load (T_L = 0.5 N m)	CGA	2.636	1.593	1.779	0.492	1.334	1496	3.524	28.35
	MGA	1.594	1.399	1.481	0.342	1.231	1496	2.801	27.43
	ABC	1.723	0.291	1.502	0.521	1.674	1496	2.445	25.41
40% load (T_L = 1 N m)	CGA	2.536	1.456	1.513	0.568	1.425	1496	3.526	26.59
	MGA	1.494	1.314	1.402	0.425	1.425	1496	2.631	24.01
	ABC	1.512	0.362	1.654	0.639	1.692	1496	2.406	23.08
60% load (T_L = 1.5 N m)	CGA	2.436	1.362	1.465	0.642	1.625	1497	3.362	24.35
	MGA	1.314	1.592	1.364	0.785	1.682	1497	2.524	22.08
	ABC	1.402	0.528	1.763	0.825	1.725	1497	1.925	21.27
80% load (T_L = 2 N m)	CGA	2.207	1.215	1.387	0.862	1.856	1498	2.243	20.78
	MGA	1.294	1.742	1.253	0.825	1.725	1498	2.347	18.80
	ABC	1.398	0.619	1.967	0.902	1.825	1498	1.842	17.75
100% load (T_L = 2.5 N m)	CGA	2.117	1.105	1.223	0.999	1.936	1498	2.020	18.52
	MGA	1.181	1.994	1.132	0.945	1.954	1498	2.010	16.99
	ABC	1.223	0.673	1.977	0.980	1.978	1498	1.123	15.74

Table 5
Optimized FOPID controller parameters using CGA, MGA and ABC with estimated speed, value of objective function and control effort under varying set speed conditions.

Varying set speed conditions	Algorithm	FOPID parameters					Speed estimation (rpm)	Objective function	Control effort (v)
		K_p	K_i	K_d	λ	μ			
Case A	CGA	2.936	1.803	1.889	0.498	1.334	1496	3.452	26.07
	MGA	1.962	1.623	1.596	0.246	1.202	1496	2.223	24.42
	ABC	1.803	0.201	1.542	0.058	1.097	1496	1.412	20.03
Case B	CGA	2.736	1.703	1.876	0.490	1.334	1497	3.864	24.46
	MGA	1.485	1.523	1.573	0.238	1.286	1497	2.312	21.54
	ABC	1.643	0.101	1.520	0.057	1.077	1497	1.321	18.06
Case C	CGA	2.636	1.603	1.862	0.482	1.334	996	3.682	23.90
	MGA	1.302	1.268	1.560	0.226	1.241	996	2.253	19.94
	ABC	1.443	0.211	1.512	0.054	1.032	996	1.212	16.25
Case D	CGA	2.336	1.573	1.853	0.472	1.334	498	3.287	22.26
	MGA	1.202	1.223	1.544	0.215	1.212	498	2.382	19.56
	ABC	1.343	0.201	1.508	0.053	1.027	498	1.112	16.87
Case E	CGA	2.136	1.441	1.824	0.454	1.334	497	3.117	20.64
	MGA	1.102	1.212	1.522	0.212	1.201	497	2.420	18.15
	ABC	1.243	0.201	1.501	0.052	1.017	497	1.012	15.52

ITAE, ISE and RMSE are show in Tables 6 and 7. The following expressions are used for computing the time performance indices:

$$\text{IAE} = \int |e(s)|\ \text{dt} = \int_0^T \left| N(t)_{set_i} - N(t)_{est_i} \right| \text{dt}$$
$$\text{ITAE} = \int t\,|e(s)|\ \text{dt} = \int_0^T t * (\left| N(t)_{set_i} - N(t)_{est_i} \right|)\ \text{dt}$$
$$\text{ISE} = \int e^2 \text{dt} = \int_0^T (N(t)_{set_i} - N(t)_{est_i})^{\ 2}\ \text{dt}$$

To validate the enhanced performance of the proposed control design, BLDC motor is subjected to both conditions (varying set speed and load) simultaneously. The following cases are selected for simulation: (i) Case A with varying load conditions and (ii) Case C with varying load conditions. The corresponding time domain characteristics and error indices are given in Tables 8 and 9. From the results, it is observed that ABC optimized FOPID controller is able to minimize the rise time, peak time, settling time, steady state error and error indices compared to MGA and CGA optimized FOPID controllers.

The convergence response of objective function under varying load and set speed conditions are shown in Fig. 6a and Fig. 6b. The convergence graph of error indices for Case A and 60% load condition are presented in Fig. 7 (a, b and c) and Fig. 8 (a, b and

Table 6
Time domain performance under varying load conditions.

Algorithm	Time response				Performance indices		
	Rise time t_r (s)	Peak time t_p (s)	Settling time t_s (s)	Steady state error e_{ss} (%)	IAE	ITAE	ISE
			No load (T_L = 0 N m)				
CGA	0.511	0.591	0.748	0.804	0.011	0.004	0.011
MGA	0.463	0.512	0.681	0.672	0.008	0.002	0.009
ABC	0.126	0.308	0.372	0.337	0.008	0.002	0.008
			20% load (T_L = 0.5 N m)				
CGA	0.581	0.731	0.848	0.738	0.010	0.004	0.009
MGA	0.434	0.682	0.731	0.603	0.008	0.002	0.008
ABC	0.206	0.395	0.468	0.279	0.008	0.001	0.008
			40% load (T_L = 1 N m)				
CGA	0.615	0.795	0.891	0.802	0.006	0.003	0.009
MGA	0.569	0.662	0.791	0.604	0.005	0.002	0.008
ABC	0.243	0.571	0.690	0.336	0.005	0.001	0.007
			60% load (T_L = 1.5 N m)				
CGA	0.625	0.745	0.906	0.731	0.010	0.004	0.006
MGA	0.592	0.663	0.814	0.530	0.009	0.003	0.005
ABC	0.393	0.575	0.701	0.478	0.008	0.002	0.005
			80% load (T_L = 2 N m)				
CGA	0.801	0.870	0.943	0.804	0.010	0.003	0.010
MGA	0.602	0.713	0.780	0.533	0.009	0.001	0.009
ABC	0.455	0.678	0.801	0.338	0.008	0.001	0.008
			100% load (T_L = 2.5 N m)				
CGA	0.807	0.891	0.962	0.807	0.006	0.002	0.009
MGA	0.735	0.833	0.912	0.471	0.005	0.001	0.005
ABC	0.672	0.761	0.866	0.336	0.005	0.001	0.004

Table 7
Time domain performance under varying set speed conditions.

Algorithm	Time response				Performance indices		
	Rise time t_r (s)	Peak time t_p (s)	Settling time t_s (s)	Steady state error e_{ss} (%)	IAE	ITAE	ISE
			Case A				
CGA	0.551	0.741	0.840	0.821	0.012	0.014	0.010
MGA	0.470	0.620	0.731	0.765	0.009	0.008	0.006
ABC	0.251	0.552	0.662	0.514	0.008	0.008	0.005
			Case B				
CGA	0.551	0.641	0.840	0.868	0.011	0.012	0.006
MGA	0.470	0.520	0.631	0.424	0.006	0.011	0.005
ABC	0.331	0.492	0.609	0.303	0.005	0.010	0.004
			Case C				
CGA	0.682	0.786	0.892	0.904	0.012	0.022	0.010
MGA	0.511	0.701	0.814	0.536	0.004	0.012	0.009
ABC	0.434	0.638	0.795	0.338	0.004	0.010	0.008
			Case D				
CGA	0.642	0.749	0.865	0.871	0.012	0.011	0.009
MGA	0.504	0.612	0.641	0.407	0.009	0.007	0.008
ABC	0.411	0.516	0.596	0.270	0.008	0.006	0.007
			Case E				
CGA	0.682	0.726	0.892	0.968	0.036	0.012	0.006
MGA	0.506	0.591	0.654	0.805	0.020	0.010	0.006
ABC	0.305	0.443	0.595	0.504	0.012	0.006	0.005

c) respectively. For all operating conditions, the convergence behavior indicates that ABC algorithm reaches minimum functional value when compare to CGA and MGA based tuning of FOPID controller.

Remarks: Only selected cases are used for simulation studies to avoid over the length of this paper.

From the simulation study, it is inferred that under varying load conditions such as 20% load, 40% load, 60% load, 80% load and 100% load conditions, it has been found that the steady state error of the ABC optimized FOPID controller is lesser than CGA

Table 8
Time domain performance for the integrated conditions (Case A and varying load).

Operating conditions	Algorithm	Time response				Performance indices		
		Rise time t_r (s)	Peak time t_p (s)	Settling time t_s (s)	Steady state error e_{ss} (%)	IAE	ITAE	ISE
Case A and No load	CGA	0.716	0.913	0.999	0.806	0.016	0.018	0.013
	MGA	0.611	0.806	0.920	0.632	0.012	0.010	0.008
	ABC	0.326	0.718	0.861	0.269	0.010	0.010	0.007
Case A and 20% load	CGA	0.716	0.833	0.994	0.967	0.014	0.016	0.008
	MGA	0.611	0.696	0.820	0.490	0.008	0.014	0.007
	ABC	0.430	0.640	0.792	0.367	0.007	0.013	0.005
Case A and 40% load	CGA	0.807	0.900	0.993	0.801	0.016	0.029	0.013
	MGA	0.664	0.811	0.908	0.667	0.005	0.016	0.012
	ABC	0.564	0.809	0.894	0.467	0.005	0.013	0.010
Case A and 60% load	CGA	0.835	0.914	0.996	0.826	0.016	0.014	0.012
	MGA	0.655	0.796	0.833	0.533	0.012	0.009	0.010
	ABC	0.534	0.671	0.775	0.426	0.010	0.008	0.009
Case A and 80% load	CGA	0.787	0.844	0.996	0.962	0.047	0.016	0.008
	MGA	0.658	0.768	0.850	0.733	0.026	0.013	0.008
	ABC	0.397	0.576	0.774	0.467	0.016	0.008	0.007
Case A and 100% load	CGA	0.802	0.912	0.994	0.801	0.047	0.016	0.008
	MGA	0.736	0.876	0.950	0.667	0.026	0.013	0.008
	ABC	0.466	0.642	0.790	0.467	0.016	0.008	0.007

Table 9
Time domain performance for integrated conditions (Case C and varying load).

Operating conditions	Algorithm	Time response				Performance Indices		
		Rise time t_r (s)	Peak time t_p (s)	Settling time t_s (s)	Steady state error e_{ss} (%)	IAE	ITAE	ISE
Case C and no load	CGA	0.755	0.850	0.995	0.967	0.013	0.005	0.012
	MGA	0.564	0.787	0.850	0.603	0.011	0.003	0.011
	ABC	0.368	0.514	0.608	0.424	0.010	0.001	0.010
Case C and 20% load	CGA	0.800	0.896	0.993	0.967	0.008	0.004	0.012
	MGA	0.740	0.803	0.908	0.768	0.007	0.003	0.010
	ABC	0.516	0.742	0.817	0.467	0.007	0.001	0.009
Case C and 40% load	CGA	0.813	0.909	0.995	0.967	0.013	0.005	0.008
	MGA	0.770	0.814	0.899	0.711	0.012	0.004	0.007
	ABC	0.511	0.712	0.801	0.433	0.010	0.003	0.007
Case C and 60% load	CGA	0.821	0.913	0.984	0.867	0.013	0.004	0.013
	MGA	0.783	0.867	0.902	0.633	0.012	0.002	0.012
	ABC	0.592	0.801	0.895	0.597	0.010	0.001	0.010
Case C and 80% load	CGA	0.806	0.896	0.992	0.842	0.008	0.003	0.012
	MGA	0.716	0.788	0.890	0.633	0.007	0.002	0.007
	ABC	0.674	0.709	0.814	0.567	0.007	0.001	0.005
Case C and 100% load	CGA	0.755	0.850	0.994	0.942	0.013	0.005	0.012
	MGA	0.564	0.787	0.850	0.767	0.010	0.003	0.011
	ABC	0.468	0.614	0.708	0.511	0.010	0.001	0.010

and MGA optimized FOPID controllers. Also it is observed that the ABC optimized FOPID controller produces faster settling time and takes less computation time than the other two intelligent controllers. Similar trend is observed in case of varying set speed condition and integrated conditions.

From these results, it is observed that the ABC optimized FOPID controller is performing better under a sudden change in load conditions and set point variations. The undesirable performance due to load variation is handled with good accuracy by the ABC enhanced FOPID controller compare to CGA and MGA based controllers. This shows the superiority of the ABC algorithm based FOPID tuning in adaptive STR structure.

5.2. Development of an experimental model

To show the efficiency of the proposed ABC based FOPID controller, an experimental model is made and validated for different operating conditions. The obtained results from experiments are compared with simulation results presented in Section 5.1.2

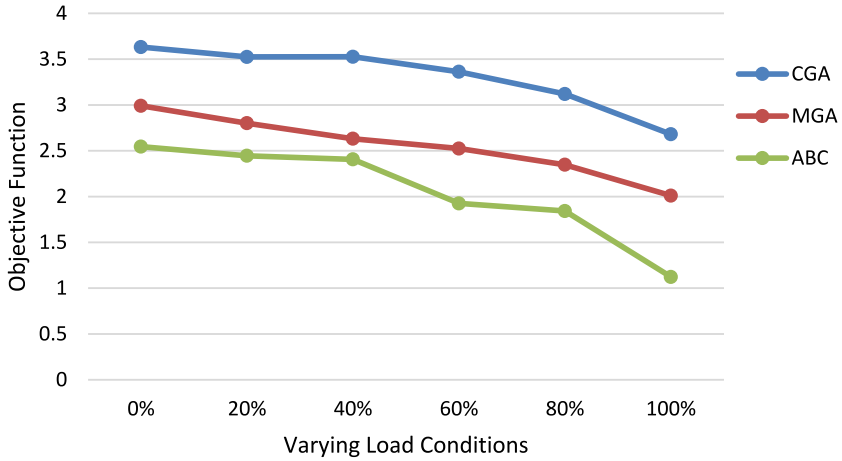

(a) Varying load conditions

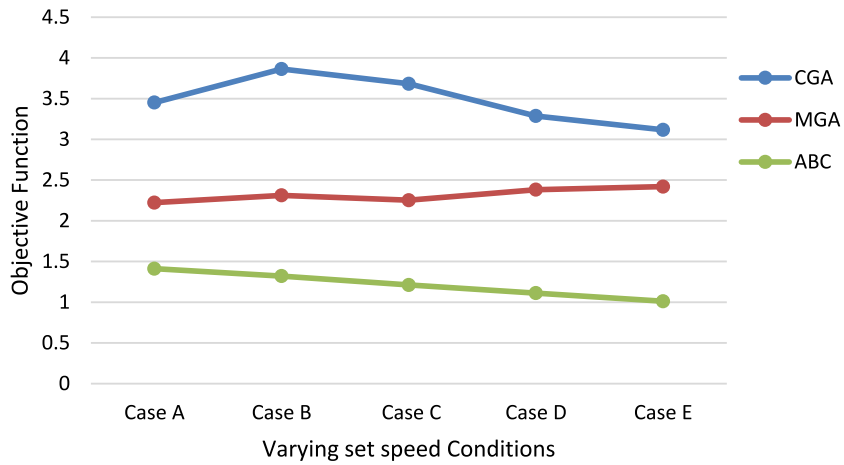

(b) Varying set speed conditions

Fig. 6. (a and b) Convergence response of objective function under various operating conditions.

The laboratory model consists of a personal computer, power module, DSP Processor-TMS320LF2407 A, autotransformer, and three-phase BLDC motor with belt load arrangement. The actual speed and set speed of the BLDC motor is monitored using a computer. The actual speed is measured with the help of proximity sensor and the desired speed is set manually using DSP Processor. The DSP Processor-TMS320LF2407 A is used for accumulating the I/O signal for both design specification and generation of PWM gate pulse. For implementation, Digital input/output (I/O) — 48, analogue inputs — 32, analogue outputs — 4, with single channel sampling rate — 250 kSamples/s and sampling period — 1 ms are selected. The laboratory setup of the proposed ABC optimized FOPID controller with BLDC motor is shown in Fig. 9.

The diode bridge rectifier circuits are used to convert AC to DC voltage which offers input to the power converter circuit [41]. The Power converter module consists of six IGBTs switches for converting from DC to AC voltage sources for achieving the desired speed control with PWM technique. The DSP controller is utilized for generating PWM signals and switching logic in sequence is carried to the IGBTs gate terminals. The output signal generated from the power converter module is fed to the BLDC motor. It is strengthened further to the DSP processor by means of an analog to digital converter. The DSP controller program for the speed control system is composed in embedded C code.

An experimentation is performed under the following selected test conditions (i) 60% and 100% load at 1500 rpm (ii) Case A and C for set speed variations at 0 N m. Fig. 10 shows the experimental results for the selected test conditions. The responses indicate that the ABC tuned FOPID controller is tracking the set speed changes and rejecting the load disturbance conditions with less settling time with negligible steady state error. VisSim/ModelWizard software is used to measure the rise time, settling time, and peak time.

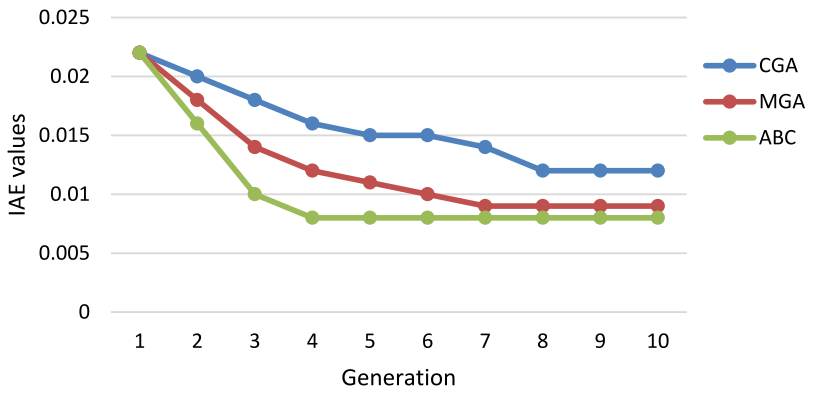

(a) IAE

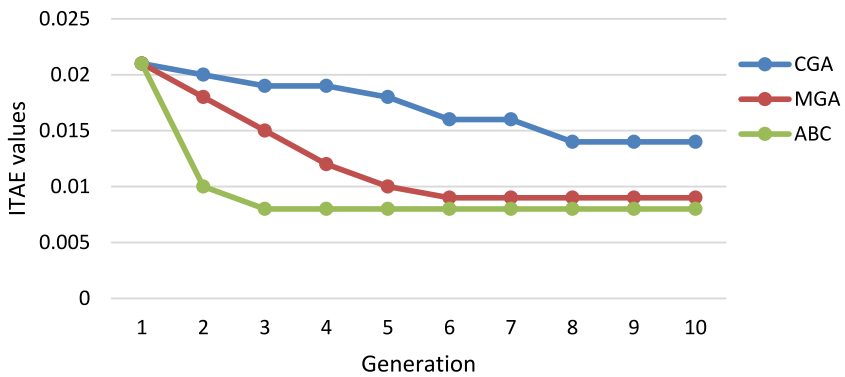

(b) ITAE

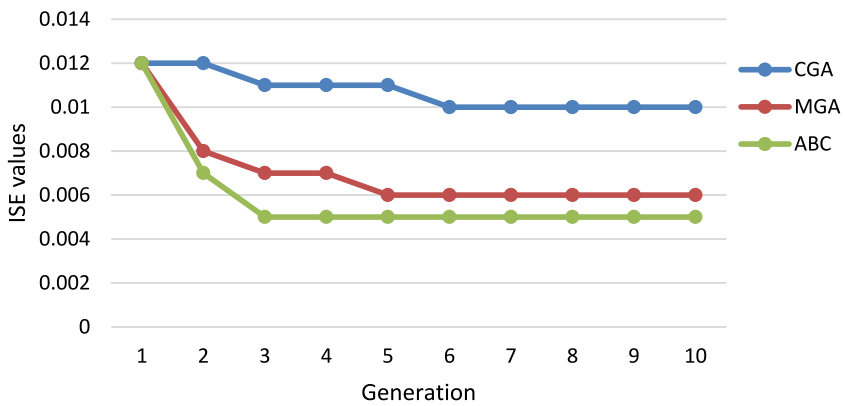

(c) ISE

Fig. 7. (a, b, and c) Convergence graph of error indices for case A.

The time domain characteristics of the closed loop system is measured for each test case and compared with simulation conditions. The corresponding numerical values are listed in Tables 10 and 11. A small deviation is observed between simulation and experimental results. This is due to (i) input voltage fluctuation (ii) nonlinearity due to switching functions and (iii) small error in speed estimation using KF.

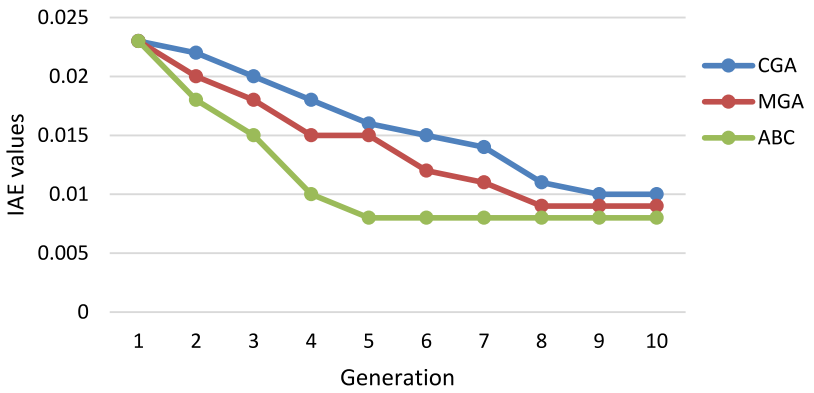

(a) IAE

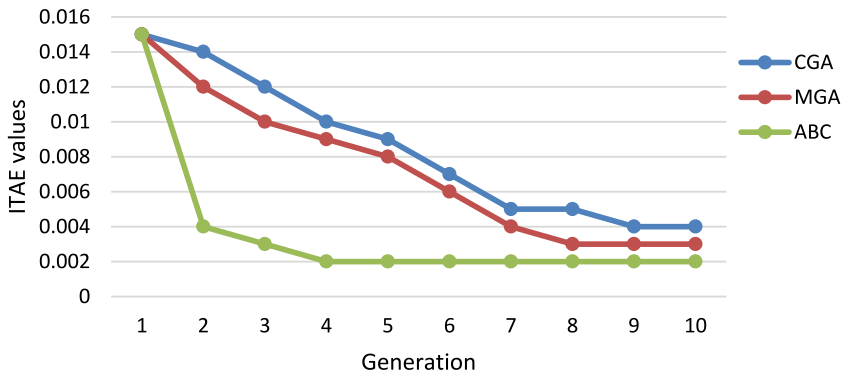

(b) ITAE

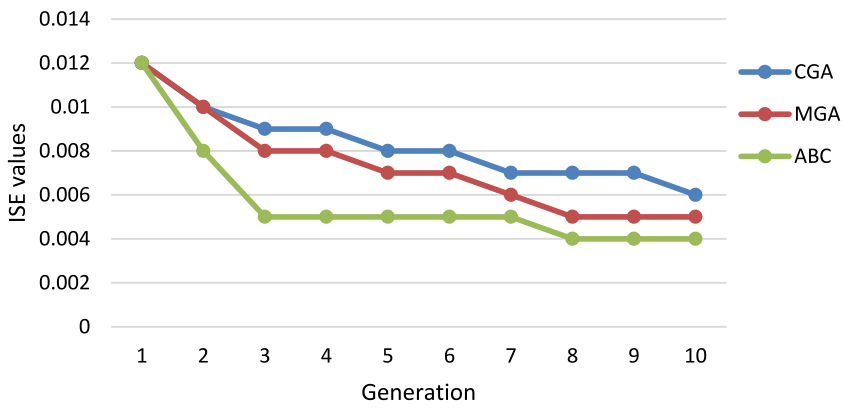

(c) ISE

Fig. 8. (a, b and c) Convergence graph of error indices under 60% load condition.

6. Conclusion

ABC based constraint optimization of FOPID controller design using STR structure was presented for enlightening the performance of BLDC motor under realistic operating conditions such as varying load conditions and set speed change. To run the system

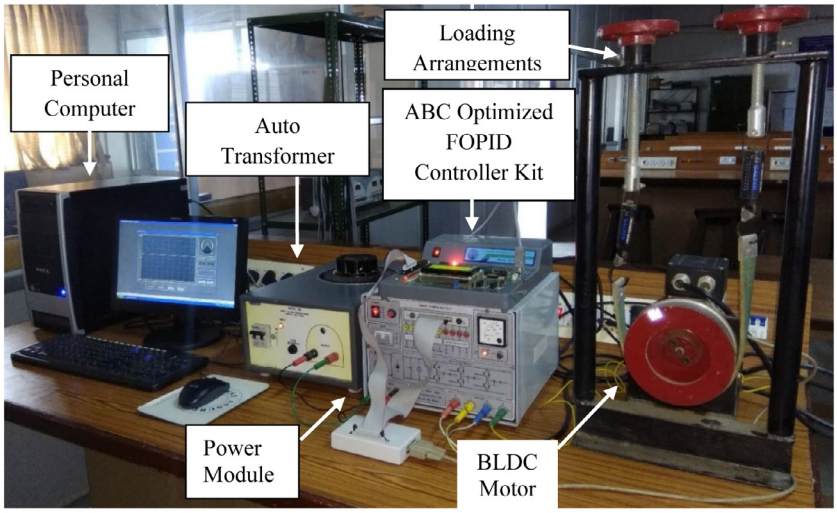

Fig. 9. Experimental setup.

Table 10
Comparison between experimental and simulation results under varying load conditions.

Operating conditions	Time domain characteristic						Steady state characteristics	
	Rise time (s)		Peak time (s)		Settling time (s)		Steady state error (%)	
	Simulation	Experiment	Simulation	Experiment	Simulation	Experiment	Simulation	Experiment
60% Load	0.393	0.452	0.575	0.717	0.701	0.845	0.478	0.533
100% Load	0.672	0.765	0.761	0.892	0.866	0.992	0.336	0.400

Table 11
Comparison between experimental and simulation results under set speed variations.

Operating conditions	Time domain characteristic						Steady state characteristics	
	Rise time (s)		Peak time (s)		Settling time (s)		Steady state error (%)	
	Simulation	Experiment	Simulation	Experiment	Simulation	Experiment	Simulation	Experiment
Case A	0.251	0.302	0.552	0.626	0.662	0.801	0.514	0.600
Case C	0.434	0.515	0.638	0.762	0.795	0.926	0.338	0.400

sensorless, a KF method was used for estimating the speed of the motor. The simulation was carried out for the proposed ABC tuned FOPID controller and the results were compared with CGA and MGA tuned FOPID controllers. The results clearly indicate that the proposed ABC tuning controller was better in terms of time domain characteristic, control effort, and selected performance indices. Further, the usefulness of the ABC tuned FOPID controller was demonstrated using the developed experimental system under selected operating conditions. The results indicates that the experimental values are closely matching with values obtained from simulation. To improve the feedback system performance, this work can be further extended (i) robustness verification of the proposed FOPID controller under plant parameter variations and (ii) tuning of FOPID controller using frequency domain specifications.

Declaration of competing interest

The authors declare that they have no known competing financial interests or personal relationships that could have appeared to influence the work reported in this paper.

Acknowledgments

This research did not receive any specific grant from funding agencies in the public, commercial, or not-for-profit sectors.

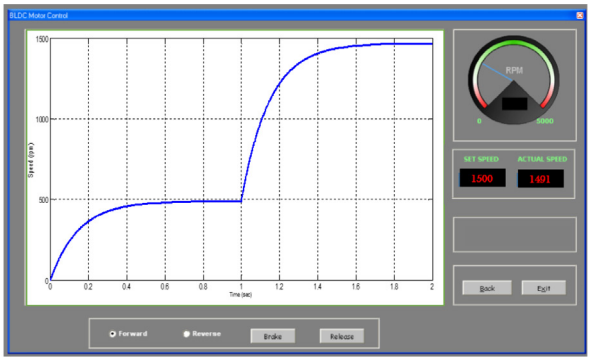

(a) Case A

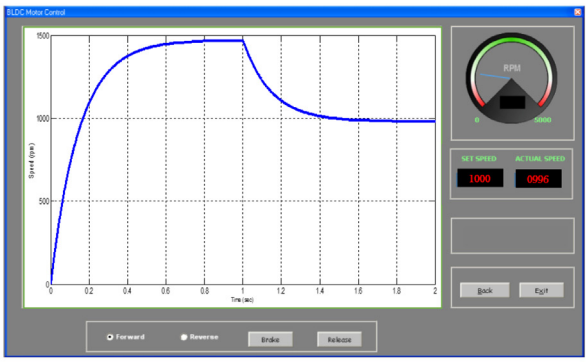

(b) Case C

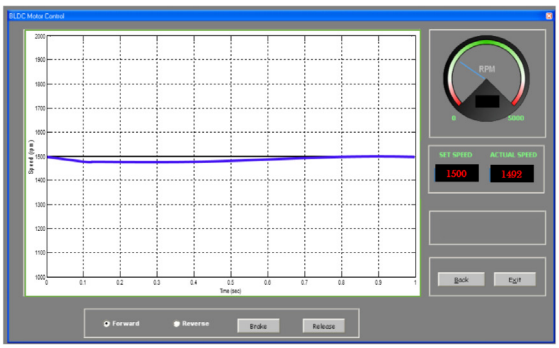

(c) 60 % load conditions

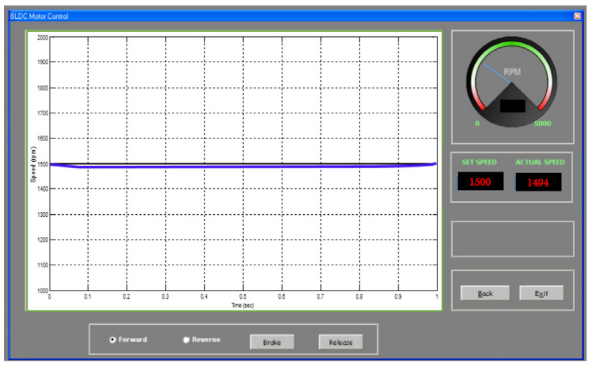

(d) 100% load condition

Fig. 10. Experimental results for selected test conditions.

References

[1] Cheshmeh Beigi HM, Karami E, Afjei E, Rouzbehi K. Numerical and experimental investigation of an improved flux path brushless-DC machine for variable speed applications. IEEE Trans Transp Electrif 2018;4(4):877–87.

[2] Terciyanli E, Demirci T, Kuçuk D, Saraç M, Çadirci I, Ermiş M. Enhanced nationwide wind-electric power monitoring and forecast system. IEEE T Ind Inform. 2013;10(2):1171–84.

[3] Xia CL. Permanent magnet brushless DC motor drives and controls. John Wiley & Sons; 2012.

[4] Kim EK, Kim J, Choi HH, Jung JW. Variable structure speed controller guaranteeing robust transient performance of an IPMSM drive. IEEE T Ind Inform. 2018;15(6):3300–10.

[5] Zhang Q, Cheng S, Wang D, Jia Z. Multiobjective design optimization of high-power circular winding brushless DC motor. IEEE T Ind Electron. 2017;65(2):1740–50.

[6] Dunkl S, Muetze A, Schoener G. Design constraints of small single-phase permanent magnet brushless DC drives for fan applications. IEEE T Ind Appl. 2015;51(4):3178–86.

[7] Khubalkar S, Junghare A, Aware M, Das S. Modeling and control of a permanent-magnet brushless DC motor drive using a fractional order proportional–integral–derivative controller. Turk J Electr Eng Co. 2017;25(5):4223–41.

[8] Podlubny I. Fractional-order systems and PIλDμ-controllers. IEEE Trans Automat Control 1999;44(1):208–14.

[9] Chen YQ, Petras I, Xue DU. Fractional order control—a tutorial. In: Proceedings of american control conference, wec02 tutorial session, grand ballroom B (east); 2009.

[10] Xue D, Chen YQ, Atherton D. Linear feedback control-analysis and design with matlab, Chapter-8: Fractionalorder controller—an introduction. Philadelphia: SIAM Press; 2007.

[11] Padula F, Visioli A. Tuning rules for optimal PID and fractional-order PID controllers. J Process Control 2011;21(1):69–81.

[12] Valerio D, Costa JSD. Introduction to single-input, single-output fractional control. IET Control Theory Appl. 2011;8(5):1033–57.

[13] Monje CA, Vinagre BM, Chen YQ, Feliu V, Lanusse P, Sabatier J. Proposals for fractional PIλDμ tuning. In: The First IFAC symposium on fractional differentiation and its applications: Bordeaux, France; 2004.

[14] Monje CA, Chen Y, Vinagre BM, Xue D, Feliu-Batlle V. Fractional-Order systems and controls: Fundamentals and applications. Springer Science & Business Media; 2010.

[15] Podlubny I. Fractional-order systems and PI/sup/spl lambda//D/sup/spl mu//-controllers. IEEE T Automat Contr. 1999;44(1):208–14.

[16] Shah P, Agashe S. Review of fractional PID controller. Mechatronics 2016;38:29–41.

[17] Angel L, Viola J. Design and statistical robustness analysis of FOPID, IOPID and SIMC PID controllers applied to a motor-generator system. IEEE Lat Am Trans 2015;13(12):3724–34.

[18] Monje CA, Vinagre BM, Feliu V, Chen Y. Tuning and auto-tuning of fractional order controllers for industry applications. Control Eng Pract 2008;16(7):798–812.

[19] Balamurugan K, Mahalakshmi R. ANFIS—Fractional order PID with inspired oppositional optimization based speed controller for brushless DC motor. Int J Wavelets Multi. 2020;18(01):1941004.

[20] Viola J, Angel L, Sebastian JM. Design and robust performance evaluation of a fractional order PID controller applied to a DC motor. IEEE/CAA J Autom Sinica 2017;4(2):304–14.

[21] De Keyser R, Muresan CI, Ionescu CM. A novel auto-tuning method for fractional order PI/PD controllers. ISA Trans 2016;62:268–75.

[22] Fergani N, Charef A. Process step response based fractional PIλDμ controller parameters tuning for desired closed loop response. Internat J Systems Sci 2016;47(3):521–32.

[23] Kesarkar AA, Selvaganesan N. Tuning of optimal fractional-order PID controller using an artificial bee colony algorithm. Syst Sci Control Eng 2015;3(1):99–105.

[24] Astrom KJ, Wittenmark B. Adaptive control. In: Courier corporation. Second edition.. Prentice Hall Publisher; 2013.

[25] Wan J, He B, Wang D, Yan T, Shen Y. Fractional-order PID motion control for AUV using cloud-model-based quantum genetic algorithm. IEEE Access. 2019;7:124828-124843.

[26] Bagis A. Determination of the PID controller parameters by modified genetic algorithm for improved performance. J Inf Sci Eng. 2007;23(5):1469–80.

[27] Roeva O. A modified genetic algorithm for a parameter identification of fermentation processes. Biotechnol Biotec Eq. 2006;20(1):202–9.

[28] Tran TC, Brandstetter P, Tran CD, Ho SD, Nguyen MCH, Phuong PN. Parameters estimation for sensorless control of induction motor drive using modify GA and CSA algorithm. In: International conference on advanced engineering theory and applications. Cham: Springer; 2018, p. 580–91.

[29] Karaboga D, Gorkemli B, Ozturk C, Karaboga N. A comprehensive survey: artificial bee colony (ABC) algorithm and applications. Artif Intell Rev 2014;42(1):21–57.

[30] Karaboga D, Basturk B. Artificial bee colony (ABC) optimization algorithm for solving constrained optimization problems. In: International fuzzy systems association world congress. Berlin, Heidelberg: Springer; 2007, p. 789–98.

[31] Rajasekhar A, Jatoth RK, Abraham A. Design of intelligent PID/PI$^{\lambda}$D$^{\mu}$ speed controller for chopper fed DC motor drive using opposition based artificial bee colony algorithm. Eng Appl Artif Intel 2014;29:13–32.

[32] El-Wakeel AS, Ellissy AEEKM, Abdel-hamed AM. A hybrid bacterial foraging-particle swarm optimization technique for optimal tuning of proportional–integral–derivative controller of a permanent magnet brushless DC motor. Electr Pow Compo Sys 2015;43(3):309–19.

[33] Bingul Z, Karahan O. Comparison of PID and FOPID controllers tuned by PSO and ABC algorithms for unstable and integrating systems with time delay. Optim Contr Appl Met 2018;39(4):1431–50.

[34] Vanchinathan K, Valluvan KR. A metaheuristic optimization approach for tuning of fractional-order PID controller for speed control of sensorless BLDC motor. J Circuit Syst Comp. 2018;27(08):1850123.

[35] Vanchinathan K, Valluvan KR. Tuning of fractional order proportional integral derivative controller for speed control of sensorless BLDC motor using artificial bee colony optimization technique. In: Intelligent and efficient electrical systems. Singapore: Springer; 2018, p. 117–27.

[36] Krishnan R. Permanent magnet synchronous and brushless DC motor drives. CRC press; 2017.

[37] Hanselman DC. Brushless permanent magnet motor design. The Writers' Collective; 2003.

[38] Pillay P, Krishnan R. Modeling, simulation, and analysis of permanent-magnet motor drives. II. The brushless DC motor drive. IEEE Trans Ind Appl 1989;25(2):274–9.

[39] Karaboga D, Akay B. A comparative study of artificial bee colony algorithm. Appl Math Comput 2009;214(1):108–32.

[40] Oustaloup A, Levron F, Mathieu B, Nanot FM. Frequency-band complex noninteger differentiator: characterization and synthesis. IEEE Trans Circuits-I. 2000;47(1):25–39.

[41] Premkumar K, Manikandan BV, Kumar CA. Antlion algorithm optimized fuzzy PID supervised on-line recurrent fuzzy neural network based controller for brushless DC motor. Electr Pow Compo Sys. 2017;45(20):2304–17.