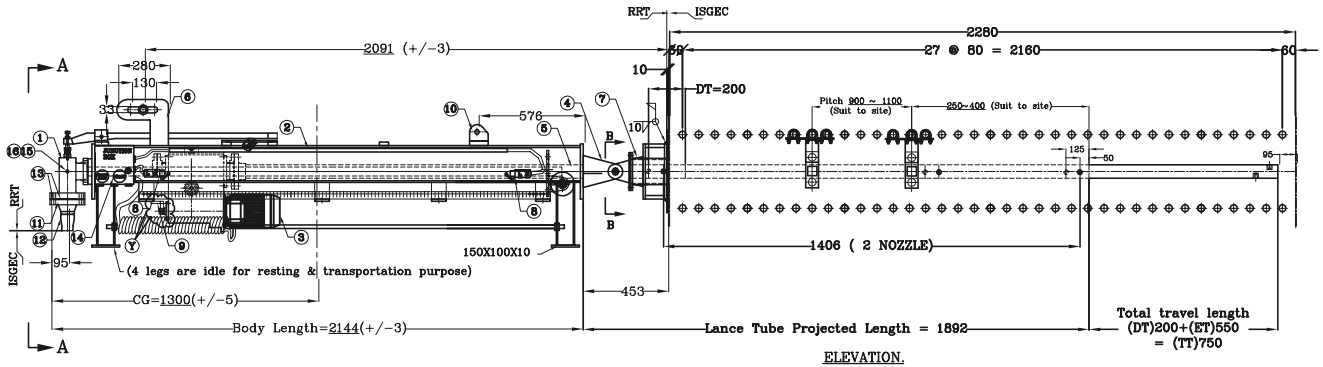

ELEVATION.

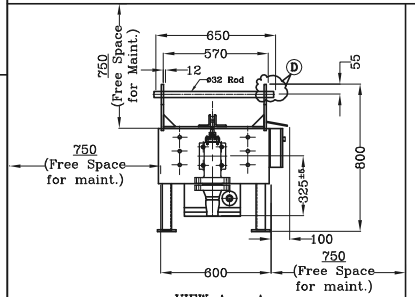

VIEW A – A

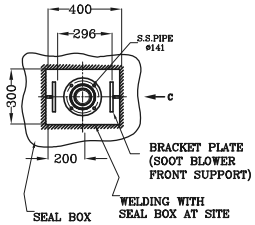

VIEW B – B

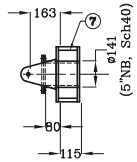

VIEW C

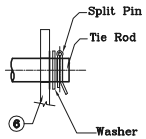

Detail –D

Locking arrangement of tie rod (RRT)

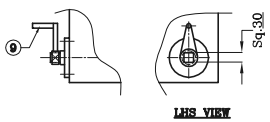

Detail –E

Handle positioned in Traveling Carriage

NOTE:
1. All Dimensions are in mm.
2. Lance Tube Rotation : Bi-Directional.
3. PO Ref. No.: P10122713/JB1034 ; Dt.: 09.11.2017
4. Load at Rear end support = 273 Kgs.
5. Load at Front end support = 512 Kgs.
6. Soot blower Lifting will be by using P.No.6 & 10
7. Lance support shall be ISGEC scope. (Location & detail of lance support refer ISGEC Drg.)

SURFACE PREPARATION & PAINTING:
Surface shall be cleaned by hand tool.
Primer Painting:Primer coat Shall be Zinc phosphate/chromite of 2x30
Final painting : synthetic enamel apple green finish of 2x40mic
Only the Poppet valve final paint shall be painted with HR Silicon(Al) 1x30mic.

ACCESSORIES:
WNRF Flange, Gasket, Fasteners, Reducer, Pr. Gauge,dcv chuck valve with nipple flange, Local JB with PB.

LUBRICATION SCHEDULE:
For Traveling Carriage, initial filling (RRT) with Servo 320 Grade Oil. Replace the oil yearly once at the time of annual maintenance. Quantity of Oil: 1.5 Ltr.

IMPORTANT NOTE:
1. Steam line should be flushing out before initial soot blowing.
2. Condansate water should not allow inside the soot blower.
3. Don't Operate manually with steam pr. more than 3Kg/cm^2
4. Allowable force & moment on SB inlet flange are,
   Force: Fx, Fy & Fz = 100kg ; Moment: Mx, My & Mz = 100kg-m

NOZZLE LOCATION NOTES:
1. Nozzle with lance tube travelled about 180~250 mm without steam(DT).
2. Poppet valve get opened once the nozzle near to the 1st coil of the boiler inside.
3. Steam will pass into nozzle, once the nozzle nearing 1st coil of the boiler inside.

36	WEIGHT OF SOOT BLOWER	Kg	850Aprox)
35	IBR FORM-IIC		WILL BE PROVIDED
34	LIMIT SWITCH MAKE & SPEC		JAI BALAJI, 2NO+2NC,
33	GEAR BOX MAKE		TRAVELING CARRIAGE (SELF)
32	MOTOR SPECIFICATION		1.5hp/1.1kw,415v,50Hz,3Ph,6P,TEFC
31	MOTOR MAKE & QTY.		Siemens/ABB & 1No.(IP-55, IE-2)
30	SIZE OF POPPET VALVE		65 NB, CLASS 600
29	MATERIAL OF POPPET VALVE		ASTM A 216 Gr.WCB
28	MATERIAL OF NOZZLE		SS 304
27	SIZE OF FEED TUBE		1-1/2"NB SCH40
26	MATERIAL OF FEED TUBE		SS 304
25	SIZE OF LANCE TUBE		2-1/2"NB SCH80
24	MATERIAL OF LANCE TUBE		SS 304
23	CLEANING INTERVAL TIME		ONCE IN A Hrs.
22	BLOWING PRESSURE		09 ~ 13 kg/cm^2
21	STEAM PRESSURE & TEMP REQD @ INLET OF POPPET VALVE		15 ~ 20 kg/cm^2 @ SUPERHEATED (Our Poppet Valve Design 50kg/cm^2 @ 425°C)
20	AVAILABLE STEAM PR&TEMP		23.5kg/cm^2@383°C (DESIGN:26.5kg/cm^2@388°C)
19	STEAM CONSUMPTION/BLOWER	kg	39
18	BLOWING RATE/BLOWER(STEAM)	kg/hr	4000
17	BLOWING TIME/BLOWER(STEAM)	sec	35
16	OPERATING TIME / BLOWER	sec	47
15	NOZZLE SIZE(CONV-DIVE TYPE)	mm	12.5 (THROAT DIA)
14	NO. OF NOZZLES	Nos.	8
13	BLOWING ANGLE	DEG	360
12	EFFECTIVE CLEANING RADIUS	mm	2500
11	ROTARY SPEED	rpm	8.3
10	TRAVERSE SPEED	mpm	1.9
09	TOTAL TRAVEL	mm	750
08	EFFECTIVE TRAVEL	mm	550
07	DEAD TRAVEL	mm	200
06	FURNACE / DUCT LENGTH	mm	2280
05	FLUE GAS TEMPERATURE	Deg.C	420
04	LOCATION		ECONOMISER
03	TAG NO. (ITEM CODE)		SRSB02
02	QUANTITY PER BOILER	Nos.	1
01	TYPE OF BLOWER		MOTORISED PARTLY RETRACTABLE
Sl.No.	DESCRIPTION	UNITS	SPECIFICATION

TECHNICAL DATA OF PRSB (PP-S08-19/SS)

ITEM.NO.	DESCRIPTION.	QTY/BLOWER.	SCOPE
16.	NRV 1/2" FOR PURGE AIR	1	RRT
15.	PR. GAUGE, 6" DIAL, 0~30kg/cm^2	1	RRT
14.	LOCAL JB WITH ES & START PB	1	RRT
13.	FASTENERS & GASKET FOR MATING FLANGE	1 SET	RRT
12.	REDUCER (65X50NB, SCH.80)	1	RRT
11.	WNRF MATING FLANGE (65NB,600#, SCH.80)	1	RRT
10.	LIFTING HOOK.	1	RRT
9.	HANDLE FOR MANUAL OPERATION	1	RRT
8.	LIMIT SWITCH.	2	RRT
7.	WALL BRACKET ARRANGEMENT.	1	RRT
6.	SUPPORTING LUGS (FORWARD)	1	RRT
5.	LANCE TUBE ASSEMBLY.	1	RRT
4.	SUPPORTING LUGS.(REAR END).	1	RRT
3.	DRIVE ASSEMBLY.	1	RRT
2.	SOOT BLOWER BODY.	1	RRT
1.	POPPET VALVE,65NB,600#.	1	RRT

BILL OF MATERIAL

REV	DATE	DESCRIPTION

DRAWN BY	CHECKED BY	APPROVED BY	DR.NO	DATE	SCALE
GOWDHAMAN	GOWDHAMAN	R.RAJSHEKHAR	51/17-014	05.12.2017	NTS

R R TECHNO MECHANICALS (P) LTD.
CHENNAI.

GENERAL ARRANGEMENT OF MOTORISED PARTLY RETRACTABLE SOOT BLOWER

CLIENT : M/s. ISGEC HEAVY ENGINEERING LTD.

PROJECT : M/s.BHAURAO CHAVAN SSK

PROJECT CODE : JB1034 | SHEET | A3 | REV | 0