Solid-State Electronics 54 (2010) 28–36

Contents lists available at ScienceDirect

Solid-State Electronics

journal homepage: www.elsevier.com/locate/sse

Analysis of noise in CMOS image sensor based on a unified time-dependent approach

Igor Brouk [a], Amikam Nemirovsky [b], Kamal Alameh [c], Yael Nemirovsky [a,*]

[a] Department of Electrical Engineering, Technion – Israel Institute of Technology, 32000, Haifa, Israel
[b] Department of Electrical Engineering, Kinneret College on the Sea of Galilee, Jordan Valley, Israel
[c] Centre of Excellence for MicroPhotonic Systems, Edith Cowan University, 270 Joondalup Drive, Joondalup, WA 6027, Australia

ARTICLE INFO

Article history:
Received 7 October 2008
Received in revised form 23 August 2009
Accepted 8 September 2009

The review of this paper was arranged by S. Cristoloveanu

Keywords:
CMOS integrated circuits
Image sensors
Photodiodes
Noise

ABSTRACT

A detailed time-domain analysis of noise due to thermal, 1/*f* and shot noise sources in CMOS active pixel sensors (APS) based on 3T and 4T pixel design is performed. We suggest that the conventional noise analysis based on the frequency domain, usually used for noise calculations of APS's cannot be strictly applied, because the switched APS circuitry under study cannot be represented as a linear time-invariant system. To calculate explicit noise expressions for noise performance we, therefore, resort to time-dependent circuit models and perform time-domain noise analysis, taking into account the stationary nature of the various noise processes. To accomplish that, we divide the operation cycle of APS to separate time phases, and in these periods of time the relevant circuits can be modeled as linear time-invariant systems represented by simple (time-domain) impulse response functions. Finally, we present and compare between the noise simulation and noise measurement results for both 3T and 4T pixels. The excellent correspondence between the analytic expressions and the measured results corroborate the validity of the theoretical results.

© 2009 Elsevier Ltd. All rights reserved.

1. Introduction

CMOS image sensors based on active pixel sensors (APS) are now the preferred technology for most imaging applications. With advanced technology, reduced channel size, novel designs extending the more established pixels based on three transistors (3T design) into four transistors (4T design employing pinned photodiodes), the performance keeps improving [1–12]. Noise sets a limit on image sensor performance, mainly under conditions of low illumination. Analysis of noise in CMOS APS has been reported by several authors [13–23 and references within].

In this paper, we present a detailed analysis of noise due to thermal, 1/*f* and shot noise sources in two types of APS, known as the 3T [1,24] and 4T pixel design [2,8–11], based on a unified time-dependent approach, using the separation of the system into two parts: time-invariant part (the APS without switching) and a time-variant part (taking into consideration the switching process).

After introducing the main noise sources of 3T and 4T APS in Section 2, the unified time-dependent approach of the current study for noise analysis is presented in Section 3. We suggest that the conventional noise analysis based on the frequency domain, usually used for noise calculations of APS's (for example, [16,20]) cannot be strictly applied, because the switched APS circuitry under study cannot be represented as a linear time-invariant system. To calculate explicit noise expressions for noise performance we, therefore, resort to time-dependent circuit models and perform time-domain noise analysis, taking into account the stationary nature of the various noise processes. Finally, in Section 4 we present the excellent comparison between the noise simulations developed in this study and measurement results of noise performed on CMOS image sensors with 3T and 4T designs, which have been simulated, designed and fabricated through CMOS processes (0.35 μm and 0.18 μm) of Tower Semiconductor Ltd. [25].

The main advantage of the presented method is that it is mathematically correct and avoids a basic flaw underlining the widely-used conventional methods (that freely use time-invariant methods for time-dependent systems). Although for many practical applications the resulting error is small, or even negligible, yet there may be situations where the resulting error may be considerable, not to mention the tutorial value of the correct method presented here.

2. The operation principles and noise sources in 3T and 4T APS

Fig. 1 exhibits the established design of APS known as 3T design [1] as well as the more advanced 4T design. In the 3T design

* Corresponding author. Tel.: +972 4 8294688; fax: +972 4 8295757.
E-mail address: nemirov@ee.technion.ac.il (Y. Nemirovsky).

0038-1101/$ - see front matter © 2009 Elsevier Ltd. All rights reserved.
doi:10.1016/j.sse.2009.09.003

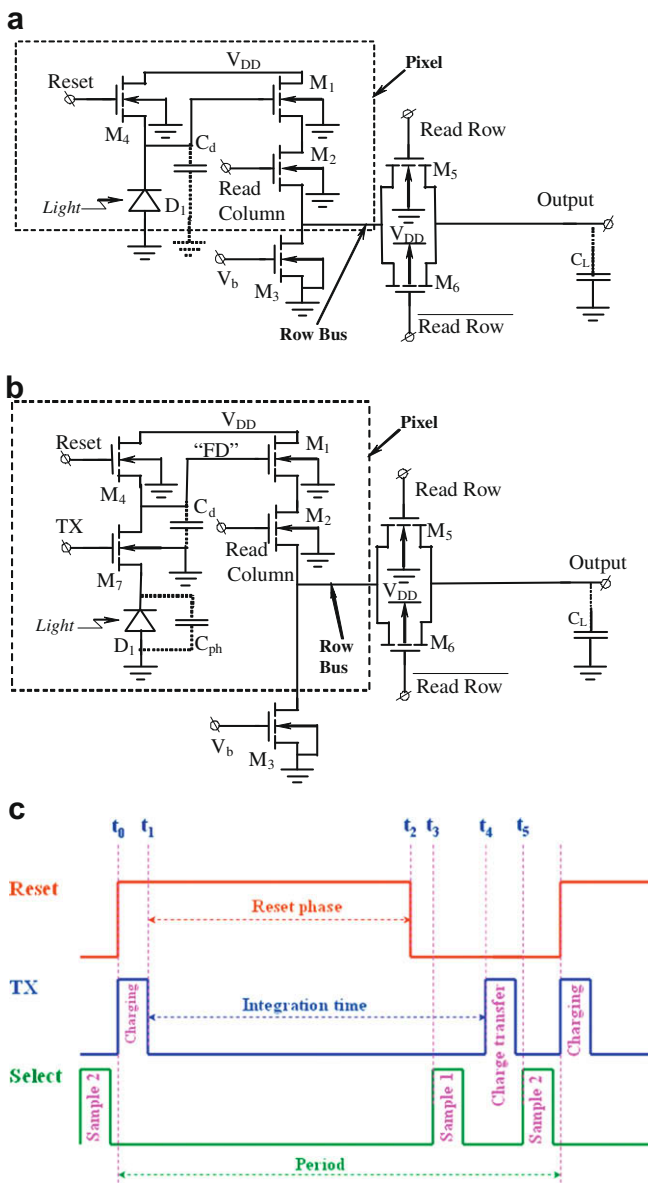

Fig. 1. APS: (a) 3T design, (b) 4T design, (c) Timing diagram for 4T design.

(Fig. 1a) each pixel consists of one photodiode and three transistors: transistor M_4 performing the reset of photodiode, transistor M_1 operating as a source follower, and transistor M_2 operating as an analog selection switch (see Fig. 1a). The APS can be designed on the base of NMOS transistors, PMOS transistors, or both NMOS and PMOS transistors [24]. The photo-signal is integrated on the floating diffusion (FD) capacitance C_d, which is comprised of the photodiode junction capacitance in parallel with the gate capacitance of transistor M_1 and the junction capacitance (source or drain) of transistor M_4.

The 4T design [2,8–11] (Fig. 1b), in turn, introduces two novel features: the regular photodiode is replaced by a pinned photodiode (PPD) (D1), which is separated from the output node by the transfer gate TX (transistor M_7) similar to the photogate version of APS [1]. It should be noted that the transfer gate TX is not a regular transistor: both the transfer gate TX and PPD are carefully optimized to remove all free electrons from the PPD to the FD. As shown in Fig. 1b, the source of the TX transistor is the N-side region of the PPD, where the N-region is floating underneath a heavy p^+ doping pinning layer (see, for example, [11]). The drain side of the TX transistor is the FD node, to which the electrons are transferred and where they are converted into voltage signal. Capacitance C_d of the FD is comprised of the gate capacitance of transistor M_1 in parallel with the source junction capacitance of transistor M_4 and the drain junction capacitance of the transfer gate TX. The rest of the components perform the same functions as in 3T design. The additional transistor TX introduces the following advantages: the FD provides an in-pixel memory cell, allowing the reset of the FD and the first sampling to be performed "in parallel" with the signal integration, thus enabling true correlated double sampling (CDS) and reduced kTC noise. These aspects are clarified by the timing diagram (Fig. 1c).

The timing diagram of the 4T pixel shown in Fig. 1c presents the sequences for three control signals: "Reset", "TX" and "Select", where "Select" describes the simultaneous operation of both switch M_2 and switch M_5–M_6 ("Select" = "Read Column" $\wedge$ "Read Row", "$\wedge$" is a symbol of logical conjunction). The operation of 4T pixel includes five phases: charging, reset, integration, charge transfer and sampling (twice). Subtracting the results of two samples by means of CDS circuit (out of pixel) and assuming that there is a correlation between two samples (i.e. the voltage at FD is constant between two samples), reset noise can be fully eliminated at the output of CDS circuit [2]. The last requirement is very important from the point of true CDS function. In order to provide the constant voltage at FD between two samples, it is necessary to decrease either the contribution of the dark- and photo-current through the FD or the time interval ($t_5 - t_3$).

The total noise related to the whole system is the RMS fluctuations of the output signal V_{OUT}; these fluctuations are contributed by several different noise sources, including:

- Shot noise of the dark and signal current [26];
- MOS transistor thermal [26–28] and $1/f$ [29–33] noise;
- Reset noise due to transistor switches, including both kTC and partition noise [34,35].

3. A novel unified time-dependent approach for noise analysis in APS

Analysis of stationary noise in time-invariant, analog (linear) systems is usually performed by using power spectral density (PSD) of the noise under consideration [16,20]. This approach is very convenient because the noise components generated in the various elements (such as resistors, transistors, photodiodes) are usually characterized in the form of PSD [26]. However, this approach is not valid when the noise cannot be modeled as a stationary random process, or if the system is not linear or is not time-invariant. A system comprising an APS operating periodically as determined by its controlling switches cannot be modeled as a time-invariant system, since its time-response does depend on the actual phase of the period. Nevertheless, it is still rather common to use PSD for noise analysis in such systems.

To overcome this difficulty, the analysis is performed in this study in the time domain and consists of the following steps:

(a) The noise component under consideration (i.e., thermal, shot or $1/f$) is represented as a sample function defined over a probability space.
(b) The system is separated into a time-invariant part (the APS without switching) and a time-variant part (i.e., the switches).
(c) The time-variant part is formulated using unit-step functions and then attributed to the sample function representation of the noise process. The result is a time-domain noise

representation, in which the noise is no longer stationary, but is equal to the original stationary process multiplied by a deterministic time-dependent function that represents the time-variant (switch/switches) effect.

(d) A convolution technique is applied to explicitly calculate the variance of the noise at the output of the system. The result is obviously time-dependent owing to the time-variant part of the system.

(e) Each phase is calculated separately (Table 1).

The above method applies to all physical noise components of the APS and comprises, therefore, a unified approach to the problem of noise analysis considered here.

3.1. Noise during charging phase (for 4T APS)

This phase (between t_0 and t_1 in Fig. 1c) is relevant for 4T APS only. During this phase the PPD is charged to the fixed pining voltage, and, therefore, no noise is generated at the PPD node (connected to the transfer gate TX).

3.2. Noise during reset phase

During this phase (between t_1 and t_2 in Fig. 1c), which is relevant for both 3T and 4T APS, the electrical charge of the noise generated by transistor M_4 and photodiode D_1 (in 3T APS), or the noise generated by transistor M_4 (in 4T APS) is integrated on the FD capacitor C_d. The result of this integration is read during the reading (sampling) phase as a DC-voltage. It should be noted that in 4T APS the photodiode does not contribute any noise in this phase since it is disconnected.

Assuming that the integration starts at time $t = 0$, the voltage across capacitor C_d can be expressed as:

$$V_{Cd}(t) = \int_{-\infty}^{\infty} h(x)i(t-x)1(t-x)dx = \frac{1}{C_d}\int_0^t e^{-\frac{x}{R_R C_d}} i(t-x)dx \tag{3.1}$$

where $h(t) = \frac{1(t)}{C_d} e^{-\frac{t}{R_R C_d}}$ is the impulse response of the RC-circuit, $1(t)$ is the unit-step function, $i(t)$ is a sample function of a random process representing the noise source current and R_R represents the channel resistance of transistor M_4. In Eq. (3.1) we suppose that capacitor C_d is constant, because we use the large gate area transistor M_1 so that the voltage-dependent photodiode capacitance is not dominant component of FD capacitance C_d.

The square of $V_{Cd}(t)$ can be written as a double integral:

$$V_{Cd}^2(t) = \frac{1}{C_d^2}\int_0^t \int_0^t e^{-\frac{x_1}{R_R C_d}} i(t-x_1) e^{-\frac{x_2}{R_R C_d}} i(t-x_2) dx_1 dx_2 \tag{3.2}$$

Taking expectation value of both sides, one can obtain:

$$E\left\{V_{Cd}^2(t)\right\} = \frac{1}{C_d^2}\int_0^t \int_0^t e^{-\frac{x_1}{R_R C_d}} e^{-\frac{x_2}{R_R C_d}} R(t-x_1, t-x_2) dx_1 dx_2 \tag{3.3}$$

where $R(t-x_1, t-x_2) = E\{i(t-x_1)i(t-x_2)\}$ is an autocorrelation function of $i(t)$. As $i(t)$ is stationary, $R(t - x_1, t - x_2) = R(x_1, x_2)$. Subtracting from $R(x_1, x_2)$ the product of expectation values $\eta_1 = E\{i(t-x_1)\}$ and $\eta_2 = E\{i(t-x_2)\}$, an expression for the time-dependent variance of the noise voltage $V_{Cd}(t)$ is obtained as follows:

$$\sigma_{V_{Cd}}^2 = \frac{1}{C_d^2}\int_0^t \int_0^t e^{-\frac{x_1}{R_R C_d}} e^{-\frac{x_2}{R_R C_d}} C(t-x_1, t-x_2) dx_1 dx_2 \tag{3.4}$$

where $C(t - x_1, t - x_2) = R(t - x_1, t - x_2) - \eta_1\eta_2$ is the auto-covariance of $i(t)$. It should be noted that while Eq. (3.4) is used for both 3T and 4T pixels, C_d is not the same for these two cases (see Section 2).

3.2.1. Variance contributed by thermal noise during reset phase (for 3T and 4T APS)

In the case that $i(t)$ represents thermal noise, the autocorrelation function can be expressed by (using [28]):

$$R(t-x_1, t-x_2) = \begin{cases} \frac{1}{2}\frac{kT}{R_R\tau} e^{-\frac{|x_2-x_1|}{\tau}} & \text{for N-type switch "Reset", subthreshold region} \\ \frac{kT}{R_R\tau} e^{-\frac{|x_2-x_1|}{\tau}} & \text{for P-type switch "Reset", linear region} \end{cases} \tag{3.5}$$

where k is Boltzmann's constant, T is an absolute temperature, τ is a characteristic time constant ("relaxation time"). Relaxation time is defined as: $\tau = \varepsilon_0 \cdot \varepsilon \cdot \rho$, where ε_0 is the permittivity of free space, ε is the relative permittivity and ρ is electrical resistivity for silicon. Typically, the relaxation time is very short (~pico-seconds). In Eq. (3.5) we assume that the reset phase duration is much larger than the settling time taking to re-charge the integration capacitor.

It should be noted that the calculated autocorrelation function depends on the type of reset transistor M_4 (N or P) and is different for N-type and P-type switches. In the case where the reset switch is implemented by an N-type transistor, this transistor has a "floating" source. During the reset phase the source voltage is increased up to a maximum, gate–source and drain–source voltages are decreased to a minimum values (non-zero), corresponding to the current "supplied" by the photodiode. Taking into account that the photodiode current is the sum of the photo-current and the leakage current, the value of drain–source current of the transistor "Reset" corresponds to the subthreshold operation region of the reset transistor. When the drain–source voltage is much more than the thermal voltage given by kT/q, the current noise PSD coming from transistor M_4 is defined by 2qI [28], corresponding to the thermal noise PSD given by $\frac{1}{2}\frac{4kT}{R_R}$. In the case where the reset switch is implemented by P-type transistor, both the gate and the source voltages of transistor M_4 are fixed during the reset phase and this corresponds to the linear operation region of transistor M_4 (with $V_{DS} \approx 0$). Under these conditions the current noise coming from transistor M_4 is defined by the thermal noise PSD of $\frac{4kT}{R_R}$.

Substituting Eq. (3.5) into Eq. (3.4), taking into account that for thermal noise $\eta_1 = \eta_2 = 0$ and solving the double integral, the following expression for the time-dependent variance at the sampling time $t = t_{Reset}$ is obtained:

$$\sigma_{Th}^2(t_{Reset}) = kTR_R S \frac{-(C_d R_R + \tau)e^{-\frac{2t_{Reset}}{C_d R_R}} + 2\tau e^{-t_{Reset}\frac{\tau + C_d R_R}{\tau C_d R_R}} - \tau + C_d R_R}{((C_d R_R)^2 - \tau^2)} \tag{3.6}$$

where t_{Reset} is the duration of reset phase ($(t_2 - t_1)$ for 4T APS) and S is a coefficient, which takes into account the type of switch "Reset" ($S = 1$ for P-type and $S = 1/2$ for N-type).

Table 1
Comparison of noise contributions between 3T and 4T design.

Noise contribution by each phase	3T APS	4T APS
Reset	√	Cancelled
Charging	–	–
Integration	√	√
Charge transfer	–	√
Sampling	√	√ (twice)

In the specific case, when $t_{\text{Reset}} \gg C_dR_R \gg \tau$, Eq. (3.6) simplifies to the expression, which corresponds to well-known "*kTC*" noise:

$$\sigma^2_{\text{Th}}(t_{\text{Reset}}) \overset{C_dR_R \gg \tau}{\cong} \begin{cases} \frac{1}{2}\frac{kT}{C_d}\left(1 - e^{-\frac{2t_{\text{Reset}}}{C_dR_R}}\right) \overset{t_{\text{Reset}} \gg C_dR_R}{\Rightarrow} \frac{kT}{2C_d} \\ \quad \text{for N-type switch "Reset"} \\ \frac{kT}{C_d}\left(1 - e^{-\frac{2t_{\text{Reset}}}{C_dR_R}}\right) \overset{t_{\text{Reset}} \gg C_dR_R}{\Rightarrow} \frac{kT}{C_d} \\ \quad \text{for P-type switch "Reset"} \end{cases} \tag{3.7}$$

The factor 1/2, which is shown in Eq. (3.7) for N-type switch, results from the subthreshold operation discussed earlier. It should be noted that the condition $C_dR_R \gg \tau$ is valid in all practical situations.

3.2.2. Variance contributed by 1/f noise during reset phase (for 3T and 4T APS)

A satisfactory and commonly used model that explains $1/f$ noise generated in CMOS transistors is the well-known "trapping–detrapping" model [24,29–33]. Accordingly, the auto-covariance of the sum of the random telegraph signals generating the "$1/f$" component is given by [33]:

$$C(t - x_1, t - x_2) = \left(\frac{I_{\text{dc}}}{N_{\text{eff}}}\right)^2 \sum_{j=1}^{N_0} \frac{1}{4} e^{-2\lambda(z_j)|x_2 - x_1|} \tag{3.8}$$

where

$$\lambda(z_j) = \frac{1}{2}\Lambda e^{-z_j\gamma} \tag{3.9}$$

and where N_0 is the average number of effective traps within the oxide layer of the transistor gate [31,32], N_{eff} is the average number of carriers within the transistor channel, γ is a tunneling parameter ($1/\gamma$ is of the order of 1 Å), Λ is the characteristic cut-off frequency ($\Lambda \cong 10^{12}$ Hz), z_j is the trap depth within the thin oxide, $\lambda(z_i)$ is the time constant for one trap, located at depth z_i inside the oxide layer and I_{dc} is the DC current through the channel of transistor "Reset" during the reset phase.

Substituting Eqs. (3.8), (3.9) to Eq. (3.4), approximating the sum in Eq. (3.8) with an integral over the oxide layer depth and solving the double integral of Eq. (3.4) with $t = t_{\text{Reset}}$ (t_{Reset} is the reset phase duration), an expression for the time-dependent variance of the $1/f$ component of $V_{\text{Cd}}(t_{\text{Reset}})$ is obtained as:

$$\sigma^2_{1/f}(t_{\text{Reset}}) = \frac{\rho_0}{2}\left(\frac{I_{\text{dc}}R_R}{N_{\text{eff}}}\right)^2 \int_{d_1}^{d_2} \frac{-(C_dR_R\lambda(z) + \frac{1}{2})e^{-\frac{2t_{\text{Reset}}}{C_dR_R}} + e^{-t_{\text{Reset}}\left(\frac{1}{C_dR_R} + 2\lambda(z)\right)} - \frac{1}{2} + \lambda(z)C_dR_R}{((2\lambda(z)C_dR_R)^2 - 1)} dz \tag{3.10}$$

where ρ_0 is the density of traps per unit depth of the oxide, d_1 and d_2 are the coordinates of lower and upper surfaces of the thin oxide,

$$\frac{I_{\text{dc}}}{N_{\text{eff}}} \cong \frac{\mu^* V_{\text{DS}}}{L^2} \tag{3.11}$$

where μ^* is the electron (or hole) mobility within the channel, V_{DS} is drain–source voltage, and L is the channel length.

Although $1/f$ noise is a stationary process, it can be seen from Eq. (3.10) that the variance of the voltage over C_d depends on the value of the reset time t_{Reset}. This is due to the fact that owing to the presence of switches, the system is not time-invariant. It should be noted that the variance given by Eq. (3.10) is proportional to the square of drain–source current of the reset transistor. Taking into account that this current is the sum of the photo-current and the leakage current and is typically low, the contribution of $1/f$ noise of transistor M_4 is negligible or small for both 3T and 4T pixels.

3.2.3. Variance contributed by shot noise during reset phase (for 3T APS only)

The discussion below is relevant for 3T pixels only since the photodiode is disconnected in this phase in 4T pixels, as discussed in Section 2.

The current flowing through p–n junction can be approximated as:

$$i(t) = q\sum_{k=1}^{M} \delta(t - t_k) \tag{3.12}$$

where $\delta(t)$ is the Dirac delta-function and q is the electron charge.

Taking into account the fact that the switch closes at $t = 0$, the voltage on capacitor C_d at time t is given by:

$$V_{\text{Cd}}(t) = i(t) * h(t) = q\sum_{k=1}^{M} h(t - t_k) \tag{3.13}$$

where, as above, $h(t) = \frac{1(t)}{C_d}e^{-\frac{t}{R_RC_d}}$ is an impulse response of RC-circuit and $1(t)$ is the unit-step function. M is random variable that represents the number of carriers crossing the junction in the time interval $[0, t]$, and $\{t_1, t_2, \ldots t_M\}$ are random variables that represent the time instants at which those charge carriers are recorded. For shot noise, these random time instances are independent of each other and each of them is uniformly distributed in the interval $[0, t]$. Also, for shot noise, the random variable M has a Poisson distribution and does not depend on $\{t_1, t_2, \ldots t_M\}$. The expectation value (i.e., average value) of V_{Cd} can be conveniently calculated by using standard conditional expectation tools (using the common $E\{Y|X\}$ symbol for denoting conditional expected value of Y, given the value of X). The result is:

$$\begin{aligned} E\{V_{\text{Cd}}(t)\} &= qE\left\{\sum_{k=0}^{M} h(t - t_k)\right\} = qE\left\{E\left\{\sum_{k=0}^{m} h(t - t_k)\middle| M = m\right\}\right\} \\ &= q\sum_{m=0}^{\infty} P(m)E\left\{\sum_{k=0}^{m} h(t - t_k)\right\} \end{aligned} \tag{3.14}$$

where $P(m)$ is the Poisson probability density of M:

$$P(m) = \frac{e^{-rt}(rt)^m}{m!} \tag{3.15}$$

The parameter "r" signifies the average rate at which carriers cross the junction, i.e. $r = N/t = I_{\text{dc}}/q$, where N is the average number of carriers crossing the junction in a time interval $[0, t]$.

Taking into account that

$$\begin{aligned} E\left\{\sum_{k=0}^{m} h(t - t_k)\right\} &= \frac{m}{t}\int_0^t h(t - x) = \frac{m}{tC_d}\int_0^t 1(t - x)e^{-\frac{t-x}{R_RC_d}}dx \\ &= \frac{m}{tC_d}\int_0^t e^{-\frac{t-x}{R_RC_d}}dx = \frac{m}{t}R_R\left(e^{-\frac{t}{R_RC_d}} - 1\right) \end{aligned} \tag{3.16}$$

substituting Eq. (3.16) in Eq. (3.14) and using Eq. (3.15), one can get:

$$E\{V_{\text{Cd}}(t)\} = qrR_R(1 - e^{-\frac{t}{R_RC_d}}) \tag{3.17}$$

The expectation value of $V^2_{\text{Cd}}(t)$ can be similarly calculated as follows:

$$\begin{aligned} E\left\{V^2_{\text{Cd}}(t)\right\} &= qE\left\{\sum_{k=0}^{M}\sum_{j=0}^{M} h(t - t_k)h(t - t_j)\right\} = \frac{q^2}{C_d^2}E\left\{\sum_{k=0}^{M} 1(t - t_k)e^{-\frac{2(t-t_k)}{R_RC_d}}\right\} \\ &+ \frac{q^2}{C_d^2}E\left\{\sum_{\substack{k=0 \\ k\neq j}}^{M}\sum_{\substack{j=0 \\ j\neq k}}^{M} 1(t - t_k)e^{-\frac{(t-t_k)}{R_RC_d}}1(t - t_j)e^{-\frac{(t-t_j)}{R_RC_d}}\right\} \end{aligned} \tag{3.18}$$

Eq. (3.18) simplifies to:

$$E\{V_{Cd}^2(t)\} = \frac{q^2 r R_R}{2C_d}\left(1 - e^{-\frac{2t}{R_R C_d}}\right) + (rqR_R)^2\left(1 - e^{-\frac{t}{R_R C_d}}\right)^2 \tag{3.19}$$

From Eq. (3.17) and Eq. (3.19) the variance of $V_{Cd}(t)$ at time $t = t_{Reset}$ due to the shot noise is:

$$\sigma_{SN}^2(t_{Reset}) = E\{V_{Cd}^2(t_{Reset})\} - (E\{V_{Cd}(t_{Reset})\})^2 = \frac{q^2 r R_R}{2C_d}\left(1 - e^{-\frac{2t_{Reset}}{R_R C_d}}\right) \Rightarrow$$

$$\overset{t_{Reset} \gg \frac{1}{2} R_R C_d}{\Rightarrow} \begin{cases} \frac{kT}{2C_d}, & \text{for N-type switch "Reset"}, \ R_R = \frac{kT}{qI_{dc}} \\ 0, & \text{for P-type switch "Reset"}, \ R_R \ll \frac{kT}{qI_{dc}} \end{cases} \tag{3.20}$$

Finally, the total variance of the voltage on capacitor C_d, at time $t = t_{Reset,}$, due to the three sources of noise (thermal, $1/f$, and shot noise) is given by:

$$\sigma^2(t_{Reset}) = \sigma_{Th}^2(t_{Reset}) + \sigma_{1/f}^2(t_{Reset}) + \sigma_{SN}^2(t_{Reset}) \tag{3.21}$$

where the first two terms of Eq. (3.21) are relevant for both 3T and 4T pixels, and the third term only contributes in the case of 3T pixels. In accordance with Eqs. (3.7) and (3.20), superposition of the thermal and the shot noise (in the case of 3T pixel) gives the well-known *kTC* noise for both N and P-type switch "Reset" for $t_{Reset} \gg R_R C_d$.

3.3. Noise during integration phase (for 3T and 4T APS)

This phase (between t_1 and t_4 in Fig. 1c) is relevant for both 3T and 4T APS. During this phase, the shot noise generated by photodiode D_1 is accumulated on integration capacitor C_d (or C_{ph} for 4T APS). Result of this integration is read during the reading phase similarly to the case of reset phase, considered above. The variance of voltage $V_{Cd}(t)$ due to the shot noise accumulated during integration phase is given by the well-known expression:

$$\sigma^2(t_{Int}) = \left(\frac{q}{C_d}\right)^2 \overline{N_e} \tag{3.22}$$

where $\overline{N_e}$ is the average number of charge carriers accumulated on the photodiode during integration phase, determined by the photocurrent as well as the dark current of the photodiode. We suppose here that capacitor C_d is constant for the same reasons as in Section 3.2. This expression is very typical for Poissonian process because the variance is proportional to the mean value.

3.4. Noise during reading (sampling) phase (for 3T and 4T APS)

This phase (at t_3 and at t_5 in Fig. 1c) is relevant for both 3T and 4T APS. During this phase the noise sources are transistors M_1, M_2, M_3, M_5–M_6 (see Fig. 1). In general, each transistor induces mainly the thermal noise and $1/f$ noise in accordance with its "individual" transfer function from the gate to the circuit output. The transfer function for each transistor is presented in [24]. In practice, transistors M_5–M_6, operating as the switch, have high conductance, and therefore their contribution to voltage noise is negligible. Transistor M_2 operates as switch as well, and, therefore, its contribution to the total noise is also negligible. Therefore, the main noise contribution during the reading phase comes from transistors M_1 and M_3.

Using the small-signal model of the source follower (for example, [36]) and neglecting capacitances and conductances, which are insignificant in this case, the source follower can be represented as an single-pole circuit, so that the transfer function for transistors M_1 and M_3 is given by:

$$H_n(\omega) = \frac{v_{out}(\omega)}{i_{d,n}(\omega)} = r_{SF_out} || \frac{1}{j\omega C_L} = \frac{1}{C_L}\frac{1}{\omega_0 + j\omega} \tag{3.23}$$

where ω is an angular frequency, $\omega_0 = (r_{SF_out}\, C_L)^{-1}$ is a pole of the transfer function, r_{SF_out} is an output impedance of the source follower [36], i_d is the AC current coming from transistor, v_{out} is the AC voltage at the source follower output, "n" is an index in transistor name, C_L is the effective output capacitance. In accordance with Eq. (3.23) the impulse response of transistors M_1 and M_3 is given by:

$$h_n(t) = 1(t)\frac{1}{C_L}e^{-\omega_0 t} \tag{3.24}$$

which is similar to the impulse response of the RC-circuit.

Substituting Eq. (3.24) into Eq. (3.1) and Eq. (3.5) into Eq. (3.4), taking into account that transistors M_1, M_3 operate in the saturation region (corresponding to $S = 2/3$) and using the small-signal model of source follower [36], one can get the variance of the voltage on the output capacitance C_L (APS matrix output) due to the thermal noise of transistors M_1 and M_3:

$$\begin{aligned} \sigma_{Th}^2(t_{Read}) &\cong \sum_{n=1;3} \frac{-\left(\frac{1}{\omega_0}+\tau\right)e^{-2t_{Read}\omega_0} + 2\tau e^{-t_{Read}\left(\frac{1}{\tau}+\omega_0\right)} - \tau + \frac{1}{\omega_0}}{\left(\left(\frac{1}{\omega_0}\right)^2 - \tau^2\right)} \cdot \frac{kTg_{m,n}(1+\eta_n)}{C_L^2} S\left(\frac{1}{\omega_0}\right)^2 \\ &\overset{(\omega_0)^{-1} \gg \tau}{\underset{\substack{s=2/3 \\ n=1;3}}{\Rightarrow}} \frac{2}{3}\frac{kT(g_{m,1}(1+\eta_1)+g_{m,3}(1+\eta_3))}{C_L^2\omega_0}\left(1 - e^{-2t_{Read}\omega_0}\right) \\ &\overset{(\omega_0)^{-1} \ll t_{Read}}{\underset{\eta_3=0}{\Rightarrow}} \frac{2}{3}\frac{kT}{C_L}\frac{(g_{m,1}(1+\eta_1)+g_{m,3})}{C_L\omega_0} \end{aligned} \tag{3.25}$$

where g_m, $g_{m,bs}$ are transconductances of transistor MOS ($g_{m,bs}/g_m = \eta$).

Similarly, substituting Eq. (3.24) into Eq. (3.1) and Eqs. (3.8), (3.9) into Eq. (3.4) and using the small-signal model of the source follower, one can get the variance of the voltage on the output capacitance C_L due to the $1/f$ noise of transistors M_1 and M_3:

$$\sigma_{1/f}^2(t_{Read}) \cong \sum_{n=1;3} \int_{d_1}^{d_2} \frac{-\left(\frac{\lambda_n(z)}{\omega_0}+\frac{1}{2}\right)e^{-2t_{Read}\omega_0} + e^{-t_{Read}(\omega_0+2\lambda_n(z))} - \frac{1}{2} + \frac{\lambda_n(z)}{\omega_0}}{\left(\left(2\frac{\lambda_n(z)}{\omega_0}\right)^2 - 1\right)} dz \cdot \frac{\rho_0}{2}\left(\frac{I_{dc,n}}{N_{eff,n}C_L\omega_0}\right)^2 \tag{3.26}$$

where $I_{dc,n}$ is the DC current through the channel of transistor M_n during the reading phase. Using Eq. (3.11), it is quite clear that $1/f$ noise contribution is lower for the long channel transistors. In the contrary case, the $1/f$ noise contribution of transistors M_1, M_3 (source follower) can lead to phenomena described in details in [37].

Taking into consideration that the contribution of $1/f$ noise given by Eq. (3.26) can be cancelled in 4T APS (provided that the time between two sampling pulses is short enough: for example, 1 μs), the total variance of voltage accumulated on capacitor C_L during the time interval "t_{Read}" due to the thermal and $1/f$ noise is given by:

$$\sigma^2(t_{Read}) = \begin{cases} \sigma_{Th}^2(t_{Read}) + \sigma_{1/f}^2(t_{Read}), & \text{for 3T APS} \\ \sigma_{Th}^2(t_{Read}), & \text{for 4T APS} \end{cases} \tag{3.27}$$

3.5. Noise during charge transfer phase (for 4T APS only)

This phase (at t_4 in Fig. 1c) is relevant for 4T APS only. The purpose of this phase is to transfer the charge accumulated during the integration phase from photodiode capacitance C_{ph} into capacitance C_d of FD at time t_4. As discussed in Section 2, the source of the transfer gate is the PPD. Thus, the channel of this transistor is formed by the electrons, which are actually moving from the PPD to the FD node, and the channel exists only when there are the

electrons in PPD and disappears when the last electron is removed from the PPD. Therefore, in the ideal case it can be assumed that the transfer gate TX is a lossless switch, which moves the electrons from the PPD to FD node and does not contribute the thermal noise. The fact that TX does not contribute thermal noise is similar to the established results of CCD [38]. The transfer gate TX resembles the regular CCD gates which do not introduce noise during the charge transfer. Noise is not introduced since it is assumed that the charge is completely transferred. In the non-ideal case, there are the traps within the thin oxide of TX, causing random telegraph signal and $1/f$ noise. Therefore, a possibility exists that several electrons will be trapped or de-trapped during the transfer process thus changing the total number of the electrons, which were transferred from the PPD to FD node.

Analysis of the $1/f$ noise contribution of the transfer gate TX was done in [39]. In accordance with this model, the variance of the voltage on capacitor C_d at time t_{CT} is given by:

$$\sigma^2(t_{CT}) \cong \mu_{N_TX} \frac{t_{CT}(\upsilon_H - \upsilon_L)}{\ln(\upsilon_H/\upsilon_L)} \left(\frac{q}{C_d}\right)^2 \tag{3.28}$$

where μ_{N_TX} is mean number of the traps within the transfer gate, t_{CT} is duration of the charge transfer phase, υ_H and υ_L are the highest and the lowest transition frequencies of any trap of the transfer gate, correspondingly. The estimation of the $1/f$ noise contribution of the transfer gate has been done in [39].

4. Total noise in APS: simulations vs. measurement results

The total noise at the output of APS matrix is defined as a superposition of the noise contributions during the different phases of APS operation. Since all noise sources are uncorrelated and the reset noise is cancelled in the case of 4T pixel, the total noise at the pixel output (see Fig. 1) is given by:

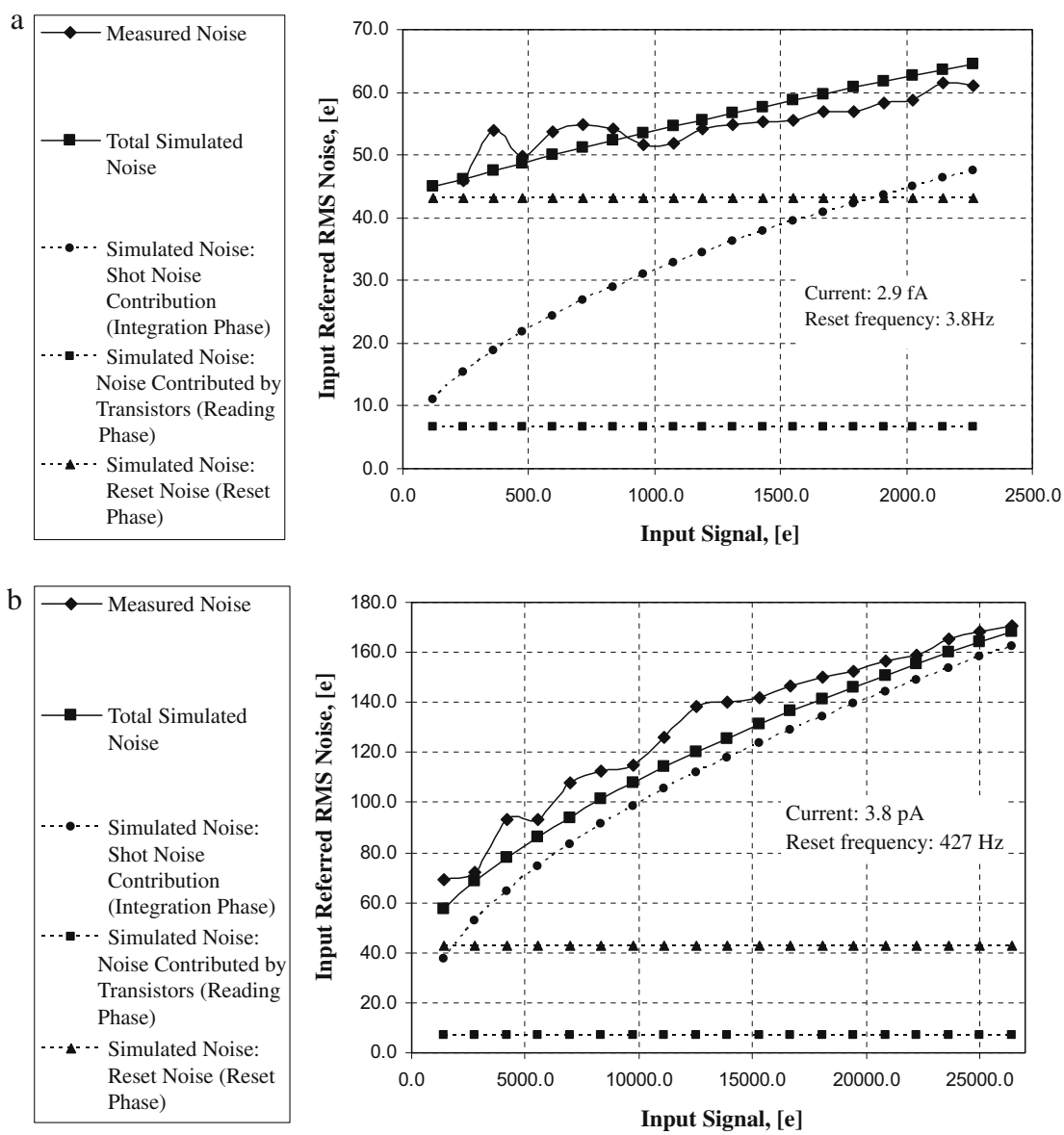

Fig. 2. Total noise in 3T APS: comparison of simulation and measurement results: (a) for relatively low level photodiode current of ~2.9 fA and (b) for relatively high level photodiode current of ~3.8 pA. The APS was fabricated through twin-well CMOS analog process (0.35 μm) of Tower Semiconductor Ltd. [25] (voltage of 3.3 V) within P-type silicon epitaxial wafers (16–24 Ω cm). Main pixel parameters are: $C_d \sim 11.5$ fF, the pixel dimensions are 20 μm × 20 μm, fill factor is 53%, the photodiode type is N-well/P-sub. The margin of error for these measurements is no more than 3%.

$$\sigma^2_{\text{Output}} \cong \begin{cases} [\sigma^2(t_{\text{Reset}}) + \sigma^2(t_{\text{Int}})]H^2_{\text{APS}} + \sigma^2(t_{\text{Read}}), & \text{for 3T APS} \\ [\sigma^2(t_{\text{Int}}) + \sigma^2(t_{\text{CT}})]H^2_{\text{APS}} + 2\sigma^2(t_{\text{Read}}), & \text{for 4T APS} \end{cases} \tag{3.29}$$

where H_{APS} is voltage gain of APS (source follower) [36].

Fig. 2 shows the measured and simulated total input referred noise in 3T APS, implemented by N-type transistors, for two different values of photodiode current. The measurements are obtained from the image sensors with 256 × 256 APS [24,40] that were fabricated in a 0.35 μm CMOS process provided by [25]. For this experiment, one pixel from the matrix was chosen constantly by means of addressing decoders, while the "Reset" transistor was biased by a rectangular wave with duty cycle of 50%. Performing the output signal capture during ~1000 periods of the "Reset" wave, defining the integration time as a time between reset and sampling moment, and assuming that the integration capacitance at the photodiode node is known, it is possible to calculate the output voltage variance for the different values of integration time.

Taking into account that $H_{\text{APS}} \approx 0.8$ here, in Fig. 2 the noise measurement results are compared with the simulation results. The measurements were performed separately for two illumination conditions: the lower illumination condition, where the image sensor was illuminated by non-monochromatic light (wavelengths of ~400–700 nm) with average power per unit area of ~0.2 mW/m^2 leading to the photo-current of 2.9 fA, and the higher illumination condition, where the image sensor was illuminated by the light of the same wavelength range with average power per unit area of ~0.2 W/m^2 leading to the photo-current of 3.8 pA. The correspondence between the measurements and simulations holds for both illumination levels. Fig. 2a exhibits the total input referred RMS noise of ~45 electrons at low illumination conditions (photodiode current of 2.9 fA) and short integration time, which is very close to the predicted value of reset noise (given by $\sqrt{kT/C_d}$). The shot noise, which increases with integration time, is initially much smaller, with an RMS noise of ~11 electrons and only for the maximum integration time exceeds the reset noise. The noise contributed by the electronics during reading phase is significantly lower than the kTC noise, with an RMS value of ~7 electrons.

Fig. 2b demonstrates that the shot noise (RMS) is the dominant noise component at higher illumination levels (photodiode current of 3.8 pA), achieving ~170 electrons in accordance with both the measured and calculated results. In this case, the reset noise and contribution of the transistors during reading phase are as in Fig. 2a.

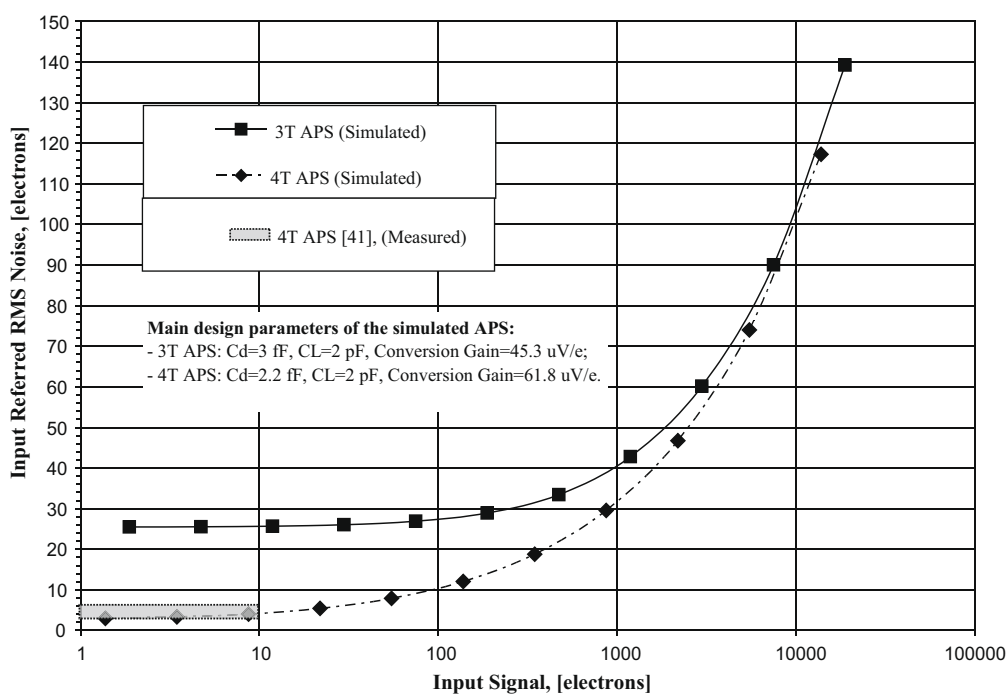

Fig. 3. Total noise in: (1) 3T APS and 4T APS (simulated in accordance with 0.18 μm specialized CIS process of Tower Semiconductor Ltd. [25]) and (2) 4T APS [41] (measured, for 4T APS, which were fabricated in 0.18 μm specialized CIS process of Tower Semiconductor Ltd. [25]).

Table 2
Main parameters of APS corresponding to Fig. 3.

	3T APS (Simulated)	4T APS (Simulated)	4T APS [41] (Measured)
Technology	0.18 μm specialized CIS process of Tower Semiconductor Ltd. [25]	0.18 μm specialized CIS process of Tower Semiconductor Ltd. [25]	0.18 μm specialized CIS process of Tower Semiconductor Ltd. [25]
Transistors per pixel	3 (N-type)	4 (N-type)	4 (N-type)
FD capacitance	See "Integration capacitance"	2.2 fF	1.5 fF–8 fF (depending on the pixel design)
Integration capacitance	3 fF	2.2 fF	1.5 fF–8 fF (depending on the pixel design)
Saturation charge	~19 ke	~14 ke	10 ke–60 ke (depending on the pixel size)
Conversion gain	45 μV/e	62 μV/e	~(20–100) μV/e (depending on the pixel design)
Minimum pixel input referred noise	~25.5 e	~3 e	3–6 e (depending on the pixel design)
Photodiode type	N-well/P-sub.	Pinned	Pinned

It should be noted that the reduction in noise during reset below kTC predicted by [13] was not observed. However, the measurement conditions in our case are different from those of [13]. In our case, the reset phase duration was much larger than the settling time required to re-charge the integration capacitor (in the worst case – tens microseconds). This settling time was estimated by simulations to be negligible relatively to the reset phase duration.

Fig. 3 shows the simulated total input referred noise in 3T APS, implemented by N-type transistors, the simulated total input referred noise in 4T APS (provided that the reset noise and $1/f$ noise contribution of the reading phase are absolutely cancelled), calculated in accordance with Eq. (3.29), and the measured total input referred noise for 4T APS [41], while the pixels were simulated/fabricated in 0.18 μm specialized CIS process provided by [25]. A summary of the main sensor characteristics is provided in Table 2. One can see that 4T APS exhibits significantly lower noise than 3T APS.

5. Conclusion

Several methods have been proposed for time-varying linear and non-linear circuits [42,43]. These methods are typically applicable to a particular circuit or a class of circuits.

This paper exhibits the noise analysis within APS, which has been done using a unified time-dependent approach allowing analysis of the switched circuits with time-varying sources. In accordance with this approach, analytic expressions have been obtained for each source of the noise as a function of time. The validity and usefulness of this approach is presented by the excellent correspondence between measured and simulated results presented in Section 4. The simulation results are in excellent agreement with the measurements (Fig. 2) demonstrating that kTC noise is dominant for low illumination level (and/or short integration time), while the shot noise is dominant in the case of high illumination level (and/or long integration time). As for comparison between 3T and 4T pixel designs, 4T APS exhibits significantly lower noise than 3T APS (Fig. 3) due to the reset noise cancellation and the unique features introduced by the PPD and the transfer gate TX.

It should be noted that analysis of noise in APS in the time domain was already performed in [13], using a time-varying circuit model, and in [21], where APS is considered as the non-linear time-variant system during integration phase only. However, the approach presented here is more fundamental and more complete. Accordingly, the noise during the reset phase is obtained here seamlessly. Moreover, the result first reported in [13] of reset noise of $kT/2C_d$ is obtained here rigorously for contribution of N-type reset switch, while a P-type switch still exhibits kT/C_d. However, once we consider also the contribution of the photodiode, the overall reset noise is still kT/C_d both for N-type and P-type reset switch. For the sake of strictness, it should be noted that the analysis of noise in APS in the time domain was performed in [13] for different operation conditions. According to [13] the settling time of the reset operation was larger than the duration of the reset phase, while in our case, as confirmed by simulations, the settling time is negligible relatively to the duration of the reset phase.

The main advantage of the rigorous method presented here is that it is mathematically correct and avoids the basic flaw underlining the widely-used conventional methods. The excellent correspondence between measured and simulated noise indicates the validity of the approach. Furthermore, it is obvious that this methodology of noise analysis can be extended and used for more complex pixel architectures.

Acknowledgements

The authors thank the CIS R&D team of Tower Semiconductor Ltd. for providing the measurements data. They also thank Dr. Assaf Lahav of Tower Semiconductor Ltd. for stimulating discussions. The comments of the reviewers are also gratefully acknowledged.

References

[1] Fossum ER. CMOS image sensor: electronic camera-on-a-chip. IEEE Trans Electron Dev 1997;44(10):1689–98.
[2] El Gamal A, Eltoukhy H. CMOS image sensors. Circ Dev Mag IEEE 2005;21(3):6–20.
[3] Moon CR, Jung J, Kwon D, Lee S-H, Roh J-S, Paik K-H, et al. The features and characteristics of 5 M CMOS image sensor with $1.9 \times 1.9\ \mu m^2$ pixels. In: IEEE international electron devices meeting; 5–7 December 2005.
[4] Kleinfelder S, Lim S, Liu X, El Gamal A. A 10000 frames/s CMOS digital pixel sensor. IEEE J Solid State Circ 2001;36(12):2049–59.
[5] Goy J, Courtois B, Karam JM, Pressecq F. Design of an APS CMOS image sensor for low light level applications using standard CMOS technology. Analog Integr Circ Signal Process 2001;29:95–104.
[6] Fowler B, Liu X(C), Vu P. CMOS image sensors – past, present, and future. In: ICIS'06 international congress of imaging science; 2006. p. 134–41.
[7] Lin C-SS, Chang M-CF, Mathur BP, Standley DL. Figure-of-merit for CMOS imagers. In: Proceedings of the SPIE-the international society for optical engineering 2002; 4669: 313–23.
[8] Mheen B, Kim M, Song Y-J, Hong S. Operation principles of 0.18-μm four-transistor CMOS image pixels with a nonfully depleted pinned photodiode. IEEE Trans Electron Dev 2006;53(11):2735–40.
[9] Lule T, Benthien S, Keller H, Mütze F, Rieve P, Seibel K, et al. Sensitivity of CMOS based imagers and scaling perspectives. IEEE Trans Electron Dev 2000;47(11):2110–22.
[10] Turchetta R. CMOS monolithic active pixel sensors (MAPS) for future vertex detectors. In: SNIC symposium, Stanford, California; 3–6 April 2006.
[11] Wang Xinyang, Rao PR, Theuwissen AJP. Fixed-pattern noise induced by transmission gate in pinned 4T CMOS image sensor pixels. In: Proceedings of the 36th European solid state device research conference, ESSDERC 2006; September 2006. p. 331–4.
[12] Li DC-Y, Gaudet VC, Basu A. Test results of various CMOS image sensor pixels. In: Canadian conference on electrical and computer engineering; 1–4 May 2005. p. 2017–20.
[13] Tian H, Fowler B, El Gamal A. Analysis of temporal noise in CMOS photodiode active pixel sensor. IEEE J Solid State Circ 2001;36(1):92–101.
[14] Findlater KM, Vaillant JM, Baxter DJ, Augier C, Herault D, Henderson RK, et al. Source follower noise limitations in CMOS active pixel sensors. In: Proceedings of the SPIE, the international society for optical engineering 2004; 5251:187–95.
[15] Faramarzpour N, Deen MJ, Shirani S. Signal and noise modeling and analysis of complementary metal-oxide semiconductor active pixel sensors. J Vac Sci Technol A 2006;24(3):879–82.
[16] Jung C, Izadi MH, La Haye ML, Chapman GH, Karim KS. Noise analysis of fault tolerant active pixel sensors. In: 20th IEEE international symposium on defect and fault tolerance in VLSI systems; 3–5 October 2005. p. 140–8.
[17] Belahrach H, Degerly Y, Karim M, Farre J. Noise modelling and simulation in CMOS active pixel sensor for low light applications. Adv Model Anal B 2001;44(1):33–54.
[18] Deptuch G, Dulinski W. Noise optimization in quarter micron process for CMOS imagers. In: Proceedings of the 8th international conference: mixed design of integrated circuits and systems MIXDES-2001; 21–23 June 2001. p. 189–94.
[19] Young Soo Kim, Cho G, Bae J-H. Analysis of noise characteristics for the active pixels in CMOS image sensors for X-ray imaging. Nucl Instrum Meth A 2006;565(1):263–7.
[20] Kawai N, Kawahito S. Noise analysis of high-gain, low-noise column readout circuits for CMOS image sensors. IEEE Trans Electron Dev 2004;51(2):185–94.
[21] Feruglio S, Vasilescu G, Alquie G, Fouad Hanna V. Exact noise analysis of a CMOS BDJ APS. In: IEEE international symposium on circuits and systems, ISCAS 2005; 23–26 May 2005; 3: 2337–40.
[22] Degerli Y, Lavernhe F, Magnan P, Farre JA. Analysis and reduction of signal readout circuitry temporal noise in CMOS image sensors for low light levels. IEEE Trans Electron Dev 2000;47(5):949–62.
[23] Tian H, El Gamal A. Analysis of 1/f noise in switched MOSFET circuits. IEEE Trans Cir Syst II 2001;48(2):151–7.
[24] Brouk I. Silicon-on-insulator (SOI) CMOS image sensor with front and backside illumination. Ph.D. Research Thesis, supervised by Prof. Y. Nemirovsky, Technion – Israel Institute of Technology; 2005.
[25] Tower Semiconductor Ltd., Migdal haemek, Israel. Available: <http://www.towersemi.com>.
[26] Van Der Ziel A. Noise in solid state devices and circuits. New York: Wiley; 1986.
[27] Klaassen FM, Prins J. Thermal noise of MOS transistors. Phillips Res Repts 1967;22:505–14.

[28] Sarpeshkar R, Delbrück T, Mead CA. White noise in MOS transistors and resistors. IEEE Circ Dev Mag 1993;9(6):23–9.
[29] Jakobson C, Bloom I, Nemirovsky Y. 1/f noise in CMOS transistors for analog applications from subthreshold to saturation. Solid-State Electron 1998;42(10):1807–17.
[30] Nemirovsky Y, Brouk I, Jakobson C. 1/f Noise in CMOS transistors for analog applications. IEEE Trans Electron Dev 2001;48(5):921–7.
[31] Brouk I, Nemirovsky Y. 1/f noise in CMOS transistors for analog applications. In: 21-th conference on electrical engineering and electronics in Israel, April, 2000.
[32] Brouk I, Nemirovsky Y. Noise characterization of the 0.35 μm CMOS analog process implemented in regular and SOI wafers. In: 11th IEEE international conference on electronics, circuits and systems, Israel; 13–15 December 2004.
[33] Nemirovsky A, Ron A. A revised model for carrier trapping–detrapping 1/f noise. Solid-State Electron 1997;41(11):1811–8.
[34] Carnes JE, Kosonocky WF. Noise sources in charge-coupled devices. RCA Rev 1972;33:327–43.
[35] Teranishi N, Mutoh N. Partition noise in CCD signal detection. IEEE Trans Electron Dev 1986;ED-33:1696–701.
[36] Allen PE, Holberg DR. CMOS analog circuit design. 2nd ed. New York: Oxford University Press; 2002.
[37] Leyris C, Martinez F, Valenza M, Hoffmann A, Vildeuil JC, Roy F. Impact of random telegraph signal in CMOS image sensors for low-light levels. In: Proceedings of the 32-nd European solid-state circuits conference, ESSCIRC 2006. p. 376–9.
[38] Liu X, Fowler B, Onishi S, Vu P, Wen DD, Do H, et al. CCD/CMOS hybrid FPA for low ligh level imaging. In: Proceedings of SPIE, 5881, 2005.
[39] Fowler B, Liu X(C). Charge transfer noise in image sensors. In: 2007 international image sensor workshop organized by ImageSensors Inc.; June 7–10 2007. p. 51–4.
[40] Brouk I, Alameh K, Nemirovsky Y. Design and characterization of CMOS/SOI image sensors. IEEE Trans Electron Dev 2007;54(3):468–75.
[41] Lahav A, Veinger D, Fenigstein A, Shiwalkar A. Optimization of random telegraph noise non uniformity in a CMOS pixel with a pinned-photodiode. In: 2007 international image sensor workshop organized by ImageSensors Inc.; June 7–10 2007. p. 230–3.
[42] Fowler B, Godfrey MD, Mims S. Reset noise reduction in capacitive sensors. IEEE Trans Circ Syst I 2006;53(8):1658–69.
[43] Vasudevan V. A time-domain technique for computation of noise-spectral density in linear and nonlinear time-varying circuits. IEEE Trans Circ Syst I 2004;51(2):422–33.