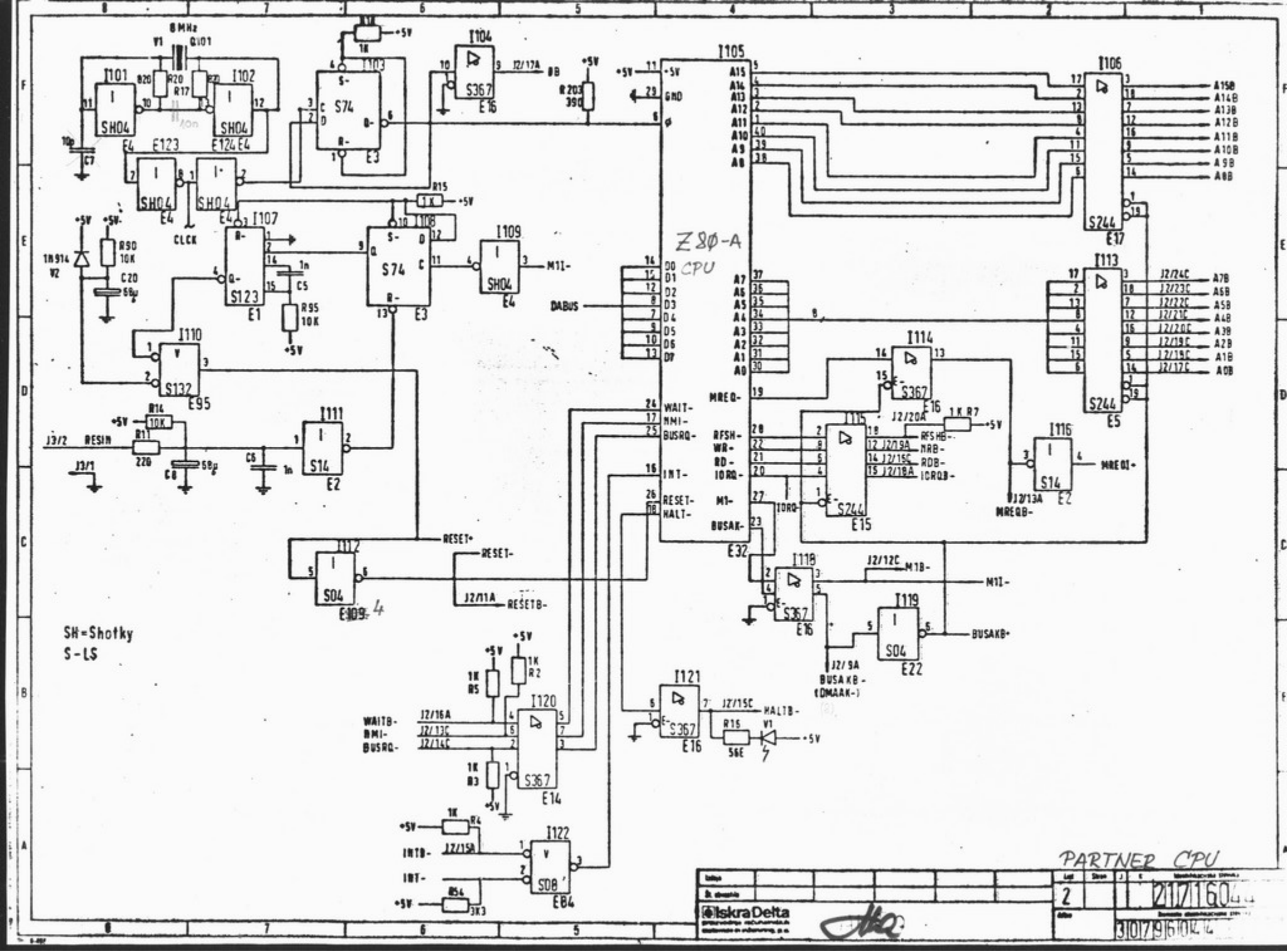

Z80-A CPU
SH=Shotky
S-LS
PARTNER CPU
Iskra Delta
2

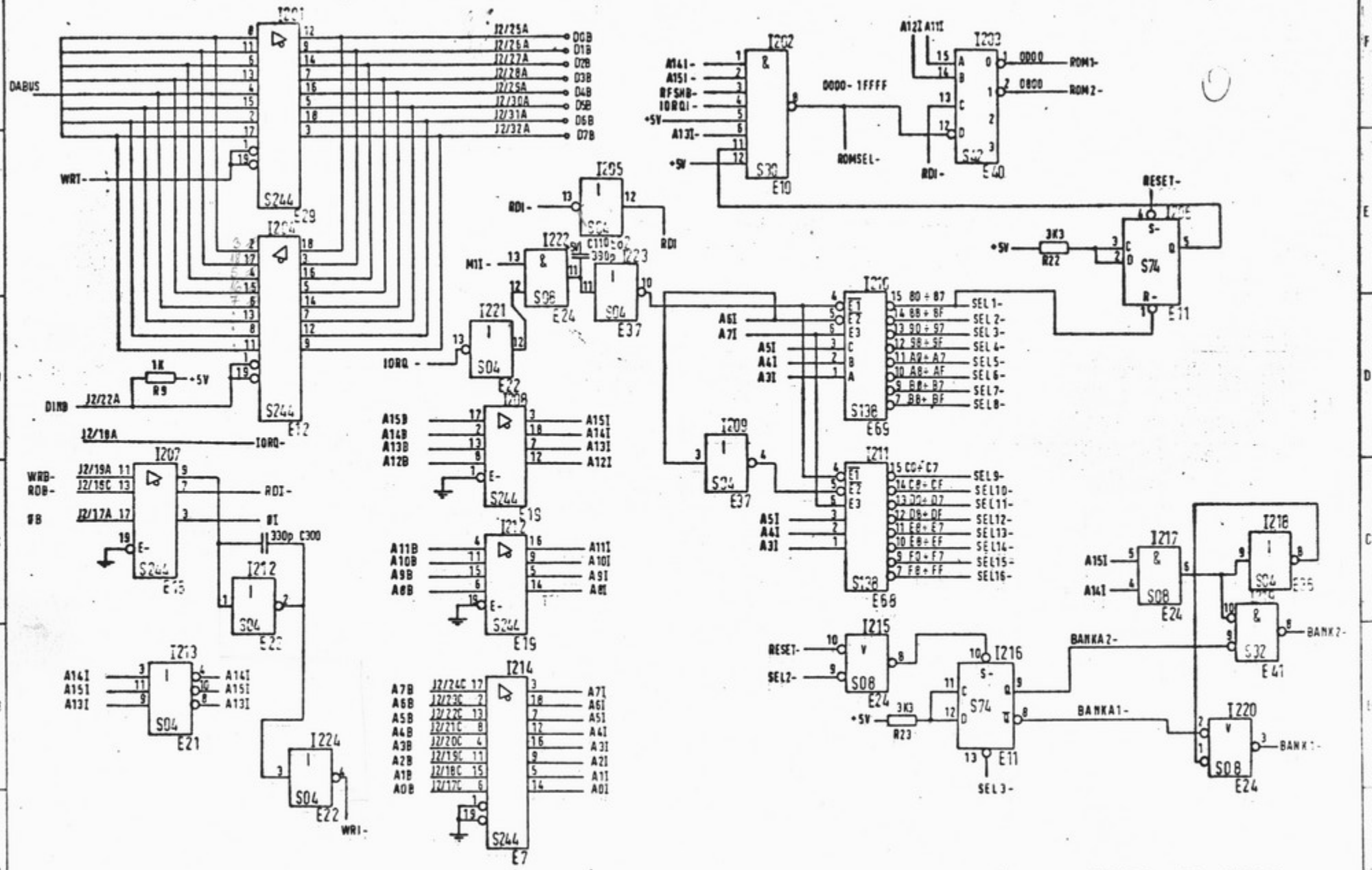

PARTNER CPU

List	Strana	J	K	Identifikaciska stevilka
3				21716044

Iskra Delta
proizvodnja računalnikov
sistemov in inženiring, p.o.

Izdaja

Št. obvestila

Izdav

Barvnik identifikacijska stevilka

30796044

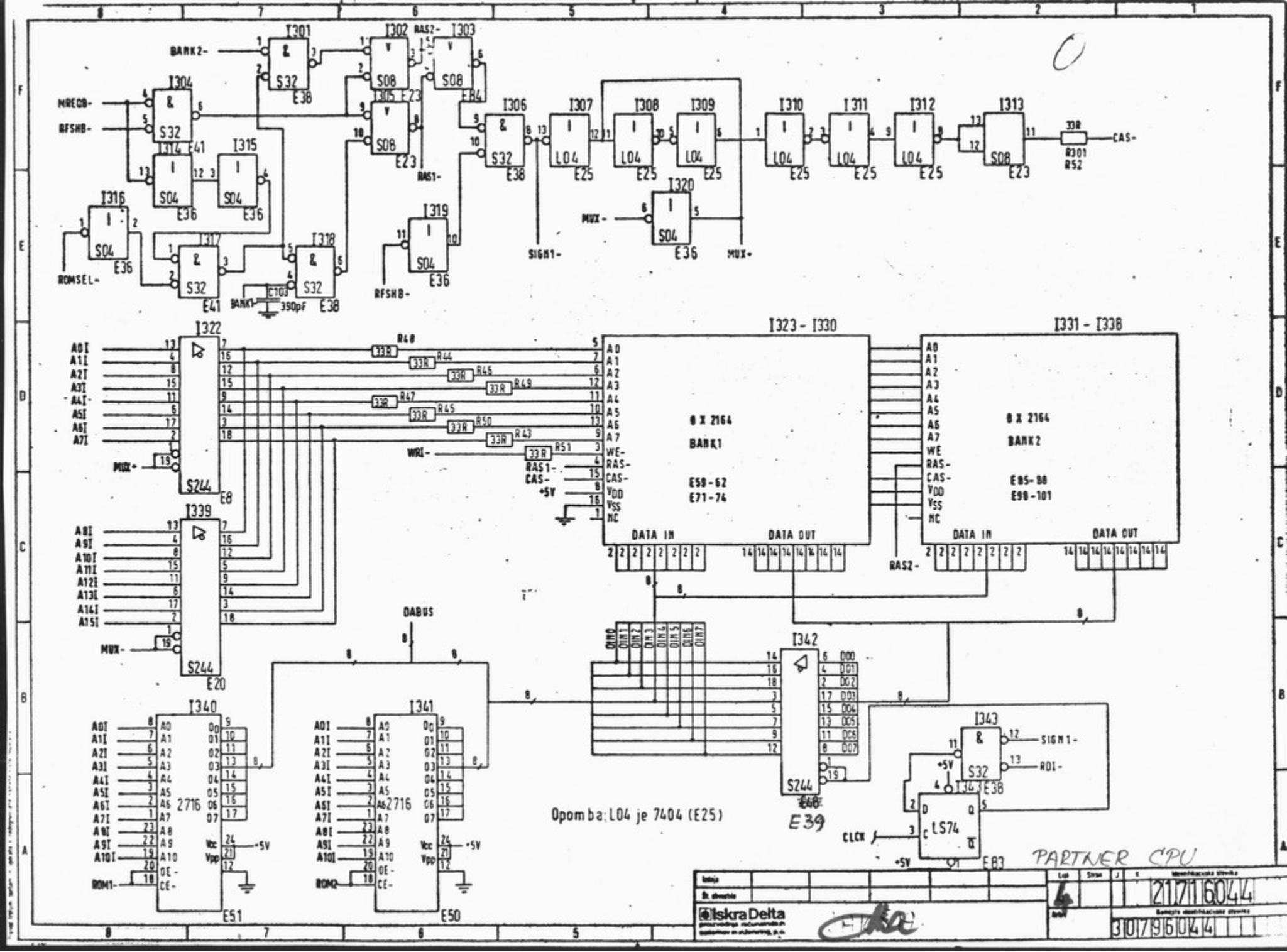

I301
I302
I303
I304
I305
I306
I307
I308
I309
I310
I311
I312
I313
I314
I315
I316
I317
I318
I319
I320
I322
I323 - I330
I331 - I338
I339
I340
I341
I342
I343
BANK2-
RAS2-
MREQB-
RFSHB-
RAS1-
ROMSEL-
BANK1
C103
390pF
SIGN1-
MUX-
MUX+
CAS-
R301
R52
33R
WRI-
RAS1-
CAS-
+5V
0 X 2164
BANK1
E59-62
E71-74
0 X 2164
BANK2
E85-88
E98-101
DATA IN
DATA OUT
RAS2-
DABUS
2716
ROM1-
ROM2
LS74
CLCK
RDI-
Opomba: L04 je 7404 (E25)
PARTNER CPU
Iskra Delta
21716044
30796044

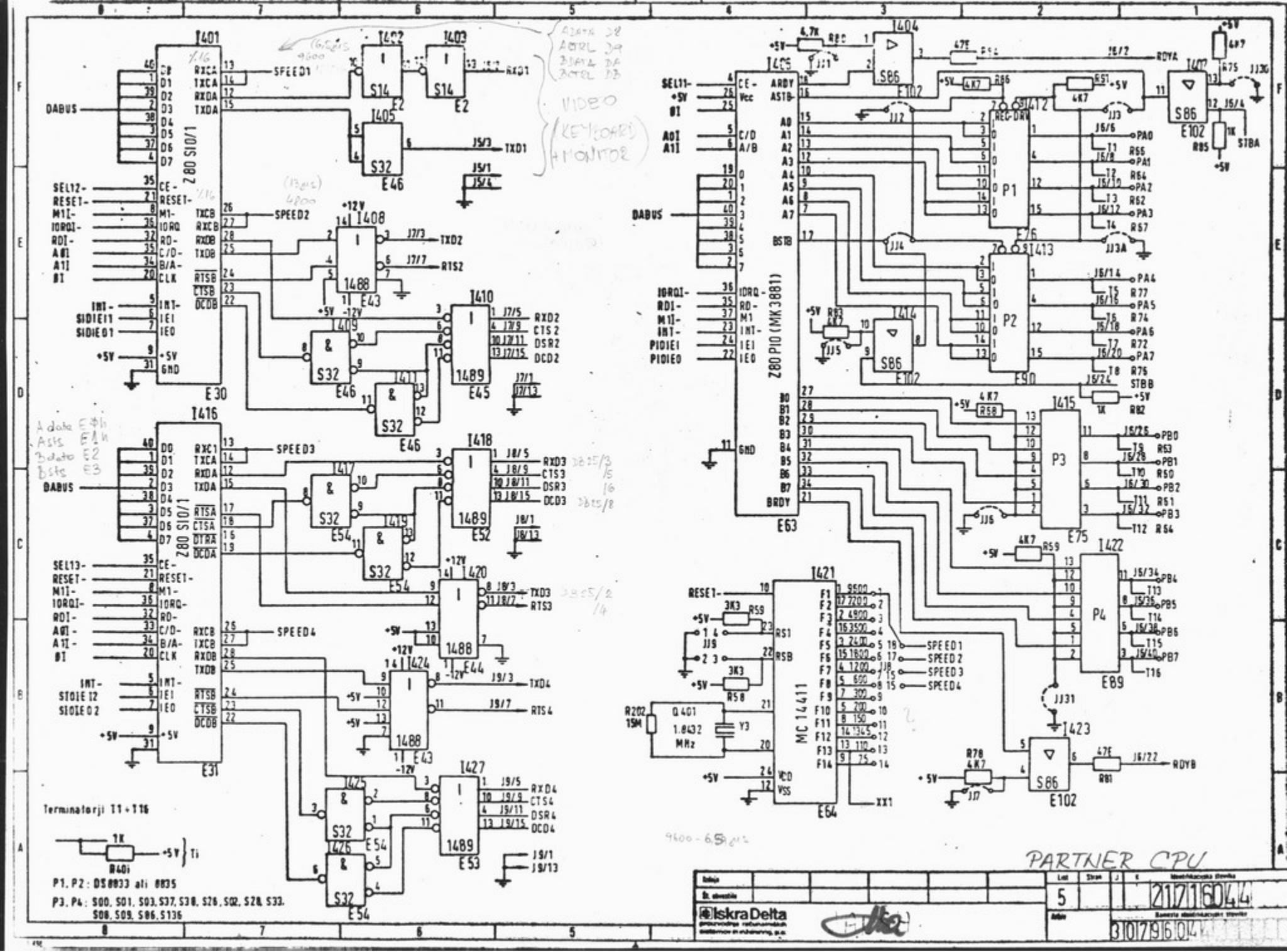

Z80 SIO/1
Z80 PIO (MK3881)
MC 14411
DABUS
SPEED1
SPEED2
SPEED3
SPEED4
RDYA
RDYB
STBA
STBB
Terminatorji T1 + T16
P1, P2: DS8833 ali 8835
P3, P4: S00, S01, S03, S37, S38, S26, S02, S28, S33, S08, S09, S86, S136
PARTNER CPU
Iskra Delta
5
21716044
3079604

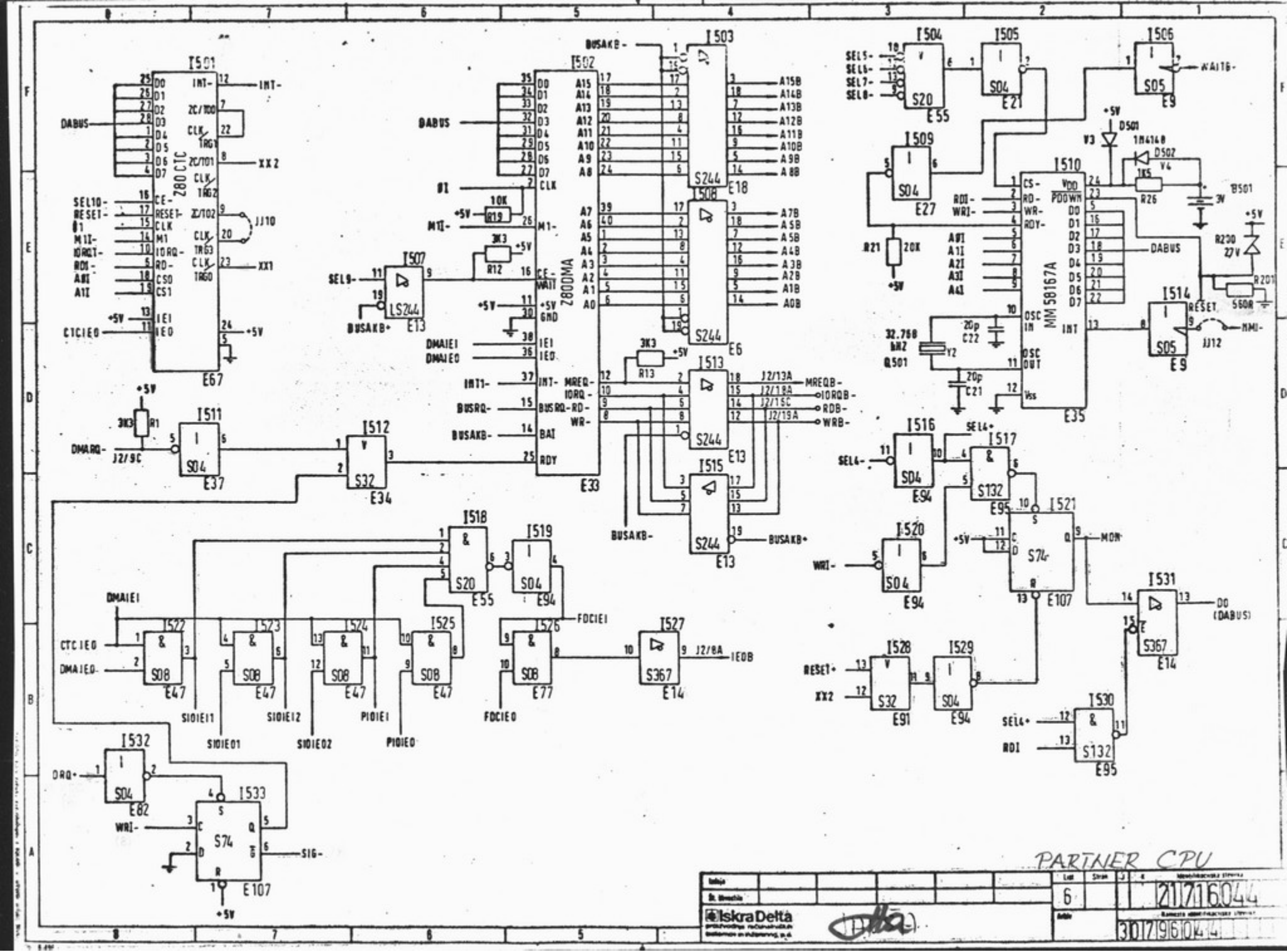

I501
Z80 CTC
E67
I502
Z80DMA
E33
I503
S244
E18
I508
S244
E6
I504
S20
E55
I505
S04
E21
I506
S05
E9
I509
S04
E27
I510
MM58167A
E35
I514
S05
E9
I507
LS244
E13
I511
S04
E37
I512
S32
E34
I513
S244
E13
I515
S244
E13
I516
S04
E94
I517
S132
E95
I520
S04
E94
I521
S74
E107
I518
S20
E55
I519
S04
E94
I522
S08
E47
I523
S08
E47
I524
S08
E47
I525
S08
E47
I526
S08
E77
I527
S367
E14
I528
S32
E91
I529
S04
E94
I530
S132
E95
I531
S367
E14
I532
S04
E82
I533
S74
E107
DABUS
DMARQ-
J2/9C
SEL9-
BUSAKB+
BUSAKB-
MREQB-
IORQB-
RDB-
WRB-
WAITB-
RESET
NMI-
DO (DABUS)
MON
SIG-
PARTNER CPU
Iskra Delta
6
21716044
30796044

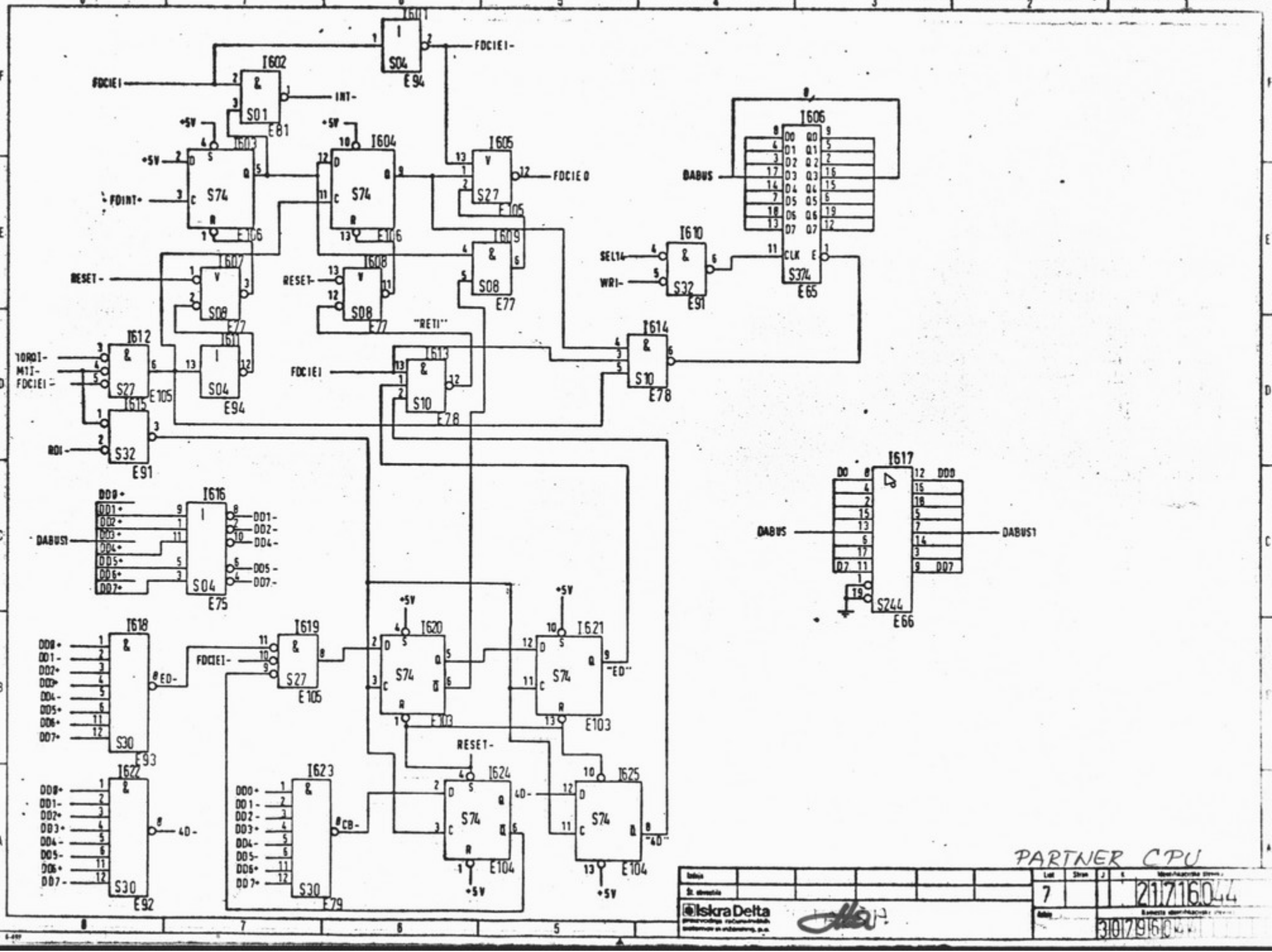

I601
S04
E94
FDCIEI-
I602
S01
E81
FDCIEI
INT-
+5V
I603
S74
E106
FDINT+
I604
S74
E106
I605
S27
E105
FDCIEO
I606
S374
E65
DABUS
I607
S08
E77
RESET-
I608
S08
E77
RESET-
I609
S08
E77
I610
S32
E91
SEL14
WRI-
"RETI"
I612
S27
E105
IORQI-
MTI-
FDCIEI-
I611
S04
E94
I613
S10
E78
FDCIEI
I614
S10
E78
I615
S32
E91
RDI-
I616
S04
E75
DD0+
DD1+
DD2+
DD3+
DD4+
DD5+
DD6+
DD7+
DD1-
DD2-
DD4-
DD5-
DD7-
DABUS1
I617
S244
E66
DABUS
DABUS1
I618
S30
E93
ED-
I619
S27
E105
FDCIEI-
I620
S74
E103
I621
S74
E103
"ED"
RESET-
I622
S30
E92
4D-
I623
S30
E79
CB-
I624
S74
E104
I625
S74
E104
"4D"
PARTNER CPU
Iskra Delta
7
21716044
3079600

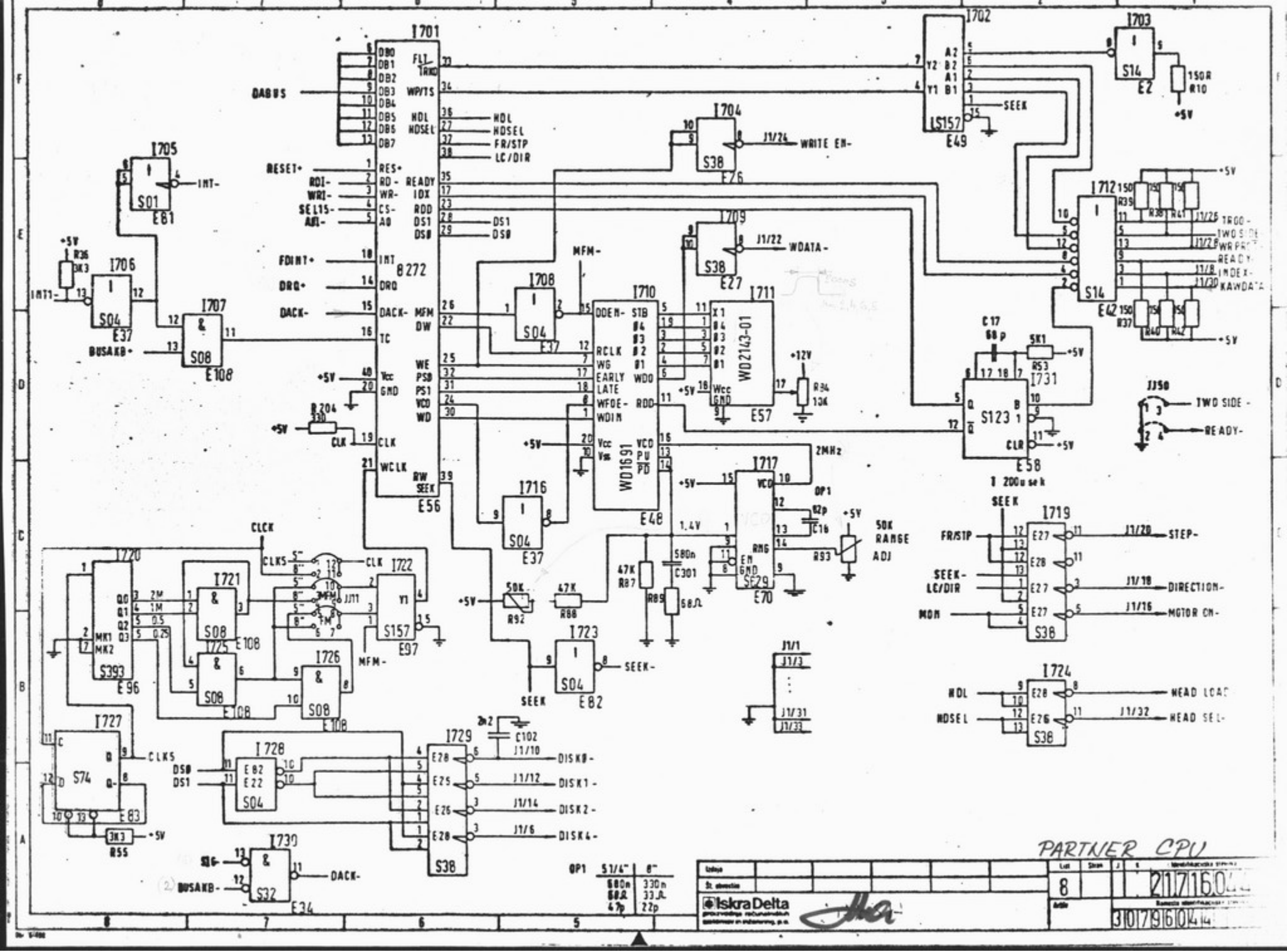

I701
8272
E56
DABUS
RESET+
RDI-
WRI-
SEL15-
A01-
FDINT+
DRQ+
DACK-
HDL
HDSEL
FR/STP
LC/DIR
DS1
DS0
MFM-
I702
LS157
E49
SEEK
I703
S14
E2
150R
R10
+5V
I704
S38
E26
J1/24
WRITE EN-
I705
S01
E81
INT-
I706
S04
E37
INT1-
I707
S08
E108
BUSAKB+
I708
S04
E37
I709
S38
E27
J1/22
WDATA-
I710
WD1691
E48
I711
WD2143-01
E57
+12V
R84
10K
I712
S14
E42
TROO-
TWO SIDE
WR PROT
READY
INDEX-
KAWDATA
I716
S04
E37
I717
SE29
E70
2MHz
OP1
50K
RANGE
ADJ
R93
I719
S38
STEP-
DIRECTION-
MOTOR ON-
I720
S393
E96
I721
S08
E108
I722
S157
E97
I723
S04
E82
SEEK-
I724
S38
HEAD LOAD
HEAD SEL-
I727
S74
E83
CLK5
I728
S04
I729
S38
DISK0-
DISK1-
DISK2-
DISK4-
I730
S32
E34
DACK-
BUSAKB-
OP1
5 1/4"
8"
680n
330n
68Ω
33Ω
47p
22p
PARTNER CPU
Iskra Delta
8

A	J2	Bus C
GND	1	GND
GND	2	GND
-12V	3	-12V
+5V	4	+5V
+5V	5	+5V
+12V	6	+12V
	7	
	8	IEDB
BUSAKB-	9	DMARQ-
	10	
RESETB-	11	
	12	M1B-
MREQB-	13	NMI-
	14	BUSRQ-
INTB-	15	HALTB-
WAITB-	16	RDB-
0B	17	A0B
IORQB-	18	A1B
WRB-	19	A2B
RFSHB-	20	A3B
	21	A4B
DINB-	22	A5B
	23	A6B
	24	A7B
D0B	25	
D1B	26	
D2B	27	
D3B	28	
D4B	29	
D5B	30	
D6B	31	
D7B	32	

J1—za 5 1/4"FD

GND	SIGNAL	NAME
1	2	
3	4	
5	6	DISK3-
7	8	INDEX-
9	10	DISK0-
11	12	DISK1-
13	14	DISK2-
15	16	MOTOR ON-
17	18	DIRECTION-
19	20	STEP-
21	22	WDATA-
23	24	WRITE EN-
25	26	TR00-
27	28	WRPROT-
29	30	RAMDATA-
31	32	HEAD SEL-
33	34	

J4—za 8"FD

GND	SIGNAL	NAME
1	2	
3	4	
5	6	
7	8	
9	10	
11	12	
13	14	
15	16	
17	18	HEAD LOAD
19	20	INDEX-
21	22	READY-
23	24	
25	26	DISK0-
27	28	DISK1-
29	30	DISK2-
31	32	DISK3-
33	34	DIRECTION-
35	36	STEP-
37	38	WDATA-
39	40	WRITE EN-
41	42	TR00-
43	44	WRPROT-
45	46	RAMDATA-
47	48	
49	50	

J3 Reset

1	GND
2	RESIN
3	

J5 TTL—Video

1	GND
2	RXD1
3	TXD1
4	GND
5	

J6—2X paral.port.

GND	SIGNAL	NAME
1	2	RDYA
3	4	STBA
5	6	PA0
7	8	PA1
9	10	PA2
11	12	PA3
13	14	PA4
15	16	PA5
17	18	PA6
19	20	PA7
21	22	RDYB
23	24	STBB
25	26	PB0
27	28	PB1
29	30	PB2
31	32	PB3
33	34	PB4
35	36	PB5
37	38	PB6
39	40	PB7

	Printer J7	asynchr. J8	asynchr. J9
1	GND	GND	GND
3	TXD2	TXD3	TXD4
5	RXD2	RXD3	RXD4
7	RTS2	RTS3	RTS4
9	CTS2	CTS3	CTS4
11	DSR2	DSR3	DSR4
13	GND	GND	GND
15	DCD2	DCD3	DCD4
17			
19			
21			
22			
23			
25			

2,4,6,....,26 N.C.

	J10
1,3	GND
5	-12V
2,4	+5V
6	+12V

PARTNER CPU

List	Strana	J	K	Identifikacijska stevilka
10				21716044

Iskra Delta

Remeste identifikacijske stevilke: 30796044

PARTNER CPU

računalniški sistemi delta