NAME: ISLAM AQEEL AUSHREF

Experiment No. 7

L.L	Cale.		Sim.		Lab.	
	0	**1**	**0**	**1**	**0**	**1**
Vce	2.8v	22.7mv	2.098v	117mv		
Ic	0	0.2v	0	22.193mA		

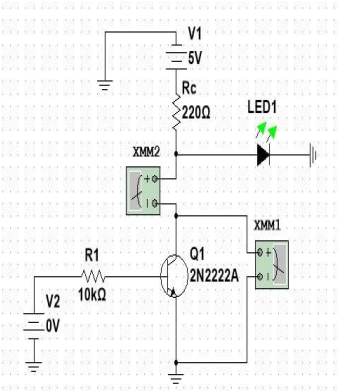

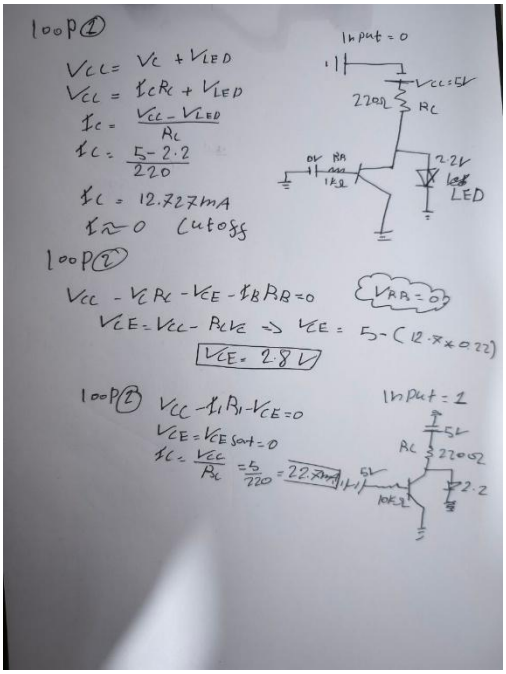

input		LED	
A	B	Sim.	Lab.
0	0	off	
1	0	on	
0	1	on	
1	1	on	

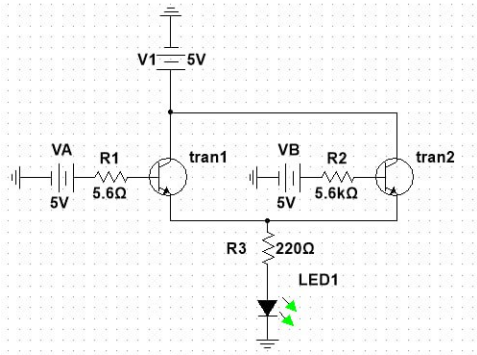

input		LED	
A	B	Sim.	Lab.
0	0	on	
1	0	off	
0	1	off	
1	1	off	

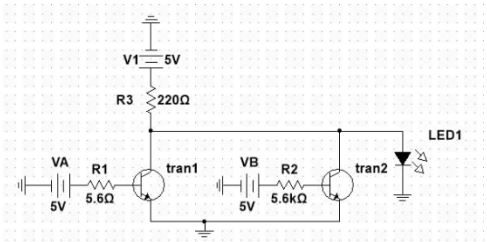

input		LED	
A	B	Sim.	Lab.
0	0	off	
1	0	off	
0	1	off	
1	1	on	

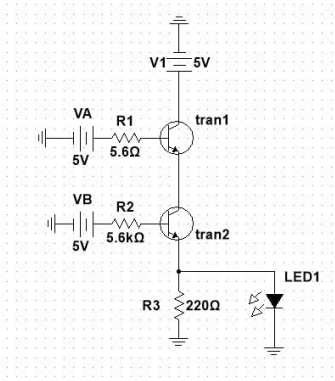
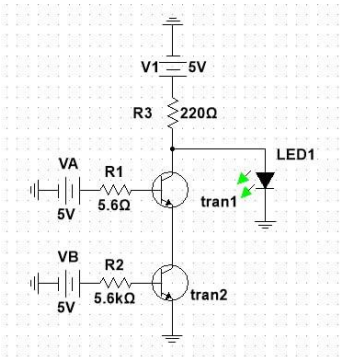
input		LED	
A	B	Sim.	Lab.
0	0	on	
1	0	on	
0	1	on	
1	1	off