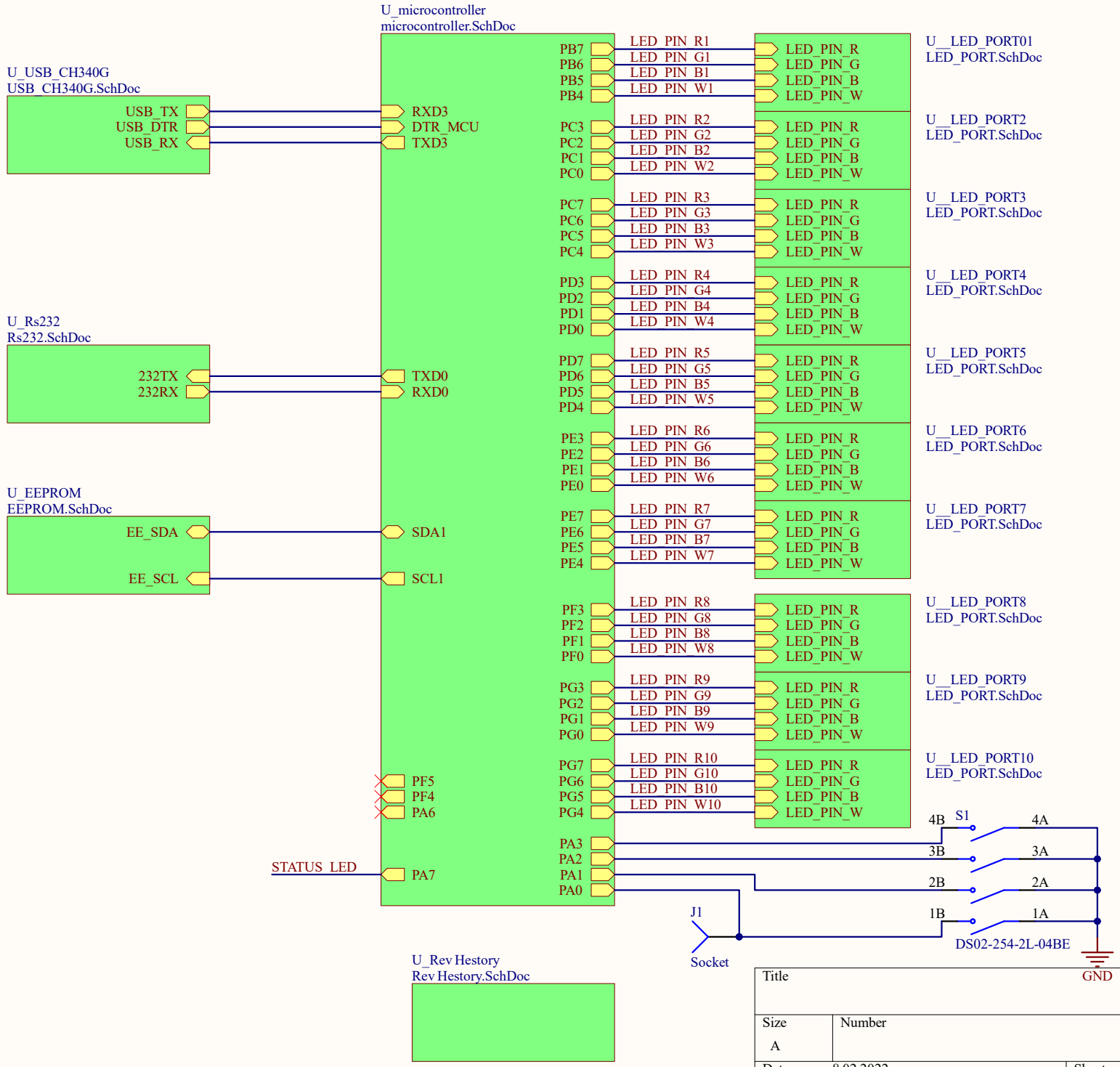
U_microcontroller
microcontroller.SchDoc
U_USB_CH340G
USB_CH340G.SchDoc
USB_TX
USB_DTR
USB_RX
RXD3
DTR_MCU
TXD3
U_Rs232
Rs232.SchDoc
232TX
232RX
TXD0
RXD0
U_EEPROM
EEPROM.SchDoc
EE_SDA
EE_SCL
SDA1
SCL1
PF5
PF4
PA6
STATUS_LED
PA7
PB7 PB6 PB5 PB4
PC3 PC2 PC1 PC0
PC7 PC6 PC5 PC4
PD3 PD2 PD1 PD0
PD7 PD6 PD5 PD4
PE3 PE2 PE1 PE0
PE7 PE6 PE5 PE4
PF3 PF2 PF1 PF0
PG3 PG2 PG1 PG0
PG7 PG6 PG5 PG4
PA3 PA2 PA1 PA0
LED_PIN_R1 LED_PIN_G1 LED_PIN_B1 LED_PIN_W1
LED_PIN_R2 LED_PIN_G2 LED_PIN_B2 LED_PIN_W2
LED_PIN_R3 LED_PIN_G3 LED_PIN_B3 LED_PIN_W3
LED_PIN_R4 LED_PIN_G4 LED_PIN_B4 LED_PIN_W4
LED_PIN_R5 LED_PIN_G5 LED_PIN_B5 LED_PIN_W5
LED_PIN_R6 LED_PIN_G6 LED_PIN_B6 LED_PIN_W6
LED_PIN_R7 LED_PIN_G7 LED_PIN_B7 LED_PIN_W7
LED_PIN_R8 LED_PIN_G8 LED_PIN_B8 LED_PIN_W8
LED_PIN_R9 LED_PIN_G9 LED_PIN_B9 LED_PIN_W9
LED_PIN_R10 LED_PIN_G10 LED_PIN_B10 LED_PIN_W10
LED_PIN_R LED_PIN_G LED_PIN_B LED_PIN_W
U__LED_PORT01
LED_PORT.SchDoc
U__LED_PORT2
LED_PORT.SchDoc
U__LED_PORT3
LED_PORT.SchDoc
U__LED_PORT4
LED_PORT.SchDoc
U__LED_PORT5
LED_PORT.SchDoc
U__LED_PORT6
LED_PORT.SchDoc
U__LED_PORT7
LED_PORT.SchDoc
U__LED_PORT8
LED_PORT.SchDoc
U__LED_PORT9
LED_PORT.SchDoc
U__LED_PORT10
LED_PORT.SchDoc
S1
4B 4A
3B 3A
2B 2A
1B 1A
DS02-254-2L-04BE
J1
Socket
GND
U_Rev Hestory
Rev Hestory.SchDoc
Title
Size
A
Number
Revision
Date: 8 02 2022
Sheet of
File: C:\Users\..\DIY-USB Led Controller.SchDoc
Drawn By: