Class 09

Sunday, June 6, 2021 7:58 PM

Plan A

1) $\phi(n)$
   - Sieve
2) NT problems
3) Big MOD
4) Inv MOD
5) Mat Expo (Basic)

Plan B

1) Mat Expo
2) Inv MOD (Generic)
3) Relevant problems
4) Backtracking

$\phi(n) = k$

$(i = 1 \ldots\ldots n)$

$\gcd(i, n) == 1$

$\phi(10) = 4$

1, 10
3, 10
~~7~~, 10
9, 10
$\rightarrow 1$

$i = 1 \ldots\ldots p$

$\gcd(i, p) = 1$

$\phi(n) =$

$$\boxed{\gcd(i, p) = 1 \quad i < p}$$

$\phi(p)$

$1 \ldots\ldots p-1$

$p = 7$ $\quad \boxed{1, 2, 3, 4, 5, 6}$

n = composite/prime

$\phi(n)$

$\phi(p) = p - 1$

$3(p-1)$

1, 12
2, 12
3, 12

12, 12

1, 9

$\phi(p) = p-1$

$n = 12$

$\phi(3) = 2$

$n = 9 = 3^2$

$\phi(p^3) = p^3\left(\frac{p-1}{p}\right)$

$\phi(p^2) = p^2\left(\frac{p-1}{p}\right)$

$\phi(9) = 3^2 \cdot \left(\frac{3-1}{3}\right)$

$\phi(n) = n\left(\frac{p_1-1}{p_1}\right)\left(\frac{p_2-1}{p_2}\right)\cdots\left(\frac{p_k-1}{p_k}\right)$

2, 12
3, 12
4, 12
5, 12
6, 12
7, 12
8, 12
9, 12
10, 12
11, 12

1, 9
2, 9
3, 9
4, 9
5, 9
6, 9
7, 9
8, 9
9, 9

$= 6$

$n = p_1^{\alpha_1} \times p_2^{\alpha_2} \times p_3^{\alpha_3} \times \cdots\cdots p_k^{\alpha_k}$

$12 = 2^2 \times 3^1$

$\sqrt{n} = 10^{4.5}$

3×10^4

$0 \% \boxed{12} = \boxed{0}$

$12 \% \boxed{12} = \boxed{0}$

$10^4 = \frac{3 \times 10^8}{3 \times 10^4} = T$

$\gcd(0, n) = n$

$T = 10^3$

$F(n) = \left\{ \frac{a}{b} \right\}$

$0 < a < b \leq n$

$\gcd(a, b) = 1$

$F(2) = \{ 1/2 \}$

$F(3) = \{ 1/3, 1/2, 2/3 \}$

$F(5) =$

$F(4) = \left\{ \frac{d}{4} \right\}$

$F(3) = \{1/3, 1/2, 1/3\}$

$F(4) = \{1/4, 3/4, 1/3, 2/3, 1/2\}$

$\phi(4)$

$$\boxed{F(n) = F(n-1) + \phi(n)}$$

$F[2] = 1$

$F[3] = F[2] + \phi(3)$

— o —

BigMOD

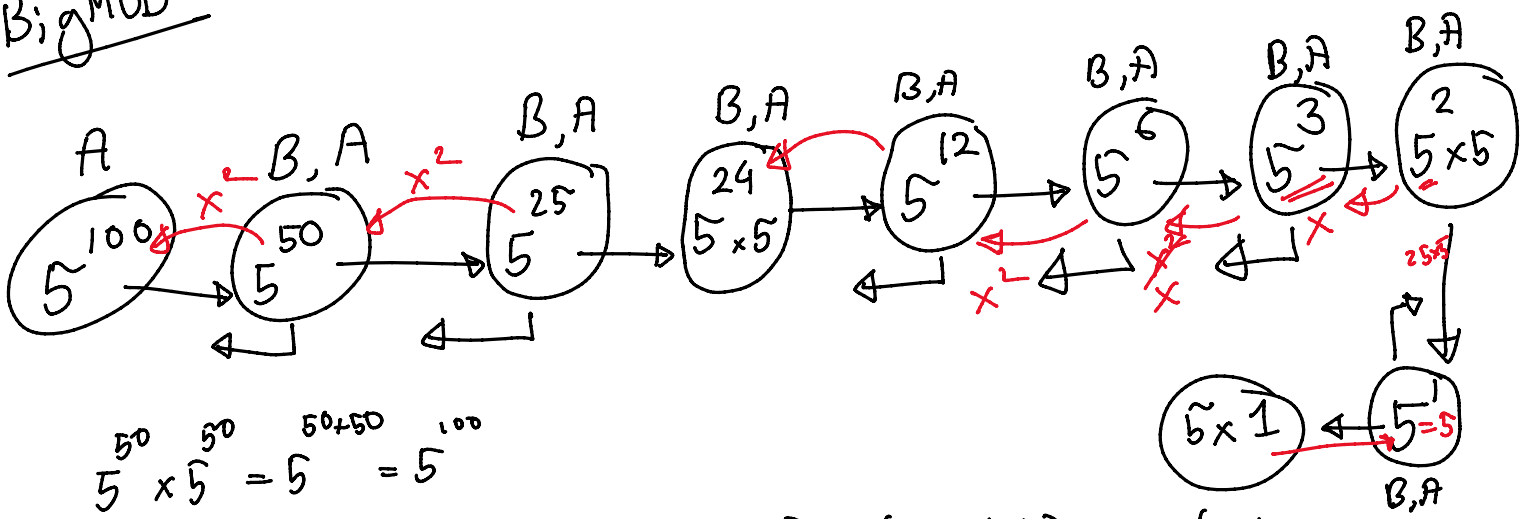

$5^{50} \times 5^{50} = 5^{50+50} = 5^{100}$

$$f(a,b) = \begin{cases} f(a, b/2) \times f(a, b/2) & ; \text{if } b \text{ is even} \\ a \times f(a, b-1) & ; \text{if } b \text{ is odd} \end{cases}$$

$f(5,100) = f(5,50) \times f(5,50)$

— o —

$fib(n)\%M$

$0, 1, 1, 2, 3, 5, 8, \ldots$

$$\boxed{1 \le n \le 10^{18}}$$
$$1 \le T \le 10^5$$

$$f(n) = f(n-1) + f(n-2)$$

$O(n)$

$$\underset{A}{\begin{vmatrix} f(n) \\ f(n-1) \end{vmatrix}} = \underset{B}{\begin{vmatrix} 1 & 1 \\ 1 & 0 \end{vmatrix}} \underset{C}{\begin{vmatrix} f(n-1) \\ f(n-2) \end{vmatrix}} \quad (1)$$

$$\begin{vmatrix} 1 & 1 \\ 1 & 0 \end{vmatrix} \begin{vmatrix} f(n-2) \\ f(n-3) \end{vmatrix}$$

$$f(n-1) = f(n-2) + f(n-3)$$

$$\begin{vmatrix} f(n) \\ f(n-1) \end{vmatrix} = \begin{vmatrix} 1 & 1 \\ 1 & 0 \end{vmatrix} \left(\begin{vmatrix} 1 & 1 \\ 1 & 0 \end{vmatrix} \cdots \right) \begin{vmatrix} f(n-2) \\ f(n-3) \end{vmatrix}$$

$$= \begin{vmatrix} 1 & 1 \\ 1 & 0 \end{vmatrix}^{n-1} \begin{vmatrix} f(1) \\ f(0) \end{vmatrix}$$

$$\boxed{\begin{vmatrix} f(n) \\ f(n-1) \end{vmatrix} = \underbrace{\begin{vmatrix} 1 & 1 \\ 1 & 0 \end{vmatrix}^{n-1}} \begin{vmatrix} b \\ a \end{vmatrix}}$$

$$\boxed{a^b}$$

$$\boxed{8 \times \log_2(n)} \quad k^3 \times \log_2(n)$$

0,	1,	1,	2,	3,	5,	8,	13
0	1	2	3	4	5	6	7

$$f(7) = 13$$

$$f(7) = A^6 \cdot B$$