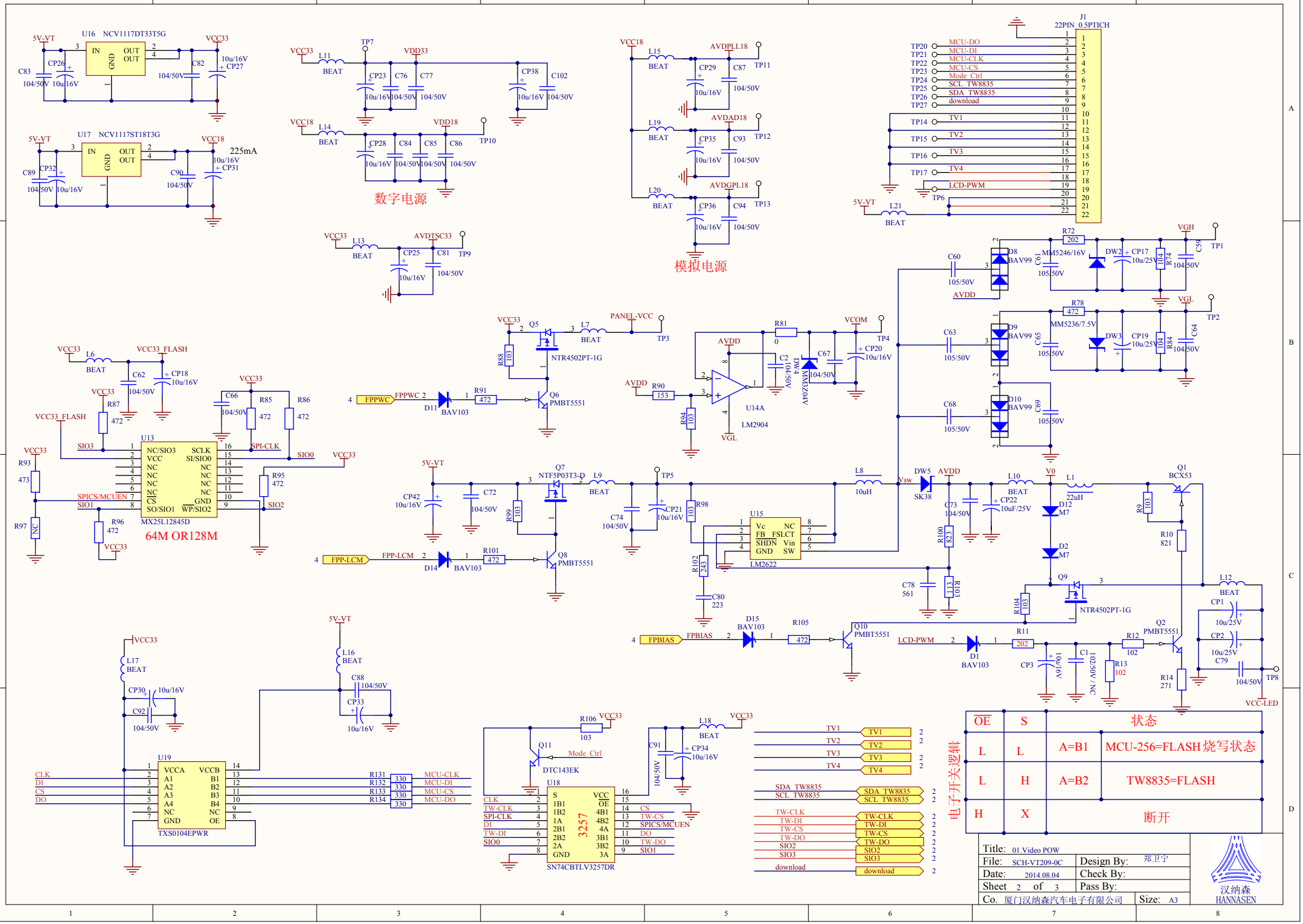
U16 NCV1117DT33T5G
U17 NCV1117ST18T3G
225mA
数字电源
模拟电源
J1 22PIN 0.5PTICH
MCU-DO
MCU-DI
MCU-CLK
MCU-CS
Mode Ctrl
SCL TW8835
SDA TW8835
download
TV1
TV2
TV3
TV4
LCD-PWM
U13 MX25L12845D
64M OR128M
U14A LM2904
U15 LM2622
U18 SN74CBTLV3257DR
3257
U19 TXS0104EPWR
Q11 DTC143EK
FPPWC
FPP-LCM
FPBIAS
PANEL-VCC
VCC-LED
电子开关逻辑
OE S 状态
L L A=B1 MCU-256=FLASH烧写状态
L H A=B2 TW8835=FLASH
H X 断开
Title: 01.Video POW
File: SCH-VT209-0C
Date: 2014.08.04
Sheet 2 of 3
Design By: 郑卫宁
Check By:
Pass By:
Co. 厦门汉纳森汽车电子有限公司
Size: A3
汉纳森 HANNASEN

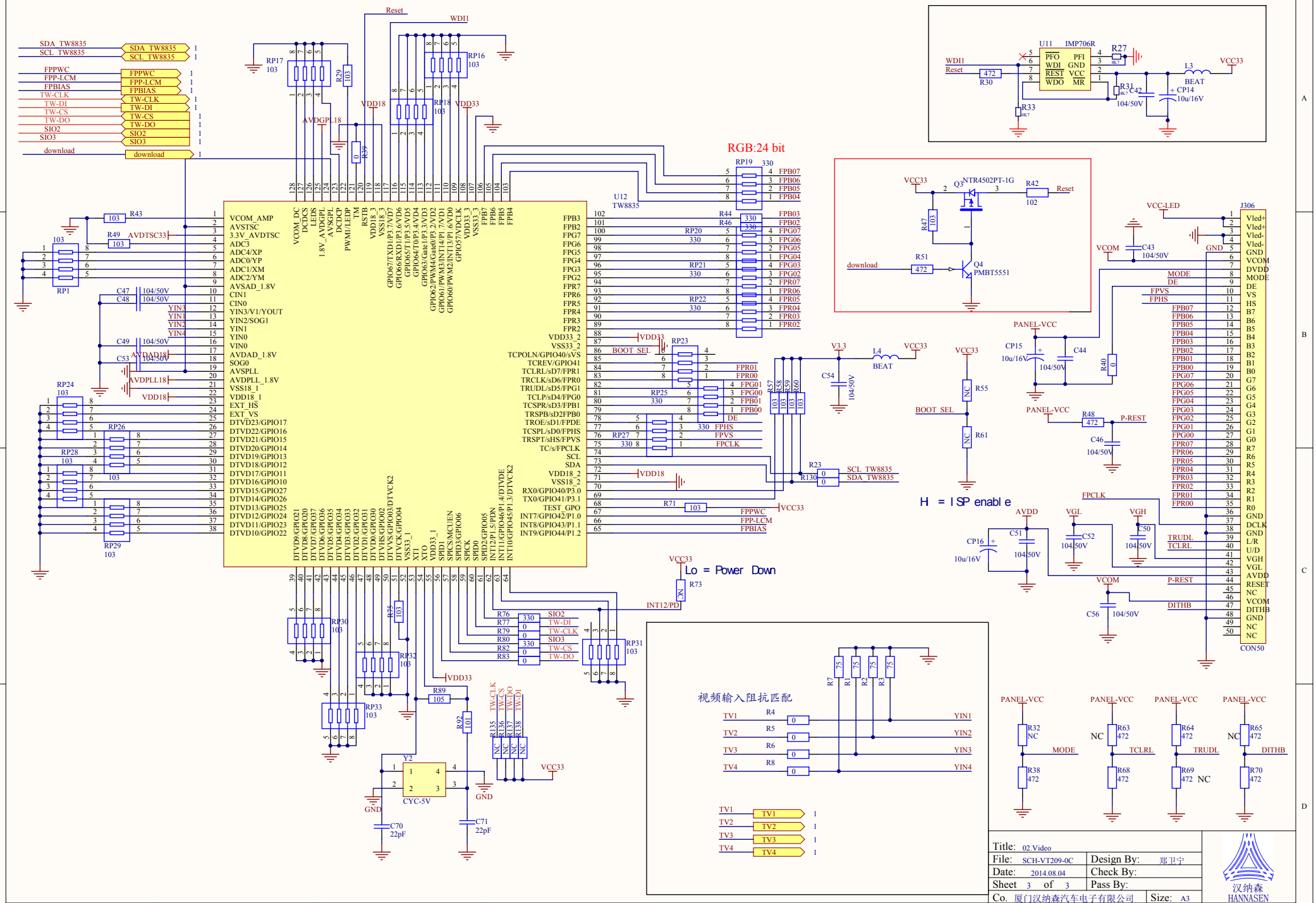
RGB:24 bit
U12
TW8835
U11
IMP706R
Q3
NTR4502PT-1G
Q4
PMBT5551
J306
CON50
H = ISP enable
Lo = Power Down
视频输入阻抗匹配
Y2
CYC-5V
Title: 02.Video
File: SCH-VT209-0C
Date: 2014.08.04
Sheet 3 of 3
Design By: 郑卫宁
Check By:
Pass By:
Co. 厦门汉纳森汽车电子有限公司
Size: A3
汉纳森
HANNASEN