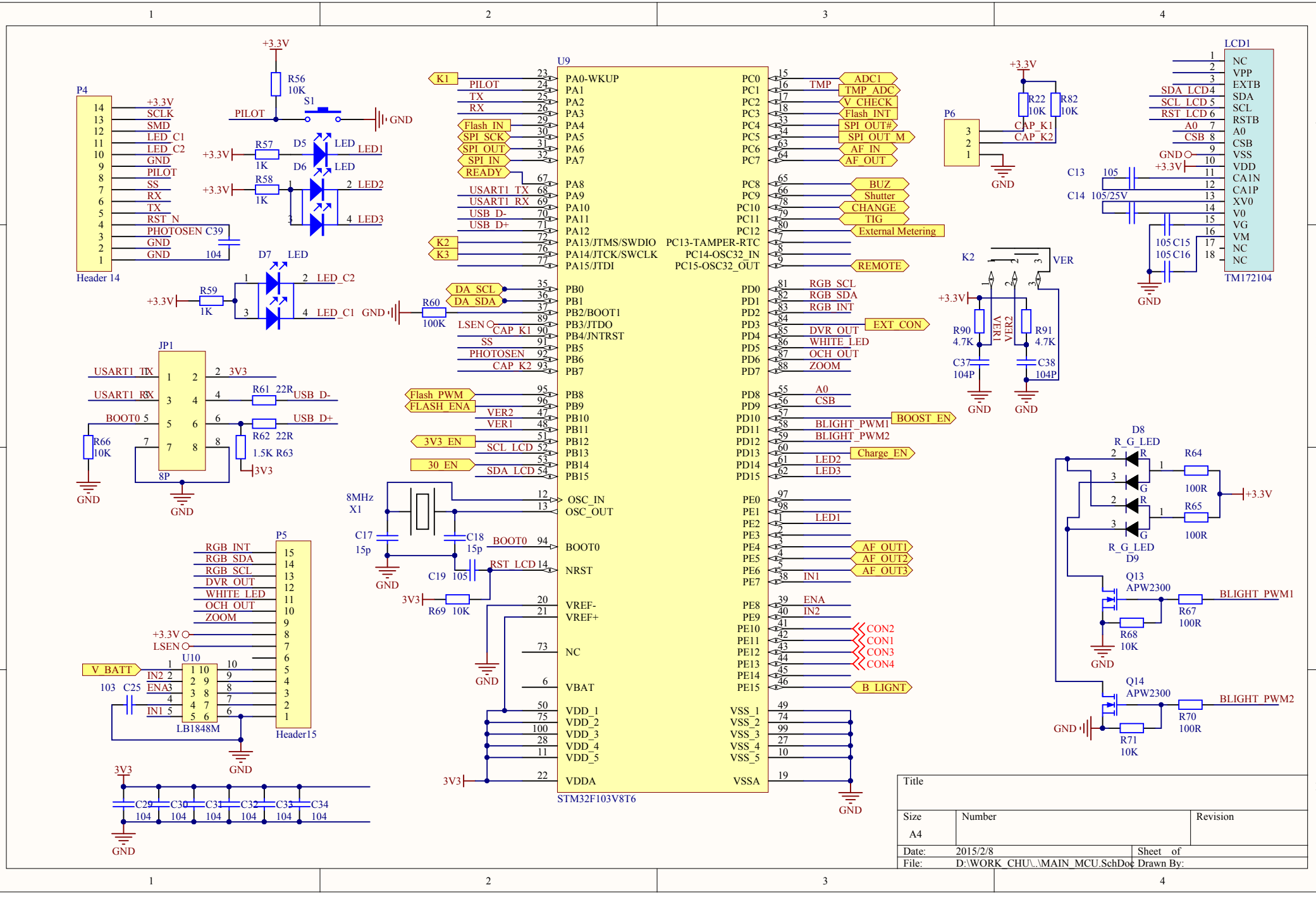
P4
Header 14
+3.3V
SCLK
SMD
LED_C1
LED_C2
GND
PILOT
SS
RX
TX
RST_N
PHOTOSEN C39
GND
GND 104
R56 10K
S1
PILOT
GND
R57 1K
D5 LED
LED1
R58 1K
D6 LED
LED2
LED3
D7 LED
R59 1K
LED_C2
LED_C1
R60 100K
JP1
USART1_TX
USART1_RX
BOOT0
3V3
R61 22R
USB_D-
R62 22R
USB_D+
R66 10K
R63 1.5K
8P
P5
Header15
RGB_INT
RGB_SDA
RGB_SCL
DVR_OUT
WHITE_LED
OCH_OUT
ZOOM
LSEN
V_BATT
U10
LB1848M
IN2
ENA
IN1
C25 103
C29 104
C30 104
C31 104
C32 104
C33 104
C34 104
U9
STM32F103V8T6
PA0-WKUP
PA1
PA2
PA3
PA4
PA5
PA6
PA7
PA8
PA9
PA10
PA11
PA12
PA13/JTMS/SWDIO
PA14/JTCK/SWCLK
PA15/JTDI
PB0
PB1
PB2/BOOT1
PB3/JTDO
PB4/JNTRST
PB5
PB6
PB7
PB8
PB9
PB10
PB11
PB12
PB13
PB14
PB15
OSC_IN
OSC_OUT
BOOT0
NRST
VREF-
VREF+
NC
VBAT
VDD_1
VDD_2
VDD_3
VDD_4
VDD_5
VDDA
PC0
PC1
PC2
PC3
PC4
PC5
PC6
PC7
PC8
PC9
PC10
PC11
PC12
PC13-TAMPER-RTC
PC14-OSC32_IN
PC15-OSC32_OUT
PD0
PD1
PD2
PD3
PD4
PD5
PD6
PD7
PD8
PD9
PD10
PD11
PD12
PD13
PD14
PD15
PE0
PE1
PE2
PE3
PE4
PE5
PE6
PE7
PE8
PE9
PE10
PE11
PE12
PE13
PE14
PE15
VSS_1
VSS_2
VSS_3
VSS_4
VSS_5
VSSA
K1
K2
K3
PILOT
TX
RX
Flash_IN
SPI_SCK
SPI_OUT
SPI_IN
READY
USART1_TX
USART1_RX
USB_D-
USB_D+
DA_SCL
DA_SDA
LSEN
CAP_K1
SS
PHOTOSEN
CAP_K2
Flash_PWM
FLASH_ENA
VER2
VER1
3V3_EN
SCL_LCD
30_EN
SDA_LCD
8MHz X1
C17 15p
C18 15p
C19 105
R69 10K
ADC1
TMP
TMP_ADC
V_CHECK
Flash_INT
SPI_OUT#
SPI_OUT_M
AF_IN
AF_OUT
BUZ
Shutter
CHANGE
TIG
External Metering
REMOTE
RGB_SCL
RGB_SDA
RGB_INT
EXT_CON
DVR_OUT
WHITE_LED
OCH_OUT
ZOOM
A0
CSB
BOOST_EN
BLIGHT_PWM1
BLIGHT_PWM2
Charge_EN
LED2
LED3
LED1
AF_OUT1
AF_OUT2
AF_OUT3
IN1
ENA
IN2
CON2
CON1
CON3
CON4
B_LIGNT
P6
CAP_K1
CAP_K2
R22 10K
R82 10K
LCD1
TM172104
NC
VPP
EXTB
SDA
SCL
RSTB
A0
CSB
VSS
VDD
CA1N
CA1P
XV0
V0
VG
VM
NC
NC
SDA_LCD
SCL_LCD
RST_LCD
C13 105
C14 105/25V
C15 105
C16 105
K2
VER
R90 4.7K
R91 4.7K
C37 104P
C38 104P
D8
R_G_LED
D9
R_G_LED
R64 100R
R65 100R
Q13
APW2300
BLIGHT_PWM1
R67 100R
R68 10K
Q14
APW2300
BLIGHT_PWM2
R70 100R
R71 10K
Title
Size
A4
Number
Revision
Date: 2015/2/8
Sheet of
File: D:\WORK_CHU\..\MAIN_MCU.SchDoc
Drawn By: