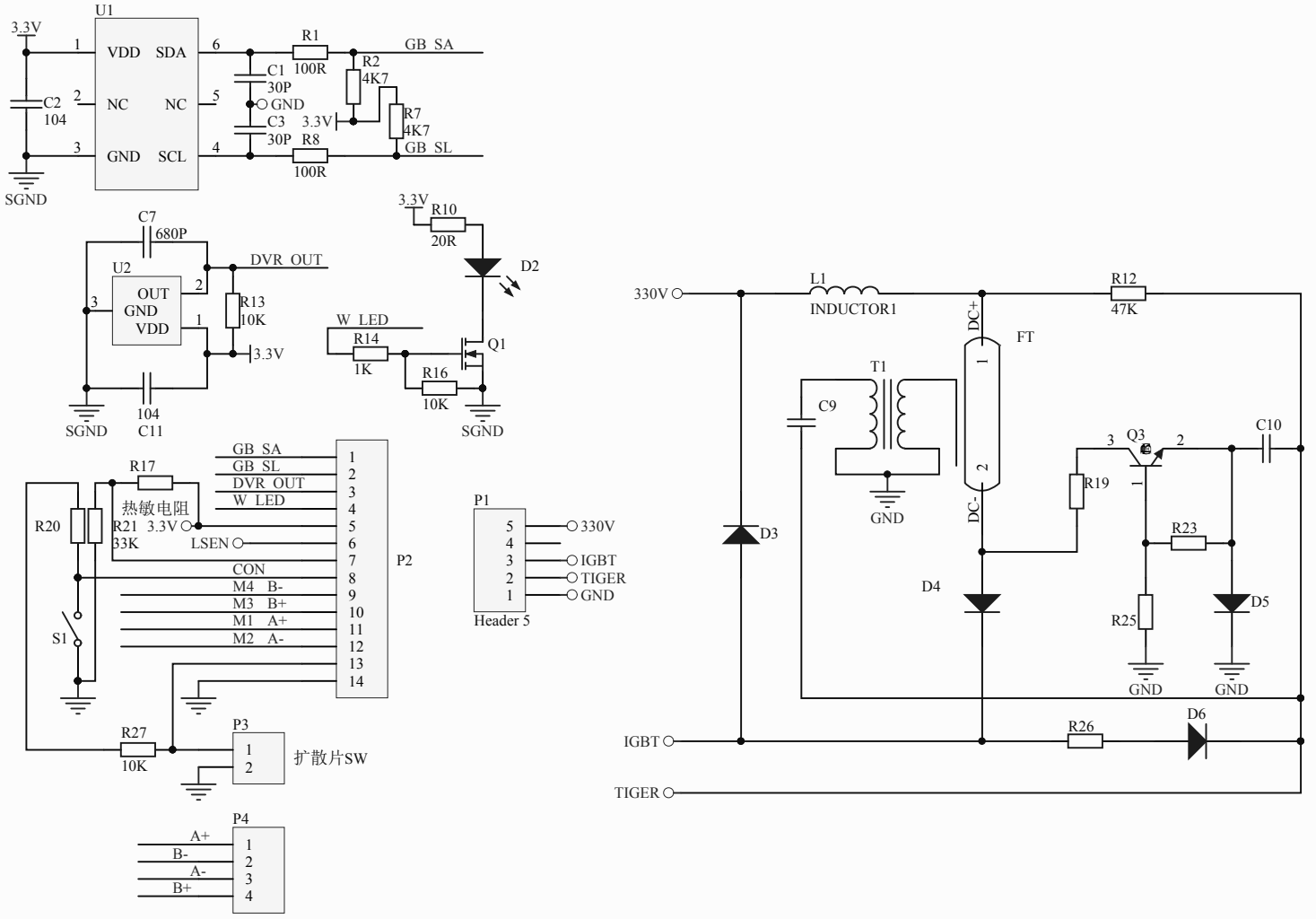

Title		
Size A4	Number	Revision
Date: 2015/1/4		Sheet of
File: C:\Users\..\FLASH.SchDoc		Drawn By: