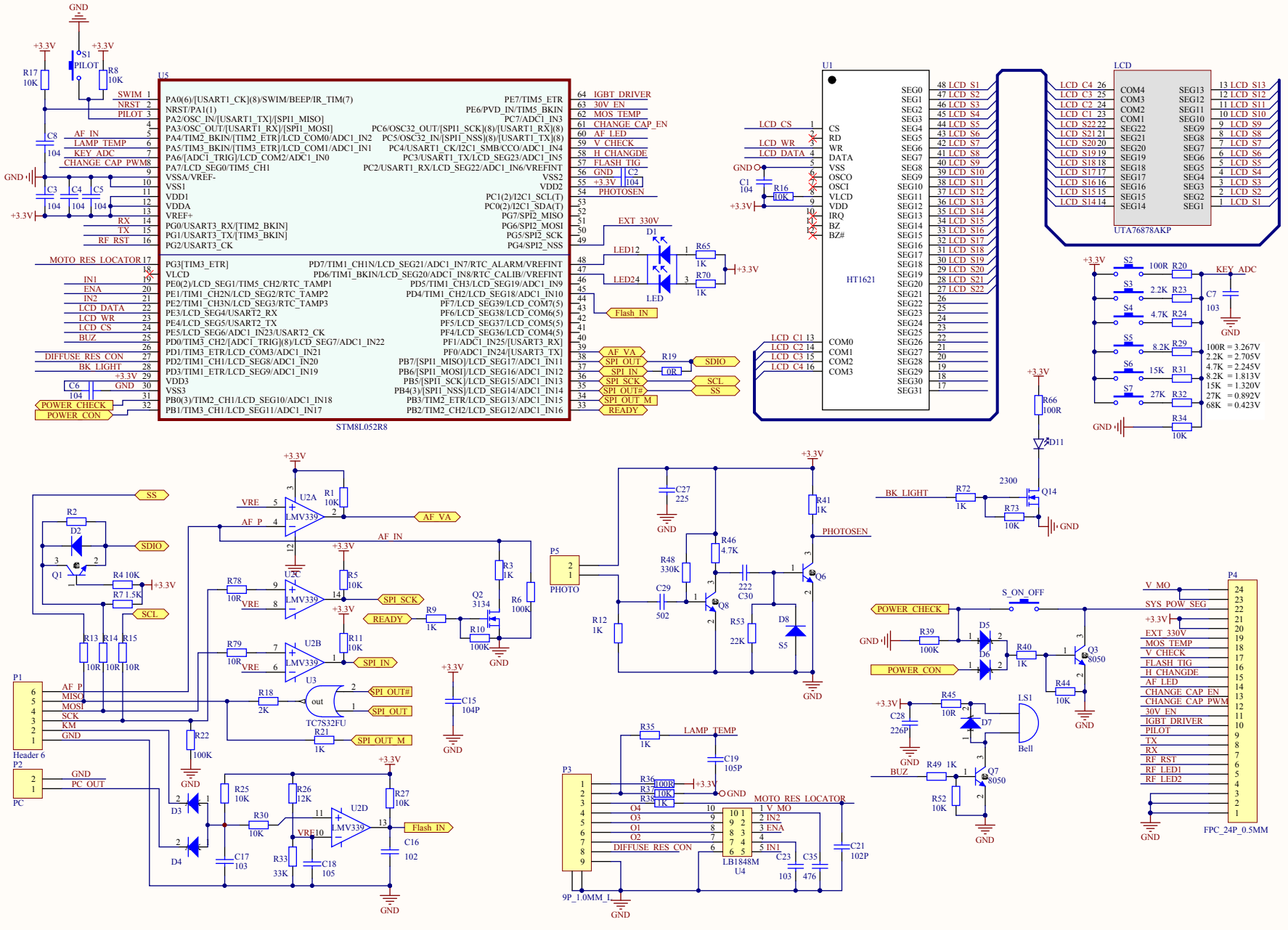
U5
STM8L052R8
PA0(6)/[USART1_CK](8)/SWIM/BEEP/IR_TIM(7)
NRST/PA1(1)
PA2/OSC_IN/[USART1_TX]/[SPI1_MISO]
PA3/OSC_OUT/[USART1_RX]/[SPI1_MOSI]
PA4/TIM2_BKIN/[TIM2_ETR]/LCD_COM0/ADC1_IN2
PA5/TIM3_BKIN/[TIM3_ETR]/LCD_COM1/ADC1_IN1
PA6/[ADC1_TRIG]/LCD_COM2/ADC1_IN0
PA7/LCD_SEG0/TIM5_CH1
VSSA/VREF-
VSS1
VDD1
VDDA
VREF+
PG0/USART3_RX/[TIM2_BKIN]
PG1/USART3_TX/[TIM3_BKIN]
PG2/USART3_CK
PG3[TIM3_ETR]
VLCD
PE0(2)/LCD_SEG1/TIM5_CH2/RTC_TAMP1
PE1/TIM1_CH2N/LCD_SEG2/RTC_TAMP2
PE2/TIM1_CH3N/LCD_SEG3/RTC_TAMP3
PE3/LCD_SEG4/USART2_RX
PE4/LCD_SEG5/USART2_TX
PE5/LCD_SEG6/ADC1_IN23/USART2_CK
PD0/TIM3_CH2/[ADC1_TRIG](8)/LCD_SEG7/ADC1_IN22
PD1/TIM3_ETR/LCD_COM3/ADC1_IN21
PD2/TIM1_CH1/LCD_SEG8/ADC1_IN20
PD3/TIM1_ETR/LCD_SEG9/ADC1_IN19
VDD3
VSS3
PB0(3)/TIM2_CH1/LCD_SEG10/ADC1_IN18
PB1/TIM3_CH1/LCD_SEG11/ADC1_IN17
PE7/TIM5_ETR
PE6/PVD_IN/TIM5_BKIN
PC7/ADC1_IN3
PC6/OSC32_OUT/[SPI1_SCK](8)/[USART1_RX](8)
PC5/OSC32_IN/[SPI1_NSS](8)/[USART1_TX](8)
PC4/USART1_CK/I2C1_SMB/CCO/ADC1_IN4
PC3/USART1_TX/LCD_SEG23/ADC1_IN5
PC2/USART1_RX/LCD_SEG22/ADC1_IN6/VREFINT
VSS2
VDD2
PC1(2)/I2C1_SCL(T)
PC0(2)/I2C1_SDA(T)
PG7/SPI2_MISO
PG6/SPI2_MOSI
PG5/SPI2_SCK
PG4/SPI2_NSS
PD7/TIM1_CH1N/LCD_SEG21/ADC1_IN7/RTC_ALARM/VREFINT
PD6/TIM1_BKIN/LCD_SEG20/ADC1_IN8/RTC_CALIB//VREFINT
PD5/TIM1_CH3/LCD_SEG19/ADC1_IN9
PD4/TIM1_CH2/LCD_SEG18/ADC1_IN10
PF7/LCD_SEG39/LCD_COM7(5)
PF6/LCD_SEG38/LCD_COM6(5)
PF5/LCD_SEG37/LCD_COM5(5)
PF4/LCD_SEG36/LCD_COM4(5)
PF1/ADC1_IN25/[USART3_RX]
PF0/ADC1_IN24/[USART3_TX]
PB7/[SPI1_MISO]/LCD_SEG17/ADC1_IN11
PB6/[SPI1_MOSI]/LCD_SEG16/ADC1_IN12
PB5/[SPI1_SCK]/LCD_SEG15/ADC1_IN13
PB4(3)/[SPI1_NSS]/LCD_SEG14/ADC1_IN14
PB3/TIM2_ETR/LCD_SEG13/ADC1_IN15
PB2/TIM2_CH2/LCD_SEG12/ADC1_IN16
SWIM 1
NRST 2
PILOT 3
AF_IN 5
LAMP_TEMP 6
KEY_ADC 7
CHANGE_CAP_PWM 8
RX 14
TX 15
RF_RST 16
MOTO_RES_LOCATOR 17
IN1 19
ENA 20
IN2 21
LCD_DATA 22
LCD_WR 23
LCD_CS 24
BUZ 25
DIFFUSE_RES_CON 27
BK_LIGHT 28
+3.3V 29
GND 30
POWER_CHECK 32
POWER_CON
64 IGBT_DRIVER
63 30V_EN
62 MOS_TEMP
61 CHANGE_CAP_EN
60 AF_LED
59 V_CHECK
58 H_CHANGDE
57 FLASH_TIG
56 GND
55 +3.3V
54 PHOTOSEN
EXT_330V
LED12
LED24
LED
Flash_IN
AF_VA
SPI_OUT
SPI_IN
SPI_SCK
SPI_OUT#
SPI_OUT_M
READY
SDIO
SCL
SS
U1
HT1621
CS
RD
WR
DATA
VSS
OSCO
OSCI
VLCD
VDD
IRQ
BZ
BZ#
SEG0
SEG1
SEG2
SEG3
SEG4
SEG5
SEG6
SEG7
SEG8
SEG9
SEG10
SEG11
SEG12
SEG13
SEG14
SEG15
SEG16
SEG17
SEG18
SEG19
SEG20
SEG21
SEG22
SEG23
SEG24
SEG25
SEG26
SEG27
SEG28
SEG29
SEG30
SEG31
COM0
COM1
COM2
COM3
LCD_CS
LCD_WR
LCD_DATA
LCD_C1 13
LCD_C2 14
LCD_C3 15
LCD_C4 16
LCD
UTA76878AKP
COM4
COM3
COM2
COM1
SEG13
SEG12
SEG11
SEG10
SEG9
SEG8
SEG7
SEG6
SEG5
SEG4
SEG3
SEG2
SEG1
LCD_C4 26
LCD_C3 25
LCD_C2 24
LCD_C1 23
LCD_S22 22
LCD_S21 21
LCD_S20 20
LCD_S19 19
LCD_S18 18
LCD_S17 17
LCD_S16 16
LCD_S15 15
LCD_S14 14
13 LCD_S13
12 LCD_S12
11 LCD_S11
10 LCD_S10
9 LCD_S9
8 LCD_S8
7 LCD_S7
6 LCD_S6
5 LCD_S5
4 LCD_S4
3 LCD_S3
2 LCD_S2
1 LCD_S1
S2 100R R20
S3 2.2K R23
S4 4.7K R24
S5 8.2K R29
S6 15K R31
S7 27K R32
KEY_ADC
C7 103
100R = 3.267V
2.2K = 2.705V
4.7K = 2.245V
8.2K = 1.813V
15K = 1.320V
27K = 0.892V
68K = 0.423V
R34 10K
R66 100R
D11
Q14
2300
BK_LIGHT
R72 1K
R73 10K
U2A
U2C
U2B
U2D
LMV339
U3
TC7S32FU
out
P1
Header 6
AF_P
MISO
MOSI
SCK
KM
GND
P2
PC
PC_OUT
P5
PHOTO
P3
9P_1.0MM_1
LB1848M
U4
MOTO_RES_LOCATOR
LAMP_TEMP
DIFFUSE_RES_CON
P4
FPC_24P_0.5MM
V_MO
SYS_POW_SEG
EXT_330V
MOS_TEMP
V_CHECK
FLASH_TIG
H_CHANGDE
AF_LED
CHANGE_CAP_EN
CHANGE_CAP_PWM
30V_EN
IGBT_DRIVER
PILOT
TX
RX
RF_RST
RF_LED1
RF_LED2
S_ON_OFF
LS1
Bell
Q2 3134
Q6
Q8
Q3 8050
Q7 8050
D1
D2
D3
D4
D5
D6
D7
D8
S5
Q1
S1
PILOT
R17 10K
R8 10K
C8 104
C3 104
C4 104
C5 104
C6 104
R2
R4 10K
R7 1.5K
R13 10R
R14 10R
R15 10R
R1 10K
R3 1K
R5 10K
R6 100K
R9 1K
R10 100K
R11 10K
R18 2K
R21 1K
R22 100K
R78 10R
R79 10R
R25 10K
R26 12K
R27 10K
R30 10K
R33 33K
C17 103
C18 105
C16 102
C15 104P
C27 225
C29 502
C30 222
R46 4.7K
R48 330K
R12 1K
R41 1K
R53 22K
R35 1K
C19 105P
R36 100R
R37 10K
R38 1K
C1 104
R16 10K
R19 0R
R39 100K
R40 1K
R44 10K
R45 10R
C28 226P
R49 1K
R52 10K
C21 102P
C23 103
C35 476
Title *
Size: A3
Number:*
Revision:*
Date: 2018/4/29
Time: 8:10:12
Sheet* of *
File: C:\Users\c\Desktop\PCB\改版\AC F 1\STM8L052 MAIN.SchDoc
Altium