Control & Assembly of a Power DC Motor

Practical Course ELT10140

Complete Technical Documentation

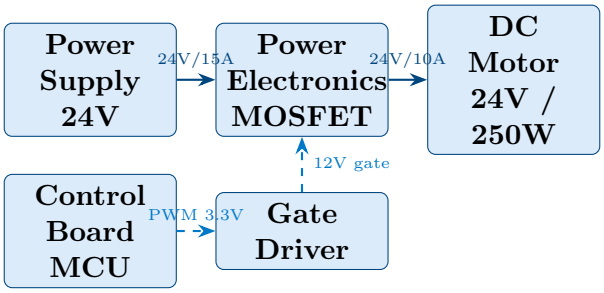

Institution:	WHZ Westsächsische Hochschule Zwickau
Faculty:	Elektrotechnik — EMA-LAB
Supervisor:	Uwe David
Document Date:	March 31, 2026
Version:	1.0

Contents

1 Project Overview **3**
1.1 What is this Project? . . . 3
1.2 Motor Specifications . . . 3

2 Electrical Fundamentals **3**
2.1 The Three Core Quantities . . . 3
2.2 Ohm's Law . . . 4
2.3 Power Formula . . . 4
2.4 Calculating Motor Current . . . 4
2.5 Why 10.4 A is the Minimum, Not the Design Value . . . 4
2.6 Current Rating Rules — Safety Margins . . . 5
2.7 Voltage vs. Current — A Critical Distinction . . . 5

3 System Architecture — The 5 Work Packages **5**
3.1 Two Separate Paths Through the System . . . 6

4 PWM — The Speed Control Principle **6**
4.1 What is PWM? . . . 6
4.2 PWM Examples . . . 7
4.3 Recommended PWM Frequency . . . 7

5 Complete Signal and Power Flow **7**
5.1 Step-by-Step System Operation . . . 7
5.1.1 Step 1 — User Presses ON Button . . . 7
5.1.2 Step 2 — Microcontroller Generates PWM . . . 7
5.1.3 Step 3 — Gate Driver Boosts the Signal . . . 7
5.1.4 Step 4 — MOSFET Switches Power . . . 8
5.1.5 Step 5 — Motor Receives Chopped Voltage . . . 8
5.1.6 Step 6 — Current Returns to Supply (The Loop) . . . 8
5.2 Speed Adjustment Flow . . . 8

6 Protection and Error Handling **9**
6.1 Motor Stall Protection (MANDATORY) . . . 9
6.2 Optional Protection Features . . . 9

7 Component Selection Guide **9**
7.1 Work Package 1 — Control Board . . . 9
7.2 Work Package 2 — Driver Electronics . . . 10
7.3 Work Package 3 — Power Electronics . . . 10
7.4 Work Package 4 — DC Motor . . . 10
7.5 Work Package 5 — Power Supply . . . 11

8 Wiring and Connection Materials **11**

9 Project Timeline and Milestones **12**

10 Documentation Requirements 12

11 Complete Parameter Summary 13

Recommended Software Tools 13

1 Project Overview

1.1 What is this Project?

This project involves designing, building, and testing a complete **Electronic Control System (ECS)** for a 24 V, 250 W brushed DC motor — the type of motor found in entry-level electric scooters. The system is assembled on a wooden board in an open-frame design suitable for laboratory use.

The full development cycle is followed:

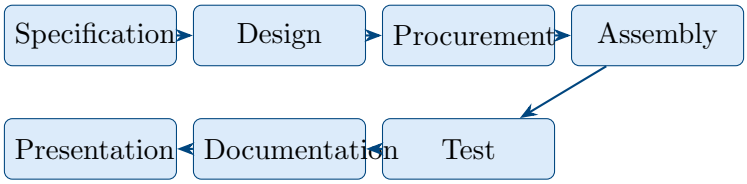

1.2 Motor Specifications

Parameter	Value	Note
Voltage	24 V DC	Safe extra-low voltage
Power	250 W	Real drive, not a toy
Motor Type	Brushed DC	No gearbox required
Application	Electric scooter drive	Real-world component
Direction	Single direction	No reversal required

Table 1: DC Motor Specifications

2 Electrical Fundamentals

2.1 The Three Core Quantities

Before understanding the system, three fundamental electrical quantities must be understood:

Quantity	Symbol / Unit	Physical Meaning	Water Analogy
Voltage	V [Volt]	Electrical pressure driving current	Water pressure in a pipe
Current	I [Ampere]	Flow of electric charge per second	Flow rate of water
Resistance	R [Ohm Ω]	Opposition to current flow	Pipe width / restriction

Table 2: The Three Core Electrical Quantities

2.2 Ohm's Law

Ohm's Law relates voltage, current, and resistance:

$$V = I \times R \quad \Longrightarrow \quad I = \frac{V}{R} \quad \Longrightarrow \quad R = \frac{V}{I} \tag{1}$$

Example: Applying 12 V across a 6 Ω resistor: $I = \dfrac{12\,\mathrm{V}}{6\,\Omega} = 2\,\mathrm{A}$

2.3 Power Formula

Power describes how much energy is consumed per second:

$$P = V \times I \qquad \text{where } P \text{ [Watt]},\ V \text{ [Volt]},\ I \text{ [Ampere]} \tag{2}$$

2.4 Calculating Motor Current

Rearranging the power formula:

$$I = \frac{P}{V} = \frac{250\,\mathrm{W}}{24\,\mathrm{V}} \approx \boxed{10.4\,\mathrm{A}} \tag{3}$$

This is the **nominal running current** of the motor at full load.

2.5 Why 10.4 A is the Minimum, Not the Design Value

Important: The motor does not always draw 10.4 A. Current varies dramatically depending on operating conditions.

Condition	**Approximate Current**	**Risk**
Normal running (full load)	≈ 10.4 A	None
Motor startup (inrush)	30–60 A (momentary)	Supply collapse
Motor stalled (shaft blocked)	50 A+ (continuous)	Burnout — DANGER
No load (free spinning)	< 2 A	None

Table 3: Motor Current Under Different Operating Conditions

2.6 Current Rating Rules — Safety Margins

Because of startup and stall spikes, engineers apply safety margins when selecting components:

$$I_{\text{rated}} \geq 2 \times I_{\text{nominal}} = 2 \times 10.4\,\text{A} = 20.8\,\text{A} \tag{4}$$

Component	Minimum Rating	Reason
Power supply	$\geq 15\,\text{A}$ at $24\,\text{V}$	Handle startup surges
MOSFETs	$\geq 30\,\text{A}$, $\geq 40\,\text{V}$	$3\times$ current margin
Power cables	$\geq 2.5\,\text{mm}^2$	Safe current carrying
Connectors	$\geq 20\,\text{A}$ rated	No contact heating
Fuse	15–20 A	Protects all components
Control wires	$0.25\,\text{mm}^2$	Only milliamps flow

Table 4: Minimum Component Ratings with Safety Margins

2.7 Voltage vs. Current — A Critical Distinction

	Voltage	Current Rating
Must match exactly?	**Yes** — must be 24 V	**No**
Higher value is safe?	**No** — overvoltage damages motor	**Yes** — motor takes only what it needs
Lower value is safe?	**No** — motor won't run properly	**No** — supply overheats

Table 5: Voltage vs Current Rating Rules

Key Principle — Current is pulled, not pushed:

The power supply *offers* a maximum current. The motor *takes* only what it needs. A 15 A supply powering a 10.4 A motor will deliver exactly 10.4 A — the remaining 4.6 A capacity sits unused. This does **not** damage the motor.

3 System Architecture — The 5 Work Packages

The complete control system is divided into **5 work packages**, each with a defined function, interface, and budget.

Work Package	Strategy	Budget	Core Task
Control Board	Buy HW / Develop SW	< 100 €	MCU, buttons, PWM generation
Driver Electronics	Buy or develop	< 100 €	Gate driver, signal boost
Power Electronics	Develop	< 100 €	MOSFET power stage
DC Motor	Buy	< 100 €	24 V / 250 W brushed motor
Power Supply	Given / option buy	< 200 €	24 V DC supply or battery

Table 6: The 5 Work Packages Overview

3.1 Two Separate Paths Through the System

Critical Concept: There are TWO completely separate paths in this system — a high-power path carrying motor current, and a low-power signal path carrying only control signals. These must never be confused.

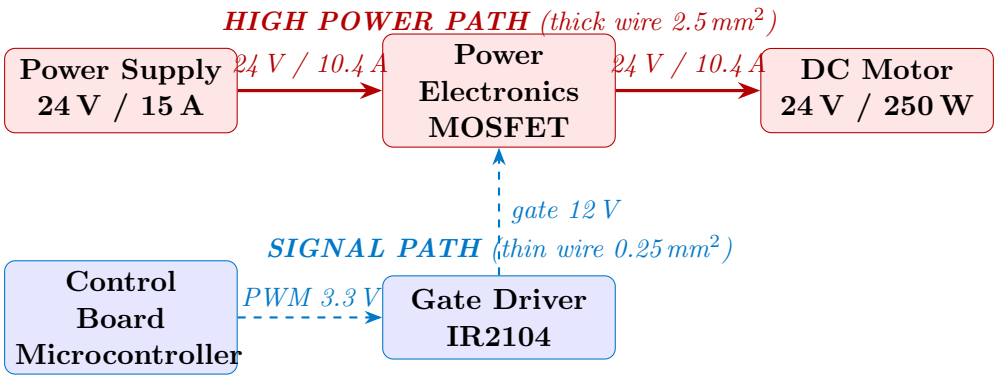

4 PWM — The Speed Control Principle

4.1 What is PWM?

Pulse Width Modulation (PWM) is the technique used to control motor speed. Instead of varying the supply voltage (which is complex and inefficient), the motor voltage is switched ON and OFF thousands of times per second. The ratio of ON time to total cycle time is called the **duty cycle**.

$$\text{Duty Cycle} = \frac{t_{\text{ON}}}{t_{\text{ON}} + t_{\text{OFF}}} \times 100\% \tag{5}$$

$$V_{\text{average}} = \text{Duty Cycle} \times V_{\text{supply}} \tag{6}$$

4.2 PWM Examples

Duty Cycle	Average Voltage	Motor Speed
100%	$1.00 \times 24\,\text{V} = 24.0\,\text{V}$	Full speed
80%	$0.80 \times 24\,\text{V} = 19.2\,\text{V}$	80% speed
50%	$0.50 \times 24\,\text{V} = 12.0\,\text{V}$	50% speed
25%	$0.25 \times 24\,\text{V} = 6.0\,\text{V}$	25% speed
0%	$0.00 \times 24\,\text{V} = 0.0\,\text{V}$	Motor stopped

Table 7: PWM Duty Cycle vs Motor Speed

4.3 Recommended PWM Frequency

A PWM frequency of **10 kHz to 20 kHz** is recommended. This is above the human hearing range (20 Hz–20 kHz), so no audible whine is produced. Higher frequencies also reduce current ripple in the motor.

5 Complete Signal and Power Flow

5.1 Step-by-Step System Operation

5.1.1 Step 1 — User Presses ON Button

The user presses the ON button. This sends a 3.3 V logic signal to a GPIO (General Purpose Input/Output) pin on the microcontroller.

5.1.2 Step 2 — Microcontroller Generates PWM

The microcontroller detects the button press and begins outputting a PWM signal on its PWM output pin. The initial duty cycle (e.g. 20%) determines the starting speed. This signal is a square wave at 3.3 V amplitude.

5.1.3 Step 3 — Gate Driver Boosts the Signal

The PWM signal (3.3 V) arrives at the Gate Driver IC (e.g. IR2104). The gate driver amplifies the signal to 10–12 V. This higher voltage is required to fully switch the MOSFET.

Why is boosting necessary?
A MOSFET requires $V_{GS} \geq 10\,\text{V}$ to enter full conduction (fully ON). If only 3.3 V is applied to the gate, the MOSFET partially conducts — it behaves like a resistor, wastes enormous power as heat, and will burn out.

5.1.4 Step 4 — MOSFET Switches Power

The MOSFET (e.g. IRFZ44N) receives the 12 V gate signal and switches between fully ON and fully OFF states, thousands of times per second, following the PWM pattern. When ON, the full 24 V passes from Drain to Source toward the motor.

The MOSFET has three terminals:

Terminal	Connected To	Function
Gate (G)	Gate Driver output	Control input — switches the MOSFET
Drain (D)	Power supply (+24 V)	High-voltage power input
Source (S)	Motor (then GND)	Switched power output

Table 8: MOSFET Terminal Functions

5.1.5 Step 5 — Motor Receives Chopped Voltage

The motor receives the chopped 24 V pulses. Due to the motor's internal inductance, it smooths out the pulses and effectively sees the average voltage. The motor spins at a speed proportional to this average voltage.

5.1.6 Step 6 — Current Returns to Supply (The Loop)

Current flows from the power supply, through the MOSFET, through the motor, and back to the power supply via the ground (GND) wire. **Current always flows in a closed loop.**

5.2 Speed Adjustment Flow

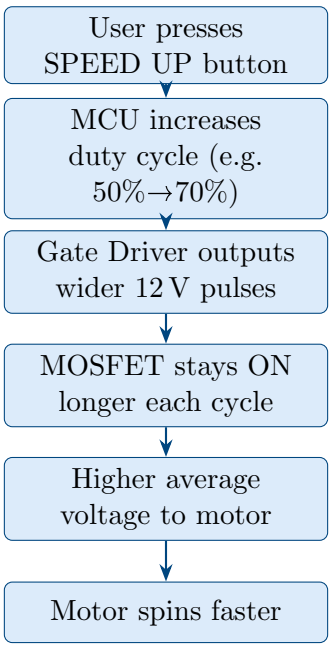

6 Protection and Error Handling

6.1 Motor Stall Protection (MANDATORY)

This protection is mandatory per project requirements. Failure to implement stall protection risks permanent damage to the motor and power electronics.

When the motor shaft is mechanically blocked, the back-EMF (counter-voltage generated by the spinning motor) drops to zero. The motor behaves like a short circuit, drawing current limited only by the winding resistance — typically 50 A or more.

Detection method: A shunt resistor ($R_{\text{shunt}} \approx 0.01\,\Omega$) is placed in series with the motor. The voltage across it is measured by the microcontroller ADC:

$$V_{\text{shunt}} = I_{\text{motor}} \times R_{\text{shunt}} \quad \Longrightarrow \quad I_{\text{motor}} = \frac{V_{\text{shunt}}}{R_{\text{shunt}}} \tag{7}$$

Protection flow:

1. Current sensor reads current continuously
2. If $I > I_{\text{threshold}}$ (e.g. 20 A) → **FAULT detected**
3. Microcontroller immediately sets PWM duty cycle to 0%
4. MOSFET turns OFF → no current flows → no damage
5. System monitors current
6. When current returns to normal → system resumes automatically

6.2 Optional Protection Features

Protection	Required?	Notes
Motor stall / overcurrent	**Mandatory**	Must not cause damage
Over-temperature	Optional	Implement only if damage risk
Over-voltage	Optional	Implement only if damage risk
Under-voltage	Optional	Implement only if damage risk
Optical indicators (LEDs)	Optional	Status feedback recommended

Table 9: Protection Features — Requirements

7 Component Selection Guide

7.1 Work Package 1 — Control Board

The microcontroller is the brain of the system. Recommended options:

Board	Voltage	PWM	ADC	Approx. Cost
Arduino Mega 2560	5 V / 3.3 V	Yes	10-bit	∼€10–20
STM32 Nucleo-F401	3.3 V	Yes	12-bit	∼€15–25
Arduino Uno	5 V	Yes	10-bit	∼€5–15

Table 10: Recommended Microcontroller Boards

7.2 Work Package 2 — Driver Electronics

Component	Example Part	Key Specs	Note
Gate Driver IC	IR2104	Bootstrap, 600 V	Half-bridge driver
Gate Driver IC	IRS2004	Bootstrap, 600 V	Alternative
Gate resistor	10 Ω	0.25 W	Limits gate switching speed

Table 11: Driver Electronics Components

7.3 Work Package 3 — Power Electronics

Component	Example	V_{DS}	I_D	Note
N-Channel MOSFET	IRFZ44N	55 V	49 A	Very common, cheap
N-Channel MOSFET	IRF3205	55 V	110 A	Higher current margin
Flyback diode	1N5822	40 V	3 A	Protects against inductive spikes
Heatsink	TO-220	—	—	Required for MOSFET

Table 12: Power Electronics Components

MOSFET Selection Criteria:

- $V_{DS} \geq 40\,\text{V}$ (24 V supply + safety margin)
- $I_D \geq 30\,\text{A}$ (10.4 A × 3 safety margin)
- Low $R_{DS(\text{on})}$ (reduces conduction losses and heat)

7.4 Work Package 4 — DC Motor

Parameter	Required Specification
Voltage	24 V DC
Power	250 W
Type	Brushed DC
Direction	Single direction (no reversal needed)
Maximum price	< 100 €

Table 13: DC Motor Requirements

7.5 Work Package 5 — Power Supply

Option	Specifications	Cost
Lab power supply (given)	24 V, specify current min/max	Given
Battery pack (optional)	24 V, > 15 Ah recommended	< 100 €
Battery charger	Matching charger for battery	< 100 €

Table 14: Power Supply Options

8 Wiring and Connection Materials

Component	Specification	Reason
Power cables	$\geq 2.5\,\mathrm{mm}^2$, red/black	Carries 10.4 A+ safely
Control wires	$0.25\,\mathrm{mm}^2$, various colors	Milliamp signals only
Power connectors	XT60 (battery), rated ≥ 20 A	Handles full motor current
Screw terminals	5.08 mm pitch, ≥ 15 A	Board connections
Test sockets	4 mm banana, red/black	Lab measurement points
Cable ties	Nylon, assorted	Cable management
Fuse + holder	15–20 A, inline	Overcurrent protection

Table 15: Required Connection Materials

9 Project Timeline and Milestones

Date	Milestone
26.03.2026	**Kick-Off** — Project start
02.04.2026	**Block Diagram** — Complete system block diagram with all signal/power interfaces. Specify wooden board dimensions.
16.04.2026	**Presentation 1** — Present two work packages
30.04.2026	**Presentation 2** — Present two more work packages
07.05.2026	**Presentation 3** — Present final work package + connection materials plan
21.05.2026	**Final BOM** — Complete Bill of Materials with prices and delivery times
28.05.2026	**PCB Layout & Software** — Both completed
04.06.2026	**Draft Report**
11.06.2026	**Final Report**
25.06.2026	**Final Presentation** — Live demo of working prototype

Table 16: Project Milestones

Most urgent task: The **Block Diagram is due 02.04.2026** — this is the foundation of the entire project. All component ordering and work package division depends on it. **Do this first!**

10 Documentation Requirements

Document	Content
Block Diagram	Complete system with all inputs/outputs, voltages, and currents labeled
Circuit Diagrams	Full electrical schematics for each work package, clearly labeled
Bill of Materials (BOM)	Every component: type, supplier, price, delivery time
Functional Description	Precise explanation of how each block works
Datasheet	Product-level datasheet for the complete assembly
Software Documentation	Code comments, flowcharts, state machine diagrams
Final Report	Complete technical documentation — professional quality
Presentation	Oral presentation with live working prototype demonstration

Table 17: Required Documentation

11 Complete Parameter Summary

Parameter	Value	Derivation / Reason
Motor voltage	24 V	Fixed by motor specification
Normal current	10.4 A	$P \div V = 250 \div 24$
Startup current	30–60 A	Momentary inrush spike
Stall current	50 A+	Dangerous — mandatory protection
Supply current rating	$\geq$ 15 A	Handles startup + margin
MOSFET V_{DS} rating	$\geq$ 40 V	24 V + 67% safety margin
MOSFET I_D rating	$\geq$ 30 A	10.4 A $\times$ 3 margin
Power cable size	$\geq$ 2.5 mm^2	Safe for 10.4 A continuous
Control wire size	0.25 mm^2	Only milliamps
PWM frequency	10–20 kHz	Above audible range
Gate drive voltage	10–12 V	Required to fully switch MOSFET
MCU output voltage	3.3 V	Standard MCU logic level
Stall current threshold	$\approx$ 20 A	Trigger protection at 2$\times$ nominal

Table 18: Complete System Parameter Summary

Recommended Software Tools

Purpose	Tool	Cost
PCB Layout	KiCad	Free / Open Source
PCB Layout (alt)	Altium Designer	Professional license
MCU Programming	Arduino IDE	Free
MCU Programming	STM32CubeIDE	Free
Circuit Simulation	LTspice	Free
Documentation	LaTeX	Free

Table 19: Recommended Software Tools