REACH & RoHS COMPLIANT

REV.	ECN / DESCRIPTION	BY	DATE
A0	NEW	Sunny.Xu	2018.05.09

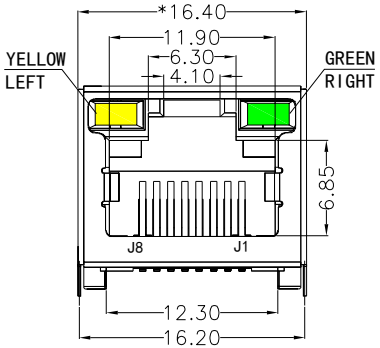

FRONT VIEW

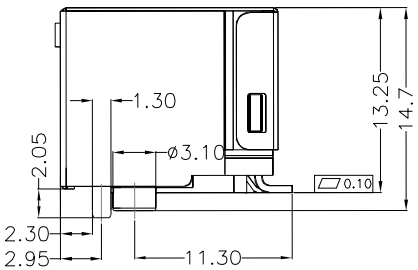

RIGHT SIDE VIEW

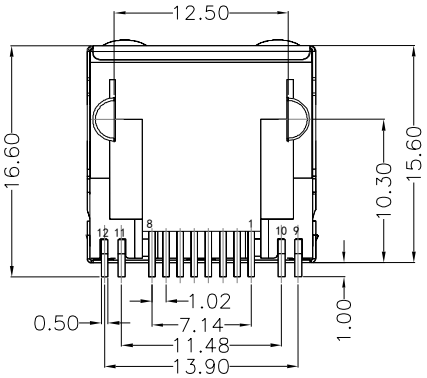

BOTTOM VIEW

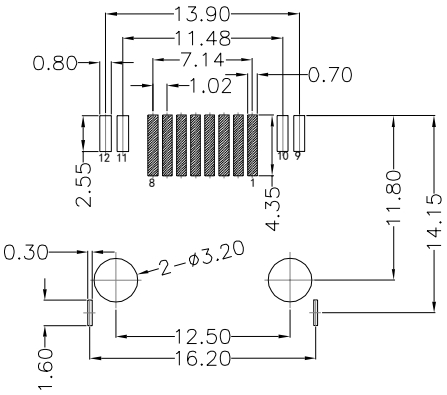

RECOMMENDED PCB LAYOUT
VIEWED FROM COMPONENT SIDE

MATERIAL:
HOUSING: LCP,UL94V-0,BLACK.
TERMINAL: PHOSPHOR BRONZE T=0.30MM,
1U" GOLD PLATING ON CONTACT AREA.
SHIELD: C2680,T=0.20MM,20 MIN NICKEL PLATING
ON ALL AREA.

MACHANICAL:
DURABILITY: 750 CYCLES MIN,12.5MM/MINUTE.
INSERTION FORCE: 2.2KG.F MAX.
RETENTION STRENGTH : 7.7KG.F BETWEEN JACK AND PLUG.
OPERATING TEMPERATURE: -40℃～+85℃.
STORAGE TEMPERATURE: -40°C~+85°C.
ALL CRITICAL DIMENSIONS WITH "*"

ELECTRICAL:
VOLTAGE: 125 VOLTS AC.
CURRENT RATING : 1.5AMP.
DIELECTRIC STRENGTH: 1000 VAC RMS 50HZ OR 60HZ,1MIN.
INSULATION RESISTANCE: 500 MEGA OHMS MIN. INITIAL
AFTER 500V DC FOR 1 MINUTE.
CONTACT RESISTANCE: SINGLE TERMINAL 30 MILLIOHMS MAX.
INITIAL 50 MILLIOHMS MAX. AFTER
DURABILITY TEST.

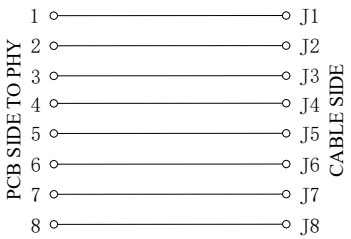

LED Specification

Standard LED Color	LED Wavelength	Foward(A)	Foward(V)
Green	568nm	20mA	1.85-2.45V
Yellow	585nm	20mA	1.7-2.2V

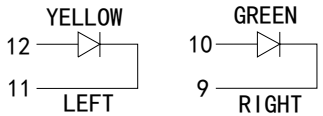

TITLE: RJ45 SMT 56带屏蔽带灯	SIZE A4	UNITS MM[INCH]	GENERAL TOLERANCES UNLESS SPECIFIED		APPROVED BY: Geoffrey.Song
PART NO.: SYT561188AB1A6SB9T5133	SACLE 1:1	REV A0	x±0.35	x°±3.0°	CHECKED BY: Elvis.Song
			.x±0.30	.x°±2.0°	
REMARK:	SHEET 1/1		.xx±0.25	.xx°±1.5°	DESIGND BY: Sunny.Xu
			.xxx±0.10	.xxx°±1.0°	