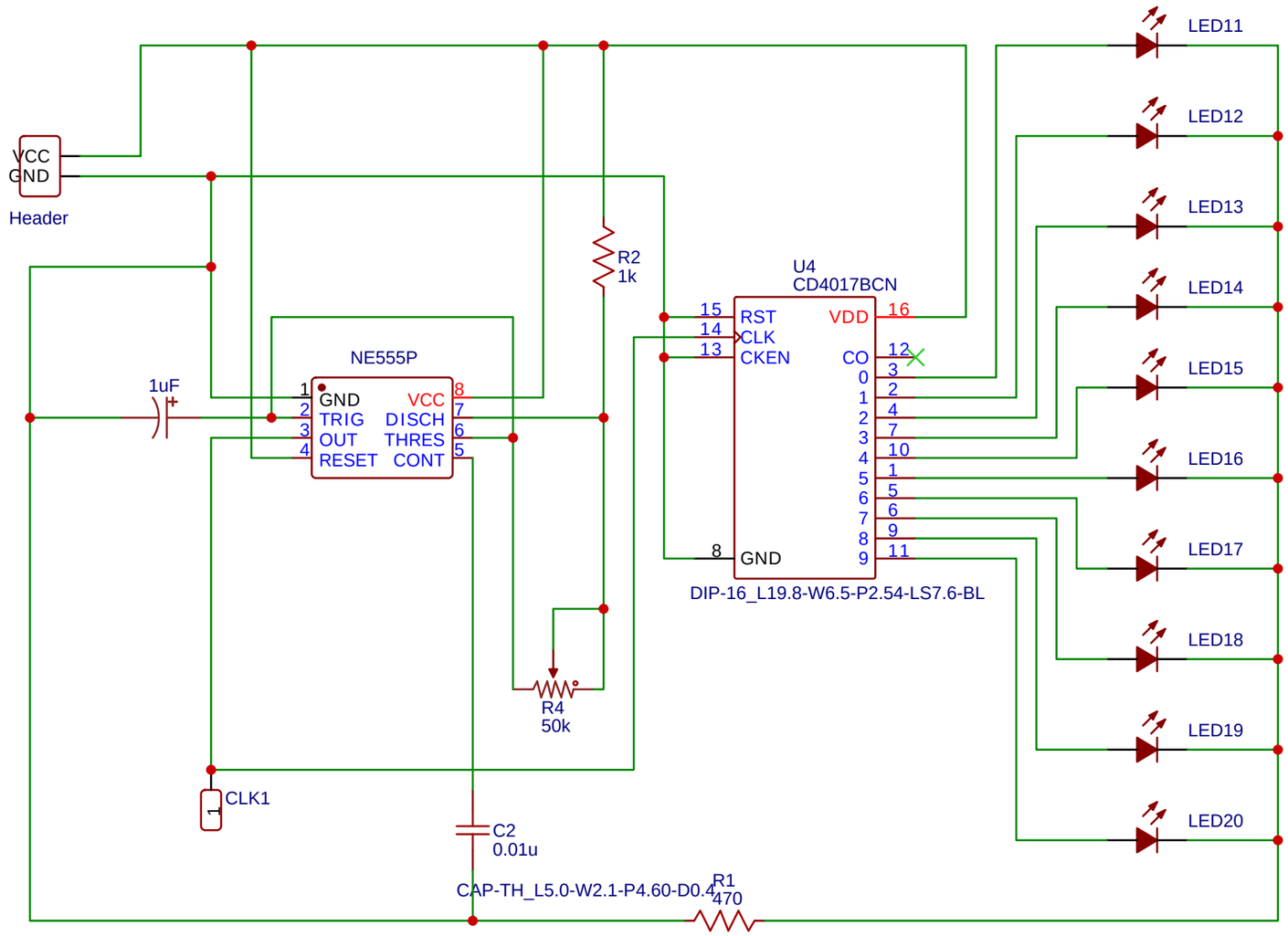

TITLE: Volkswagen Blinker Schematic		REV: 1.0
EasyEDA	Company: Your Company	Sheet: 1/1
	Date: 2025-10-19 Drawn By: ismellpie3	