25-1 Spanning Tree Troubleshooting – Lab Exercise

Spanning Tree is enabled by default so the troubleshooting lab comes before the configuration lab for this section. In this lab you will troubleshoot Spanning Tree for a small campus network.

Lab Topology

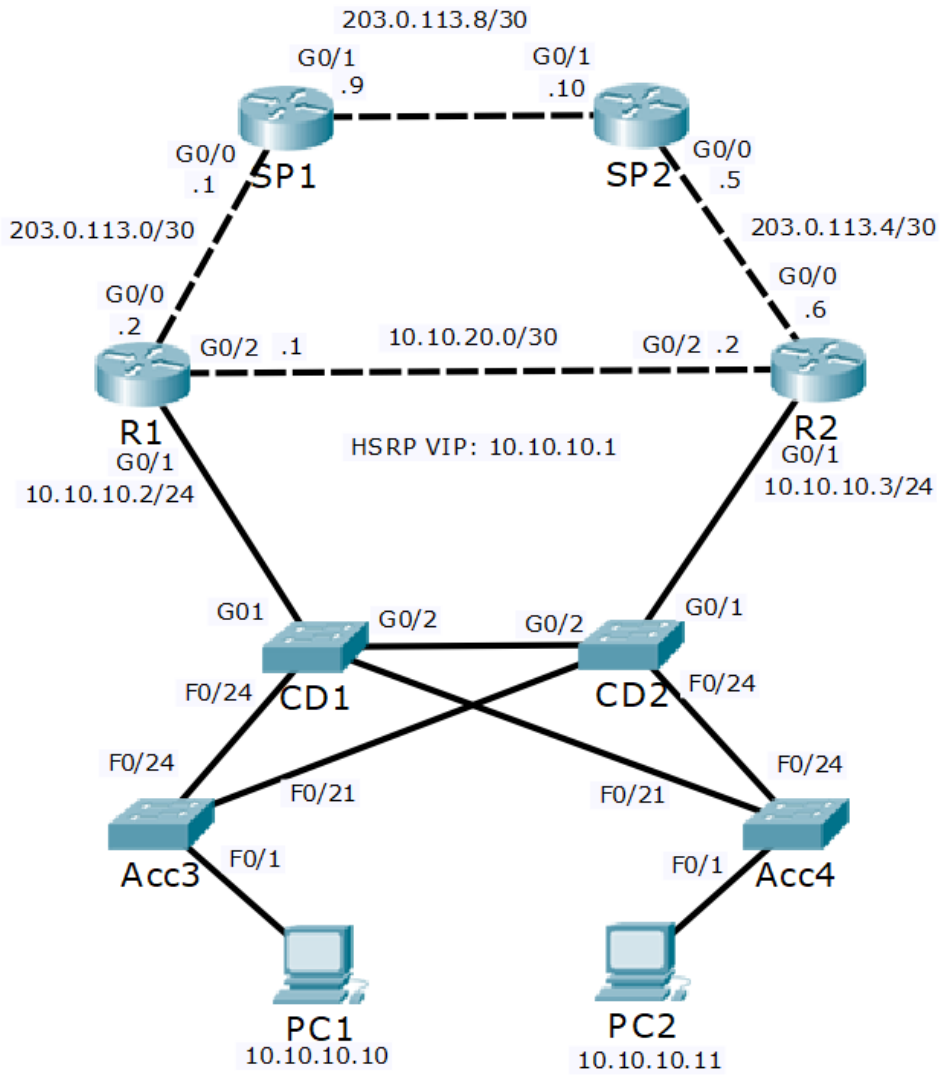

Load the Startup Configurations

IMPORTANT: Before loading the lab exercise, disable 'Show Link Lights' in Packet Tracer. (You can change it back at the end of the lab.)

In Packet Tracer, click 'Options > Preferences'

On the 'Interface' tab, uncheck 'Show Link Lights'

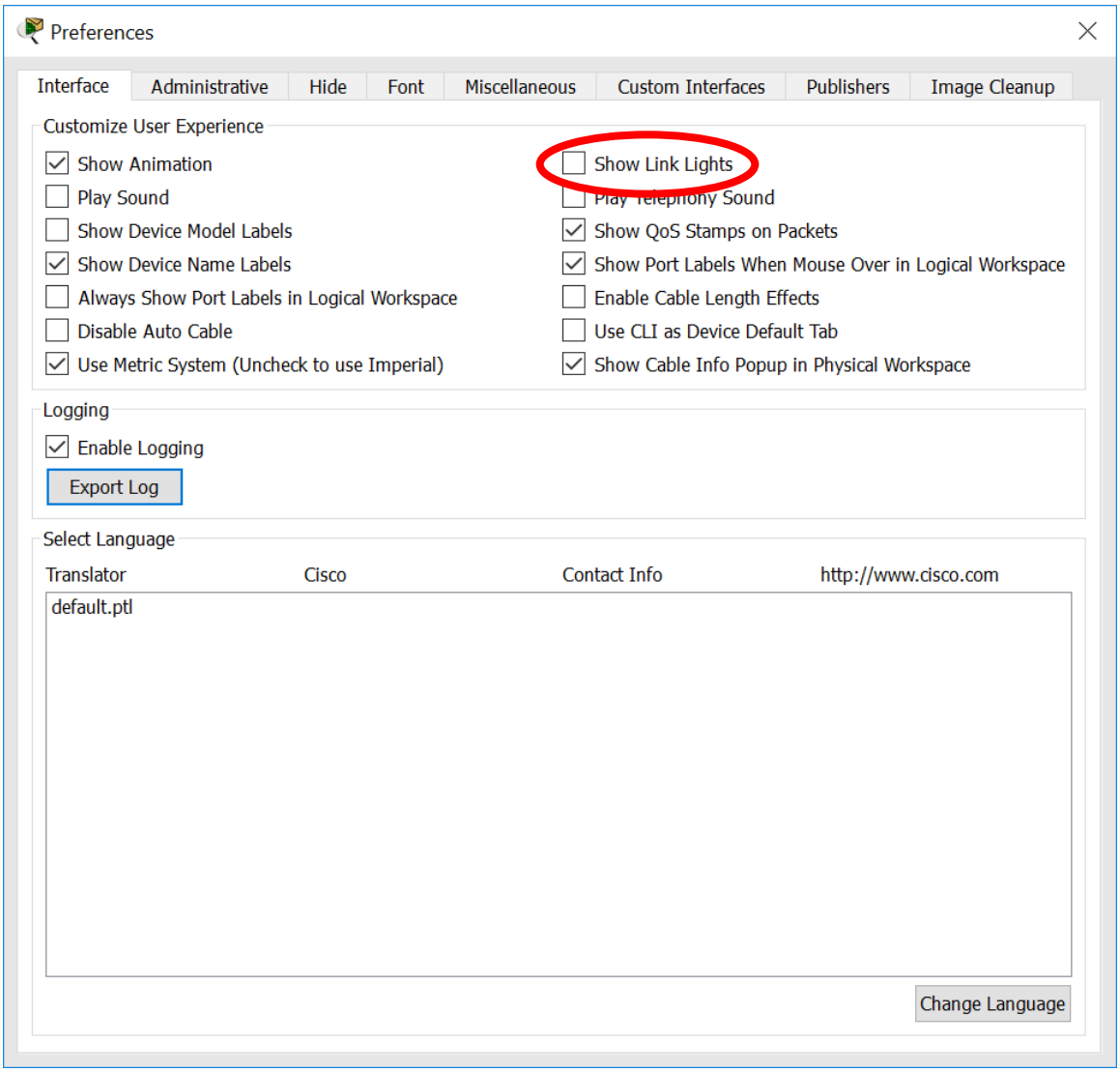

Download the '25-1 STP Troubleshooting.zip' file here. *Extract* the project .pkt file then open it in Packet Tracer. Do not try to open the project from directly inside the zip file.

Troubleshooting the Spanning Tree Protocol

1) The Network Operations Centre has reported that traffic is not following the most direct path from the branch office PCs to the Internet. Your task at this stage is to verify this.

   Your task is to diagram the Spanning Tree topology and report which path traffic is currently taking from both PC1 and PC2 to 203.0.113.9. Do not change any configuration.

25-1 Spanning Tree Troubleshooting - Answer Key

In this lab you will troubleshoot Spanning Tree for a small campus network.

Troubleshooting the Spanning Tree Protocol

1) The Network Operations Centre has reported that traffic is not following the most direct path from the branch office PCs to the Internet. Your task at this stage is to verify this.

   Your task is to diagram the Spanning Tree topology and report which path traffic is currently taking from both PC1 and PC2 to 203.0.113.9. Do not change any configuration.

There is not a set order of actions to troubleshoot this scenario. Troubleshooting in a logical fashion will however make it easier and quicker. This is how I would do it.

Check which router is the HSRP active gateway for the 10.10.10.0/24 network.

```
R1#show standby
GigabitEthernet0/1 - Group 1
State is Active
7 state changes, last state change 00:28:52
Virtual IP address is 10.10.10.1
Active virtual MAC address is 0000.0C07.AC01
Local virtual MAC address is 0000.0C07.AC01 (v1 default)
Hello time 3 sec, hold time 10 sec
Next hello sent in 2.276 secs
Preemption enabled
Active router is local
Standby router is 10.10.10.3, priority 100 (expires in 7
sec)
Priority 110 (configured 110)
Group name is hsrp-Gig0/1-1 (default)
```

R1 has been preconfigured with a higher HSRP priority and pre-emption enabled.

Check the PCs have connectivity to 203.0.113.9. Ping from both PCs.

```
C:\>ping 203.0.113.9

Pinging 203.0.113.9 with 32 bytes of data:

Request timed out.
Reply from 203.0.113.9: bytes=32 time=15ms TTL=254
Reply from 203.0.113.9: bytes=32 time=10ms TTL=254
Reply from 203.0.113.9: bytes=32 time<1ms TTL=254

Ping statistics for 203.0.113.9:
    Packets: Sent = 4, Received = 3, Lost = 1 (25% loss),
Approximate round trip times in milli-seconds:
    Minimum = 0ms, Maximum = 15ms, Average = 8ms
```

Check which Layer 3 path the PCs are using to get to 203.0.113.9. Run traceroute on both PCs.

```
C:\>tracert 203.0.113.9

Tracing route to 203.0.113.9 over a maximum of 30 hops:

  1   0 ms      0 ms      0 ms      10.10.10.2
  2   11 ms     0 ms      0 ms      203.0.113.9

Trace complete.
```

The PCs are taking the most direct path via their HSRP default gateway to get to 203.0.113.9. The Layer 3 configuration and operations all look good.

Check which VLAN the PCs are in on the Acc3 and Acc4 switches.

```
Acc3#show vlan brief

VLAN Name                             Status    Ports
---- -------------------------------- --------- -------------------------------
1    default                          active    Fa0/2, Fa0/3, Fa0/4, Fa0/5
                                                Fa0/6, Fa0/7, Fa0/8, Fa0/9
                                                Fa0/10, Fa0/11, Fa0/12, Fa0/13
                                                Fa0/14, Fa0/15, Fa0/16, Fa0/17
                                                Fa0/18, Fa0/19, Fa0/20, Fa0/22
                                                Fa0/23, Gig0/1, Gig0/2
10   Eng                              active    Fa0/1
20   Sales                            active
199  Native                           active
1002 fddi-default                     active
1003 token-ring-default               active
1004 fddinet-default                  active
1005 trnet-default                    active
```

The PCs are in the Eng VLAN 10.

On CD1 and CD2, check the switch ports connecting to the routers have also been configured as access ports in VLAN 10.

```
CD1#sh run
! truncated
interface GigabitEthernet0/1
switchport access vlan 10
switchport mode access
```

On all switches, check the interfaces connecting switches have been configured as trunks with matching native VLANs.

```
CD1#sh run
! truncated
!
interface FastEthernet0/21
switchport trunk native vlan 199
switchport mode trunk
!
interface FastEthernet0/24
switchport trunk native vlan 199
switchport mode trunk
!
interface GigabitEthernet0/2
switchport trunk native vlan 199
switchport mode trunk
```

The existing HSRP and VLAN configuration looks good.

The next thing to verify is Spanning Tree. One of the central core/distribution switches should be used as the Root Bridge to ensure Layer 2 traffic uses the most direct path over the network.

Check the Spanning Tree topology for VLAN 10 on switch Acc3.

```
Acc3#show spanning-tree vlan 10
VLAN0010
  Spanning tree enabled protocol ieee
  Root ID    Priority    32778
             Address     0001.C962.D43D
             This bridge is the root
             Hello Time  2 sec  Max Age 20 sec  Forward Delay 15 sec

  Bridge ID  Priority    32778  (priority 32768 sys-id-ext 10)
             Address     0001.C962.D43D
             Hello Time  2 sec  Max Age 20 sec  Forward Delay 15 sec
             Aging Time  20

Interface        Role Sts Cost      Prio.Nbr Type
---------------- ---- --- --------- -------- -------------------------
Fa0/1            Desg FWD 19        128.1    P2p
Fa0/24           Desg FWD 19        128.24   P2p
Fa0/21           Desg FWD 19        128.21   P2p
```

Acc3 is the Root Bridge. That is not good. Check to see if this is because it has a configured Bridge Priority.

```
Acc3#sh run | include priority
Acc3#
```

Bridge Priority has not been configured on Acc3. Check the other switches.

```
CD1#sh run | include priority
CD1#

CD2#sh run | include priority
CD2#

Acc4#sh run | include priority
Acc4#
```

Bridge Priority has not been configured anywhere so the switch with the lowest MAC address should be selected as the Root Bridge.

We learned that Acc3's MAC address is 0001.C962.D43D from the output of the 'show spanning tree vlan 10' command we ran on it.

Verify that all switches have matching Spanning Tree Root Bridge information. They should all have the same default Bridge Priority value (as one was not manually set), and agree that Acc3 has the lowest MAC address and is the Root Bridge.

```
CD1#sh spanning-tree vlan 10
VLAN0010
  Spanning tree enabled protocol ieee
  Root ID    Priority    32778
             Address     0001.C962.D43D
             Cost        19
             Port        24(FastEthernet0/24)
             Hello Time  2 sec  Max Age 20 sec  Forward Delay 15 sec

  Bridge ID  Priority    32778  (priority 32768 sys-id-ext 10)
             Address     0090.0CA0.3902
             Hello Time  2 sec  Max Age 20 sec  Forward Delay 15 sec
             Aging Time  20

Interface        Role Sts Cost      Prio.Nbr Type
---------------- ---- --- --------- -------- -------------------------
Fa0/21           Desg FWD 19        128.21   P2p
Fa0/24           Root FWD 19        128.24   P2p
Gi0/2            Altn BLK 4         128.26   P2p
Gi0/1            Desg FWD 4         128.25   P2p
```

CD1's MAC address is 0090.0CA0.3902. It agrees that Acc3 is the Root Bridge.

```
CD2#sh spanning-tree vlan 10
VLAN0010
  Spanning tree enabled protocol ieee
  Root ID    Priority    32778
             Address     0001.C962.D43D
             Cost        19
             Port        21(FastEthernet0/21)
             Hello Time  2 sec  Max Age 20 sec  Forward Delay 15 sec

  Bridge ID  Priority    32778  (priority 32768 sys-id-ext 10)
             Address     0090.0C16.7A9B
             Hello Time  2 sec  Max Age 20 sec  Forward Delay 15 sec
             Aging Time  20

Interface        Role Sts Cost      Prio.Nbr Type
---------------- ---- --- --------- -------- -------------------------
Fa0/21           Root FWD 19        128.21   P2p
Fa0/24           Desg FWD 19        128.24   P2p
Gi0/2            Desg FWD 4         128.26   P2p
Gi0/1            Desg FWD 4         128.25   P2p
```

CD2's MAC address is 0090.0C16.7A9B. It agrees that Acc3 is the Root Bridge.

```
Acc4#show spanning-tree vlan 10
VLAN0010
  Spanning tree enabled protocol ieee
  Root ID    Priority    32778
             Address     0001.C962.D43D
             Cost        38
             Port        24(FastEthernet0/24)
             Hello Time  2 sec  Max Age 20 sec  Forward Delay 15 sec

  Bridge ID  Priority    32778  (priority 32768 sys-id-ext 10)
             Address     0060.708A.D564
             Hello Time  2 sec  Max Age 20 sec  Forward Delay 15 sec
             Aging Time  20

Interface        Role Sts Cost      Prio.Nbr Type
---------------- ---- --- --------- -------- -------------------------
Fa0/1            Desg FWD 19        128.1    P2p
Fa0/21           Altn BLK 19        128.21   P2p
Fa0/24           Root FWD 19        128.24   P2p
```

Acc4's MAC address is 0060.708A.D564. It agrees that Acc3 is the Root Bridge.

We were asked to report on the forwarding paths currently being used. Use the output of the 'show spanning-tree vlan 10' commands on each switch to diagram the Spanning Tree.

Acc3 is the Root Bridge so all its ports are Designated Ports.

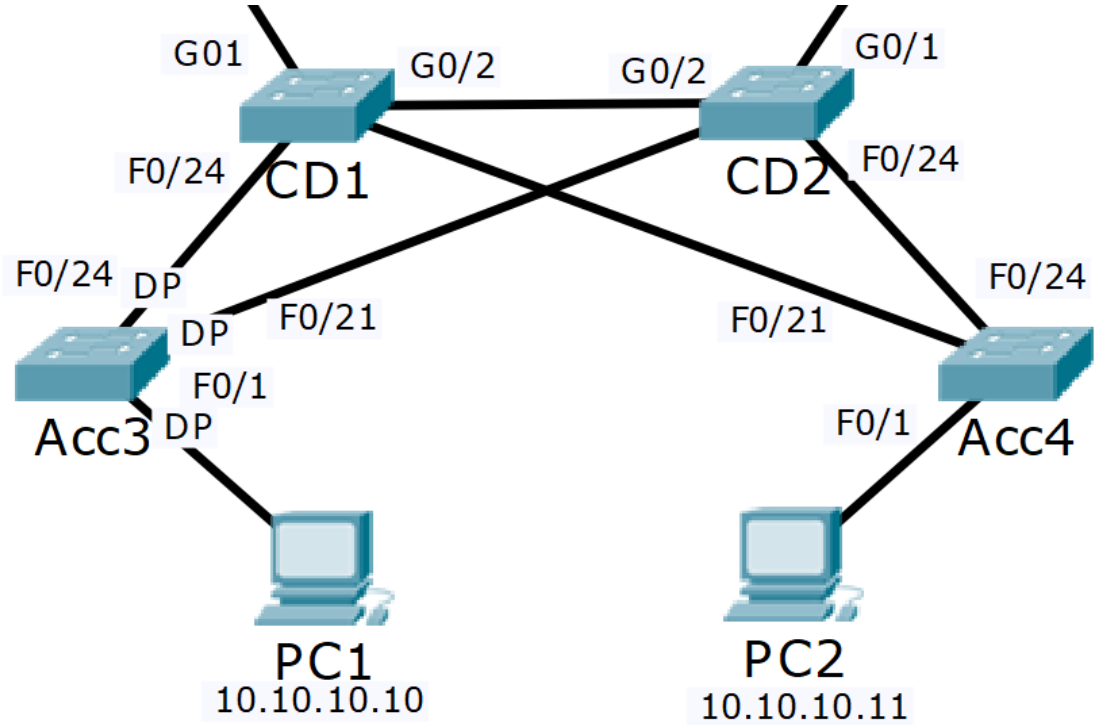

Add each switch's Root Port to the diagram. The 'Port' value in the 'Root ID' section of the 'show spanning-tree vlan 10' output shows this information.

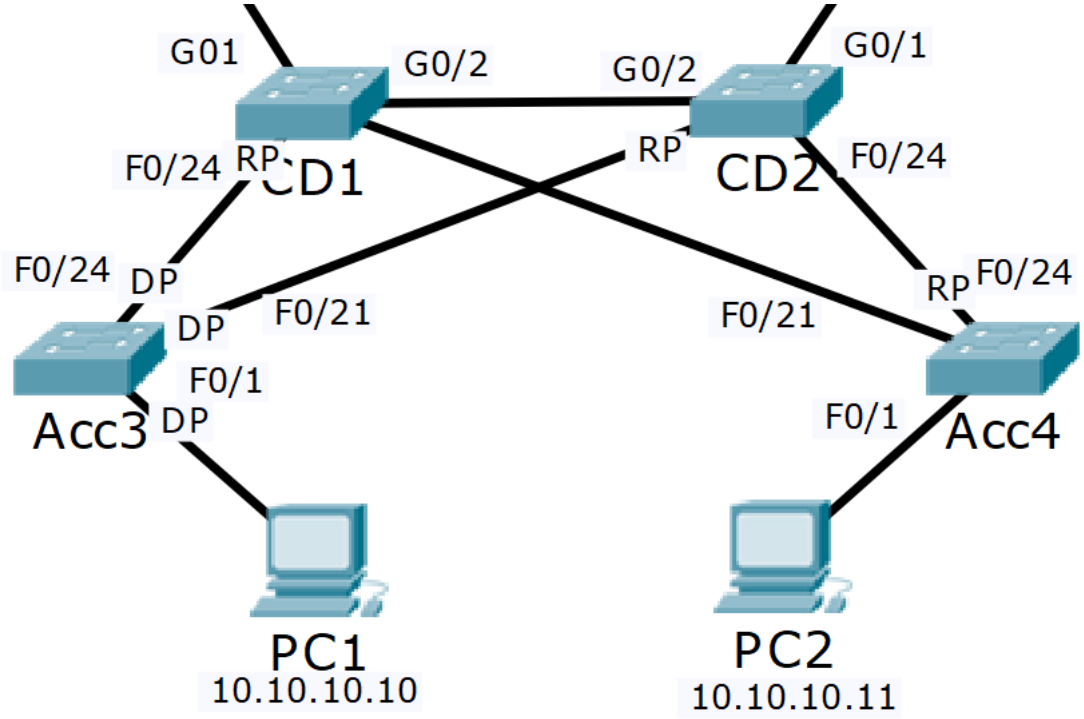

The port on the other side of Root Ports is always a Designated Port. Label F0/24 on CD2 as a Designated Port in the diagram.

The links which are left must be blocking. These are CD1 G0/2 to CD2 G0/2, and CD1 F0/21 to Acc4 F0/21. Check which side is blocking from the output of the 'show spanning-tree vlan 10' commands.

CD1 G0/2 is the blocking Alternate port, CD2 G0/2 is the forwarding Designated Port.
CD1 F0/21 is the forwarding Designated Port, Acc4 F0/21 is the blocking Alternate port.

Add this information to the diagram.

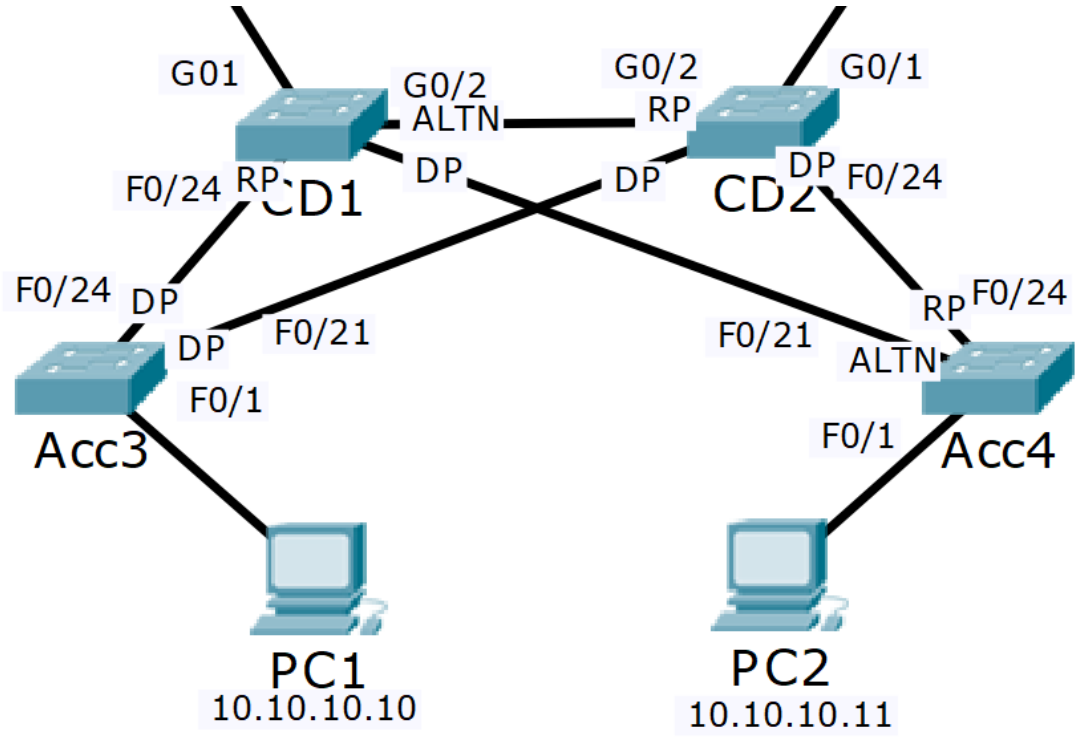

Continued on next page…

By removing the blocking links from the diagram we can see the Spanning Tree.

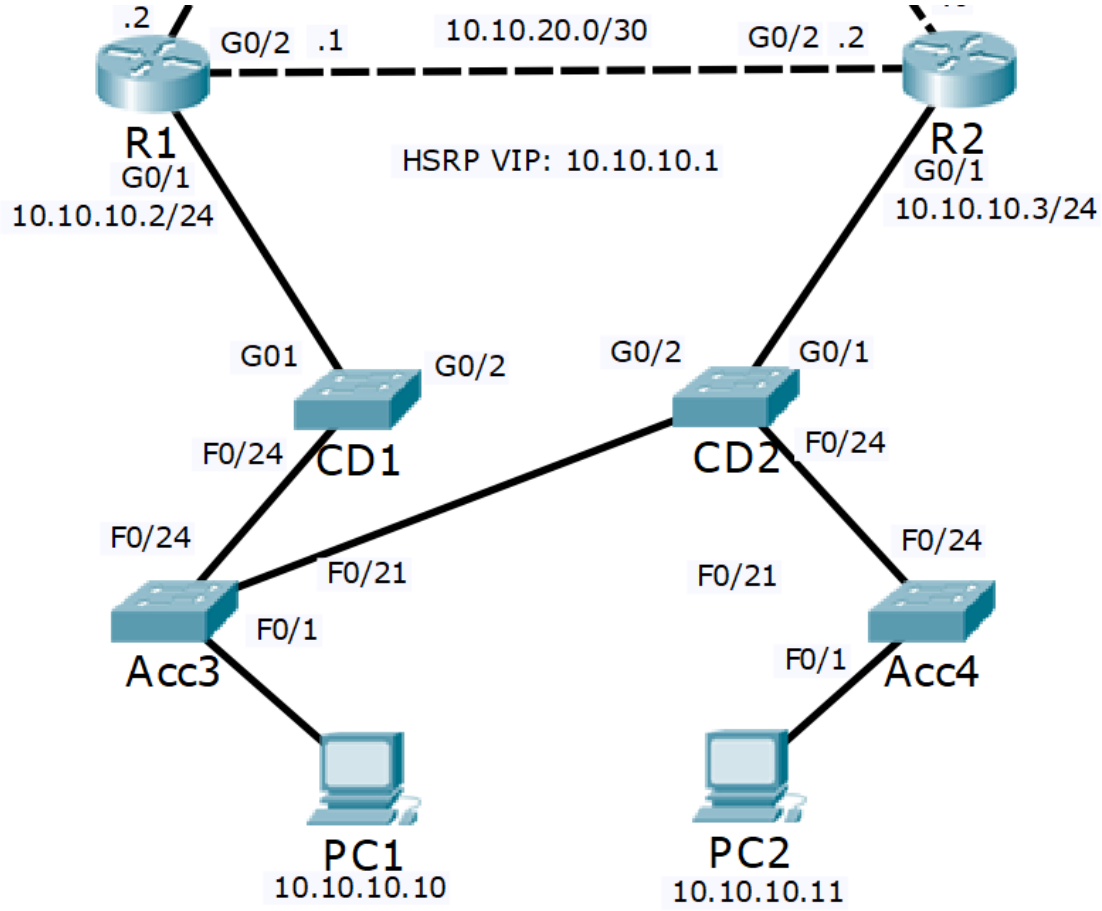

We can see that PC1 will take the path PC1 > Acc3 > CD1 > R1 to reach its HSRP default gateway. This is the most direct path and is good.

The end to end path from PC1 to 203.0.113.9 is PC1 > Acc3 > CD1 > R1 > SP1

PC2 however will use the path PC2 > Acc4 > CD2 > Acc3 > CD1 > R1. This is not the most direct path as traffic is transiting CD2 and Acc3 rather than going directly over the link from Acc4 to CD1.

The end to end path from PC2 to 203.0.113.9 is PC2 > Acc4 > CD2 > Acc3 > CD1 > R1 > SP1

We can verify the path being used by checking the MAC address tables on the switches. First verify the HSRP virtual MAC address.

```
R1#sh standby
GigabitEthernet0/1 - Group 1
State is Active
5 state changes, last state change 00:00:30
Virtual IP address is 10.10.10.1
Active virtual MAC address is 0000.0C07.AC01
```

Then clear the ARP cache on PC2, and ping the virtual IP address to generate traffic.

```
C:\>arp -d
C:\>ping 10.10.10.1

Pinging 10.10.10.1 with 32 bytes of data:

Reply from 10.10.10.1: bytes=32 time=22ms TTL=255
Reply from 10.10.10.1: bytes=32 time<1ms TTL=255
Reply from 10.10.10.1: bytes=32 time=11ms TTL=255
Reply from 10.10.10.1: bytes=32 time=11ms TTL=255

Ping statistics for 10.10.10.1:
    Packets: Sent = 4, Received = 4, Lost = 0 (0% loss),
Approximate round trip times in milli-seconds:
    Minimum = 0ms, Maximum = 22ms, Average = 11ms
```

Then check the MAC address table on Acc4.

```
Acc4#show mac address-table
          Mac Address Table
-------------------------------------------

Vlan    Mac Address       Type        Ports
----    -----------       --------    -----

   1    0002.1690.e018    DYNAMIC     Fa0/24
  10    0000.0c07.ac01    DYNAMIC     Fa0/24
  10    0001.6310.5d05    DYNAMIC     Fa0/1
  10    0001.6470.2502    DYNAMIC     Fa0/24
  10    0002.1690.e018    DYNAMIC     Fa0/24
  10    00d0.ffeb.2d02    DYNAMIC     Fa0/24
  20    0002.1690.e018    DYNAMIC     Fa0/24
 199    0002.1690.e018    DYNAMIC     Fa0/24
```

We can see that the HSRP virtual MAC address 0000.0c07.ac01 is reached through interface F0/24 to CD2, rather than on the direct link to CD1 over interface F0/21.

We can go hop by hop using the ‘show mac address-table’ command to verify the traffic path end to end across the switched network.

25-2 Spanning Tree Configuration – Lab Exercise

You discovered that switch Acc3 is the Root Bridge in the previous Spanning Tree Troubleshooting lab and traffic is not taking the most direct path across the network. You will correct the configuration in this lab.

Lab Topology

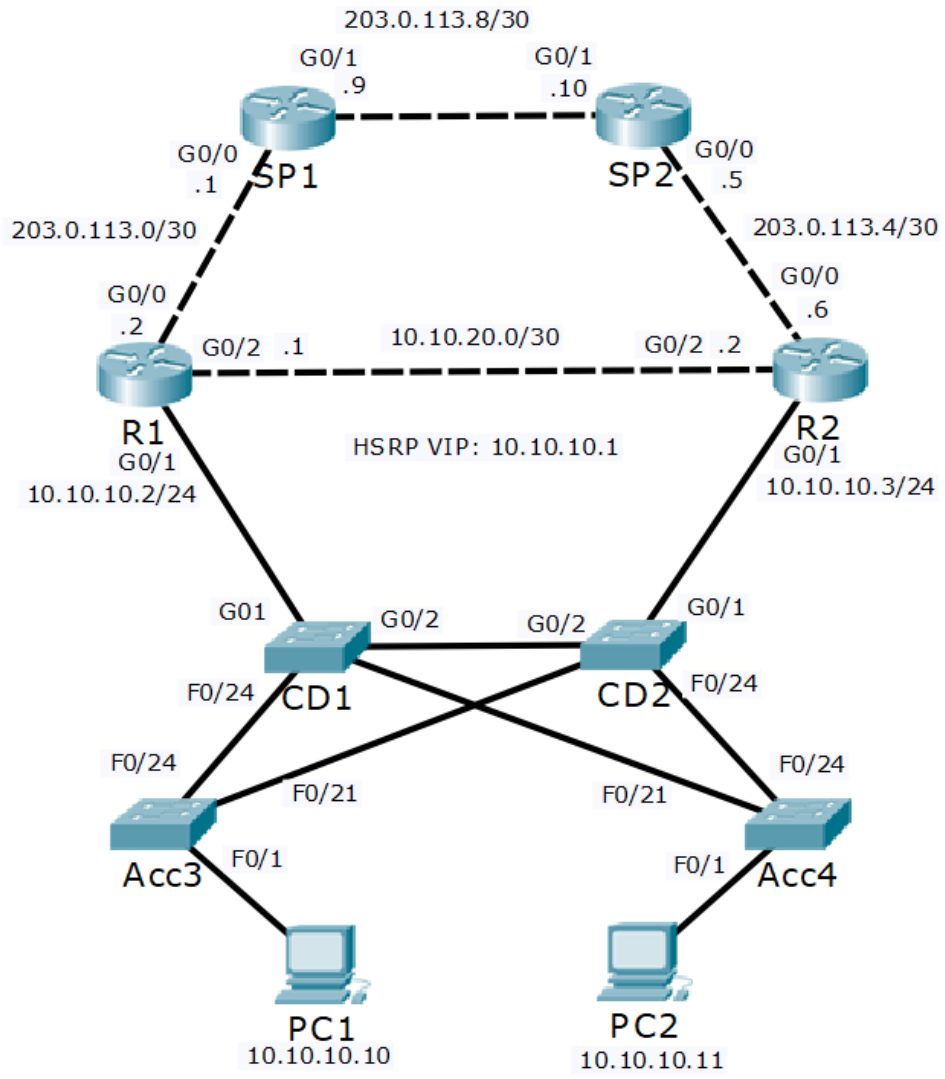

Load the Startup Configurations

Download the '25-2 EtherChannel Configuration.zip' file here. *Extract* the project .pkt file then open it in Packet Tracer. Do not try to open the project from directly inside the zip file.

Spanning Tree Root Bridge Configuration

1) Configure the network so that traffic between the PCs and the Internet travels along the shortest available path. If a core/distribution switch fails traffic should failover to the next shortest available path. Do not change any Layer 3 configuration such as HSRP settings.

Portfast and BPDU Guard Configuration

2) A Layer 2 loop cannot be formed on a port where a single end host is connected. Ensure these ports transition to a forwarding state immediately when they become active.

   You are concerned that a user may introduce a loop into the network by adding additional switches or changing the cabling. Also ensure these ports will be automatically shut down if a switch is detected on the other side of the link.

25-2 Spanning Tree Configuration - Answer Key

You discovered that switch Acc3 is the Root Bridge in the previous Spanning Tree Troubleshooting lab and traffic is not taking the most direct path across the network. You will correct the configuration in this lab.

Spanning Tree Root Bridge Configuration

1) Configure the network so that traffic between the PCs and the Internet travels along the shortest available path. If a core/distribution switch fails traffic should failover to the next shortest available path. Do not change any Layer 3 configuration such as HSRP settings.

We need to configure the Spanning Tree so it aligns with the HSRP configuration. R1 is the HSRP active gateway. R1 is directly connected to the core/distribution switch CD1 (but not CD2) so we should make this the Spanning Tree Root Bridge.

```
CD1(config)#spanning-tree vlan 10 root primary
```

If CD1 fails we need to ensure that the Spanning Tree Root Bridge will failover to CD2 rather than an access layer switch.

```
CD2(config)#spanning-tree vlan 10 root secondary
```

Verify CD1 has the best Bridge Priority and becomes the Root Bridge.

```
CD1#show spanning-tree vlan 10
VLAN0010
  Spanning tree enabled protocol ieee
  Root ID    Priority    24586
             Address     0090.0CA0.3902
             This bridge is the root
             Hello Time  2 sec  Max Age 20 sec  Forward Delay 15 sec

  Bridge ID  Priority    24586  (priority 24576 sys-id-ext 10)
             Address     0090.0CA0.3902
             Hello Time  2 sec  Max Age 20 sec  Forward Delay 15 sec
             Aging Time  20

Interface        Role Sts Cost      Prio.Nbr Type
---------------- ---- --- --------- -------- -------------------------
Fa0/21           Desg FWD 19        128.21   P2p
Fa0/24           Desg FWD 19        128.24   P2p
Gi0/1            Desg FWD 4         128.25   P2p
Gi0/2            Desg FWD 4         128.26   P2p
```

Check the other switches to verify CD2 has the next best Bridge Priority.

```
CD2#show spanning-tree vlan 10
VLAN0010
  Spanning tree enabled protocol ieee
  Root ID    Priority    24586
             Address     0090.0CA0.3902
             Cost        4
             Port        26(GigabitEthernet0/2)
             Hello Time  2 sec  Max Age 20 sec  Forward Delay 15 sec

  Bridge ID  Priority    28682  (priority 28672 sys-id-ext 10)
             Address     0090.0C16.7A9B
             Hello Time  2 sec  Max Age 20 sec  Forward Delay 15 sec
             Aging Time  20

Interface        Role Sts Cost      Prio.Nbr Type
---------------- ---- --- --------- -------- -------------------------
Gi0/2            Root FWD 4         128.26   P2p
Fa0/21           Desg FWD 19        128.21   P2p
Gi0/1            Desg FWD 4         128.25   P2p
Fa0/24           Desg FWD 19        128.24   P2p
```

```
Acc3#show spanning-tree vlan 10
VLAN0010
  Spanning tree enabled protocol ieee
  Root ID    Priority    24586
             Address     0090.0CA0.3902
             Cost        19
             Port        24(FastEthernet0/24)
             Hello Time  2 sec  Max Age 20 sec  Forward Delay 15 sec

  Bridge ID  Priority    32778  (priority 32768 sys-id-ext 10)
             Address     0001.C962.D43D
             Hello Time  2 sec  Max Age 20 sec  Forward Delay 15 sec
             Aging Time  20

Interface        Role Sts Cost      Prio.Nbr Type
---------------- ---- --- --------- -------- -------------------------
Fa0/1            Desg FWD 19        128.1    P2p
Fa0/21           Altn BLK 19        128.21   P2p
Fa0/24           Root FWD 19        128.24   P2p
```

```
Acc4#show spanning-tree vlan 10
VLAN0010
  Spanning tree enabled protocol ieee
  Root ID    Priority    24586
             Address     0090.0CA0.3902
             Cost        19
             Port        21(FastEthernet0/21)
             Hello Time  2 sec  Max Age 20 sec  Forward Delay 15 sec

  Bridge ID  Priority    32778  (priority 32768 sys-id-ext 10)
             Address     0060.708A.D564
             Hello Time  2 sec  Max Age 20 sec  Forward Delay 15 sec
             Aging Time  20

Interface        Role Sts Cost      Prio.Nbr Type
---------------- ---- --- --------- -------- -------------------------
Fa0/1            Desg FWD 19        128.1    P2p
Fa0/21           Root FWD 19        128.21   P2p
Fa0/24           Altn BLK 19        128.24   P2p
```

Verify the end to end traffic path between the PCs and the Internet by using the ‘show spanning-tree vlan 10’ and ‘show mac address-table’ commands as shown in the last lab exercise.

Portfast and BPDU Guard Configuration

2) A Layer 2 loop cannot be formed on a port where a single end host is connected. Ensure these ports transition to a forwarding state immediately when they become active.

   You are concerned that a user may introduce a loop into the network by adding additional switches or changing the cabling. Also ensure these ports will be automatically shut down if a switch is detected on the other side of the link.

```
Acc3(config)#int f0/1
Acc3(config-if)#spanning-tree portfast
Acc3(config-if)#spanning-tree bpduguard enable

Acc4(config)#int f0/1
Acc4(config-if)#spanning-tree portfast
Acc4(config-if)#spanning-tree bpduguard enable

CD1(config)#int g0/1
CD1(config-if)#spanning-tree portfast
CD1(config-if)#spanning-tree bpduguard enable

CD2(config)#int g0/1
CD2(config-if)#spanning-tree portfast
CD2(config-if)#spanning-tree bpduguard enable
```