26-1 EtherChannel Configuration – Lab Exercise

In this lab you will configure Etherchannel links in a campus LAN.

Lab Topology

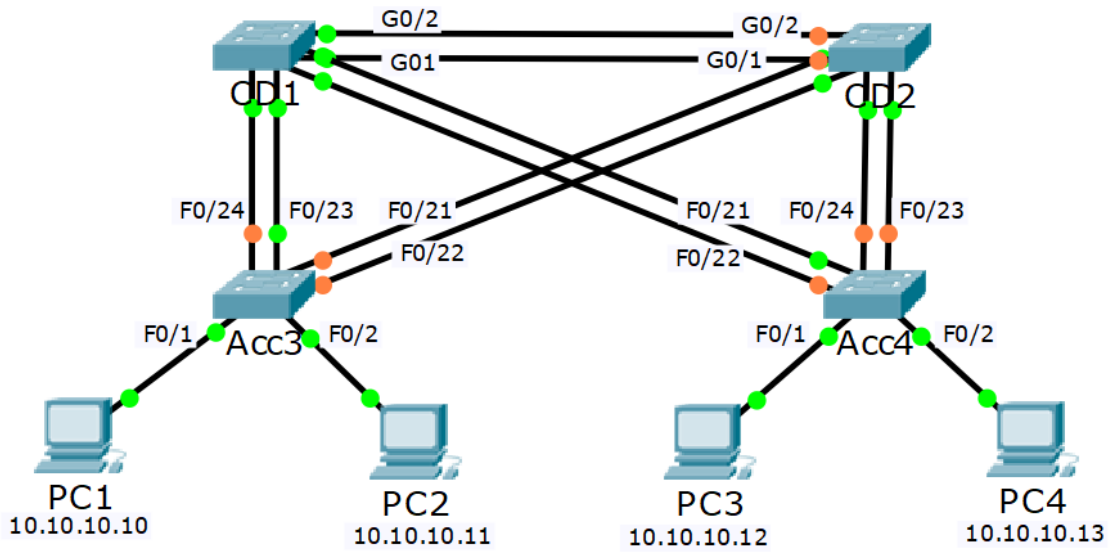

Load the Startup Configurations

Download the '26-1 EtherChannel Configuration.zip' file here. *Extract* the project .pkt file then open it in Packet Tracer. Do not try to open the project from directly inside the zip file.

LACP EtherChannel Configuration

1) The access layer switches Acc3 and Acc4 both have two FastEthernet uplinks. How much total bandwidth is available between the PCs attached to Acc3 and the PCs attached to Acc4?

2) Convert the existing uplinks from Acc3 to CD1 and CD2 to LACP EtherChannel. Configure descriptions on the port channel interfaces to help avoid confusion later.

3) Verify the EtherChannels come up.

PAgP EtherChannel Configuration

4) Convert the existing uplinks from Acc4 to CD1 and CD2 to PAgP EtherChannel. (Note that in a real world environment you should always use LACP if possible.)

5) Verify the EtherChannels come up.

Static EtherChannel Configuration

6) Convert the existing uplinks between CD1 and CD2 to static EtherChannel.

7) Verify the EtherChannel comes up.

8) How much total bandwidth is available between the PCs attached to Acc3 and the PCs attached to Acc4 now?

Layer 3 EtherChannel Configuration

The Layer 3 switches Switch1, Switch2 and Switch3 are physically separate from the switches you configured earlier in this lab exercise.

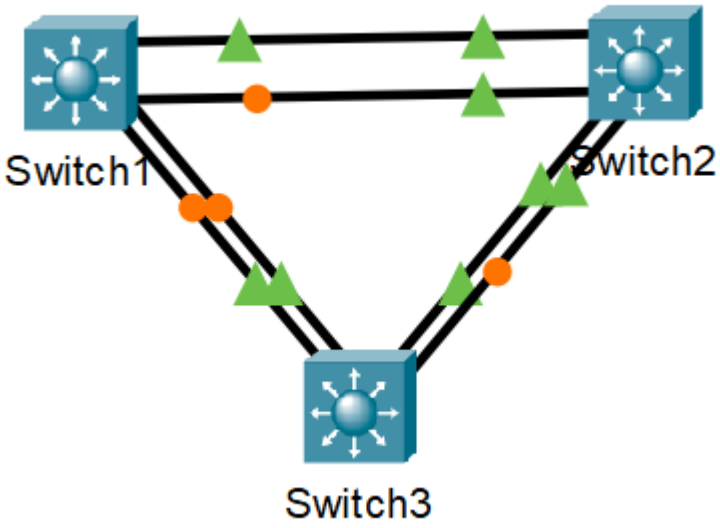

9) Switch1 and Switch2 are connected together with their GigabitEthernet1/0/1 and 1/0/2 interfaces.
Configure these interfaces as a Layer 3 Etherchannel with LACP.
Configure IP address 192.168.0.1/30 on Switch1 and 192.168.0.2/30 on Switch2.

10) Switch1 and Switch3 are connected together with their GigabitEthernet1/0/3 and 1/0/4 interfaces.
Configure these interfaces as a Layer 3 Etherchannel with LACP.
Configure IP address 192.168.0.5/30 on Switch1 and 192.168.0.6/30 on Switch3.

11) Switch2 and Switch3 are connected together with their GigabitEthernet1/0/5 and 1/0/6 interfaces.
Configure these interfaces as a Layer 3 Etherchannel with LACP.
Configure IP address 192.168.0.9/30 on Switch2 and 192.168.0.10/30 on Switch3.

12) Verify the EtherChannels come up.

13) Configure Switch1, Switch2 and Switch3 to advertise the IP subnets configured on their Etherchannel interfaces in OSPF Area 0.

14) Verify the OSPF adjacencies are formed successfully.

15) Verify Switch1, Switch2 and Switch3 have routes to all configured networks in their routing tables.

16) Which physical ports on which switches do you expect the Spanning Tree protocol to disable? Verify this.

26-1 EtherChannel Configuration - Answer Key

In this lab you will configure EtherChannel links in a campus LAN.

LACP EtherChannel Configuration

1) The access layer switches Acc3 and Acc4 both have two FastEthernet uplinks. How much total bandwidth is available between the PCs attached to Acc3 and the PCs attached to Acc4?

Spanning tree shuts down all but one uplink on both switches so the total bandwidth available between them is a single FastEthernet link – 100 Mbps.

2) Convert the existing uplinks from Acc3 to CD1 and CD2 to LACP EtherChannel. Configure descriptions on the port channel interfaces to help avoid confusion later.

The uplinks go to two separate redundant switches at the core/distribution layer so we need to configure two EtherChannels, one to CD1 and one to CD2.

We'll configure the Acc3 side of the EtherChannel to CD1 first. Don't forget to set the native VLAN on the new port channel interface.

```
Acc3(config)#interface range f0/23 - 24
Acc3(config-if-range)#channel-group 1 mode active
Acc3(config-if-range)#exit
Acc3(config)#interface port-channel 1
Acc3(config-if)#description Link to CD1
Acc3(config-if)#switchport mode trunk
Acc3(config-if)#switchport trunk native vlan 199
```

Then configure switch CD1 with matching settings.

```
CD1(config)#interface range f0/23 - 24
CD1(config-if-range)#channel-group 1 mode active
CD1(config-if-range)#exit
CD1(config)#interface port-channel 1
CD1(config-if)#description Link to Acc3
CD1(config-if)#switchport mode trunk
CD1(config-if)#switchport trunk native vlan 199
```

Next configure the Acc3 side of the EtherChannel to CD2. Remember to use a different port channel number.

```
Acc3(config)#interface range f0/21 - 22
Acc3(config-if-range)#channel-group 2 mode active
Acc3(config-if-range)#exit
Acc3(config)#interface port-channel 2
Acc3(config-if)#description Link to CD2
Acc3(config-if)#switchport mode trunk
Acc3(config-if)#switchport trunk native vlan 199
```

Then configure switch CD2 with matching settings.

```
CD2(config)#interface range f0/21 - 22
CD2(config-if-range)#channel-group 2 mode active
CD2(config-if-range)#exit
CD2(config)#interface port-channel 2
CD2(config-if)#description Link to Acc3
CD2(config-if)#switchport mode trunk
CD2(config-if)#switchport trunk native vlan 199
```

3) Verify the EtherChannels come up.

The port channels should show flags (SU) (Layer 2, in use) with member ports (P) (in port-channel). Verify on both sides of the port channel.

Acc3:

```
Acc3#show etherchannel summary
Flags:  D - down        P - in port-channel
        I - stand-alone s - suspended
        H - Hot-standby (LACP only)
        R - Layer3      S - Layer2
        U - in use      f - failed to allocate aggregator
        u - unsuitable for bundling
        w - waiting to be aggregated
        d - default port

Number of channel-groups in use: 2
Number of aggregators:           2

Group  Port-channel  Protocol    Ports
------+-------------+-----------+-------------------------

1      Po1(SU)           LACP   Fa0/23(P) Fa0/24(P)
2      Po2(SU)           LACP   Fa0/21(P) Fa0/22(P)
```

CD1:

```
CD1#show etherchannel summary
Flags:  D - down        P - in port-channel
        I - stand-alone s - suspended
        H - Hot-standby (LACP only)
        R - Layer3      S - Layer2
        U - in use      f - failed to allocate aggregator
        u - unsuitable for bundling
        w - waiting to be aggregated
        d - default port


Number of channel-groups in use: 1
Number of aggregators:           1

Group  Port-channel  Protocol    Ports
------+-------------+-----------+-------------------------

1      Po1(SU)           LACP   Fa0/23(P) Fa0/24(P)
```

CD2:

```
CD2#show etherchannel summary
Flags:  D - down        P - in port-channel
        I - stand-alone s - suspended
        H - Hot-standby (LACP only)
        R - Layer3      S - Layer2
        U - in use      f - failed to allocate aggregator
        u - unsuitable for bundling
        w - waiting to be aggregated
        d - default port


Number of channel-groups in use: 1
Number of aggregators:           1

Group  Port-channel  Protocol    Ports
------+-------------+-----------+-------------------------

2      Po2(SU)           LACP   Fa0/21(P) Fa0/22(P)
```

PAgP EtherChannel Configuration

4) Convert the existing uplinks from Acc4 to CD1 and CD2 to PAgP EtherChannel. (Note that in a real world environment you should always use LACP if possible.)

It's good practice to use the same port channel number on both sides of the link. CD1 is already using port channel 1 to Acc3, and CD2 is using port channel 2 to Acc3. From Acc4 to CD1 we'll use port channel 2, and from Acc4 to CD2 we'll use port channel 1.

We'll configure the Acc4 side of the EtherChannel to CD2 first.

```
Acc4(config)#interface range f0/23 - 24
Acc4(config-if-range)#channel-group 1 mode desirable
Acc4(config-if-range)#exit
Acc4(config)#interface port-channel 1
Acc4(config-if)#description Link to CD2
Acc4(config-if)#switchport mode trunk
Acc4(config-if)#switchport trunk native vlan 199
```

Then configure switch CD2 with matching settings.

```
CD2(config)#interface range f0/23 - 24
CD2(config-if-range)#channel-group 1 mode desirable
CD2(config-if-range)#exit
CD2(config)#interface port-channel 1
CD2(config-if)#description Link to Acc4
CD2(config-if)#switchport mode trunk
CD2(config-if)#switchport trunk native vlan 199
```

Next configure the Acc4 side of the EtherChannel to CD1. Remember to use a different port channel number.

```
Acc4(config)#interface range f0/21 - 22
Acc4(config-if-range)#channel-group 2 mode desirable
Acc4(config-if-range)#exit
Acc4(config)#interface port-channel 2
Acc4(config-if)#description Link to CD1
Acc4(config-if)#switchport mode trunk
Acc4(config-if)#switchport trunk native vlan 199
```

Then configure switch CD1 with matching settings.

```
CD1(config)#interface range f0/21 - 22
CD1(config-if-range)#channel-group 2 mode desirable
CD1(config-if-range)#exit
CD1(config)#interface port-channel 2
CD1(config-if)#description Link to Acc4
CD1(config-if)#switchport mode trunk
CD1(config-if)#switchport trunk native vlan 199
```

5) Verify the EtherChannels come up.

The port channels should show flags (SU) (Layer 2, in use) with member ports (P) (in port-channel). Verify on both sides of the port channel.

On the core/distribution layer switches you should see both the LACP and PAgP port channels up.

Acc4:

```
Acc4#show etherchannel summary
Flags:  D - down        P - in port-channel
        I - stand-alone s - suspended
        H - Hot-standby (LACP only)
        R - Layer3      S - Layer2
        U - in use      f - failed to allocate aggregator
        u - unsuitable for bundling
        w - waiting to be aggregated
        d - default port


Number of channel-groups in use: 2
Number of aggregators:           2

Group  Port-channel  Protocol    Ports
------+-------------+-----------+-------------------------

1      Po1(SU)           PAgP   Fa0/23(P) Fa0/24(P)
2      Po2(SU)           PAgP   Fa0/21(P) Fa0/22(P)
```

CD1:

```
CD1#show etherchannel summary
Flags:  D - down        P - in port-channel
        I - stand-alone s - suspended
        H - Hot-standby (LACP only)
        R - Layer3      S - Layer2
        U - in use      f - failed to allocate aggregator
        u - unsuitable for bundling
        w - waiting to be aggregated
        d - default port


Number of channel-groups in use: 2
Number of aggregators:           2

Group  Port-channel  Protocol    Ports
------+-------------+-----------+-------------------------

1      Po1(SU)           LACP   Fa0/23(P) Fa0/24(P)
2      Po2(SU)           PAgP   Fa0/21(P) Fa0/22(P)
```

CD2:

```
CD2#show etherchannel summary
Flags:  D - down        P - in port-channel
        I - stand-alone s - suspended
        H - Hot-standby (LACP only)
        R - Layer3      S - Layer2
        U - in use      f - failed to allocate aggregator
        u - unsuitable for bundling
        w - waiting to be aggregated
        d - default port


Number of channel-groups in use: 2
Number of aggregators:           2

Group  Port-channel  Protocol    Ports
------+-------------+-----------+-------------------------

1      Po1(SU)           PAgP   Fa0/23(P) Fa0/24(P)
2      Po2(SU)           LACP   Fa0/21(P) Fa0/22(P)
```

Static EtherChannel Configuration

6) Convert the existing uplinks between CD1 and CD2 to static EtherChannel.

Port channels 1 and 2 are already in use so we'll use port channel 3.

Configure the CD1 side first.

```
CD1(config)#interface range g0/1 - 2
CD1(config-if-range)#channel-group 3 mode on
CD1(config-if-range)#exit
CD1(config)#interface port-channel 3
CD1(config-if)#description Link to CD2
CD1(config-if)#switchport mode trunk
CD1(config-if)#switchport trunk native vlan 199
```

Then configure switch CD2 with matching settings.

```
CD2(config)#interface range g0/1 - 2
CD2(config-if-range)#channel-group 3 mode on
CD2(config-if-range)#exit
CD2(config)#interface port-channel 3
CD2(config-if)#description Link to CD1
CD2(config-if)#switchport mode trunk
CD2(config-if)#switchport trunk native vlan 199
```

7) Verify the EtherChannel comes up.

CD1:

```
CD1#show etherchannel summary
Flags:  D - down        P - in port-channel
        I - stand-alone s - suspended
        H - Hot-standby (LACP only)
        R - Layer3      S - Layer2
        U - in use      f - failed to allocate aggregator
        u - unsuitable for bundling
        w - waiting to be aggregated
        d - default port


Number of channel-groups in use: 3
Number of aggregators:           3

Group  Port-channel  Protocol    Ports
------+-------------+-----------+-------------------------

1      Po1(SU)           LACP   Fa0/23(P) Fa0/24(P)
2      Po2(SU)           PAgP   Fa0/21(P) Fa0/22(P)
3      Po3(SU)           -      Gig0/1(P) Gig0/2(P)
```

CD2:

```
CD2#show etherchannel summary
Flags:  D - down        P - in port-channel
        I - stand-alone s - suspended
        H - Hot-standby (LACP only)
        R - Layer3      S - Layer2
        U - in use      f - failed to allocate aggregator
        u - unsuitable for bundling
        w - waiting to be aggregated
        d - default port


Number of channel-groups in use: 3
Number of aggregators:           3

Group  Port-channel  Protocol    Ports
------+-------------+-----------+-------------------------

1      Po1(SU)           PAgP   Fa0/23(P) Fa0/24(P)
2      Po2(SU)           LACP   Fa0/21(P) Fa0/22(P)
3      Po3(SU)           -      Gig0/1(P) Gig0/2(P)
```

8) How much total bandwidth is available between the PCs attached to Acc3 and the PCs attached to Acc4 now?

The port channels from the Acc3 and Acc4 switches towards the root bridge CD1 are up and forwarding. Spanning tree shuts down the port channels toward CD2 to prevent a loop.

The port channels from Acc3 and Acc4 facing the root bridge comprise two FastEthernet interfaces, so the total bandwidth available between the PCs attached to the different access layer switches is 200 Mbps.

Layer 3 EtherChannel Configuration

The switches Switch1, Switch2 and Switch3 are physically separate from the switches you configured earlier in this lab exercise.

9) Switch1 and Switch2 are connected together with their GigabitEthernet1/0/1 and 1/0/2 interfaces.
Configure these interfaces as a Layer 3 Etherchannel with LACP.
Configure IP address 192.168.0.1/30 on Switch1 and 192.168.0.2/30 on Switch2.

You can use your choice of number for the channel-group. Starting at '1' and using the same number on both sides keeps the configuration logical and easier to troubleshoot.

```
Switch1(config)#interface range GigabitEthernet 1/0/1 - 2
Switch1(config-if-range)#no switchport
Switch1(config-if-range)#channel-group 1 mode active
Switch1(config-if-range)#exit

Switch1(config)#interface port-channel 1
Switch1(config-if)#ip address 192.168.0.1 255.255.255.252
Switch1(config-if)#no shutdown

Switch2(config)#interface range GigabitEthernet 1/0/1 - 2
Switch2(config-if-range)#no switchport
Switch2(config-if-range)#channel-group 1 mode active
Switch2(config-if-range)#exit

Switch2(config)#interface port-channel 1
Switch2(config-if)#ip address 192.168.0.2 255.255.255.252
Switch2(config-if)#no shutdown
```

10) Switch1 and Switch3 are connected together with their GigabitEthernet1/0/3 and 1/0/4 interfaces.
Configure these interfaces as a Layer 3 Etherchannel with LACP.
Configure IP address 192.168.0.5/30 on Switch1 and 192.168.0.6/30 on Switch3.

```
Switch1(config)#interface range GigabitEthernet 1/0/3 - 4
Switch1(config-if-range)#no switchport
Switch1(config-if-range)#channel-group 2 mode active
Switch1(config-if-range)#exit

Switch1(config)#interface port-channel 2
Switch1(config-if)#ip address 192.168.0.5 255.255.255.252
Switch1(config-if)#no shutdown

Switch3(config)#interface range GigabitEthernet 1/0/3 - 4
Switch3(config-if-range)#no switchport
Switch3(config-if-range)#channel-group 2 mode active
Switch3(config-if-range)#exit

Switch3(config)#interface port-channel 2
Switch3(config-if)#ip address 192.168.0.6 255.255.255.252
Switch3(config-if)#no shutdown
```

11) Switch2 and Switch3 are connected together with their GigabitEthernet1/0/5 and 1/0/6 interfaces.
Configure these interfaces as a Layer 3 Etherchannel with LACP.
Configure IP address 192.168.0.9/30 on Switch2 and 192.168.0.10/30 on Switch3.

```
Switch2(config)#interface range GigabitEthernet 1/0/5 - 6
Switch2(config-if-range)#no switchport
Switch2(config-if-range)#channel-group 3 mode active
Switch2(config-if-range)#exit

Switch2(config)#interface port-channel 3
Switch2(config-if)#ip address 192.168.0.9 255.255.255.252
Switch2(config-if)#no shutdown

Switch3(config)#interface range GigabitEthernet 1/0/5 - 6
Switch3(config-if-range)#no switchport
Switch3(config-if-range)#channel-group 3 mode active
Switch3(config-if-range)#exit

Switch3(config)#interface port-channel 3
Switch3(config-if)#ip address 192.168.0.10 255.255.255.252
Switch3(config-if)#no shutdown
```

12) Verify the EtherChannels come up.

```
Switch1#show etherchannel summary
Flags:  D - down        P - in port-channel
        I - stand-alone s - suspended
        H - Hot-standby (LACP only)
        R - Layer3      S - Layer2
        U - in use      f - failed to allocate aggregator
        u - unsuitable for bundling
        w - waiting to be aggregated
        d - default port


Number of channel-groups in use: 2
Number of aggregators:           2

Group  Port-channel  Protocol    Ports
------+-------------+-----------+-----------------------

1      Po1(RU)           LACP   Gig1/0/1(P) Gig1/0/2(P)
2      Po2(RU)           LACP   Gig1/0/3(P) Gig1/0/4(P)


Switch2#show etherchannel summary
Flags:  D - down        P - in port-channel
        I - stand-alone s - suspended
        H - Hot-standby (LACP only)
        R - Layer3      S - Layer2
        U - in use      f - failed to allocate aggregator
        u - unsuitable for bundling
        w - waiting to be aggregated
        d - default port


Number of channel-groups in use: 2
Number of aggregators:           2

Group  Port-channel  Protocol    Ports
------+-------------+-----------+-----------------------

1      Po1(RU)           LACP   Gig1/0/1(P) Gig1/0/2(P)
3      Po3(RU)           LACP   Gig1/0/5(P) Gig1/0/6(P)
```

```
Switch3#sh etherchannel summary
Flags:  D - down        P - in port-channel
        I - stand-alone s - suspended
        H - Hot-standby (LACP only)
        R - Layer3      S - Layer2
        U - in use      f - failed to allocate aggregator
        u - unsuitable for bundling
        w - waiting to be aggregated
        d - default port


Number of channel-groups in use: 2
Number of aggregators:           2

Group  Port-channel  Protocol    Ports
------+-------------+-----------+-----------------------

2      Po2(RU)           LACP   Gig1/0/3(P) Gig1/0/4(P)
3      Po3(RU)           LACP   Gig1/0/5(P) Gig1/0/6(P)
```

13) Configure Switch1, Switch2 and Switch3 to advertise the IP subnets configured on their Etherchannel interfaces in OSPF Area 0.

On Switch1, Switch2 and Switch3:

```
Switch1(config)#ip routing
Switch1(config)#router ospf 1
Switch1(config-router)#network 192.168.0.0 0.0.0.255 area 0
```

14) Verify the OSPF adjacencies are formed successfully.

On Switch1, Switch2 and Switch3:

```
Switch1#show ip ospf neighbor


Neighbor ID     Pri   State           Dead Time   Address         Interface
192.168.0.10      1   FULL/BDR        00:00:38    192.168.0.6     Port-channel2
192.168.0.9       1   FULL/BDR        00:00:30    192.168.0.2     Port-channel1
```

15) Verify Switch1, Switch2 and Switch3 have routes to all configured networks in their routing tables.

```
Switch1#show ip route
Codes: C - connected, S - static, I - IGRP, R - RIP, M - mobile, B - BGP
       D - EIGRP, EX - EIGRP external, O - OSPF, IA - OSPF inter area
       N1 - OSPF NSSA external type 1, N2 - OSPF NSSA external type 2
       E1 - OSPF external type 1, E2 - OSPF external type 2, E - EGP
       i - IS-IS, L1 - IS-IS level-1, L2 - IS-IS level-2, ia - IS-IS inter area
       * - candidate default, U - per-user static route, o - ODR
       P - periodic downloaded static route

Gateway of last resort is not set

     192.168.0.0/30 is subnetted, 3 subnets
C       192.168.0.0 is directly connected, Port-channel1
C       192.168.0.4 is directly connected, Port-channel2
O       192.168.0.8 [110/2] via 192.168.0.2, 00:01:57, Port-channel1
                    [110/2] via 192.168.0.6, 00:01:57, Port-channel2
```

```
Switch2#show ip route
Codes: C - connected, S - static, I - IGRP, R - RIP, M - mobile, B - BGP
       D - EIGRP, EX - EIGRP external, O - OSPF, IA - OSPF inter area
       N1 - OSPF NSSA external type 1, N2 - OSPF NSSA external type 2
       E1 - OSPF external type 1, E2 - OSPF external type 2, E - EGP
       i - IS-IS, L1 - IS-IS level-1, L2 - IS-IS level-2, ia - IS-IS inter area
       * - candidate default, U - per-user static route, o - ODR
       P - periodic downloaded static route

Gateway of last resort is not set

     192.168.0.0/30 is subnetted, 3 subnets
C       192.168.0.0 is directly connected, Port-channel1
O       192.168.0.4 [110/2] via 192.168.0.1, 00:02:45, Port-channel1
                    [110/2] via 192.168.0.10, 00:02:45, Port-channel3
C       192.168.0.8 is directly connected, Port-channel3
```

```
Switch3#show ip route
Codes: C - connected, S - static, I - IGRP, R - RIP, M - mobile, B - BGP
       D - EIGRP, EX - EIGRP external, O - OSPF, IA - OSPF inter area
       N1 - OSPF NSSA external type 1, N2 - OSPF NSSA external type 2
       E1 - OSPF external type 1, E2 - OSPF external type 2, E - EGP
       i - IS-IS, L1 - IS-IS level-1, L2 - IS-IS level-2, ia - IS-IS inter area
       * - candidate default, U - per-user static route, o - ODR
       P - periodic downloaded static route

Gateway of last resort is not set

     192.168.0.0/30 is subnetted, 3 subnets
O       192.168.0.0 [110/2] via 192.168.0.5, 00:03:13, Port-channel2
                    [110/2] via 192.168.0.9, 00:03:13, Port-channel3
C       192.168.0.4 is directly connected, Port-channel2
C       192.168.0.8 is directly connected, Port-channel3
```

16) Which physical ports on which switches do you expect the Spanning Tree protocol to disable? Verify this.

Spanning Tree only runs on Layer 2 interfaces. It will not run on or shut any of the ports down as they are all Layer 3 ports. The Layer 3 switches' routing tables will handle path selection, redundancy and load balancing.

```
Switch1#show spanning-tree

No spanning tree instance exists.
```