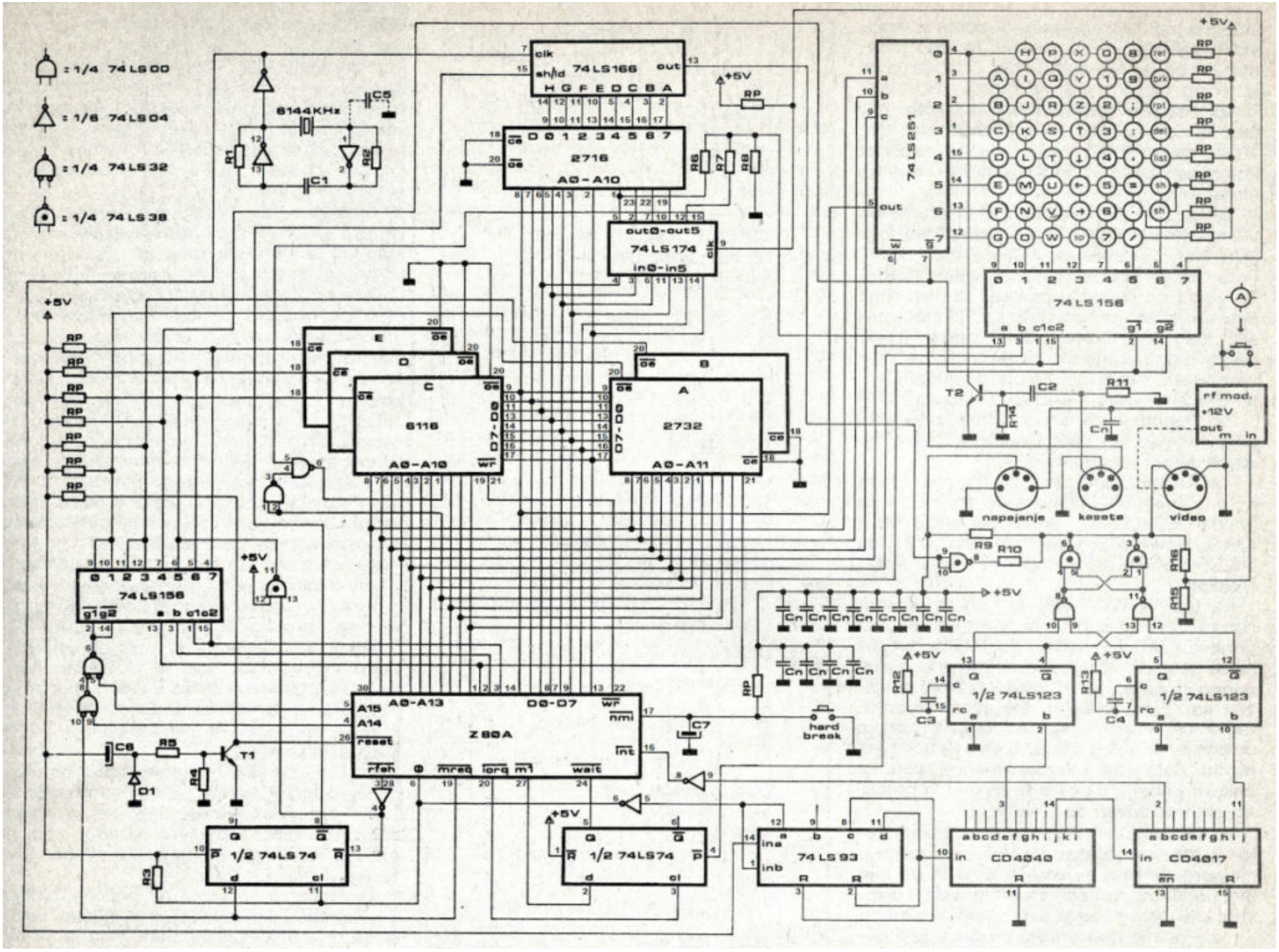
: 1/4 74LS00
: 1/6 74LS04
: 1/4 74LS32
: 1/4 74LS38
6144KHz
C5
R1
R2
C1
74LS166
clk
sh/ld
out
H G F E D C B A
+5V
RP
2716
A0-A10
D0 1 2 3 4 5 6 7
R6
R7
R8
out0-out5
74LS174
in0-in5
74LS251
out
74LS156
a b c1c2
g1 g2
6116
A0-A10
D7-D0
2732
A0-A11
T2
C2
R11
R14
Cn
rf mod.
+12V
out
m
in
napajanje
kasete
video
R9
R10
R16
R15
R12
R13
C3
C4
1/2 74LS123
hard break
A0-A13
D0-D7
Z80A
A15
A14
reset
wf
nmi
int
rfsh
mreq
iorq
m1
wait
C7
C6
R5
T1
D1
R4
R3
1/2 74LS74
74LS93
ina
inb
CD4040
CD4017
in
a b c d e f g h i j k l