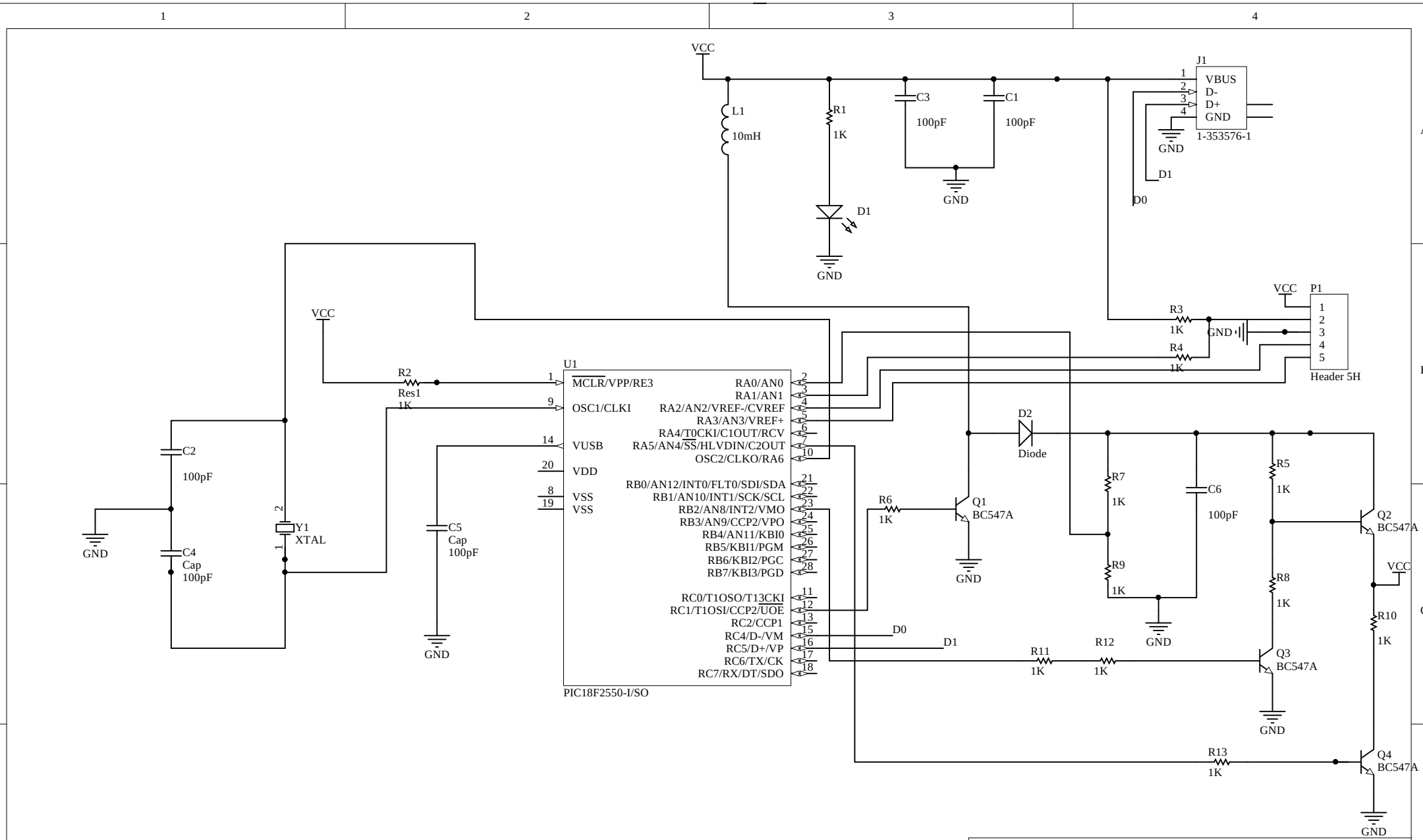

Title		
Size A4	Number	Revision
Date: 18/02/2022	Sheet of	
File: C:\Users\..\Sheet1.SchDoc	Drawn By:	

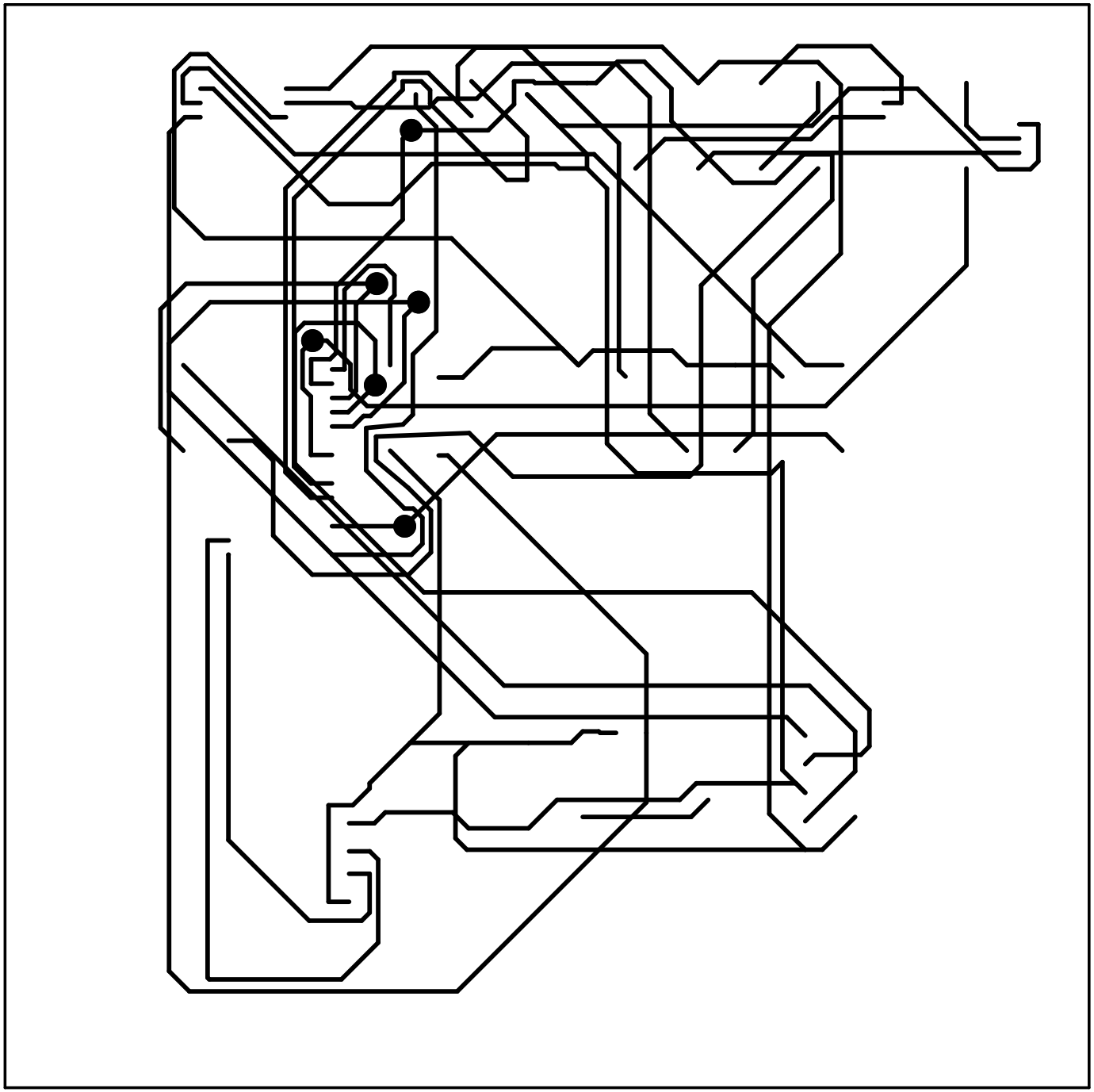

Item #	mn Name Error:Manufa	#Column Name Error:Manufacturer No	Quantity	#Column Name Error:Note	Designator	Description	Footprint	Comment	LibRef
1			7		C1, C2, C3, C4, C5, C6, C7	Capacitor	RAD-0.3	Cap	Cap
2			1		D1	Typical RED GaAs LED	LED-1	LED1	LED1
3			1		D2	Default Diode	SMC	Diode	Diode
4			1		J1	USB 1.1, Right Angle, SMT, A Type, Receptacle, 4 Position, White	353576	1-353576-1	1-353576-1
5			1		L1	Inductor	INDC3216	Inductor	Inductor
6			1		P1	Header, 5-Pin, Right Angle	HDR1X5H	Header 5H	Header 5H
7			4		Q1, Q2, Q3, Q4	Amplifier Transistor NPN Silicon	29-03	BC547A	BC547A
8			17		R1, R2, R3, R4, R5, R6, R7, R8, R9, R10, R11, R12, R13, R14, R15, R16, R17	Resistor	AXIAL-0.3	Res1	Res1
9			1		U1	High Performance, Enhanced Flash, USB Microcontroller with nanoWatt Technology, 32K Flash, 28-Pin SOIC, Industrial Temperature Range	SOIC-SO28_M	PIC18F2550-I/SO	PIC18F2550-I/SO
10			1		Y1	Crystal Oscillator	R38	XTAL	XTAL