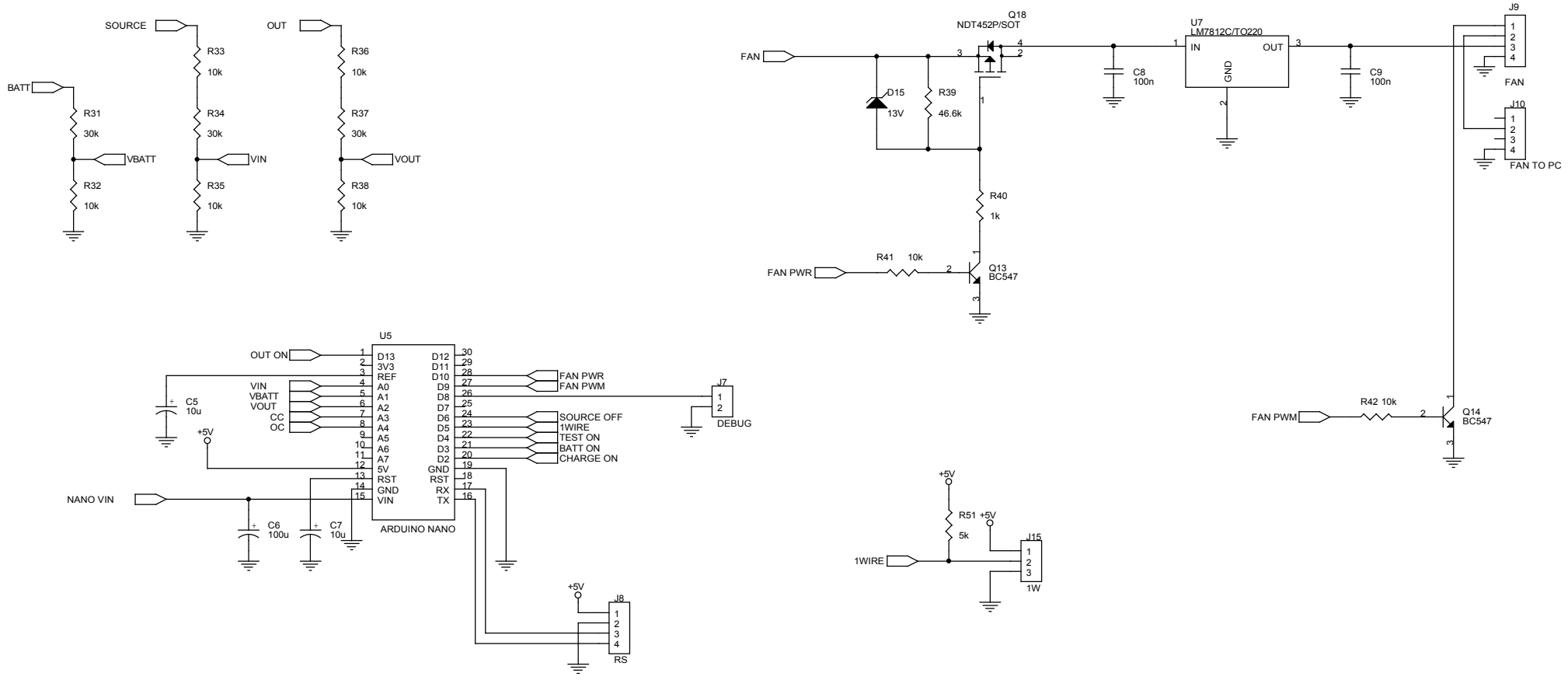


| | | |
|---|---|---|
| Title | Miniups ohjain, ohjaus | |
| Size A3 | Document Number 3/4 | Rev 1.0 |
| Date: Wednesday, October 11, 2023 | Sheet 3 of 4 | |