ISLAMIC UNIVERSITY OF TECHNOLOGY

Group Name: Team Red Hell

Design Phases:

The final design of the 6-bit computer

Phase – A:
- Clock Pulse generator
- Program Counter
- Memory Address Register (MAR)

Phase – B: Memory Units

1. Registers:
    i. Accumulator
    ii. B Register
    iii. Output Register
2. Random Access Memory (RAM)

Clock Pulse Generator

clock pulse generator is used to generate clock pulses which would connect the system and activate each component of the system. has ben this design, a 555 timer create is used to create the clock pulses. using the IC in two modes Astable multivibrator and Monostable multivibrator.

Astable multivibrator is automated pulse generator and in monostable mode clock pulse is generated by user input. To switch between two modes another switching input is given gates AND gates and NOT gates are used to select

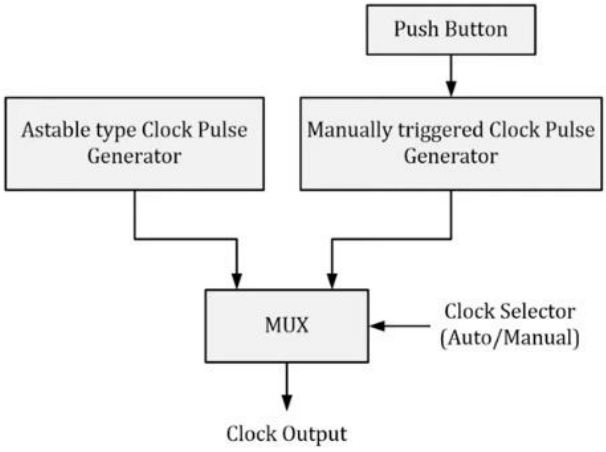

which would be passed.

The schematic of the clock pulse generator ckt is given below- there are 3 input ping manual, auto and hit manual input turns on auto input will turn off and vice versa. is a halt input from control unit which stops the process.

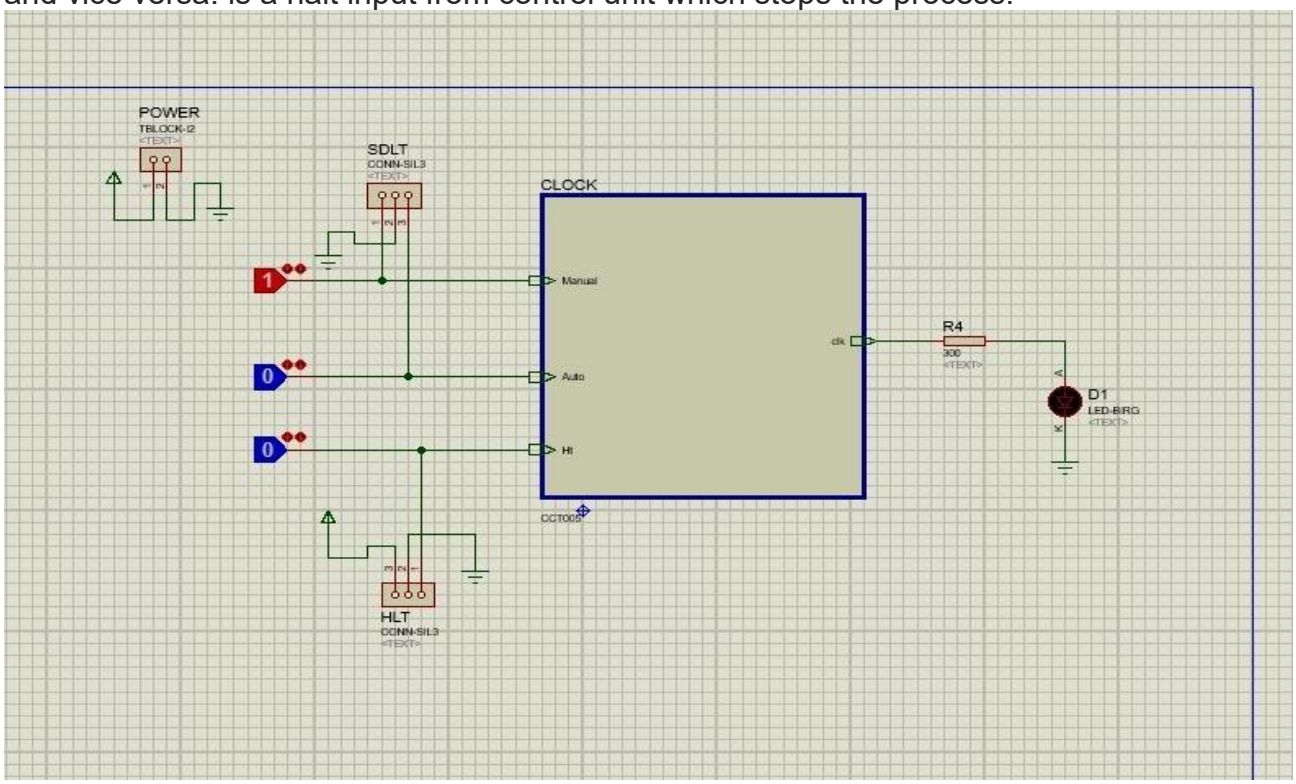

Inside thet digram here are two 555 timers one of in astable configuration another in monostable
configuration.

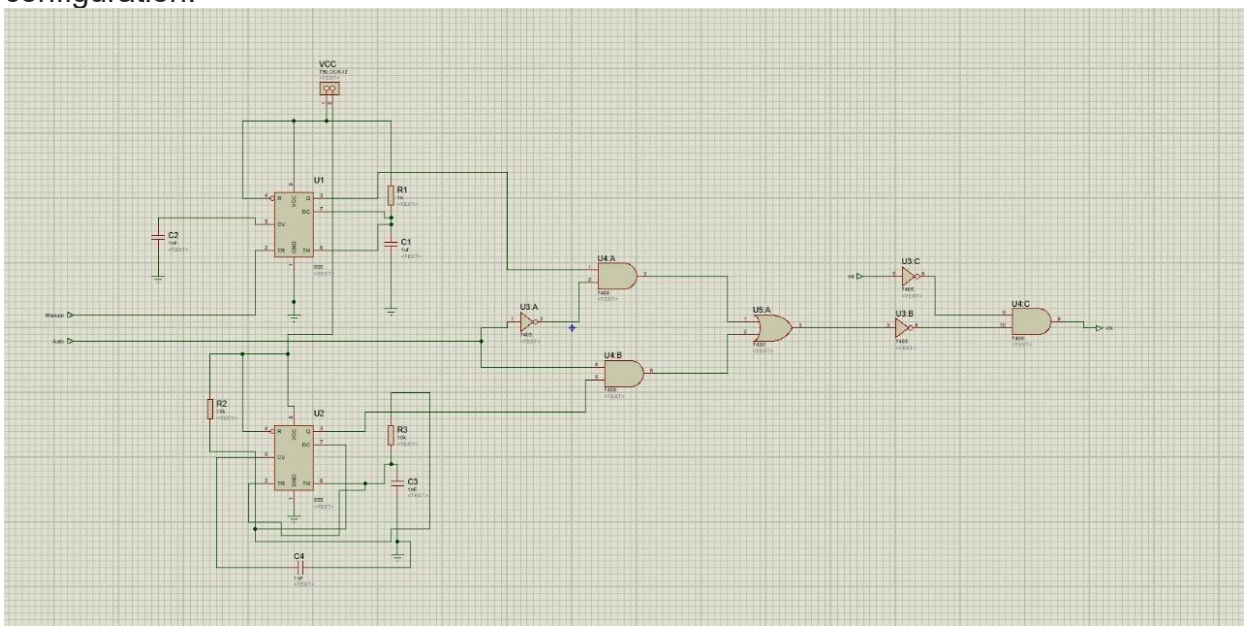

Depending on the ratio of resistors used in the configuration duty cycle of the clock pulse might change.

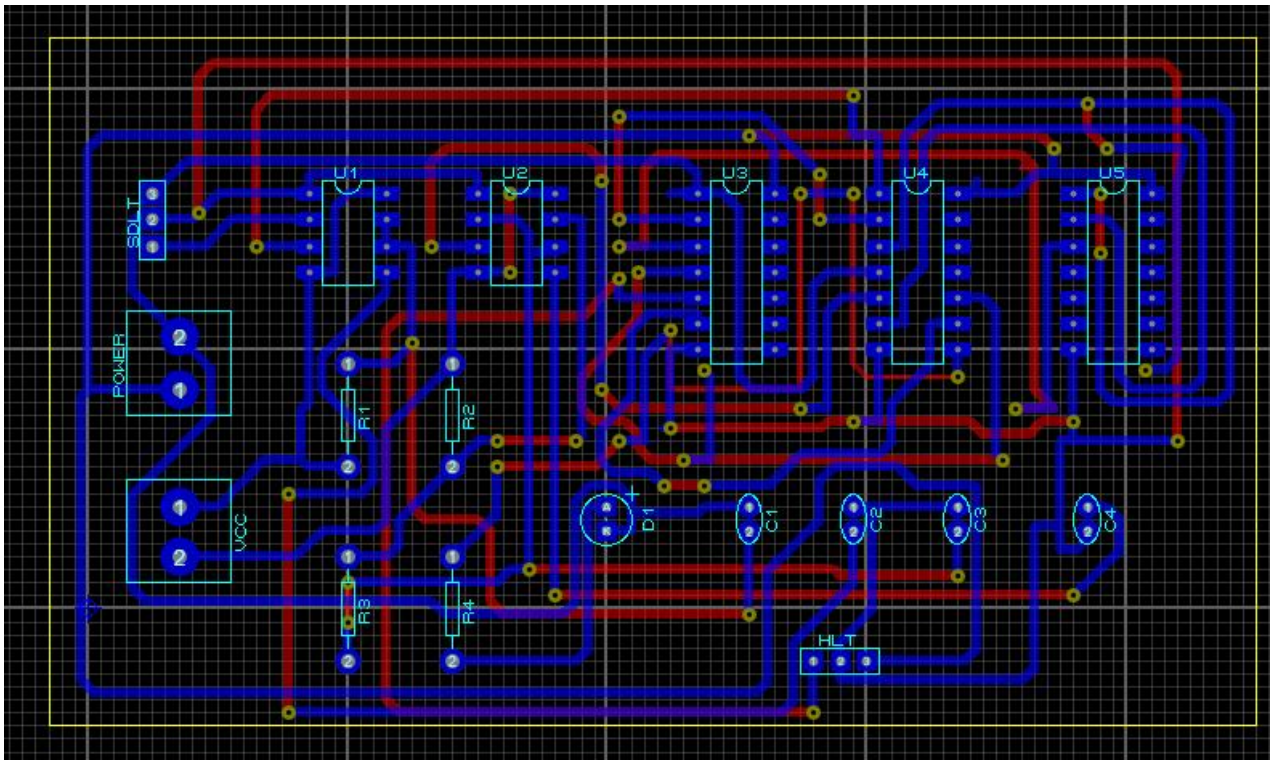

Memory Address Register
It's a 3-bit register.It stores the memory address of RAM from which data will be fetched.
This 4-bit address is obtained via the bus from the Program Counter and then stored.This stored address is sent to the RAM where data or instructions are read from.

Control bits:
Memory Address In (MI): Stores the current values of the bus into the Memory address register (MAR).

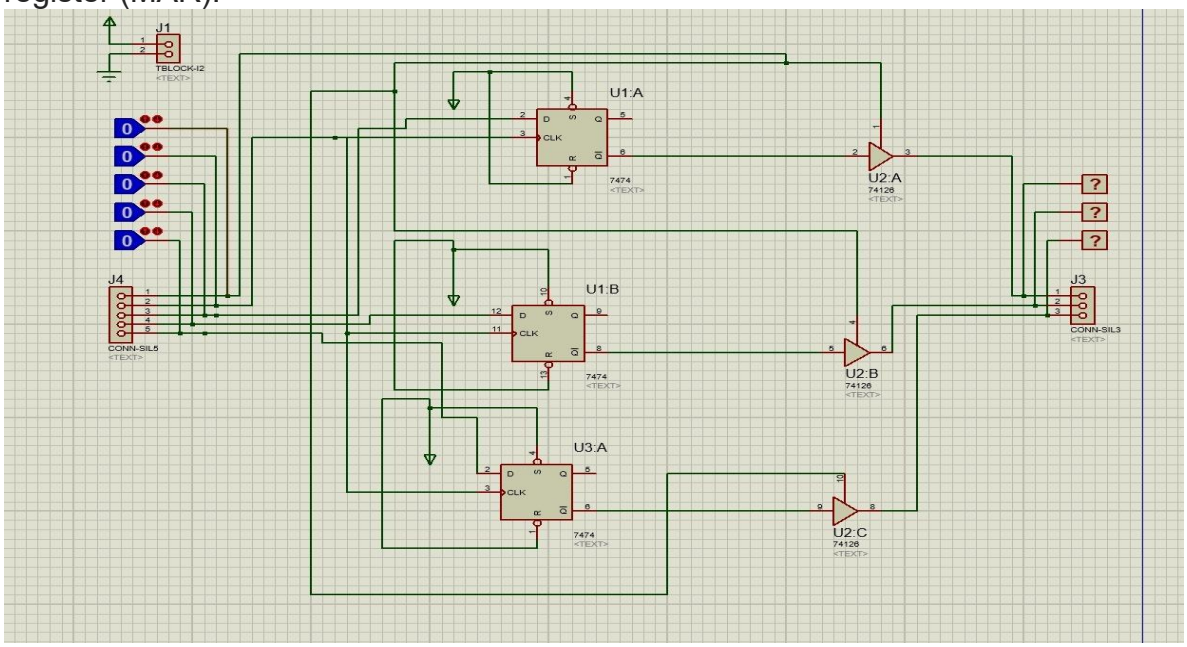

Here 3 D Flipflops are used to make memory address of 8×6 bit RAM Up to 2^ 3 =8 Memory addresses can be stored with the help of MAR. There is aMemory Adress In input
connected to tristate buffer which controls address will puss or not

Counter:
The program counter in SAP-1 contains the RAM address of the next instruction to execute. We used three 74HC03 JK flip-flop where for first JK flip-flop J and K input is connected to enable pin CE. The toggle output is connected to next flip-flop's J and K input through an AND which is connected to enable pin. For the next pin the case is same. All 3 JK flip-flop's clk input is always high to maintain input to output toggle condition. All the JK flip flop's toggle output is connected to an IC 74HC245 IC input which is a BUS transceiver which only passes information from input side to output side when CE(enable pin) value is high.

Parent Sheet:

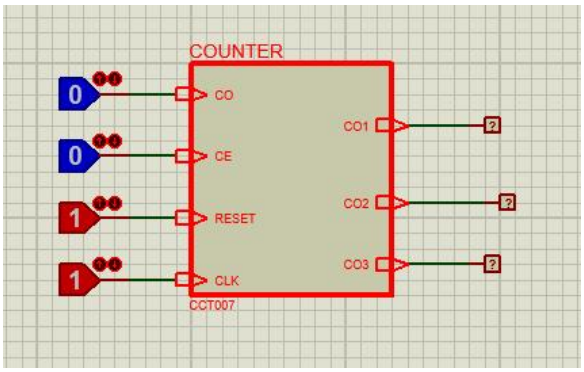

Child Sheet:

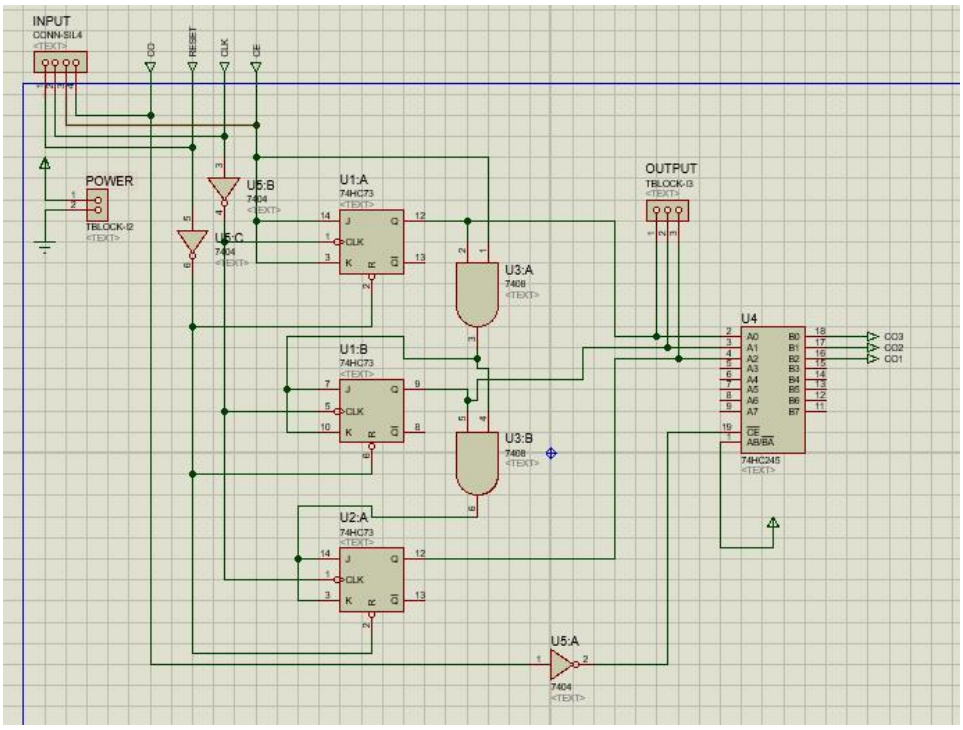

PCB:

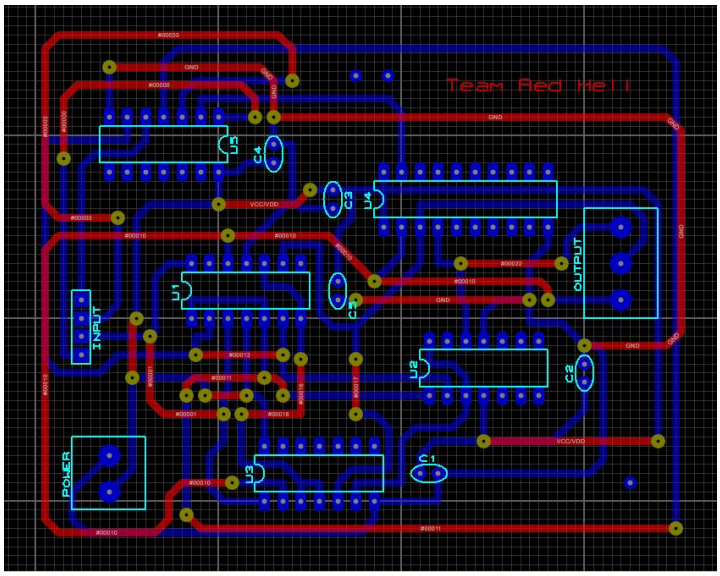

Output Register:

6 inputs and 6 outputs . 3 controlling inputs.

CLK: whenever clock pulse is high it activates the circuit. When it is 0, it holds the previous output.

OI: When OI is high output register is enabled otherwise it is not active. OI is controlled by controlling unit.

Reset: Reset clears the memory.

Output register stores the data and sends it to six seven-segment display. It is the last piece of SAP-1. It stores the ouput gained after all logical and arithmetic operations, and delivers it when given proper signals (CLK=high, OI=1).

Parent sheet:

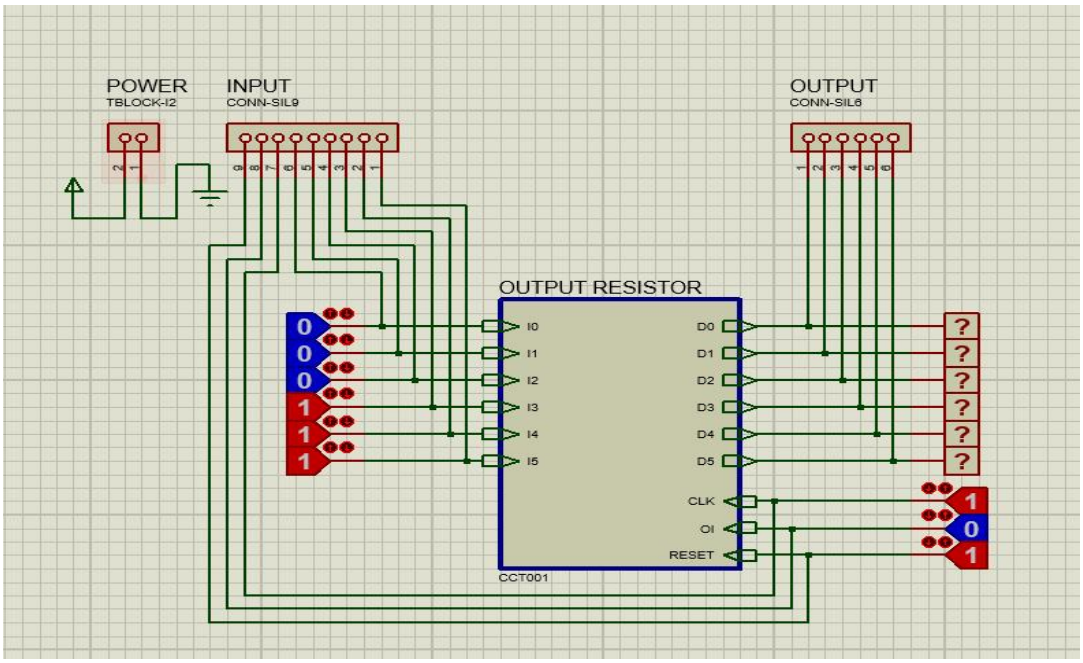

Child Sheet:

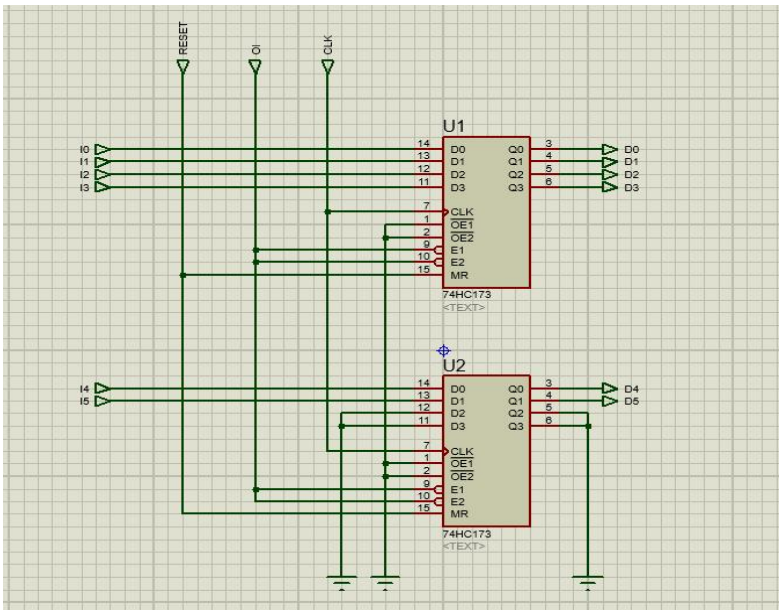

PCB:

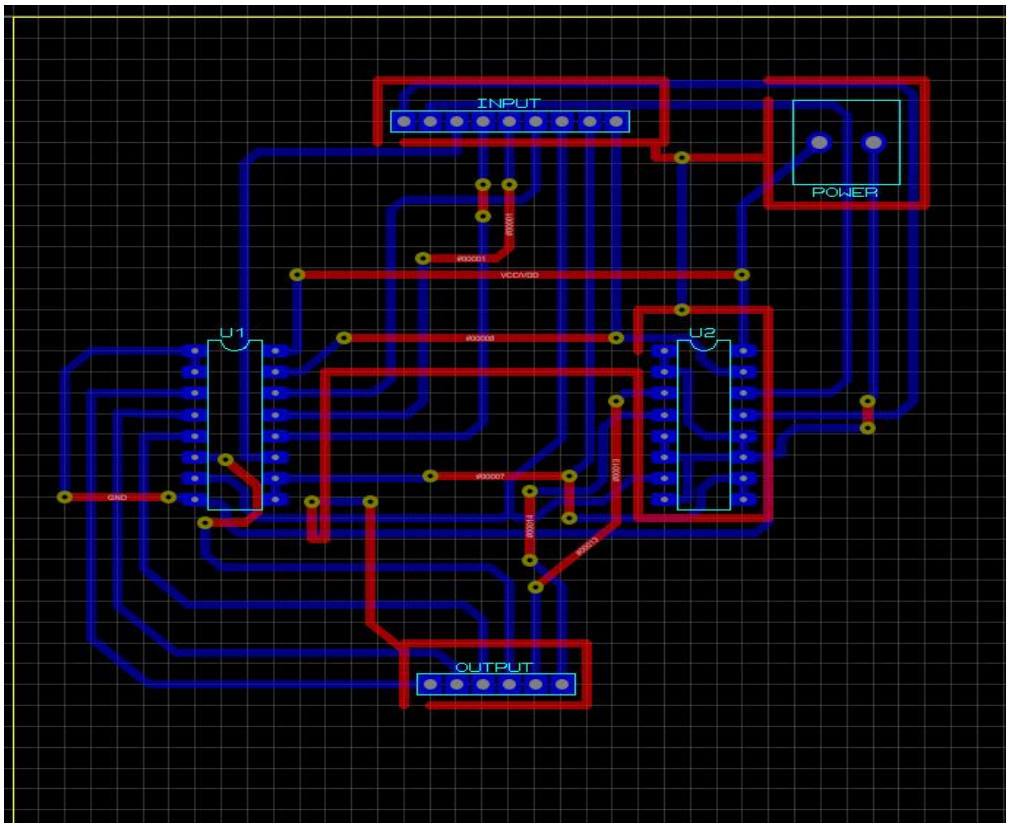

B register: Formed by taking 3 sets of input named Clock, BI, Data. Data is coming from Bus. BI comes from control sequencer and clock pulse from clock generator.B register send the output to the ALU.
We designed it using 6 D-flipflops each taking one bit data from the total 6 bit data supplied from BUS. B register is a buffer register which supplies the number to be added or subtracted from the contents of the accumulator to the adder/subtractor.
It stores data when data is available at the bus and positive clock edge is there and BI is high.

Parent Sheet:

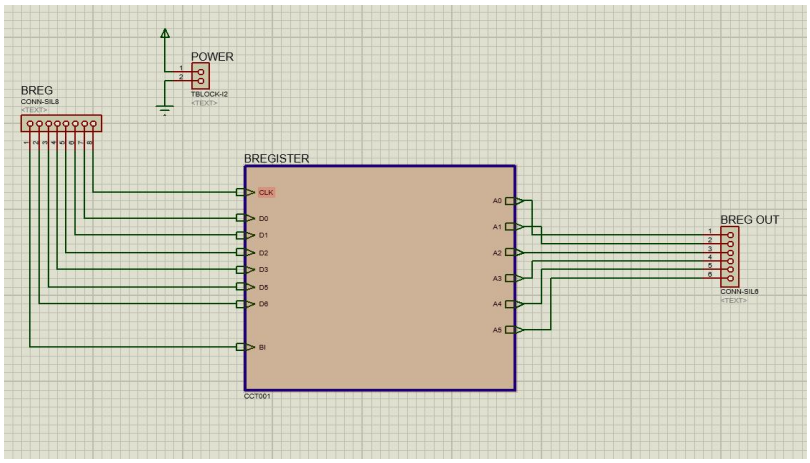

Child Sheet:

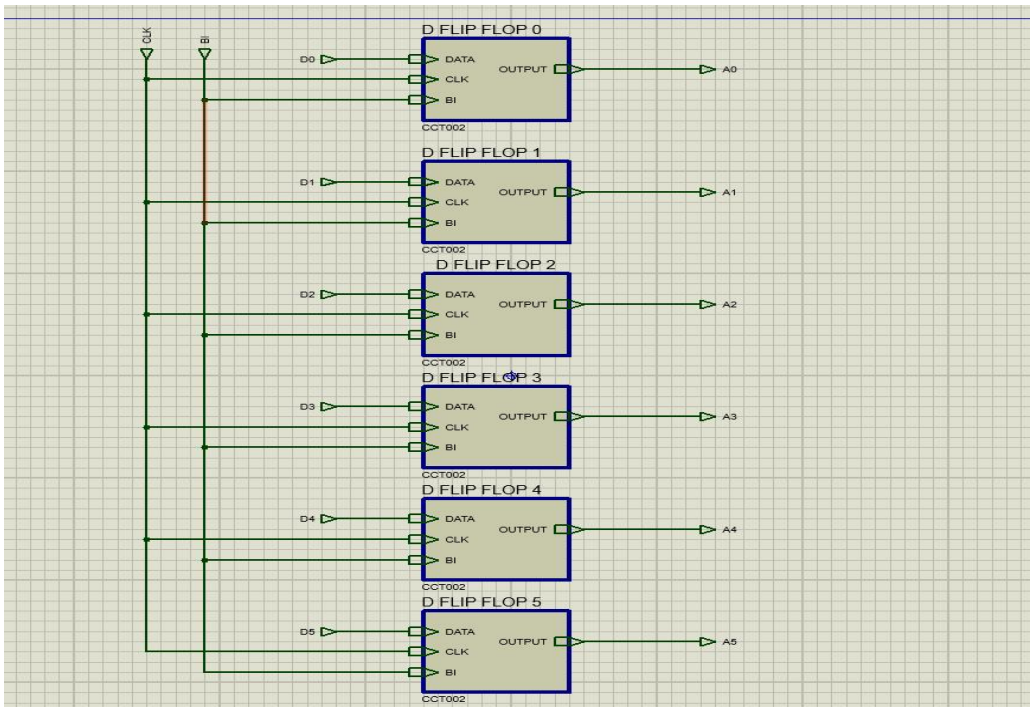

PCB:

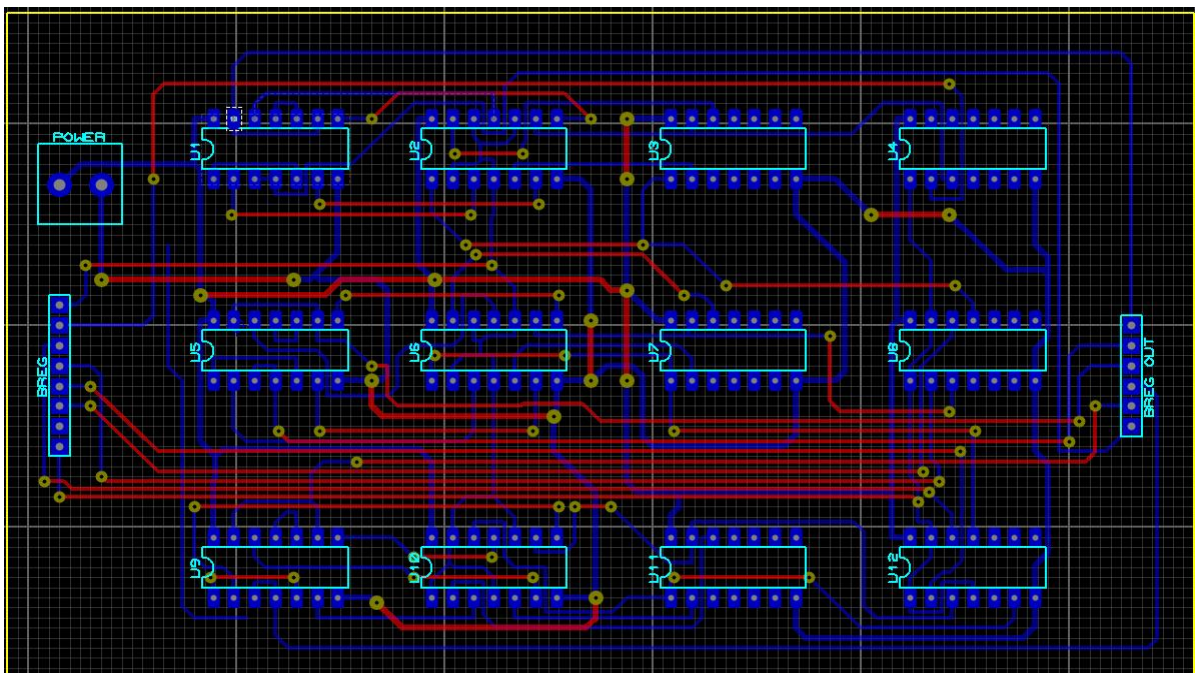

Accumulator:

It is a 8-bit buffer register that stores intermediate results during a computer run. It is designed by taking 5 sets of inputs naming data,clock,AI,reset,Ao.We get AI,Ao from control sequencer and data from bus.

The circuit is implemented by 74LS173 and 74LS365 ICs. The accumulator generates two sets of output. One 6 bit output is fed to ALU and another to the bus

Parent Sheet:

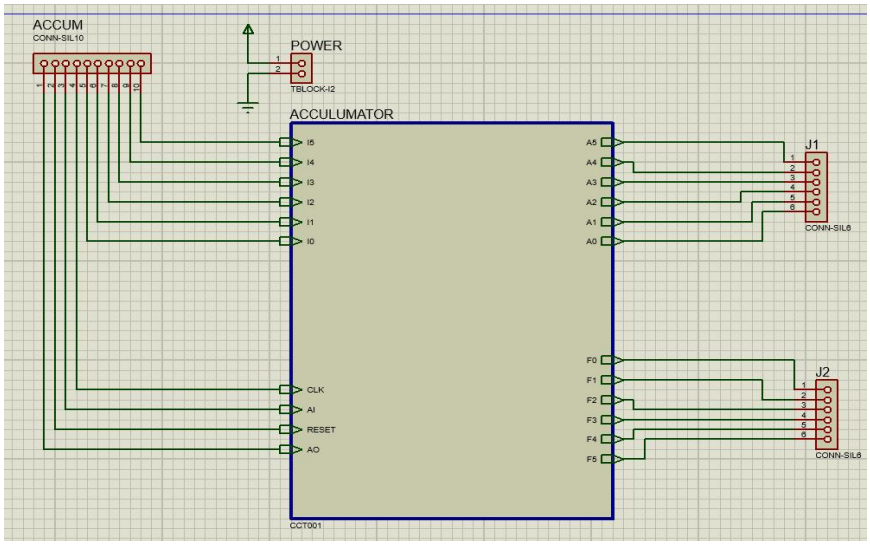

Child Sheet:

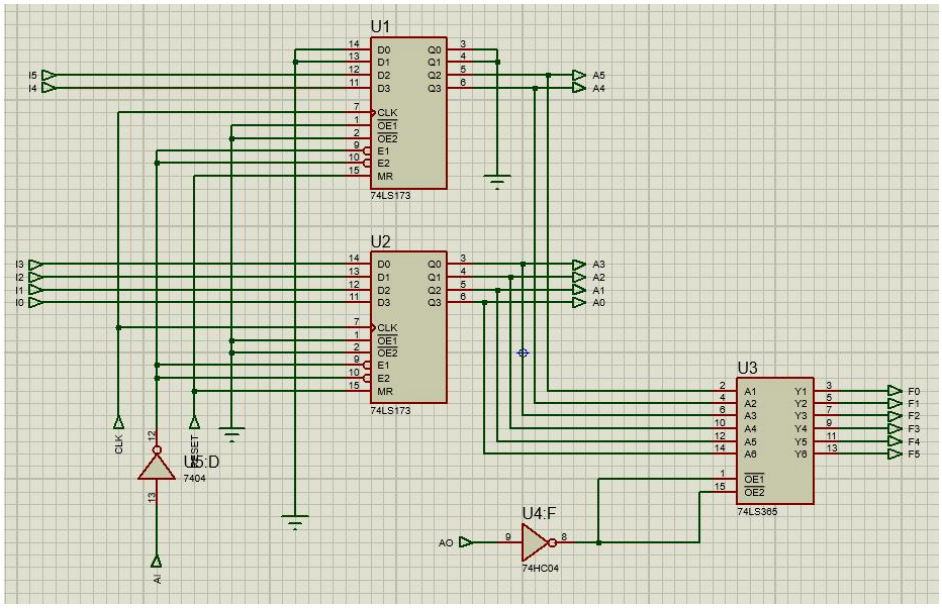

PCB:

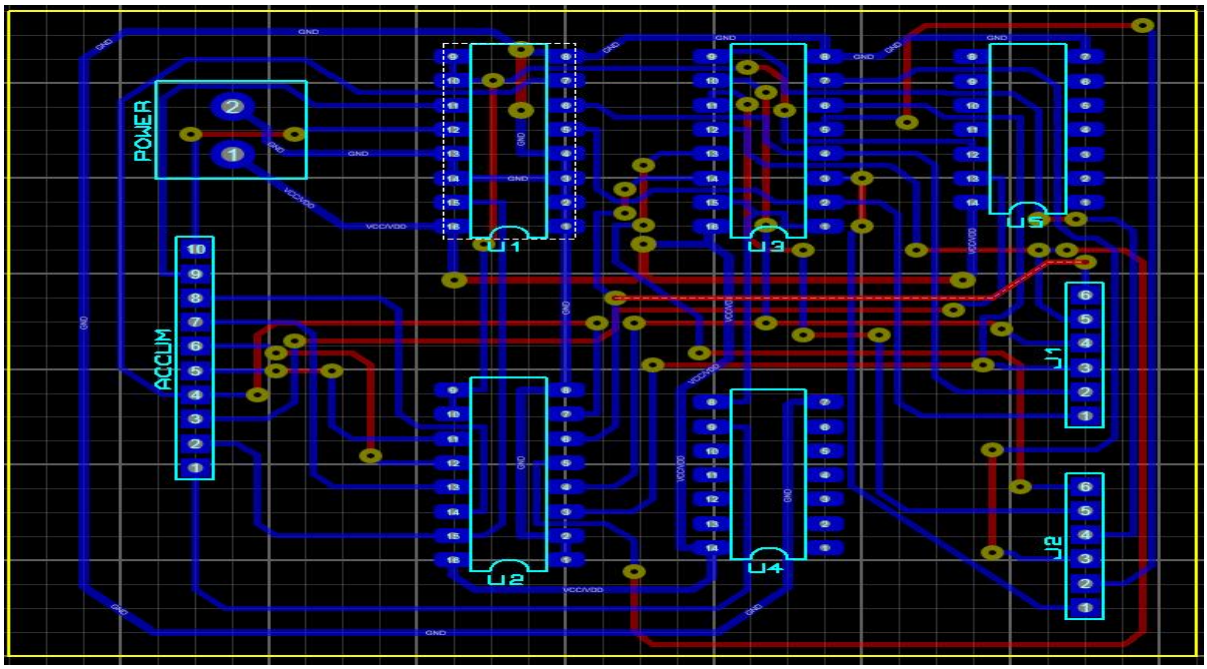

RAM:

Ram: 6 inputs were taken from input module and 3 Address inputs were address selector. Other 3 inputs are R/W, RO and CS.

6 inputs: These are taken from the operator manually.

3 ADRS inputs: Total 8 address of 3 bits are denoted by this. 6 inputs can be stored in any of these address from 000,001,010.....111

R/W: When activated read mode operates. Which referes that RAM is reading previously stored data whereas write mode enables when deactivated. It refers that RAM is overwriting the previously stored data with new inputs.

R0: RAM is controlled by controlling unit. If RO is HIGH , RAM operates, otherwise it doesn't send data to bus.

CS: CS refers to cheap selector.

8*6 RAM consists of 48 binary cells but for our design we used 7489 IC. We also used a 74HC245 bus transceiver in order to maintain the traffic of Data transmission to busbar.

Parent Sheet:

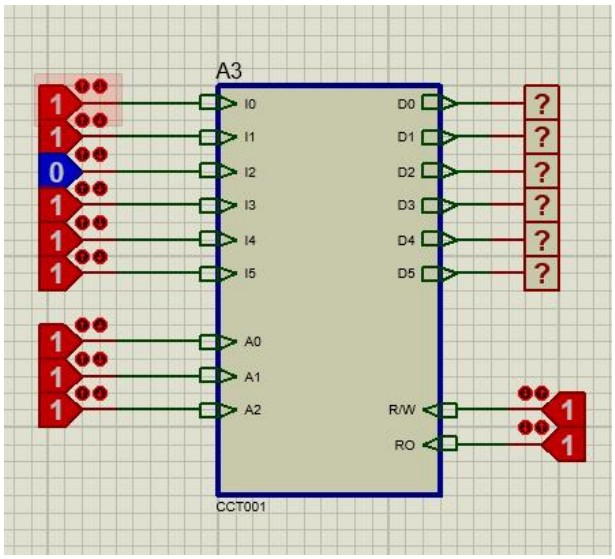

Child Sheet:

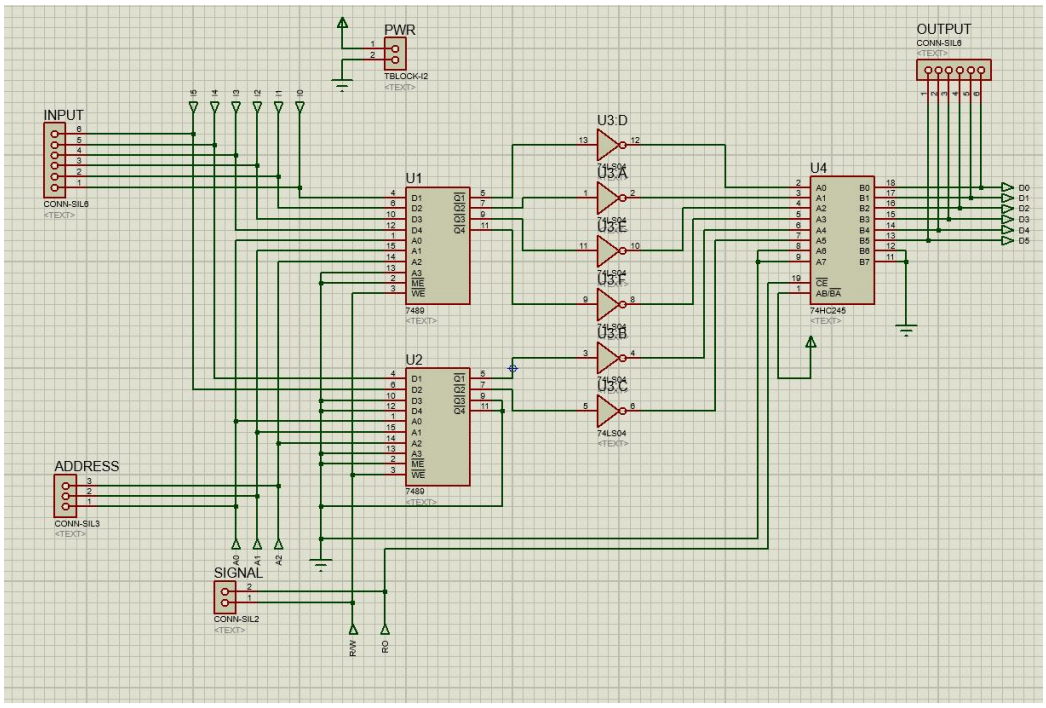

PCB:

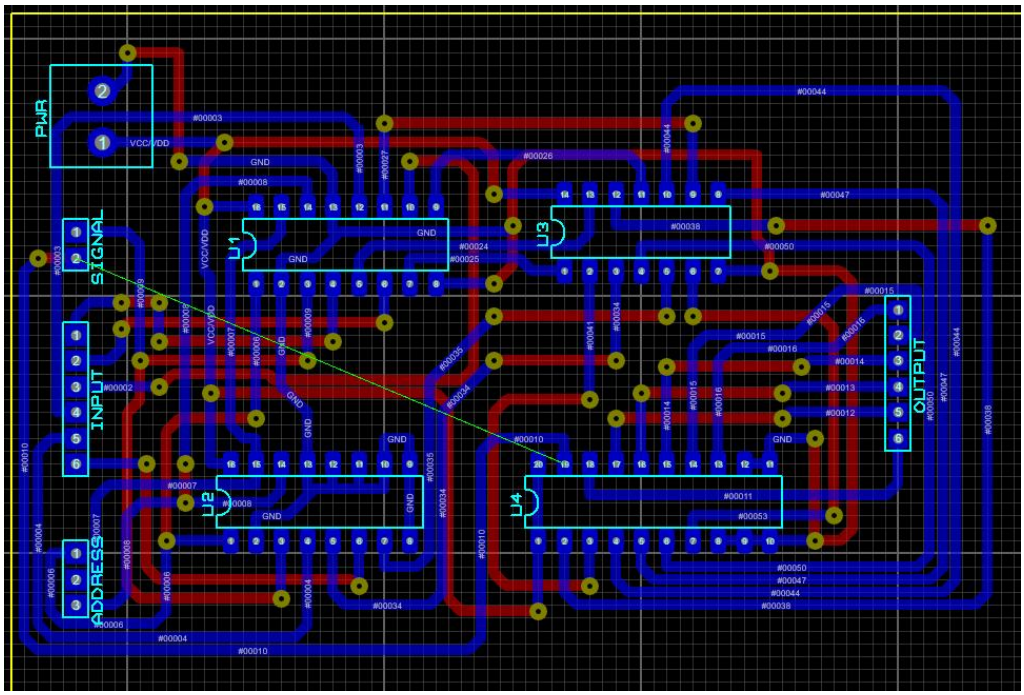

Contribution:

- Clock Pulse Generator: 210021108
- Counter: 210021337
- MAR: 210021110
- RAM: 210021217, 210021262
- Output Register: 210021217
- Accumulator: 210021230 , 210021120
- B Register: 210021230 , 210021120