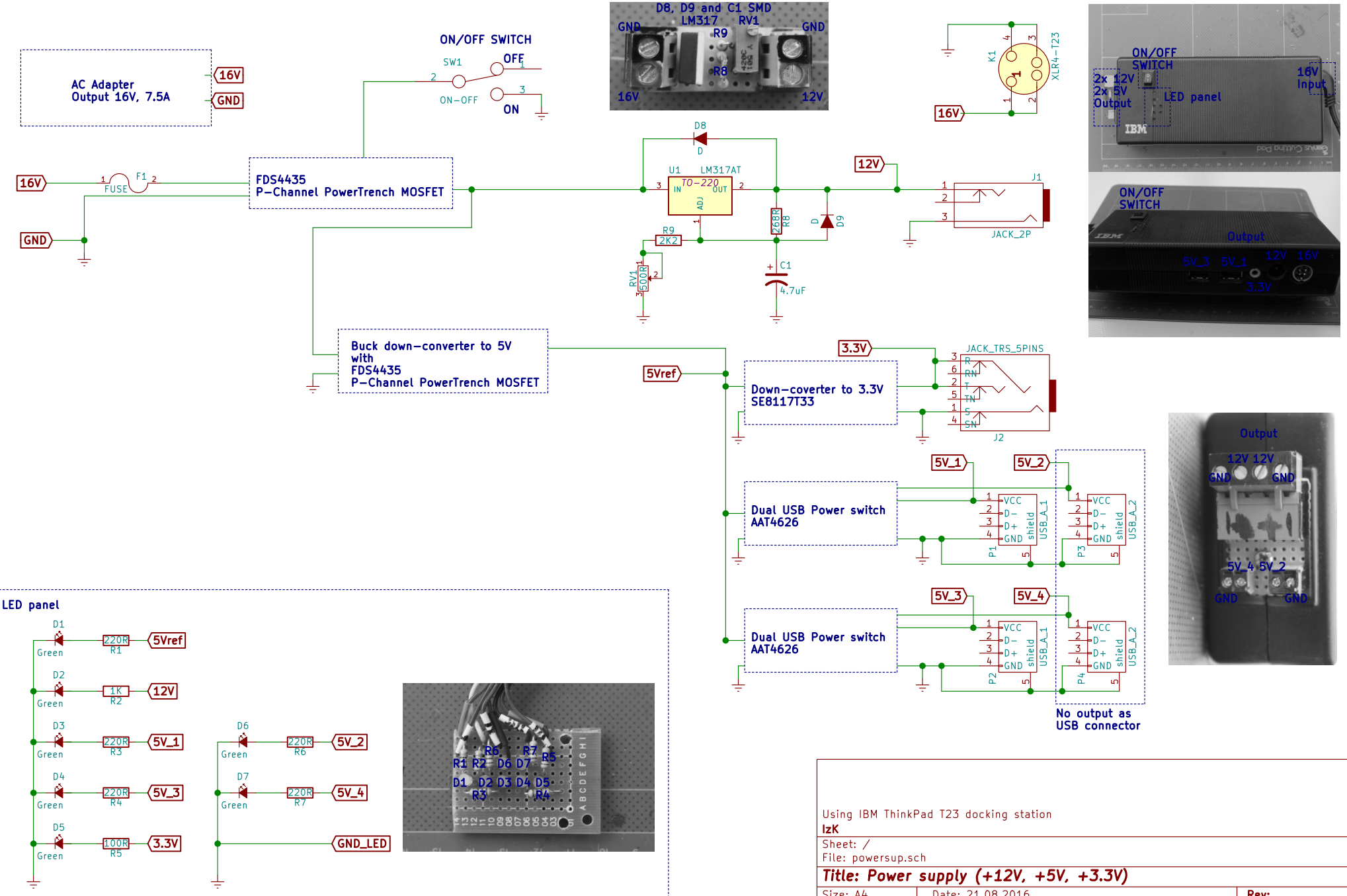
AC Adapter
Output 16V, 7.5A
16V
GND
ON/OFF SWITCH
SW1
OFF
ON-OFF
ON
D8, D9 and C1 SMD
LM317
RV1
R9
R8
GND
16V
12V
K1
XLR4-T23
ON/OFF
SWITCH
2x 12V
2x 5V
Output
LED panel
16V
Input
IBM
ON/OFF
SWITCH
Output
5V_3
5V_1
12V
16V
3.3V
FUSE
F1
FDS4435
P-Channel PowerTrench MOSFET
D8
U1
LM317AT
TO-220
IN
OUT
ADJ
R9
2K2
RV1
500R
268R
R8
D9
C1
4.7uF
12V
J1
JACK_2P
Buck down-converter to 5V
with
FDS4435
P-Channel PowerTrench MOSFET
5Vref
3.3V
Down-coverter to 3.3V
SE8117T33
JACK_TRS_5PINS
J2
5V_1
5V_2
Dual USB Power switch
AAT4626
VCC
D-
D+
GND
shield
USB_A_1
USB_A_2
P1
P3
5V_3
5V_4
Dual USB Power switch
AAT4626
P2
P4
No output as
USB connector
Output
12V 12V
GND
GND
5V_4 5V_2
GND
GND
LED panel
D1
Green
220R
R1
5Vref
D2
Green
1K
R2
12V
D3
Green
220R
R3
5V_1
D4
Green
220R
R4
5V_3
D5
Green
100R
R5
3.3V
D6
Green
220R
R6
5V_2
D7
Green
220R
R7
5V_4
GND_LED
R6
R7
R5
R1 R2 D6 D7
D1 D2 D3 D4 D5
R3
R4
Using IBM ThinkPad T23 docking station
IzK
Sheet: /
File: powersup.sch
Title: Power supply (+12V, +5V, +3.3V)
Size: A4
Date: 21.08.2016
Rev:
KiCad E.D.A. eeschema 4.0.2-stable
Id: 1/1