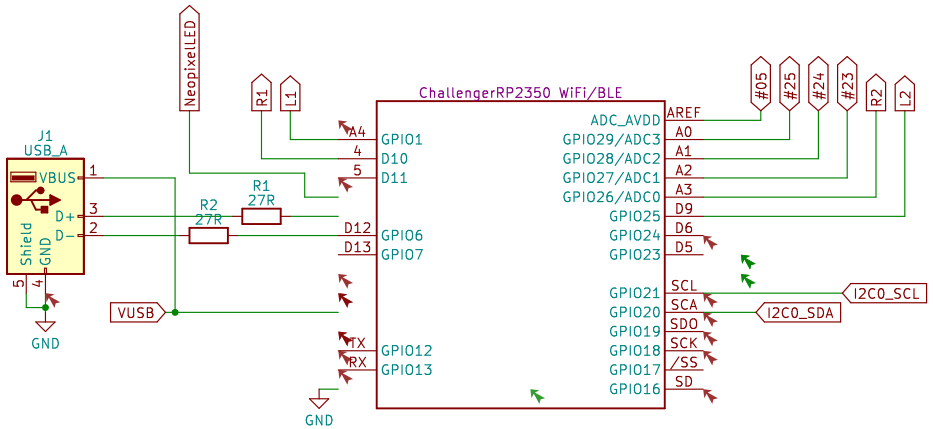

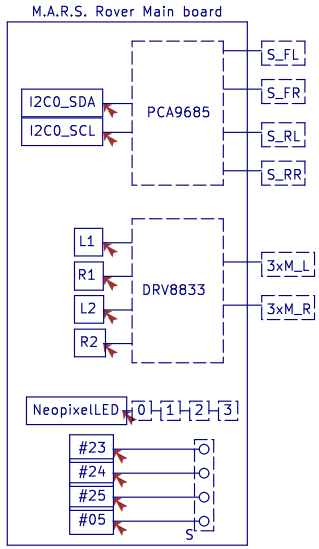

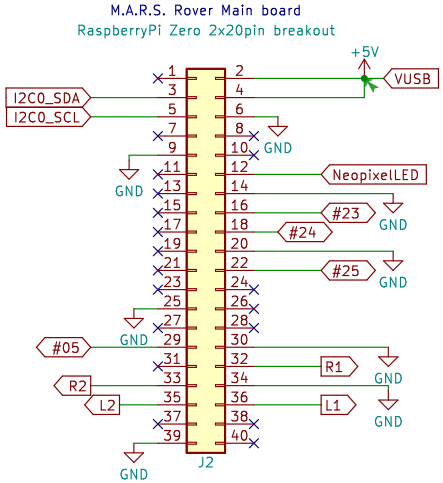

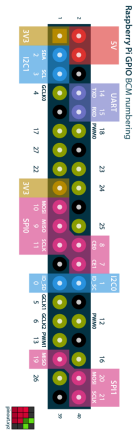

Istvan Z.K.

Sheet:
File: ChallangerRP2350−MARS.kicad_sch

Title: Challenger RP2350 WiFi/BLE for M.A.R.S. Rover

Size: A4	Date: 2025−03−14	**Rev: 1.0.4**
KiCad E.D.A. eeschema 7.0.1−0		Id: 1/1