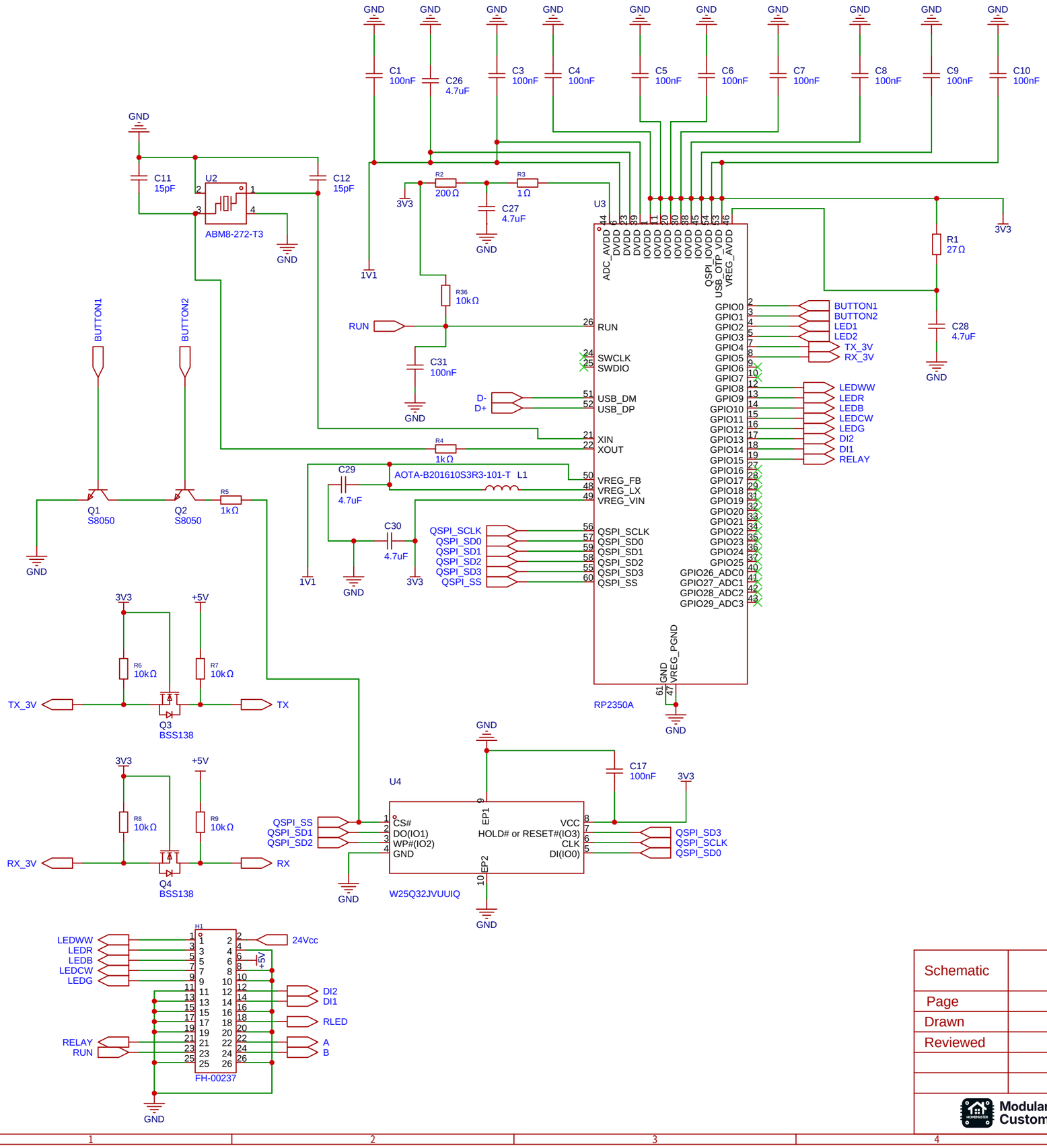

Schematic	RGB-621-R1-MCUBoard	Update Date	2026-01-24
		Create Date	2024-12-27
Page	MCU	Part Number	
Drawn		RGB-620-R1 RGB Lighting Control Module	
Reviewed			
		VER	SIZE	PAGE 1 OF 5
Modular Control Custom Logic		V1.0	A4	ISYSTEMS AUTOMATION

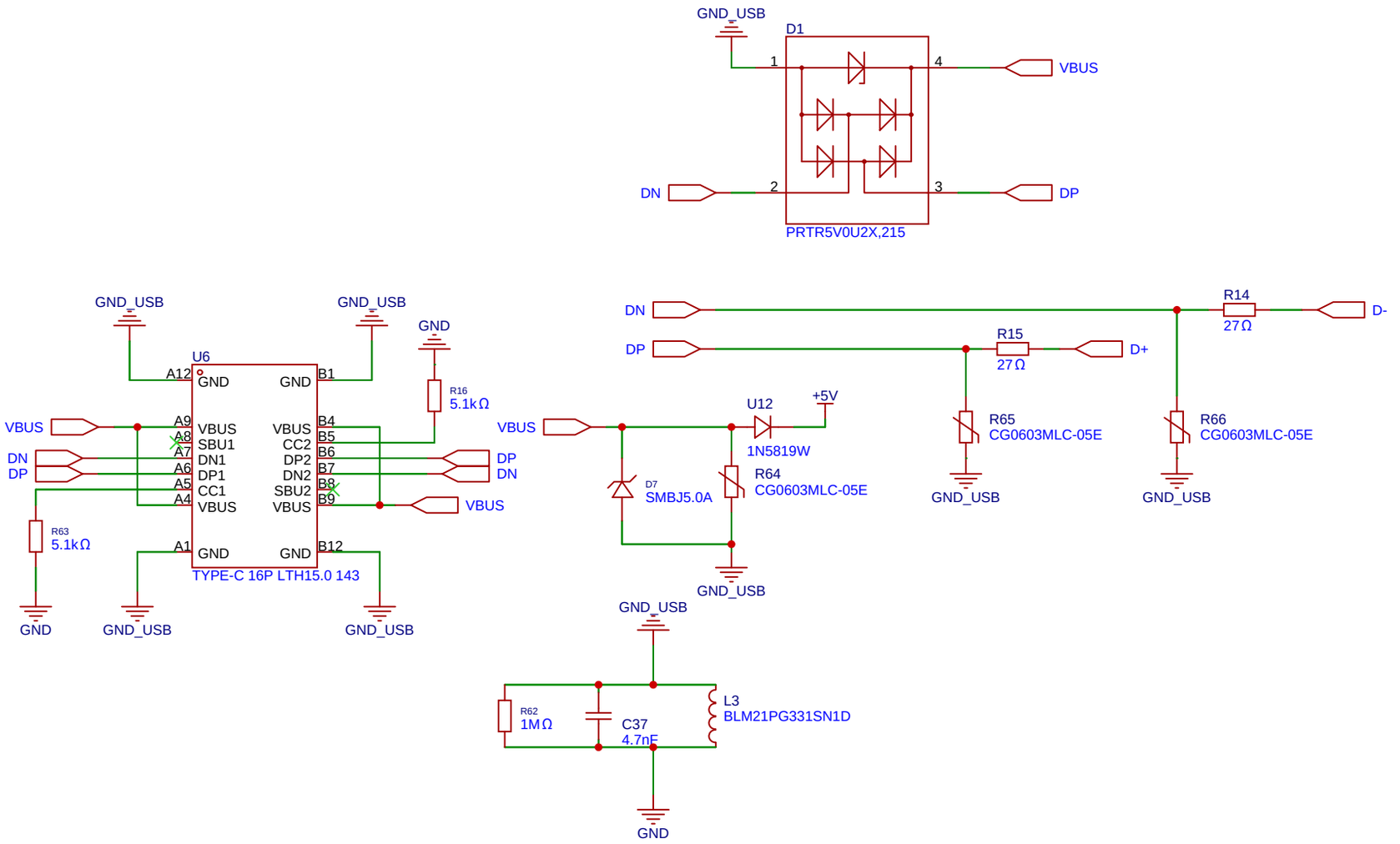

Schematic	RGB-621-R1-MCUBoard	Update Date	2026-01-10
		Create Date	2024-12-27
Page	USB	Part Number	
Drawn		RGB-620-R1 RGB Lighting Control Module	
Reviewed			
		VER	SIZE	PAGE 2 OF 5
Modular Control Custom Logic		V1.0	A4	ISYSTEMS AUTOMATION

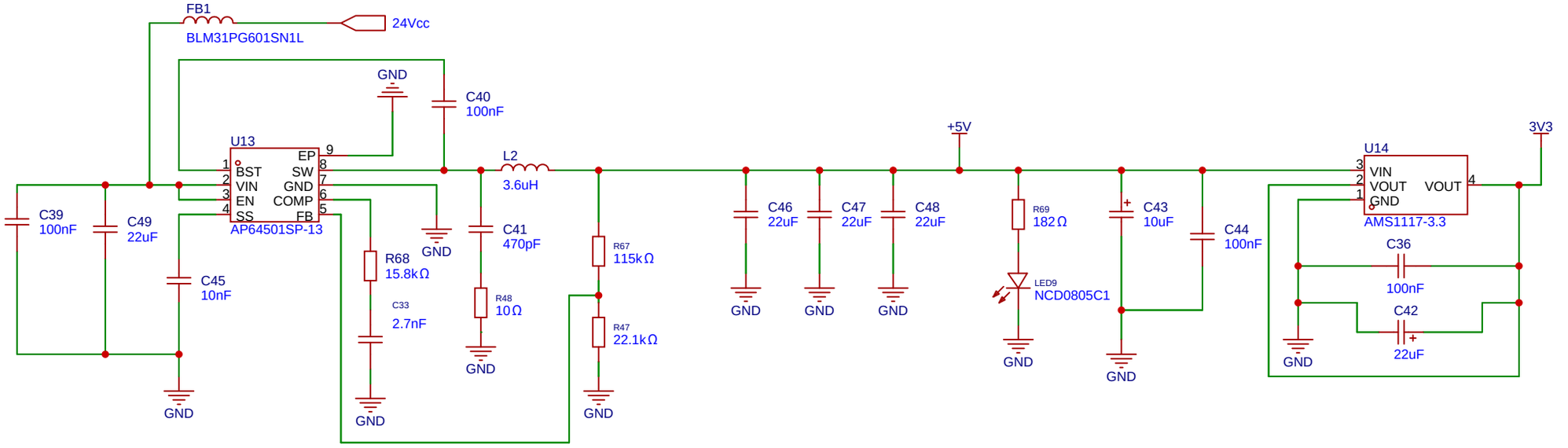

Schematic	RGB-621-R1-MCUBoard	Update Date	2026-01-10
		Create Date	2024-12-27
Page	PowerSupply	Part Number	
Drawn		RGB-620-R1 RGB Lighting Control Module	
Reviewed			
		VER	SIZE	PAGE 3 OF 5
Modular Control Custom Logic		V1.0	A4	ISYSTEMS AUTOMATION

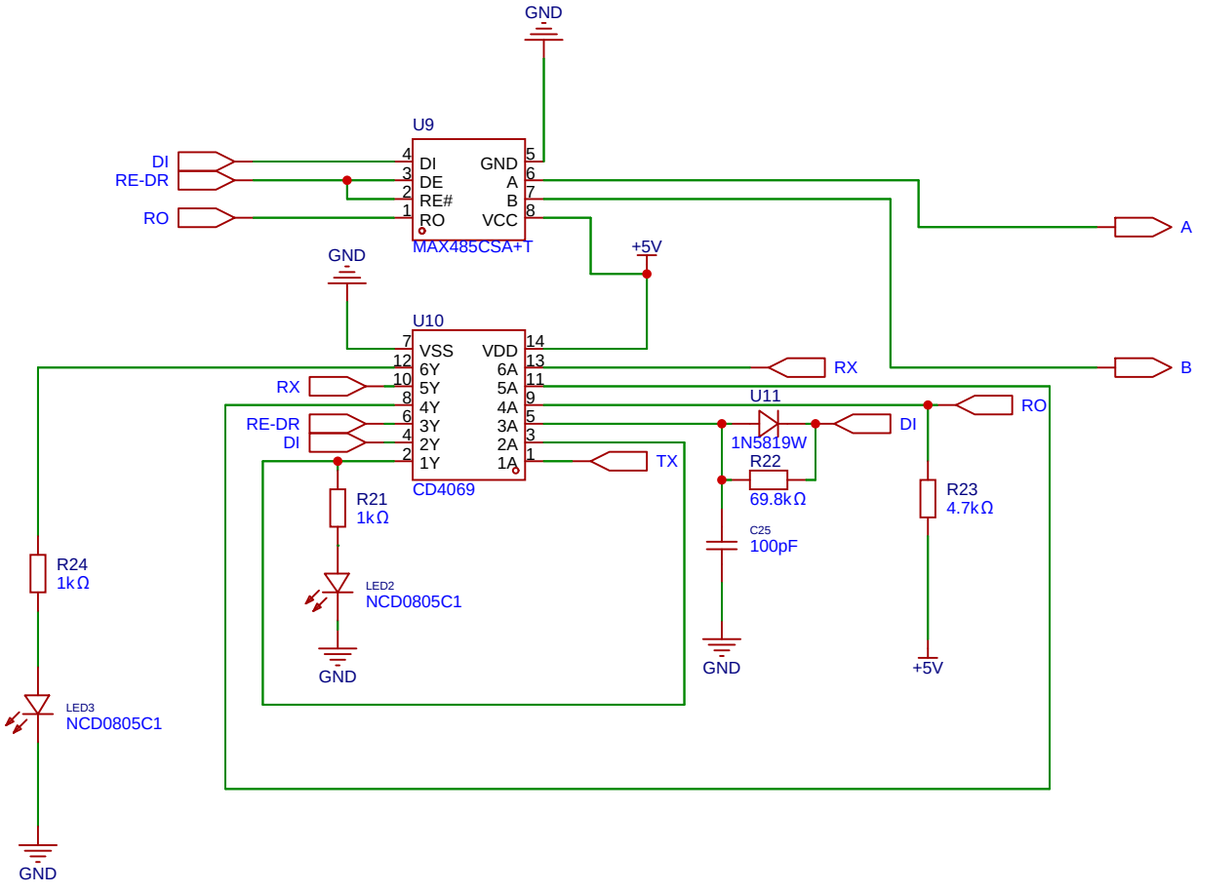

Schematic	RGB-621-R1-MCUBoard	Update Date	2025-07-25
		Create Date	2024-12-27
Page	RS485	Part Number	
Drawn		RGB-620-R1 RGB Lighting Control Module	
Reviewed			
		VER	SIZE	PAGE 4 OF 5
Modular Control Custom Logic		V1.0	A4	ISYSTEMS AUTOMATION

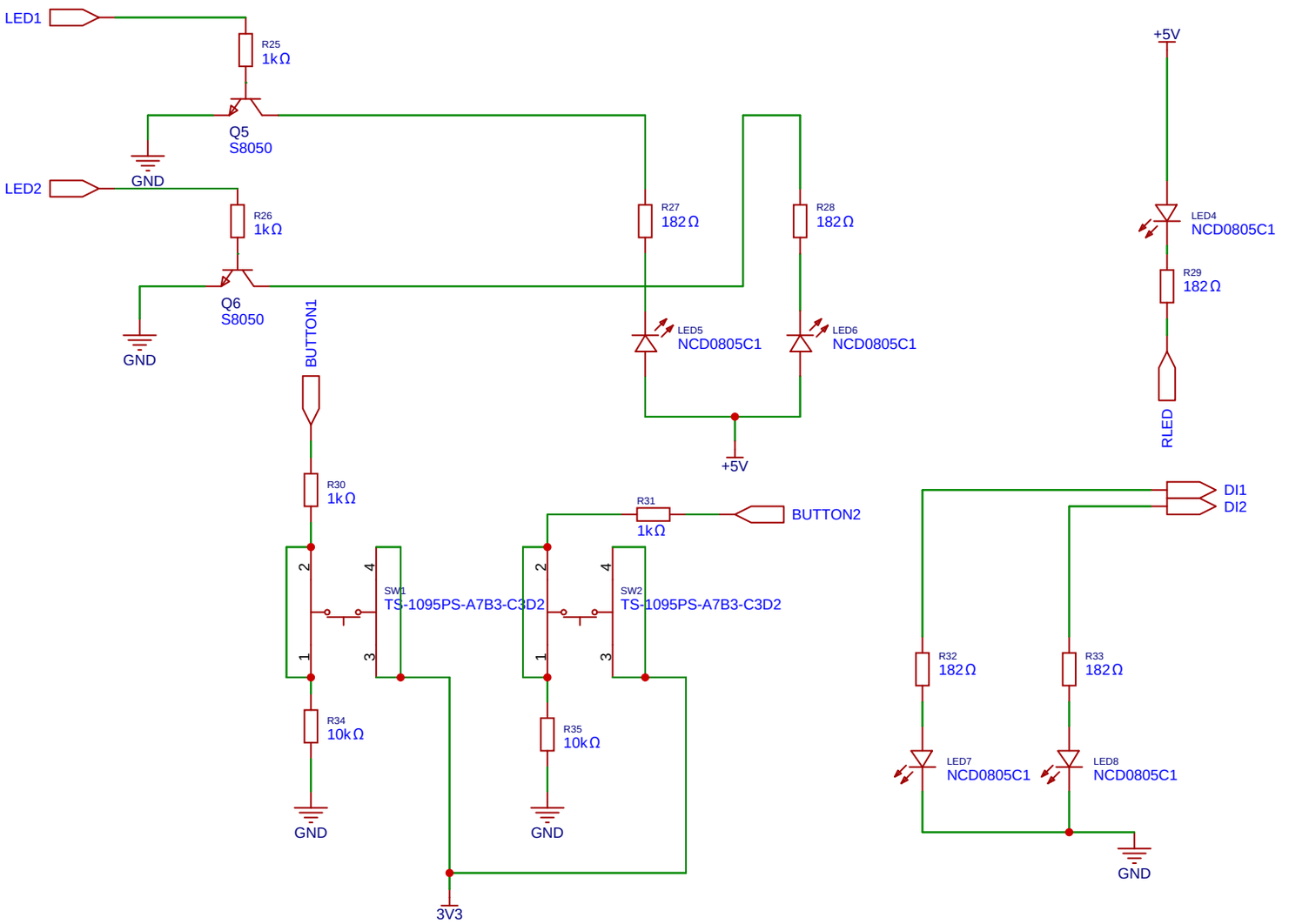

Schematic	RGB-621-R1-MCUBoard	Update Date	2025-07-25
		Create Date	2024-12-27
Page	LED,Buttons	Part Number	
Drawn		RGB-620-R1 RGB Lighting Control Module	
Reviewed			
	VER	SIZE	PAGE 5 OF 5
Modular Control Custom Logic	V1.0	A4	ISYSTEMS AUTOMATION