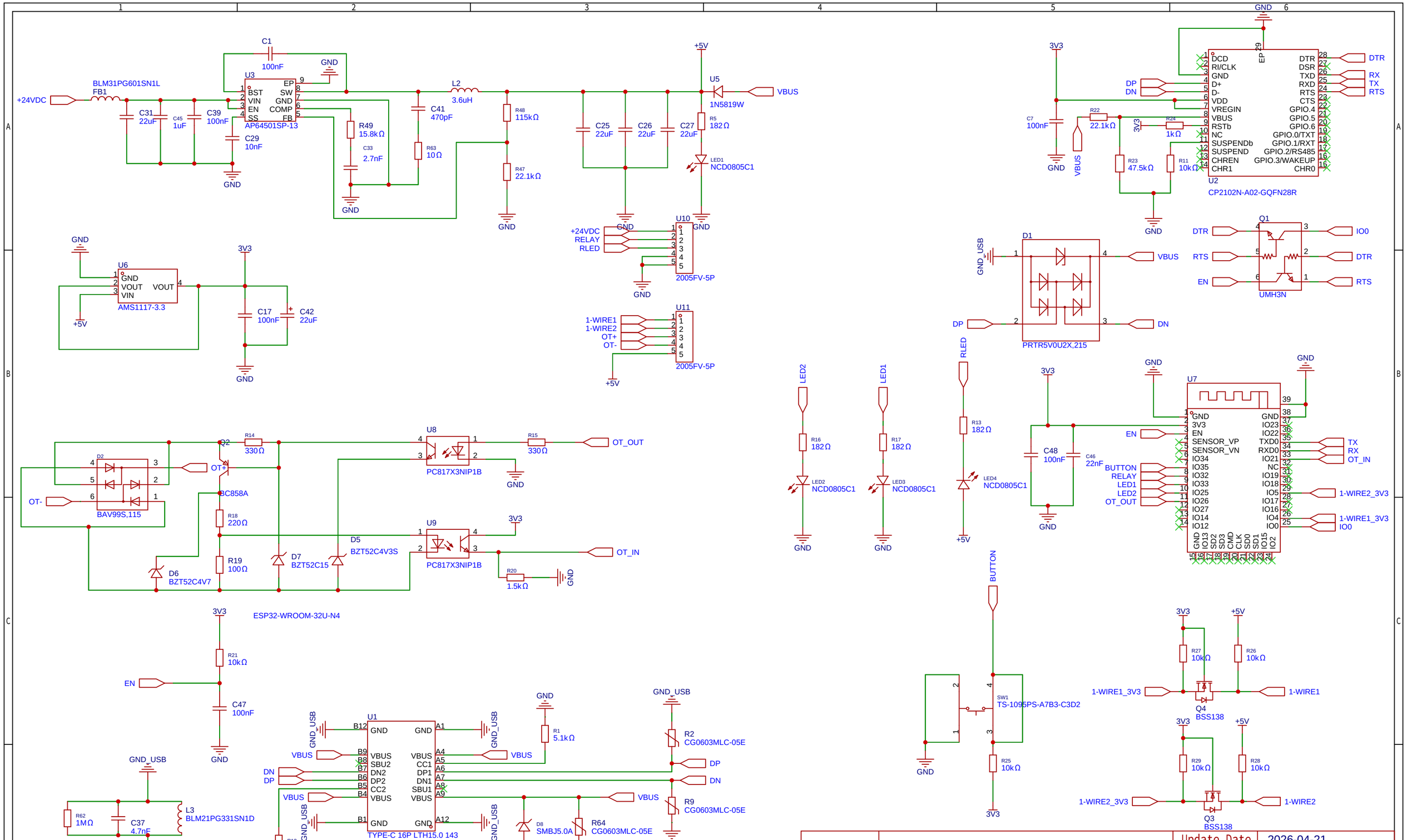

Schematic	MCU	Update Date	2026-04-21
		Create Date	2024-10-28
Page	MCU	Part Number	ISA-002
Drawn	OpenTherm		
Reviewed			
		VER	SIZE	PAGE 1 OF 1
Modular Control Custom Logic		V0.1	A3	ISYSTEMS AUTOMATION