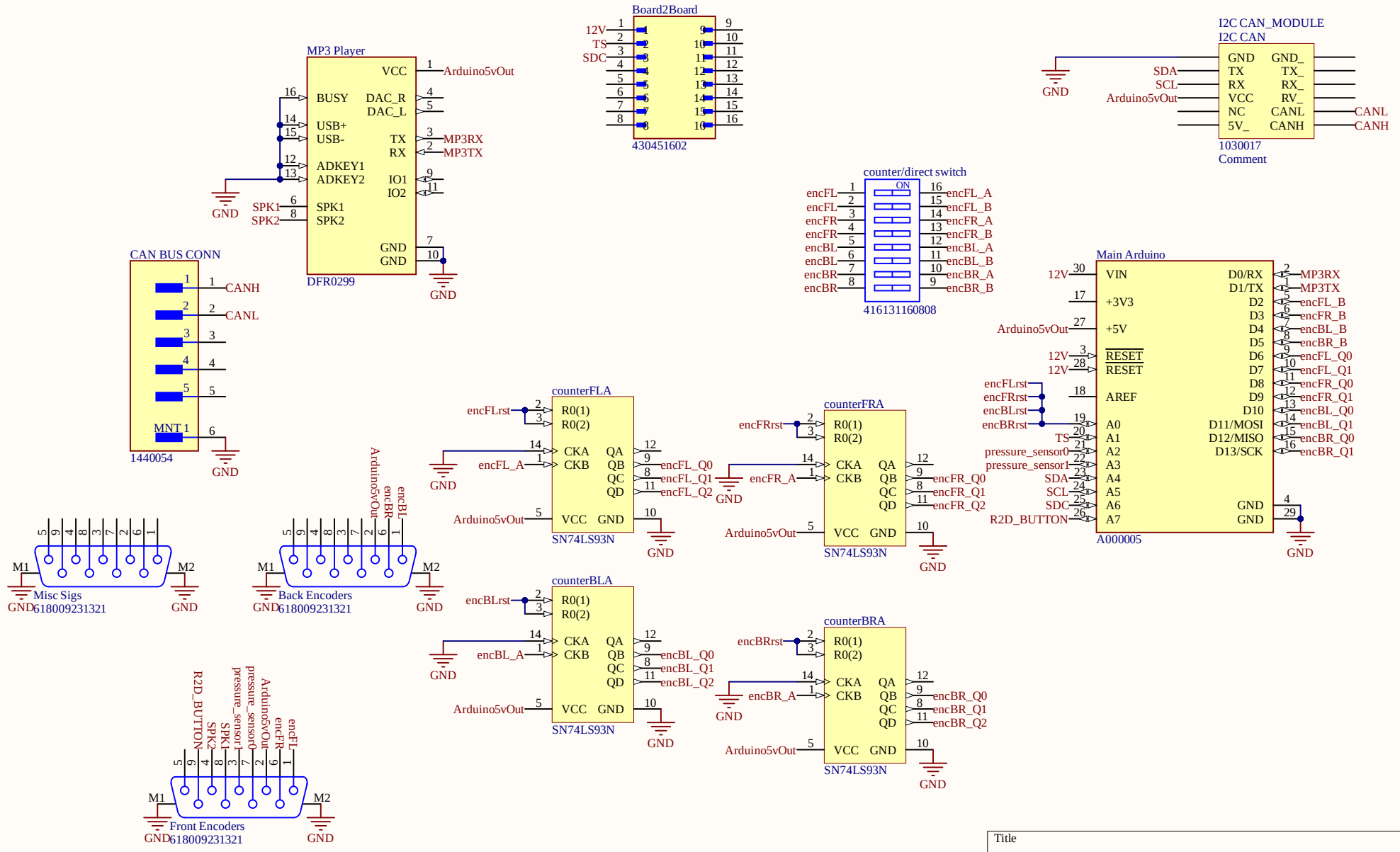

Title		
Size A4	Number	Revision
Date: 1/24/2024		Sheet of
File: C:\Users\..\Sheet1.SchDoc		Drawn By:

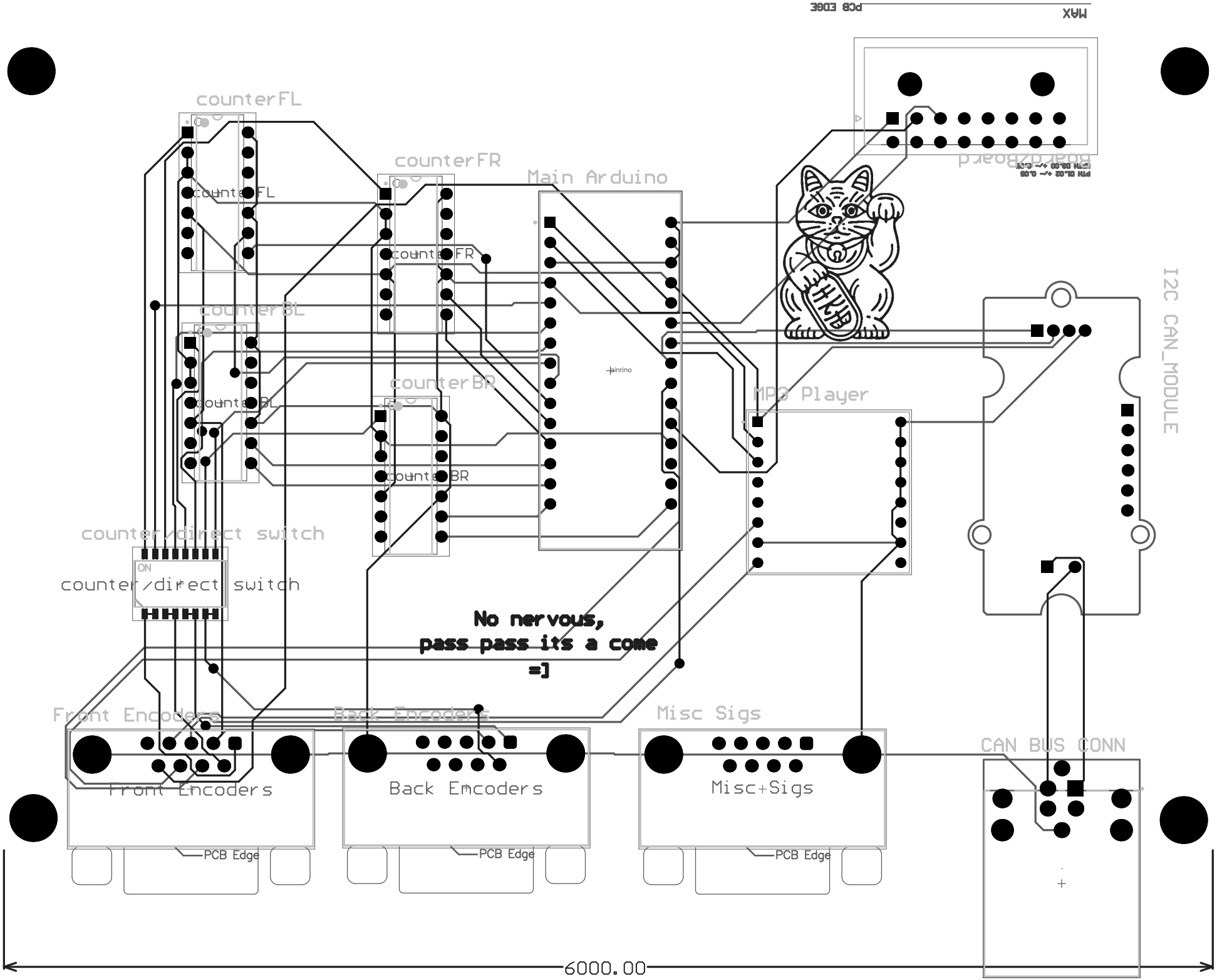
counterFL
counterFR
Main Arduino
counterBL
counterBR
MP3 Player
I2C CAN_MODULE
counter/direct switch
ON
No nervous,
pass pass its a come
=]
Front Encoders
Back Encoders
Misc Sigs
CAN BUS CONN
Misc+Sigs
PCB Edge
6000.00

Board Stack Report