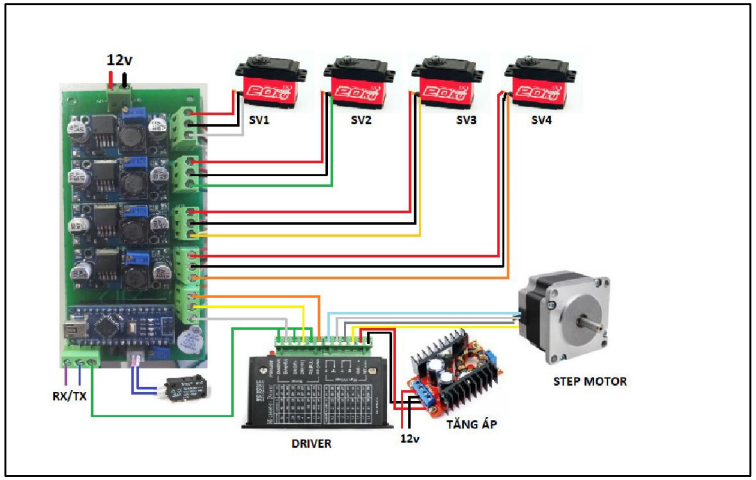

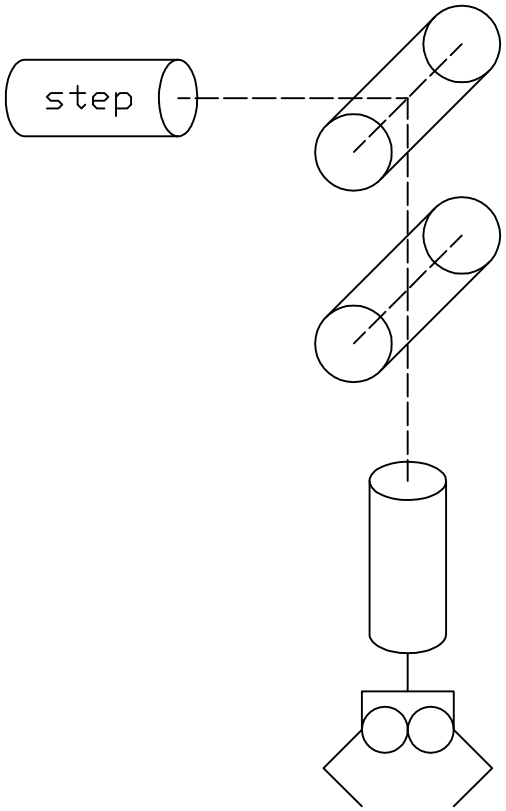

SKETCH 2