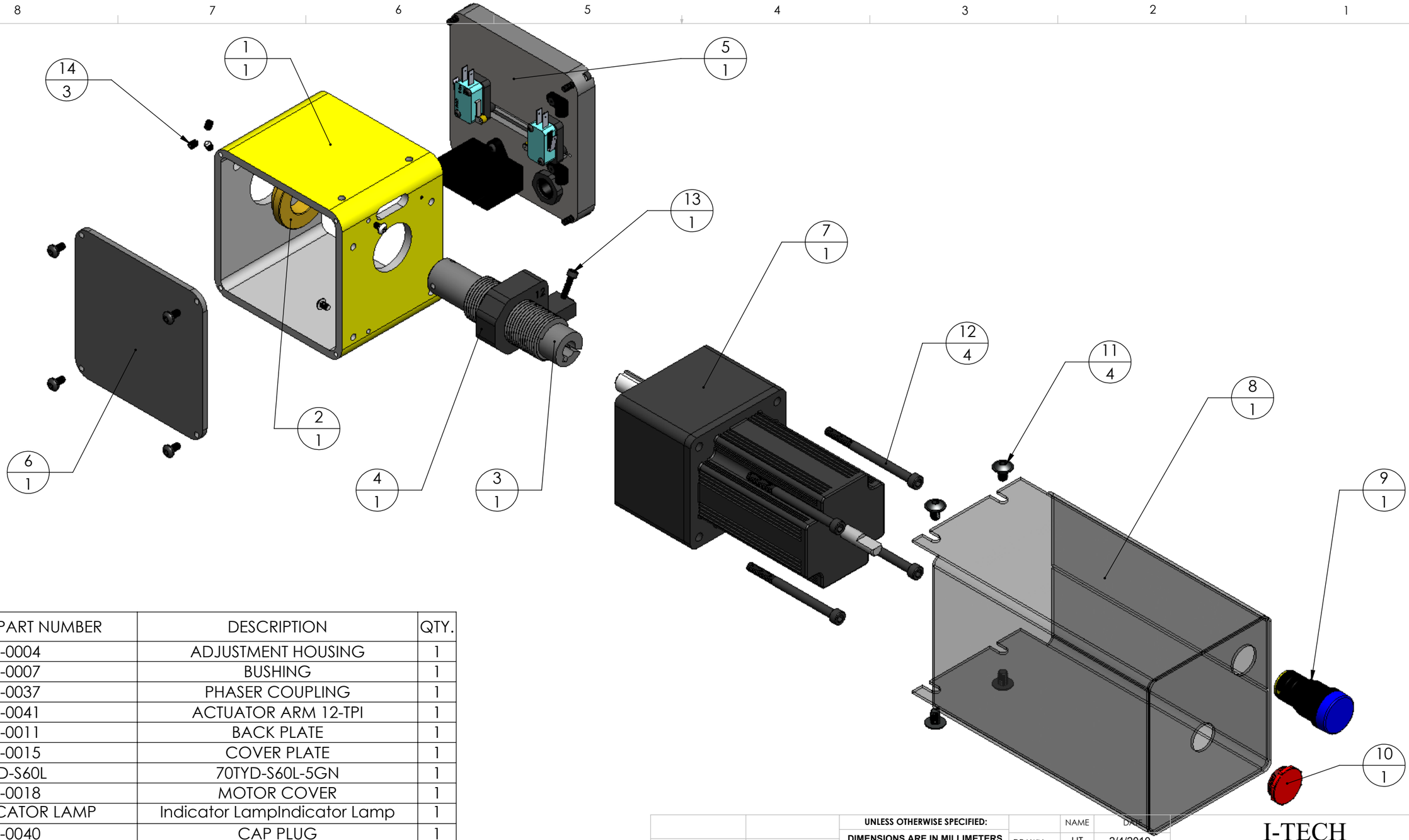

ITEM NO.	PART NUMBER	DESCRIPTION	QTY.
1	CMP-0004	ADJUSTMENT HOUSING	1
2	CMP-0007	BUSHING	1
3	CMP-0037	PHASER COUPLING	1
4	CMP-0041	ACTUATOR ARM 12-TPI	1
5	CMP-0011	BACK PLATE	1
6	CMP-0015	COVER PLATE	1
7	70TYD-S60L	70TYD-S60L-5GN	1
8	CMP-0018	MOTOR COVER	1
9	INDICATOR LAMP	Indicator LampIndicator Lamp	1
10	CMP-0040	CAP PLUG	1
11	91355A080 McMaster-Carr	Flange Button Head Socket Cap Screw Alloy Steel, 1/4"-20 Thread, 3/8" Length	4
12	91290A351COMES WITH MOTOR	Metric Class 12.9 Socket Head Cap Screw Alloy Stl, M6 Thread, 80mm Length, 1mm Pitch	4
13	91251A196 McMaster-Carr	Black-Oxide Alloy Steel Socket Head Cap Screw 8-32 Thread, 5/8" Length	1
14	91375A438 McMaster-Carr	Alloy Steel Cup Point Socket Set Screw 10-32 Thread, 1/4" Length	3

PROPRIETARY AND CONFIDENTIAL

THE INFORMATION CONTAINED IN THIS DRAWING IS THE SOLE PROPERTY OF I-TECH INC. ANY REPRODUCTION IN PART OR AS A WHOLE WITHOUT THE WRITTEN PERMISSION OF I-TECH INC. IS PROHIBITED.

NEXT ASSY | USED ON

APPLICATION

UNLESS OTHERWISE SPECIFIED:

DIMENSIONS ARE IN MILLIMETERS

TOLERANCES:
.x [.xx in. ±. 5mm [.012in.]
.xx [.xxx in.] ±.13mm [.005in.]
.xxx [.xxxx in.] ± .013mm [.0005in.]

FINISHES: .x = Std. Material Finish
.xx = Saw Cut/Deburr
.xxx = 125 Finish/Mill
.xxx = Grind

MATERIAL:

DO NOT SCALE DRAWING

	NAME	DATE
DRAWN	HT	2/4/2010
CHECKED		
ENG APPR.		
MFG APPR.		
Q.A.		

COMMENTS:

I-TECH

TITLE:

MOTORIZATION

SIZE | DWG. NO. | REV

PHASER MOTOR MODULE | 1.0

SCALE: None | WEIGHT: Kgs. | SHEET 1 OF 1