ELSEVIER

Computer Physics Communications 96 (1996) 232–246

Computer Physics Communications

CARRE: a quasi-orthogonal mesh generator for 2D edge plasma modelling

R. Marchand [a,b], M. Dumberry [a,b]

[a] *Centre Canadien de Fusion Magnétique, 1804 boul. Lionel Boulet, Varennes Qc, J3X 1S1, Canada*
[b] *INRS-Energie et Matériaux, C.P. 1020, Varennes Qc, J3X 1S2, Canada*

Received 24 November 1995; revised 11 February 1996

Abstract

A computer code is described which automatically generates a structured curvilinear quasi-orthogonal mesh of the type used in several models of transport for the edge and divertor regions in tokamak fusion experiments. The method considered works from numerically generated equilibria and from digitized parametrisations of structures and boundaries in the simulation domain. It therefore produces realistic computational meshes which allow comparisons between simulation results and experiments. The method is well adapted to the generation of meshes for a number of interesting magnetic field topologies, such as single null, connected and disconnected double null divertor geometries.

Keywords: Orthogonal mesh generation; Tokamak edge; Divertor modelling

PROGRAM SUMMARIES

Title of program: CARRE
Catalogue identifier: ADDJ

Program obtainable from: CPC Program Library, Queen's University of Belfast, N. Ireland

Licensing provisions: none

Computer for which the program is designed: DEC alpha

Operating systems under which the program has been tested: UNIX

Programming language used: FORTRAN 77 with the following extentions: (i) implicit none and (ii) do–enddo constructs

Memory required to execute with typical data: 1.2 Mwords

No. of bits in a word: 32

No. of processors used: 1

Has the code been vectorised?: no

Peripherals used: none
No. of bytes in distributed program, including test data, etc.: 420290

Distribution format: unencoded compressed tar file

Keywords: orthogonal mesh generation, tokamak edge, divertor modelling

Nature of physical problem
CARRE calculates a structured mesh with quadrilateral elements of the type used in several transport codes which simulate edge and divertor regions of tokamaks from numerically generated equilibria. The code accounts for actual machine geometry.

Method of solution
The mesh is constructed by parametrising contour curves for specified values of the poloidal flux function, and by distributing

0010-4655/96/$15.00 Copyright © 1996 Elsevier Science B.V. All rights reserved.
PII S0010-4655(96)00052-5

grid points so as to obtain a mesh which is as orthogonal as possible. From a distribution of points on an initial flux surface, the points on neighbouring surfaces are calculated iteratively by a relaxation process.

Restrictions on the complexity of the problem
The only geometries considered in CARRE are those with a divertor. Those include single null, connected double null, and disconnected double null geometries.

Typical running time
On a DEC-alpha 3000, the construction of a disconnected double null geometry with a total of 3676 mesh points takes approximately two minutes of CPU.

LONG WRITE-UP

1. Introduction

There is a rich literature in the area of two-dimensional mesh generation and, in particular, in structured quadrilateral meshes [1–5]. While general methods exist for a wide class of problems, the particular conditions encountered in fusion experiments require some very special treatments. These exceptional conditions have to do, in good part, with the strong anisotropy of transport in a magnetized plasma and with the complexity of the system to be modelled. With plasma parameters typical of present fusion experiments, for example, the electron thermal conductivity in the direction parallel to the magnetic field can exceed that in the perpendicular direction by several orders of magnitudes. As a result, it is mandatory to align the mesh with magnetic flux surfaces when modelling transport in an axisymmetric device such as a tokamak. In the absence of alignment, heat diffusion in the parallel direction would spuriously add to diffusion in the perpendicular direction, thus causing unacceptable errors [6]. To be specific, in an aligned mesh made of quadrilateral cells (or elements) every cell must have two (opposite) sides parallel to the local flux surface. In addition to alignment, it is also convenient to have local orthogonality. This has the advantage of allowing a three-cell discretisation of the parallel and perpendicular diffusion operators. It also has some desirable numerical properties, such as conservation and positive definiteness [7].

A number of computer codes have been developed over the years to model transport in the edge and divertor regions of tokamak fusion experiments. These codes are used to help to interpret present experiments, and to help with the design of the next generation machines. At present, the majority of these models are based on a finite volume discretisation of the transport equations on a structured quadrilateral mesh [6,8–14]. Other approaches have recently been proposed based on a finite element discretisation of the equations on a structured quadrilateral [15,16] or on an unstructured triangular mesh [17–20], but these more novel approaches have yet to reach the maturity level of their predecessors. The mesh generator described here is to be applied to the former family of simulation codes. It is capable of automatically generating a curvilinear mesh made of quadrilateral cells with the following properties:

(1) The mesh is locally aligned to the flux surfaces. That is, any cell will have two opposite sides parallel to the local flux surfaces.
(2) It is locally quasi-orthogonal. That is, each cell is as rectangular as possible; the only constraints being (a) the shape of the flux surfaces, (b) the proximity of other cells, and (c) the proximity of boundaries in the simulation domain.

This generation proceeds from a numerically generated equilibrium from which flux surfaces can be represented, and from an arbitrary parametrisation of the structures and boundaries encountered in the simulation domain. The mesh thus produced can be used to model actual experiments with realistic equilibria and boundary conditions. The remainder of the paper is organized as follows. In Section 2 the types of equilibria and magnetic field configurations considered are described and some general conventions are given. The method used to construct the mesh is explained in Section 3. A user's guide is given in Section 4 and example results are presented in Section 5. Finally, a summary and some concluding remarks are presented in Section 6.

2. Classification of possible equilibria and conventions

In the development of the computer code CARRE, the following general design objectives have been adopted:

(1) The code must produce meshes for tokamak divertor experiments.

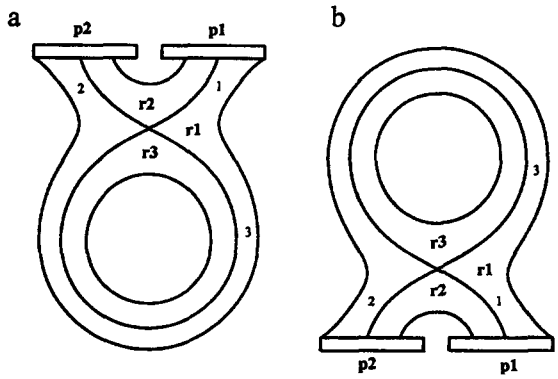

Fig. 1. Schematic representation of the single null geometry with the X point (a) above and (b) below the midplane. Indices of divertor plates and regions are indicated by numbers prefixed with p and r, respectively. Indices of segments of separatrices are indicated by plain numbers.

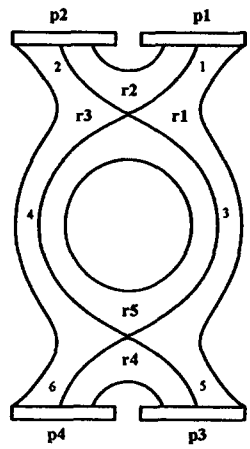

Fig. 2. Schematic representation of a connected double null (CDN) geometry. Indices of divertor plates and regions are indicated by numbers prefixed with p and r, respectively. Indices of segments of separatrices are indicated by plain numbers.

(2) It has to account for the most common magnetic field configurations encountered in actual experiments.

In this spirit, while doing the best to be as flexible as possible, no attempt has been made to write a code which is completely general. To be specific, the magnetic configurations which can be readily treated are (a) single null, (b) connected double null, and (c) disconnected double null geometries. The code is not intended to generate meshes for limiter experiments (without an X point). It is also not planned for experiments with more than two X points. The single null geometry is well known for being the most commonly used in today's experiments. This is indeed the configuration considered for ITER. It is also used on TdeV, ASDEX, D3D, JET, and JT60U, and a number of other machines. An schematic representation of this configuration is given in Fig. 1. The double null geometry, while now less fashionable, has been investigated on several machines. In this geometry there are two X points and two associated pairs of divertor plates. The simplest double null configuration is one in which the two X points lie on exactly the same flux surfaces. That is, the two X points are connected by their separatrices. This configuration is hereafter referred to as "connected double null" or CDN. Such a configuration is illustrated in Fig. 2. Yet another possibility is for the two X points not to lie on exactly the same flux surfaces. This is illustrated in Fig. 3. For obvious reasons, this configuration is referred to as "disconnected double null" or DDN. It should be clear that the CDN configuration can only be an idealisation and that, in actual experiments, the two separatrices will never lie on exactly the same flux surfaces (assuming axisymmetry). Despite this fact and the importance of disconnection on up–down asymmetries [21], it is

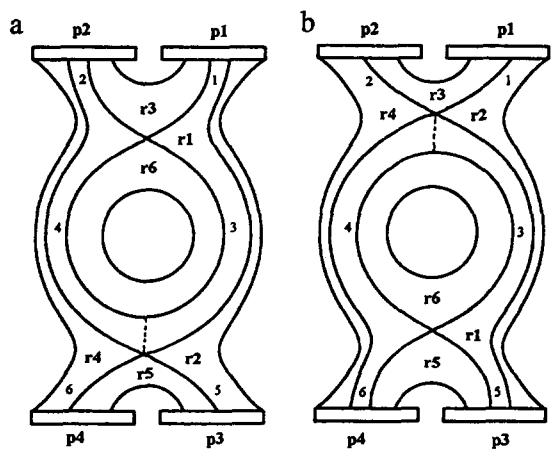

Fig. 3. Schematic representation of a disconnected double null (DDN) geometry with the inner X point (a) above and (b) below the midplane. Indices of divertor plates and regions are indicated by numbers prefixed with p and r, respectively. Indices of segments of separatrices are indicated by plain numbers.

interesting to note that most simulations of double null experiments have thus far assumed a CDN geometry. The main novelty in CARRE is its ability to generate meshes for this DDN configurations. Other mesh generators are used in modelling divertor plasmas. Among those, the better known are probably SONNET used mostly with B2-EIRENE [4,22,23], and LGRID used with UEDGE [24,25]. To our knowledge, however, CARRE is the only one which can readily generate a mesh for a disconnected double null geometry.

Given the class of equilibria which will be treated, the next step is to define some conventions concerning the elements which enter the construction of a mesh. These are

(1) The X points.
(2) The divertor plates.
(3) The segments of separatrices.
(4) The regions of the simulation domain.

In the construction of a mesh, some ordering is required for the X points. Separatrices will be fragmented into segments, and regions will be defined within the simulation domain. In ordering these various elements, the following general rules are applied: Given a list of elements, a first ordering is made from top (above the midplane) to bottom (below the midplane). When a list contains more than two elements, a second ordering is made within the elements identified as upper or lower. This ordering proceeds from right to left. By this we mean the topological right and left. For example, given a magnetic configuration and divertor plates, the "right" plate is the one which can be made to correspond to a right plate on the figures by continuous deformation of the flux surfaces. Thus it would be possible to have the (topological) right plate physically located to the left, or on the same vertical level as the (topological) left plate. This latter case is in fact encountered in the TEXT tokamak in which all divertor plates are on the same vertical cylinder. Simulation meshes have been constructed with CARRE for B2-EIRENE modelling of experiments in that machine in the various possible magnetic field configurations discussed here [26]. Without loss of generality, the axis of symmetry is hereafter assumed to be at the left of the machine's cross section. The orderings mentioned above are explained in more detail below.

(1) *X points*

This is the simplest case. In a double null geometry the first X point is the one above the midplane and the second one is the one below.

(2) *Divertor plates*

In a single null geometry the divertor plates are ordered from right to left. In a double null geometry, the order is as follows: top right, top left, bottom right, and bottom left. In constructing a mesh, every divertor plate needs to be identified as a distinct structure in the code, whether or not they are actually physically distinct structures.

(3) *Segments of separatrices*

Segments of separatrices are first identified by the X point to which they are connected. In a connected double null, the segments connected to both the upper and lower X points are identified with the upper X point. For a given X point there can be three or four segments of separatrices. Of these, the first two are the ones which connect to the nearest divertor plates. Their order follows that of these plates. There can be a single remaining segment which closes upon itself in the case of a single null. For a double null there are two more segments. They are ordered from right to left. It should be noted that in a disconnected double null one segment of the separatrix (the one connected to the inner X point) is a closed loop. For reasons which will be explained below, this segment must be divided into two by the perpendicular projection of the outer X point.

(4) *Regions*

The domain to be represented by the mesh is partitioned into regions with boundaries defined by (a) the separatrices and (b) some external boundaries yet to be defined. These external boundaries determine how far into the private region, into the scrape-off, and into the core, the simulation is to be carried. The general philosophy behind this is guided by the ordering criteria described above. Region one is at the right of the separatrix connected to divertor plate number one, or at the right of the inner separatrix in the case of a DDN. In a disconnected double null region 2 is further to the right. The next region is the one at the left of the separatrix connected to plate 1; that is, the private region connected to the first

divertor plate, and so on. The numbering of the separatrices and regions for the various cases possible is illustrated in Figs. 1–3.

3. Methodology

The general procedure used to generate a mesh is now described. It consists of four basic steps:

(1) Identification of the magnetic field configuration.
(2) Parametrisation of separatrices and outer boundaries, and partition of the simulation domain into regions.
(3) Distribution of grid points on initial flux surfaces.
(4) Mapping of grid points from one flux surface to the next.

In doing this, a suitable parametrisation of the various structures present in the vacuum vessel (divertor plates and limiters) and of the equilibrium poloidal magnetic field must be available. In practice, the equilibrium field is parametrised by the values of the poloidal flux function ψ on a rectangular r–z array, the relation between ψ and the equilibrium poloidal magnetic field being

$$\boldsymbol{B}_{\mathrm{pol}} = \frac{1}{2\pi}\nabla\varphi \times \nabla\psi. \tag{1}$$

The poloidal magnetic flux surfaces are simply calculated from contour lines of the function ψ. The structures in the machine are represented by a sequence of segments, defined by a set of r and z coordinates. Each step of the mesh construction is explained in more detail below.

(1) *Definition of the magnetic field configuration*

After reading the poloidal flux function ψ on a rectangular r–z array, the derivatives of ψ with respect to r and z are calculated, and all the points where the gradient of ψ vanishes are identified. There should be at least two such points; one for an X point, and another for the O (magnetic axis) point. In a machine such as TdeV, with magnetic coils inside the vacuum vessel, there are several points where $\nabla\psi$ vanishes. The X and O points must be selected interactively by the user. In the case of a single X point, the magnetic field configuration is defined unambiguously. When there are two X points, however, it must be decided whether these should be connected in a CDN or disconnected in a DDN. Even in a genuine CDN, numerical errors will in general yield slightly different values of ψ at the X points. Conversely, one may wish to study a DDN in which the two X points are nearly, but not quite on the same flux surfaces. For these reasons, the choice between CDN and DDN is made interactively.

(2) *Separatrices, boundaries and partitioning into regions*

Once the X points are known, all segments of separatrix need to be parametrised. This is done by calculating the contour curves which pass through these X points. The separatrices are calculated starting from their respective X point and they are constructed so as to stop at the point of intersection with a divertor plate. Divertor plates are in fact defined during this process. A divertor plate is the first structure crossed by a separatrix as one moves away from its X point. The segments of separatrix are then numbered as described above.

The next step is then to find the outer boundaries in the SOL and private regions. This is accomplished by stepping along the divertor plates, on either side of the point of intersection with a separatrix. At each step the flux surface intersecting the plate is parametrised in the r–z plane, and a check is made whether that flux surface intersects structures other than the original divertor plates or not. If not, another step is made. If so, the previous flux surfaces is taken as the outer boundary in this region. This procedure yields boundaries in the SOL and private regions. There remains to determine a boundary between the SOL and the core region. This is done by selecting the depth of that boundary (flux surface) as measured from the X point towards the O point. In the case of a connected double null, the depth is measured from the top X point. In a DDN it is measured from the inner X point. Given the separatrices and boundaries, the various regions are readily constructed as illustrated in Figs. 1–3.

(3) *Distribution of grid points on the separatrices*

The generation of a structured grid does not allow for an arbitrary distribution of points within the

simulation domain. Once grid points have been distributed, say, poloidally on a given flux surface, the distribution of points on nearby flux surfaces is largely determined. Thus the first step is to define an initial distribution of grid points poloidally. In CARRE this initial distribution is made on the various segments of separatrices. At this stage an arbitrary distribution of points can be specified on every segment separately. In the code, the following simple distribution:

$$l_{i+1} - l_i = a_0 + a_1 i + a_2 i^2, \tag{2}$$

is used, where l_i is the position of point i along a given segment, as measured from the X point. It is understood here that the first point ($i = 1$) coincides with the X point and that the last point ($i = n$) coincides with the end of the segment (on a divertor plate). The actual parametrisation of this distribution is determined by the user by specifying the number of points n, as well as the initial $(a_0 + a_1 + a_2)$ and final $(a_0 + (n-1)a_1 + (n-1)^2 a_2)$ steps. From these, and the total length of the segment, the coefficients a_0, a_1, and a_2 in Eq. (2) can be determined. This procedure is applied on every segment of separatrix individually. The only case which requires some special attention is that of a disconnected double null. Indeed, in this case, one is not free to specify an arbitrary distribution of points on every segment. This is clear from Fig. 3, where the distribution on segments 3 and 4 of the outer separatrix are seen to be related (for a structured grid) to the distribution on segment 3 on the inner separatrix. The solution here is to partition that latter segment into 3 and 3′ (see Fig. 3), the boundary between 3 and 3′ being the image point of the outer X point onto the inner separatrix.

(4) *Distribution of flux surfaces*

Flux surfaces can be distributed arbitrarily within any individual region. In the code a simple distribution of the form given in Eq. (2) is used, namely,

$$\psi_{i+1} - \psi_i = b_0 + b_1 i + b_2 i^2. \tag{3}$$

Here again, the parameters b_0, b_1, and b_2 are determined from the number n of flux surfaces, by the first $(b_0 + b_1 + b_2)$ and last $(b_0 + (n-1)b_1 + (n-1)^2 b_2)$ increment in ψ.

(5) *Mesh generation in every region*

Now that a distribution of points is given on one boundary in every region, one can proceed with the mapping of these points onto neighbouring flux surfaces, all the way to the opposite boundary. The problem reduces to that of finding the points on a neighbouring flux surface, which correspond to those on the preceding surface. As mentioned earlier, this process should generate quadrilateral elements that are "as rectangular as possible", while remaining conform to the actual (in general nonorthogonal) boundaries. There are many ways in which this can be done. In this work we adopt a pragmatic approach and define orthogonality with respect to the grid cells themselves, rather than with respect to the underlying flux surfaces. It is much simpler indeed to assess orthogonality from the cells. Moreover, when a mesh is used in a simulation, the discretisation of the transport equations involves geometrical properties of the cells, and not those of the magnetic flux surfaces used in their generation. Mathematically, the problem is formulated as follows. Given a distribution of n points on a flux surfaces, the mapping of those points onto the next flux surface is obtained by solving for the zeros of $n-2$ simultaneous functions f_i of the $n-2$ unknown node positions (two of the n positions are known to be at the extremities), with the following properties:

(1) Referring to Fig. 4, function i tends to vanish when point i is such that segment iI is as

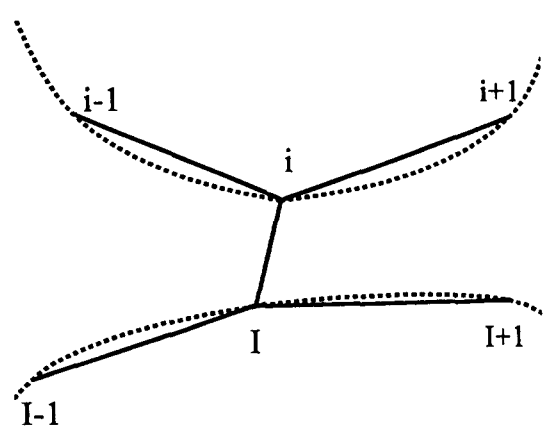

Fig. 4. Geometry considered in mapping grid points on a given flux surface onto the next one.

orthogonal as possible to segments $(i-1)i$, $i(i+1)$, $(I-1)I$ and $I(I+1)$.

(2) For a point i close to a divertor plate, there is a bias in f_i to force the distribution of points on the new flux surface to be similar to the one on the starting boundary (separatrix).

(3) There is also a bias in f_i to prevent two neighbouring points from getting poloidally too close.

This can be accomplished with functions f_i of the form

$$f_i = f_{i1} + f_{i2} + f_{i3}, \tag{4}$$

where f_{i1} vanishes when segment iI is "as orthogonal as possible" to the connecting segments. The second function f_{i2} vanishes when the distribution on the new flux surface is similar to that on the separatrix. This function must dominate near divertor plates and it must decrease in magnitude away from them. Finally, the third function f_{i3} is only important when the distance between point i and its nearest neighbours ($i-1$ and $i+1$) is less than a predetermined distance δ_0. It is important to chose f_{i1}, f_{i2}, f_{i3} consistent with one another. In particular, starting with a satisfactory distribution of grid points and displacing any point, say i, towards one of its neighbours, the changes in all three functions should be of the same sign. Moreover, the variation in every function should be monotonic. If these conditions were not satisfied, it would be possible to have multiple solutions for the zeros of f_i. Several trials have been made. One which offers a good compromise is obtained with

$$f_{i1} = \frac{\boldsymbol{r}_{i,I} \cdot \boldsymbol{r}_{i,i+1}}{\delta r_{i,i+1}} + \frac{\boldsymbol{r}_{I,i} \cdot \boldsymbol{r}_{I,I-1}}{\delta I_{I,I-1}} - \frac{\boldsymbol{r}_{i,I} \cdot \boldsymbol{r}_{i,i-1}}{\delta r_{i,i-1}} - \frac{\boldsymbol{r}_{I,i} \cdot \boldsymbol{r}_{I+1,I}}{\delta r_{I+1,I}}, \tag{5}$$

$$f_{i2} = -\left[\left(\frac{g_1}{l_i}\right)^2 + \left(\frac{g_2}{L-l_i}\right)^2\right]\left(l_i - \frac{l_{0i}}{L_0}L\right) \times \frac{1}{\delta_0 + g_1 + g_2}, \tag{6}$$

and

$$f_{i3} = \left(\frac{\delta_0}{l_i - l_{i-1}}\right)^2 - \left(\frac{\delta_0}{l_{i+1} - l_i}\right)^2, \tag{7}$$

where g_1 and g_2 are guard lengths used for the first (at $i=1$) and last ($i=n$) divertor plates, respectively. Within a guard length, the distribution of points tends to be proportional to that on the starting flux surface, $l_i \propto l_{0i}$ L is the length of the flux surface being considered, and L_0 is the length of the starting flux surface (made of segments of separatrices). The displacement of point i along the current and along the starting separatrices is represented by l_i and l_{0i}, respectively. The parameter δ_0 in Eq. (6) is the minimum distance tolerated between two neighbouring points in the poloidal direction. If in Eq. (4) δ represented the length of segment iI, the first function could simply be expressed as a sum and difference of cosines of angles between iI and neighbouring segments. While natural for defining orthogonality, this function does not give good results because it does not vary sufficiently rapidly as point i is moved far from its desired position. For that reason δ is chosen to be a representative (but fixed) value of the distance between i and I when point i is located away from divertor plates. Near divertor plates, however, δ is taken to be a somewhat larger value so as to reduce the relative importance of orthogonality in function f_i. To be specific, the following empirical expression is used for δ:

$$\delta = wL_0 + (1-w)\delta_{1,1}, \tag{8}$$

where $\delta_{1,1}$ is the distance between the first point on the flux surface and the corresponding point on the preceding flux surface. The weight factor w is near unity close to divertor plates and nearly vanishes away from them,

$$w = w_1(1-w_2) + w_2, \tag{9}$$

with

$$w_1 = \left(\frac{g_1}{g_1 + l_{0,i}}\right)^2 \tag{10}$$

and

$$w_2 = \left(\frac{g_2}{g_2 + L_0 - l_{0i}}\right)^2. \tag{11}$$

The system of equations $f_i = 0$, where f_i is defined in Eq. (4) are solved iteratively by a secant method, with a suitable relaxation factor in order to avoid overshoot and node crossing.

4. User's guide for programme CARRE

4.1. Input

Three input files are required. Ones serves to parametrise the equilibrium. One parametrises the structures within the vacuum vessel. The third file is used to specify the various distributions of flux surfaces and of grid points as discussed in the previous section.

The equilibrium is read from file `rzpsi.dat` which contains the poloidal flux function ψ on a rectangular r–z grid. A sample equilibrium file is given in Appendix A. The format is self-explanatory. The file contains lists of r, z and of psi values. In the list of psi values, the r index varies first. The beginning of each list is identified with a keyword (`r, z, $psi`) and may be terminated with a line containing `$end`.

Structures are defined in file "`structure.dat`". The actual parametrisation begins with the keyword `$structures`. Then follows a line containing a name for every structure, followed by a line containing an integer giving the number of points used to parametrise that structure. Two types of structures are supported: closed structures in which the first and the last points coincide, and open structures, for which this condition is not satisfied. Closed structures are identified by a positive number of points. For open structures the integer which defines the number of points in the structure is negative. The absolute value of this number is the actual number of points in the structure. It is sometimes convenient to edit a structure file by introducing modified structures, while ignoring old ones. A structure can be taken out of the list, or more simply, it can be commented out by adding the two consecutive characters "`n`" in the line containing its name. For example, in Appendix B the second structure would be ignored. The definition of structures must be terminated by "`$end`". It is important to note that, while open and closed structures can be defined, all divertor plates must be defined as closed structures.

The parameters which control the construction of a mesh can be specified in two ways. The first is interactively, by answering a series of questions. This is the procedure followed when an input file is not available. The second is via an input file "`carre.dat`". The content of this file is automatically generated as part of the output in file "`carre.out`". It contains all control parameters between the keywords `$parameters` and `$end`. The more convenient method of input is the second. It is faster and the file can be edited to accommodate changes or improvements in the mesh. When constructing an new equilibrium, however, the first method may prove more straightforward.

Once input has been read, some diagnostics are calculated and the user is asked whether the control parameters should be modified. This allows interactive changes in all the control parameters. A mesh is calculated when no further modification of the parameters is requested. As mentioned above, all control parameters are part of the output. They can be copied into a new input file and edited as required. A complete list of the input parameters, together with a brief description, is given in Appendix C. Some diagnostics generated by the code in order to help select the above parameters. These are briefly described in Appendix D.

4.2. Output

When running the code, two output files are produced. One "`gmeta`" file contains graphics gen-

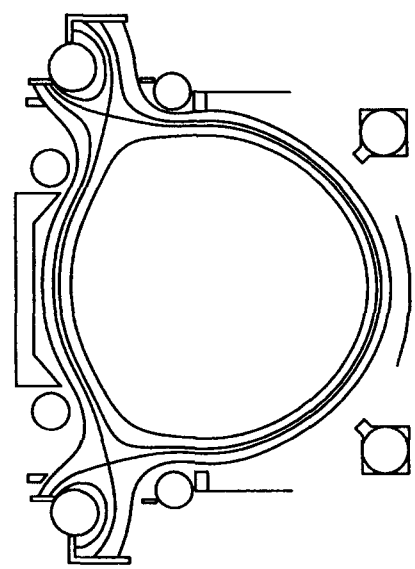

Fig. 5. Separatrices and boundaries representative of a disconnected double null (DDN) magnetic field configuration in TdeV.

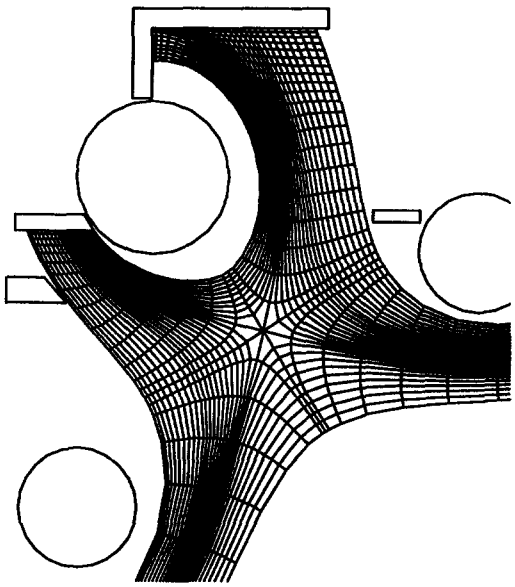

Fig. 6. Illustration of the mesh generated for a disconnected double null configuration in TdeV, using the parameters given in Appendix D.

erated with the NCAR graphics library [27]. Another "carre.out" is an ascii file containing some basic diagnostics and all the information necessary to do computation with the mesh. It is possible to run CARRE without generating any graphical output, although it is greatly recommended to visualise the mesh to assess its quality. On systems where the NCAR graphics library is not available, the program may be linked with file bidon.f, which contains dummy routines for all the graphics subroutines called by CARRE. The graphics file generated contains three frames. One shows contours where $\partial\psi/\partial r$ and $\partial\psi/\partial z$ vanish. The intersections of these curves are points where $\nabla\psi$ vanishes. This information is useful in selecting the X and O points. The second frame shows the separatrices and outer boundaries, together with the structures in the vacuum vessel. The last frame shows the mesh. Examples of the last two frames are given in Figs. 5 and 6.

The second file, carre.out is subdivided in three parts. One gives some basic diagnostics on the mesh and on the control parameters used to generate it. The second part, contained between the keywords $parameters and $end, gives all the control parameters used to generate the mesh in exactly the same format as used in the input file carre.dat. This part can be copied into carre.dat to reproduce an identical mesh (assuming that the equilibrium and the structures are the same). More appropriately, it can be edited to modify or improve an existing mesh. Finally, the third part contains the r and z coordinates of the mesh points, together with the values of the poloidal flux function and its derivatives with respect to r and z. This information is given in every region separately. In a given region, mesh points are scanned poloidally first, and then radially. In the SOL and private regions this scan proceeds from the leading divertor plate, i.e., the one with the smallest index. In the central region it proceeds from the points connected to the (inner) X point, towards the right. Then the radial scan goes from the leading separatrix toward the opposite boundary. These simple rules allow an easy understanding of the data structure in output file carre.out. A sample output file is given in Appendix D.

4.3. Complexity and limitations

The cpu time and storage required in a calculation scale approximately linearly with the number of grid points to be generated. These requirements are relatively independent of the magnetic field topology (single null, CDN, or DDN) considered.

As mentioned earlier, the code is limited to the generation of meshes for divertor tokamaks. It is not intended for limiter machines, or for machines with more than two X points. The generation of a mesh for a limiter edge plasma is, in many respects, simpler than that for a divertor geometry. Provision for this configuration could be implemented quite straightforwardly in CARRE. The absence of this configuration in the present version of the code is a result of the author's commitment to divertor geometries. It is by no means a measure of the interest and significance of limiter experiments.

In addition to the topological restrictions mentioned above, situations can be found for which CARRE will fail to produce a satisfactory mesh. In particular, the method used to generate the mesh will

work well provided that the poloidal flux function ψ be discretised on a sufficiently fine mesh. In the examples considered here, a 129 by 129 rectangular grid has been used. For a much cruder mesh, it may be necessary to interpolate ψ on a finer grid and, then, to apply numerical smoothing. This approach has been followed in Ref. [22], for example, where quadratic spline smoothing has been applied to generate a 135 by 135 grid for ψ from an original grid of 35 by 35 nodes. Difficulties may also be encountered when too many flux surfaces are required in region 1 (between the two separatrices) of DDN when that region is very narrow. When generating a mesh for a DDN, it is recommended to start with few surfaces in region 1 and progressively increase that number up to the desired resolution. Yet another difficulty arises when constructing a CDN from an equilibrium in which the values of ψ calculated at the two X points are not sufficiently close to one another. This problem is related to the coarseness of the mesh on which ψ is parametrised. It should not arise when the mesh is sufficiently fine. These difficulties with CARRE are stated here in qualitative terms only. It is difficult to state precise conditions under which the code will work and others under which it will fail. These conditions depend on the particular problem being considered. It suffices to say that the code works for all of the TdeV configurations (single null, CDN, and DDN) considered so far. It has also been applied to the same class of configurations for the TEXT experiment. Sample meshes have also been generated for the ITER geometry.

5. Example results

Fig. 5 shows the regions corresponding to a typical disconnected double null in TdeV. This DDN configuration has been constructed with balanced divertor coil currants, by displacing the magnetic axis 7 mm above the midplane. In order to extend the radial region and better illustrate the mesh, the outer divertor plates have been artificially stretched outwards. Using the parameters given in Appendix D, the mesh illustrated in Fig. 6 has been generated. Part of the output file is given in Appendix D.

6. Summary and conclusions

A computer code is described which can automatically generate structured meshes of the type used in several transport models of edge and divertor plasmas. The meshes have quadrilateral elements that are as orthogonal as possible while remaining conform to arbitrary shapes of divertor plates. The code is intended for single or double null geometries. In the case of a double null, meshes can readily be constructed for the usual (and idealized) connected double null (when the two X points are on the same flux surface) or for the disconnected double null geometry. Three input files are required. One specifies the equilibrium, one parametrises the structures within the vacuum chamber, and one gives the control parameters for generating the mesh. Two output files are generated. One contains a summary of diagnostics, together with the coordinates of every mesh point in the r–z plane, the value of the flux function and its derivatives with respect to r and z. Another file contains graphics generated with the NCAR graphics library.

Acknowledgements

One of us (R.M.) is pleased to thank Dr. H.P. Zehrfeld for a very informative conversation. We are also grateful to X. Bonnin for exercising the code with the TEXT geometry and for suggesting several improvements. The authors thank the Natural Sciences Research and Engineering Council of Canada for its financial support. The Centre Canadien de Fusion Magnétique is a joint venture of Hydro-Québec, Atomic Energy of Canada Ltd. and the Institut National de la Recherche Scientifique, in which MPB Technologies participates.

Appendix A. Sample of equilibrium file `rzpsi.dat`

Disconnected double null configuration corresponding to a vertical displacement of the magnetic axis by 7 mm above the midplane.

```
$r
nr=129
 4.80000E-01    4.85820E-01    4.91641E-01    4.97461E-01    5.03281E-01
...
 1.20754E+00    1.21336E+00    1.21918E+00    1.22500E+00
$z
nz=129
-4.45000E-01   -4.38047E-01   -4.31094E-01   -4.24141E-01   -4.17187E-01
...
 4.24141E-01    4.31094E-01    4.38047E-01    4.45000E-01
$psi
 6.79358E-02    1.17331E-01    1.20044E-01    1.22734E-01    1.25395E-01 ...
```

Appendix B. Sample of structure file `structure.dat`

```
$structures
Stretched upper right divertor plane
  7
6.1000E-01          4.0480E-01
6.1000E-01          4.5000E-01
7.1000E-01          4.5000E-01
7.1000E-01          4.4000E-01
6.1980E-01          4.4000E-01
6.1980E-01          4.0480E-01
6.1000E-01          4.0480E-01
Oblique limiter near upper right
  divertor plate $no
  7
0.6862              0.4194
0.6987              0.4288
0.7299              0.3873
0.7299              0.3595
0.7205              0.3642
0.6901              0.4031
0.6862              0.4194
Stretched lower right divertor
  plate $yes
  7
6.1000E-01          -4.0480E-01
6.1000E-01          -4.5000E-01
7.1000E-01          -4.5000E-01
7.1000E-01          -4.4000E-01
6.1980E-01          -4.4000E-01
6.1980E-01          -4.0480E-01
6.1000E-01          -4.0480E-01
...
$end
```

Appendix C. Input parameters

The following is a list of the input parameters, together with a brief description.

`repart` Specifies whether flux surfaces should be distributed according to their spacing in ψ (= 2) or according to the displacement along the leading divertor plate (= 1). The recommended value is "`repart=2`".

`pntrat` Penetration of the inner boundary along the line joining the first X point (the inner X point in the case of a DDN) to the O point. If `pntrat` is set larger than the distance between the first (inner) X point and the O point, a mesh extending all the way to the magnetic axis is generated.

`nptseg(i)` Number of points on segment of separatrix i. In distributing points on a segment, the first and last points must coincide with the beginning and end of the segment, respectively. When `nptseg(i)=2`, the two points are placed at both extremities, independently of the values of `deltpl(i)` and `deltpn(i)`.

`deltpl(i)` First step in the distribution of points on segment i. The starting point is always from the leading X point, that is, the highest one in the hierarchy.

`deltpn(i)` Last step in the distribution of points on this segment.

`npr(i)` Number of flux surfaces to be considered in region i. In distributing flux surfaces in a region, the first flux surface coincides with the boundary formed from segments of separatrices. The last one coincides with the opposite boundary. As for `nptseg`, when `npr(i)=2` the only two flux surfaces considered are the initial and outer ones. When constructing a mesh for the first time, it is sometimes convenient to make a first trial with `npr(i)=2`. This is particularly true with $i=1$ (the region between the two separatrices) in a disconnected double null geometry.

`deltrl(i)` First step used in distributing flux surfaces in region 1. If `repart=1`, `deltrl(i)` has units of lengths. If `repart=2`, it has units of ψ.

`deltrn(i)` Last step used in distributing flux surfaces in region 2. The same remark applies as above, concerning units.

`tgarde(i)` Guard length used in front of divertor plate i in the mesh generation.

`nrelax` Maximum number of steps used in the relaxing the initial (proportional) mesh to a quasi-orthogonal one by solving the system of equations $f_i=0$, where the functions f_i are defined as in Eq. (4). It is recommended to use `nrelax=200`. Using `nrelax=0` produces a distribution of points on the flux surfaces which is strictly proportional to the one specified on the separatrices.

`relax` Relaxation parameter used in the iterative solution of equations $f_i=0$ by a secant method. A small value (0.2) is recommended in order to avoid overshoot (node crossing) in the iterative calculation of the mesh.

`pasmin` Minimum distance allowed between grid points in the poloidal direction.

`ricept` Convergence criterion. This should be a small number. The default value is 10^{-6}.

Appendix D. Sample output file

The following is a sample from the output file produced when generating the mesh illustrated in Fig. 6. It is made of three parts. The first part summarises, in a tabular form, the values of the control parameters, together with some diagnostics. The second part, between the keywords `$parameters` and `$end`, gives the control parameters in the same format as used in the input file `carre.dat`. Finally, the third part gives the r–z coordinates of every mesh point in every region, with the corresponding value of ψ, and its derivatives with respect to r and z.

SEPARATRICES

#	nptseg(i)	lg(i)	deltpl(i)	deltpn(i)	dpmin	dpmax
1	21	1.7106E-01	1.5000E-02	2.0000E-03	2.0000E-03	1.5000E-02
2	15	1.0928E-01	1.5000E-02	2.0000E-03	2.0000E-03	1.5000E-02
3	41	1.1536E+00	1.5000E-02	1.5000E-02	1.5000E-02	3.6294E-02
4	21	5.7332E-01	1.5000E-02	1.5000E-02	1.5000E-02	3.6578E-02
5	21	1.6768E-01	1.5000E-02	2.0000E-03	2.0000E-03	1.5000E-02
6	15	1.1481E-01	1.5000E-02	2.0000E-03	2.0000E-03	1.5000E-02

RADIAL DISTRIBUTIONS

Distribution in psi: repart=2

region	npr(i)	width	deltrl(i)	deltrn(i)	drmin	drmax
1	11	-6.8533E-03	-4.0000E-04	-8.3000E-04	-8.3000E-04	-4.0000E-04
2	11	-1.3779E-02	-8.3000E-04	-1.7000E-03	-1.7000E-03	-8.3000E-04
3	11	5.8462E-03	4.0000E-04	7.0000E-04	4.0000E-04	7.0000E-04
4	11	-1.1829E-02	-8.3000E-04	-1.4000E-03	-1.4000E-03	-8.3000E-04
5	16	8.5708E-03	9.0000E-04	4.0000E-04	4.0000E-04	9.0000E-04

```
CENTRAL REGION: region i=6 pntrat max.=0.34105380
pntrat  npr(i)  difference  deltrl(i)   deltrn(i)   drmin       drmax
0.0600  11      1.4694E-02  4.0000E-04  2.5000E-03  4.0000E-04  2.5000E-03

GUARD LENGTH FOR EACH DIVERTOR PLATE
tgarde(1)          tgarde(2)          tgarde(3)          tgarde(4)
0.02000            0.02000            0.02000            0.02000
RELAXATION PARAMETERS USED TO CONSTRUCT THE MESH
nrelax             relax              pasmin             rlcept
50                 0.200              1.000E-03          1.000E-08

Number of X points: 2
x                      y                      psi
6.76325467E-01          2.87707398E-01        1.63408998E-01
6.76320460E-01         -2.83633053E-01        1.56552092E-01
Point O:
8.69961000E-01          6.95310000E-03        5.71360268E-01
X points are not connected.

$parameters
repart=2
pntrat=0.06000000
nptseg(1)=21
deltpl(1)=0.0150000
deltpn(1)=0.0020000
nptseg(2)=15
deltpl(2)=0.0150000
deltpn(2)=0.0020000
nptseg(3)=41
deltpl(3)=0.0150000
deltpn(3)=0.0150000
nptseg(4)=21
deltpl(4)=0.0150000
deltpn(4)=0.0150000
nptseg(5)=21
deltpl(5)=0.0150000
deltpn(5)=0.0020000
nptseg(6)=15
deltpl(6)=0.0150000
deltpn(6)=0.0020000
npr(1)=11
deltrl(1)=-0.0004000
deltrn(1)=-0.0008300
npr(2)=11
deltrl(2)=-0.0008300
deltrn(2)=-0.0017000
npr(3)=11
deltrl(3)=0.0004000
```

```
deltrn(3)=0.0007000
npr(4)=11
deltrl(4)=-0.0008300
deltrn(4)=-0.0014000
npr(5)=16
deltrl(5)=0.0009000
deltrn(5)=0.0004000
npr(6)=11
deltrl(6)=0.0004000
deltrn(6)=0.0025000
tgarde(1)=0.02000
tgarde(2)=0.02000
tgarde(3)=0.02000
tgarde(4)=0.02000
nrelax=50
relax=2.0000E-01
pasmin=1.0000E-03
rlcept=1.0000E-08
$end
x(m)            y(m)            psi(SI)         dpsi/dx         dpsi/dy
 'nreg= ' 6
 'region: ' 1
 'nppol= ' 95  'nprad= ' 11
6.35695438E-01 4.40000000E-01 1.63407958E-01  -1.26338565E-01 -2.39205299E-01
6.37449790E-01 4.39045961E-01 1.63409073E-01  -1.39970804E-01 -2.46555593E-01
...
$end
```

The meaning of the control parameters is explained in Appendix C. The diagnostics printed in the first part of the file are useful in selecting the control parameters. Their meaning is as follows.

`lg(i)` Length of the ith segment of separatrix.

`dpmin and dpmax`: Minimum and maximum steps along a given segment of separatrix, as prescribed by Eq. (2). Note that in order to have a monotonic variation of the steps from one end of the segment to the other, it is necessary to have `dpmin` = min(`deltrl`, `deltrn`) and `dpmax` = max(`deltrl`, `deltrn`).

`difference`: This variable characterises the "radial" extent of a region. When `repart=1`, it represents the distance along the leading divertor plate between the inner and the outer flux surfaces, in a given region. When `repart=2` (the recommended value), it corresponds to the difference in ψ between these two flux surfaces.

`drmin and drmax`: Minimum and maximum radial steps in the distribution of flux surfaces as prescribed by Eq. (3). The same remark applies as for `dpmin` and `dpmax`, concerning monotonicity.

`pntrat max.` Distance between the first (inner in the case of a DDN) X point and the O point. In

the case of a connected double null geometry the distance is measured from the upper X point. In the case of a disconnected double null it is measured from the inner X point.

References

[1] J.F. Thompson, ed., Numerical Grid Generation (North-Holland, Amsterdam, 1982).

[2] M. Petravic, J. Comp. Phys. 73 (1987) 125.

[3] G.P. Maddison, Double-null divertor versions of the LINDA discretisation code, Culham Laboratory report AEA FUS 168 (1992).

[4] R. Schneider, D. Reiter, H.P. Zehrfeld et al., J. Nucl Mat. 196–198 (1992) 810.

[5] P. Knupp and S. Steinberg, Fundamentals of Grid Generation. (CRC Press, Ann Arbor, 1993).

[6] M.S. Day, A Numerical Study of the Tokamak Edge Fluid Equations, Ph.D. Dissertation, University of Los Angeles (1995).

[7] D.S. Kershaw, J. Comp. Phys. 39 (1981) 375.

[8] Yu.L. Igitkhanov, A.S. Kukushkin, A.Yu. Pigarov, V.I. Pistunovich and V.A. Pozharov, Plasma Physics and Controlled Nuclear Fusion Research, 1984, Proc. 10th Int. Conf. London, 1984 Vol. 2 (IAEA Vienna, 1985) p. 113.

[9] B.J. Braams, Computational Studies in Tokamak Equilibrium and Transport, Ph.D. Dissertation, University of Utrecht (1986).

[10] N. Ueda, M. Dasai, M. Tanaka, M. Sugihara and S. Sengoku, Nucl. Fusion 28 (1988) 1183.

[11] P.J. Harbour, R. Simonini, J.A. Tagle, N. Gottardi et al., J. Nucl. Mat. 176–177 (1990) 739.

[12] D.A. Knoll and P.R. McHugh, J. Nucl. Mat. 196–198 (1992) 352.

[13] M. Petravic and G. Kuo-Petravic, Nucl. Fusion 30 (1990) 1148.

[14] M.E. Rensink, S.L. Allen, A.H. Futch, D.N. Hill, G.D. Porter and M.A. Mahdavi, Phys. Fluids B 5 (1993) 2165.

[15] R.Z. Vesey, Fusion Technology 21 (1992) 1630.

[16] R.Z. Vesey and D. Steiner, J. Comp. Phys. 116 (1994) 300.

[17] R. Zanino and W. Schneider, Contrib. Plasma Phys. 30 (1990) 127.

[18] R. Zanino, 2-fluid modeling of magnetized plasma transport in axisymmetric domains with Galerkin finite elements, Max-Planck-Institut für Plasmaphysik report IPP 5/43 (1991).

[19] R. Zanino, J. Nucl. Mat. 196–198 (1992) 326.

[20] Th. Pütz, Entwicklung eines Finite Elemente Verfahrens zur modellierung des plasmaströmung in der Randshicht fon Tokamaks, Ph.D. Dissertation, University of Düsseldorf (1993).

[21] R. Marchand, M. Dumberry, Y. Demers, C. Côté, G. Le Clair, J.-M. Larsen, X. Bonnin and B.J. Braams, Nucl. Fusion 35 (1995) 297.

[22] R. Schneider, D. Reiter, D. Coster et al., J. Nucl. Mater. 220–222 (1995) 558.

[23] H.-S. Bosch, J. Neuhauser, R. Schneider et al., J. Nucl. Mater. 220–222, 1076 (1995).

[24] M.E. Fenstermacher, G.D. Porter, M.E. Rensink et al., J. Nucl. Mater. 220–222 (1995) 330.

[25] G.R. Smith, P.N. Brown, R.B. Campbell et al., J. Nucl. Mater. 220–222 (1995) 1024.

[26] W.L. Rowan, R.D. Bengston, X. Bonnin, P.H. Edmonds, P.D. Hurwitz, E.R. Solano, H.Y.W. Tsui, J.R. Uglum and A.J. Wootton, J. Nucl. Mater. 220–222 (1995) 668.

[27] This library is available from the National Certer for Atmospheric Research, Scientific Computing Division, P.O. Box 3000, Boulder CO 80307-3000, U.S.A., E-mail: scdinfo@ncar.ucar.edu.