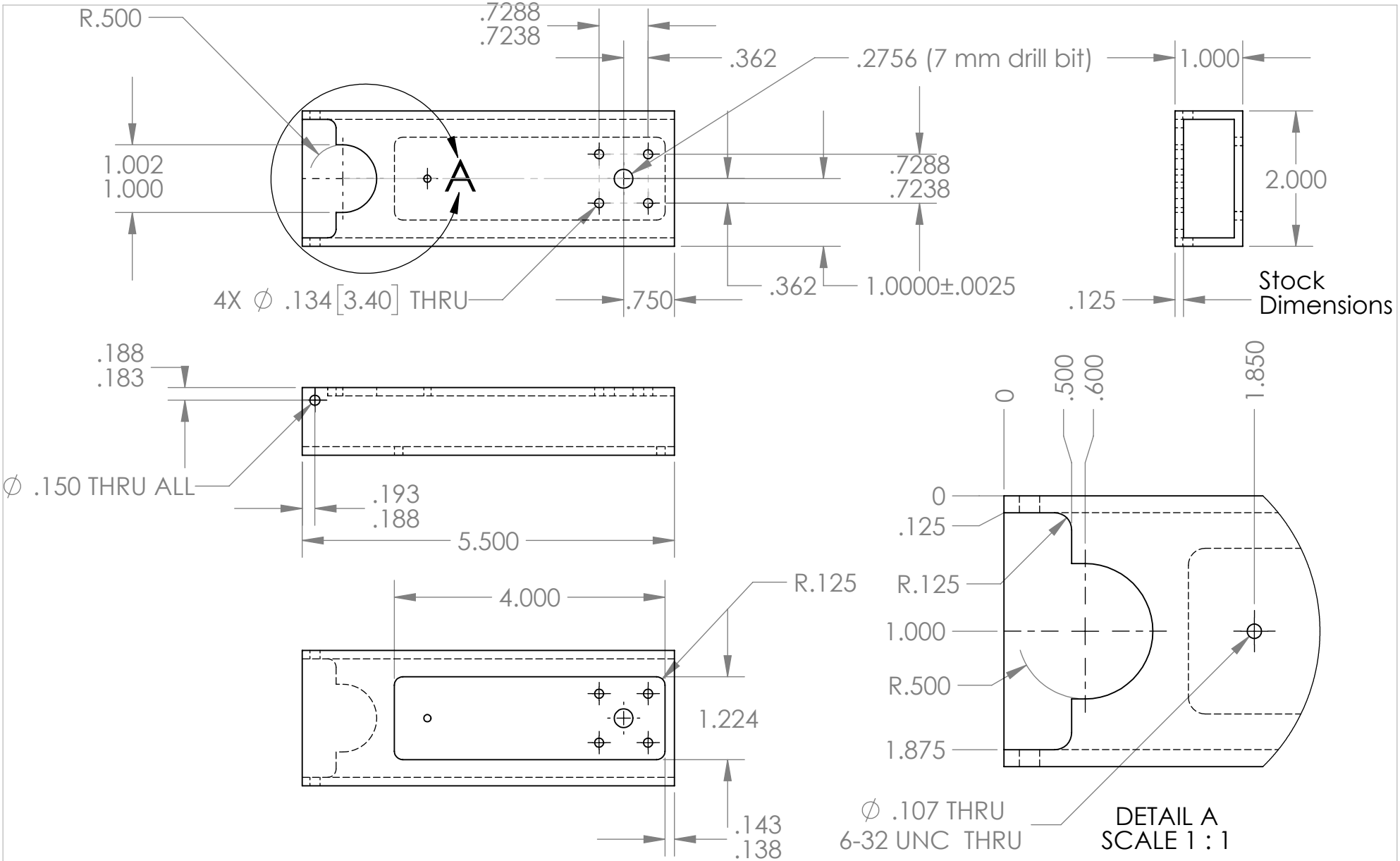

			NAME	DATE	
	UNLESS OTHERWISE SPECIFIED: DIMENSIONS ARE IN INCHES TOLERANCES: FRACTIONAL ± 1/16" ANGULAR: MACH ± .5 BEND ± 1 TWO PLACE DECIMAL ± 0.03" THREE PLACE DECIMAL ± 0.005"	DRAWN	IA	3/29/19	MSU M.& I.E. DEPT.
		CHECKED			TITLE: Roller/Belt Housing
		ENG APPR.			
	INTERPRET GEOMETRIC TOLERANCING PER:	MFG APPR.			SIZE A · DWG. NO. FR6 · REV 2
	COMMENTS:	MATERIAL			
NEXT ASSY	DO NOT SCALE DRAWING	Al 6061			SCALE: 1:4 · WEIGHT: · SHEET 1 OF 1

5 3 2 1

SOLIDWORKS Educational Product. For Instructional Use Only.