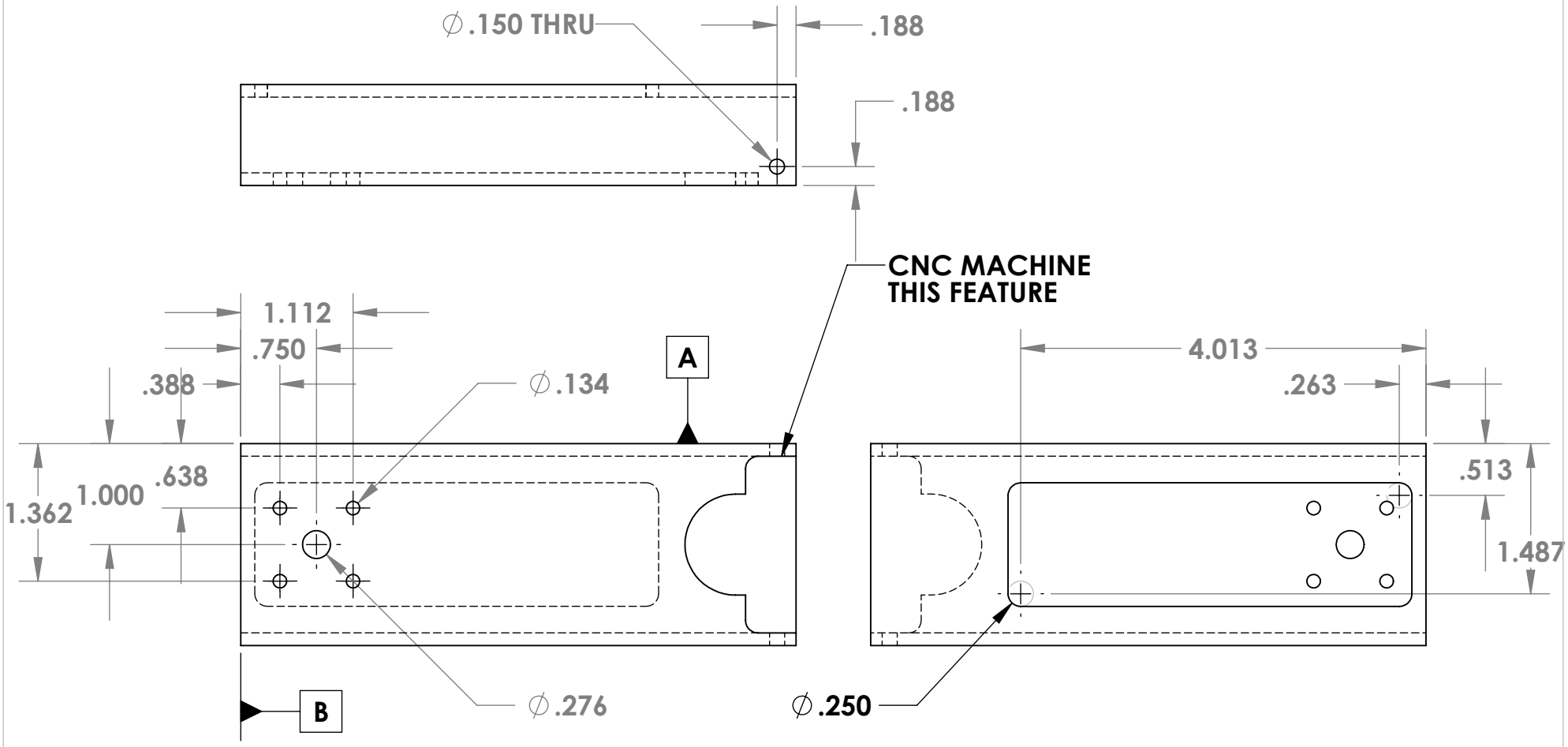

	UNLESS OTHERWISE SPECIFIED: DIMENSIONS ARE IN INCHES TOLERANCES: FRACTIONAL ± 1/16" ANGULAR: MACH ± 5 BEND ± 1 TWO PLACE DECIMAL ± 0.03" THREE PLACE DECIMAL ± 0.005"		NAME	DATE
		DRAWN		
		CHECKED		
		ENG APPR.		
	INTERPRET GEOMETRIC TOLERANCING PER:	MFG APPR.		
	COMMENTS:	MATERIAL		
NEXT ASSY	DO NOT SCALE DRAWING			

PROPRIETARY AND CONFIDENTIAL
THE INFORMATION CONTAINED IN THIS DRAWING IS THE SOLE PROPERTY OF <INSERT COMPANY NAME HERE>. ANY REPRODUCTION IN PART OR AS A WHOLE WITHOUT THE WRITTEN PERMISSION OF <INSERT COMPANY NAME HERE> IS PROHIBITED.

MSU M.& I.E. DEPT.

TITLE: **MOTOR ARM**

SIZE	DWG. NO.	REV
A	FR4	

SCALE: 1:2 | WEIGHT: | SHEET 1 OF 1

5 4 3 2 1

SOLIDWORKS Educational Product. For Instructional Use Only.