EE230: Analog Project

Analog Computer

Final Report

Aboli Ganesh Malshikare(23B1211)
Rahul kumar(23B1212)

February 7, 2024

1 Analog Computer for Solving Differential Equations

1.1 Aim of the Project

The objective of this lab experiment is to understand the principles and practical implementation of an analog computer through the simulation of a second-order differential equation. Specifically, the project aims to:

- Comprehend the concept and functionality of an analog computer using operational amplifiers.
- Simulate the vertical motion of a mass under the influence of gravity, damping, and spring forces governed by Newton's second law.
- Realize a second-order differential equation through hardware using summing and integrator op-amp circuits.
- Implement the Howland current source (Deboo integrator) for improved initialization, stability, and linearity in integration.
- Analyze system responses for varying parameter sets via both simulation (LTspice) and hardware implementation.

1.2 Design and Analysis

The vertical motion of a block under the influence of gravity, damping, and spring force is governed by Newton's second law:

$$F = ma = -mg - bv - ky \tag{1}$$

where:

- m is the mass of the block,
- g is gravitational acceleration,
- b is the damping coefficient,
- k is the spring constant,
- $v = \frac{dy}{dt}$ is the velocity, and
- y is the displacement.

Rearranging and dividing by m, we obtain the second-order differential equation:

$$\frac{d^2y}{dt^2} = -g - \frac{b}{m}\frac{dy}{dt} - \frac{k}{m}y \tag{2}$$

This equation is simulated using analog computational blocks such as summers, integrators, and inverting amplifiers.

Analog Computer Block Design

- **Buffer Circuit:** Prevents loading effects on the g potentiometer, ensuring stable voltage levels for summing.
- **Summation Circuit:** Implements the summing of gravity, damping, and spring components. The output of the summing amplifier is:

$$V_{\text{out}} = -(V_g + V_{\text{damping}} + V_{\text{spring}})$$

- **Integration Circuit:** A two-stage integrator transforms acceleration to velocity, and velocity to displacement. The integrator output is governed by:

$$V_o(t) = \frac{1}{\tau}\int_0^t V_i(t)\,dt + V_o(0)$$

where $\tau = 1$ for simplicity.

- **Voltage Mapping:** To enable analog simulation, force components are converted to voltage levels:

$$V_a \propto a, \quad V_v \propto v, \quad V_y \propto y$$

For simulation purposes, the scaling is normalized such that:

$$a = 1\,\mathrm{m/s^2} \equiv V_a = 1\,\mathrm{V}, \quad v = 1\,\mathrm{m/s} \equiv V_v = 1\,\mathrm{V}, \quad y = 1\,\mathrm{m} \equiv V_y = 1\,\mathrm{V}$$

Howland Current Source Integrator (Deboo Integrator)

To overcome drawbacks of the traditional RC integrator (e.g., floating capacitors, polarity limitations), a Howland current source-based integrator is used.

- **Conventional Integrator:**

$$V_o(t) = -\frac{1}{RC}\int_0^t V_i(t)\,dt + V_c(0)$$

Drawbacks include difficulty in setting initial conditions and polarity issues when using electrolytic capacitors.

- **Deboo Integrator (Improved):**

$$V_o(t) = \frac{2}{RC}\int_0^t V_i(t)\,dt + 2V_+(0)$$

Advantages:

  - Easier initialization due to grounded capacitor.
  - Better linearity and stability.
  - Compatible with electrolytic capacitors by connecting the capacitor's lower terminal to $-V_{dd}$.

Solving the Differential Equation for Various Cases

The motion of a block under gravity, damping, and spring force is governed by the second-order differential equation:

$$\frac{d^2y}{dt^2} = -g - \frac{b}{m}\frac{dy}{dt} - \frac{k}{m}y \tag{3}$$

With initial conditions:

$$y(0) = 4, \quad \left.\frac{dy}{dt}\right|_{t=0} = 9.8$$

Case 1: Free Fall

Given parameters: $g = 9.8\,\mathrm{m/s^2}$, $\frac{b}{m} = 0$, $\frac{k}{m} = 0$

Substituting into Equation 3:

$$\frac{d^2y}{dt^2} = -9.8$$

Integrating once:

$$\frac{dy}{dt} = -9.8t + C_1$$

Using $\frac{dy}{dt}\Big|_{t=0} = 9.8 \Rightarrow C_1 = 9.8$

$$\frac{dy}{dt} = -9.8t + 9.8$$

Integrating again:

$$y(t) = -4.9t^2 + 9.8t + C_2$$

Using $y(0) = 4 \Rightarrow C_2 = 4$

$$\boxed{y(t) = -4.9t^2 + 9.8t + 4}$$

Case 2: Damped Motion

Given parameters: $g = 9.8$, $\frac{b}{m} = 1$, $\frac{k}{m} = 0$

Equation:

$$\frac{d^2y}{dt^2} + \frac{dy}{dt} = -9.8$$

Homogeneous solution:

$$r^2 + r = 0 \Rightarrow r = 0, -1 \Rightarrow y_h(t) = C_1 + C_2e^{-t}$$

Particular solution: $y_p = -9.8t$

General solution:

$$y(t) = C_1 + C_2e^{-t} - 9.8t$$

$$\frac{dy}{dt} = -C_2e^{-t} - 9.8$$

Apply initial conditions:

$$y(0) = C_1 + C_2 = 4 \quad (1) \frac{dy}{dt}\Big|_{t=0} = -C_2 - 9.8 = 9.8 \Rightarrow C_2 = -19.6 \quad (2)$$

From (1): $C_1 = 4 + 19.6 = 23.6$

$$\boxed{y(t) = 23.6 - 19.6e^{-t} - 9.8t}$$

Case 3: Spring Oscillation

Given: $g = 3.0$, $\frac{b}{m} = 1$, $\frac{k}{m} = 5$

Equation:

$$\frac{d^2y}{dt^2} + \frac{dy}{dt} + 5y = -3.0$$

Homogeneous part:

$$r^2 + r + 5 = 0 \Rightarrow r = \frac{-1 \pm i\sqrt{19}}{2}$$

$$y_h(t) = e^{-t/2}\left(C_1 \cos\left(\frac{\sqrt{19}}{2}t\right) + C_2 \sin\left(\frac{\sqrt{19}}{2}t\right)\right)$$

Particular solution: $y_p = -\frac{3}{5} = -0.6$

General solution:

$$y(t) = e^{-t/2}\left(C_1 \cos\left(\frac{\sqrt{19}}{2}t\right) + C_2 \sin\left(\frac{\sqrt{19}}{2}t\right)\right) - 0.6$$

Compute derivatives:

$$\frac{dy}{dt} = e^{-t/2}\left[-\frac{1}{2}C_1 \cos(\omega t) - \frac{1}{2}C_2 \sin(\omega t) - \omega C_1 \sin(\omega t) + \omega C_2 \cos(\omega t)\right]$$

At $t = 0$, $\omega = \frac{\sqrt{19}}{2}$

$$y(0) = C_1 - 0.6 = 4 \Rightarrow C_1 = 4.6 \frac{dy}{dt}\Big|_{t=0} = -\frac{1}{2}C_1 + \omega C_2 = 9.8$$

$$-\frac{1}{2}(4.6) + \frac{\sqrt{19}}{2}C_2 = 9.8 \Rightarrow -2.3 + \frac{\sqrt{19}}{2}C_2 = 9.8$$

$$\frac{\sqrt{19}}{2}C_2 = 12.1 \Rightarrow C_2 = \frac{24.2}{\sqrt{19}} \approx 5.55$$

Final expression:

$$\boxed{y(t) = e^{-t/2}\left(4.6\cos\left(\frac{\sqrt{19}}{2}t\right) + 5.55\sin\left(\frac{\sqrt{19}}{2}t\right)\right) - 0.6}$$

Design Idea

- For the Summer Circuit all Resistor Value should be Equal.
- In the Integrator circuit value of RC=2.
- In Case 1 : In Freefall No feedback circuit is taken.
- In Case 3 : In Damped motion buffer circuit is included.
- In Case 3 : In Spring oscillation Buffer and Non-inverting circuit is included.

1.2.1 Case 1: Free fall Simulation design

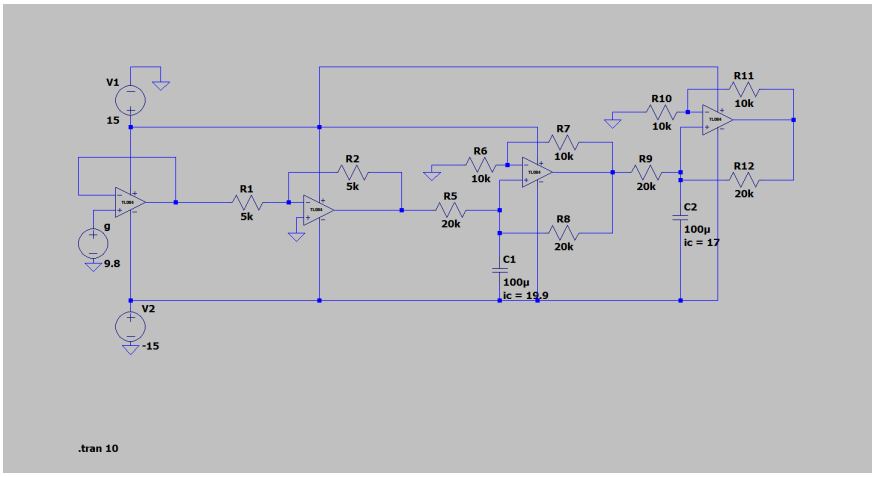

1.2.2 Case 2: Damped motion Simulation design

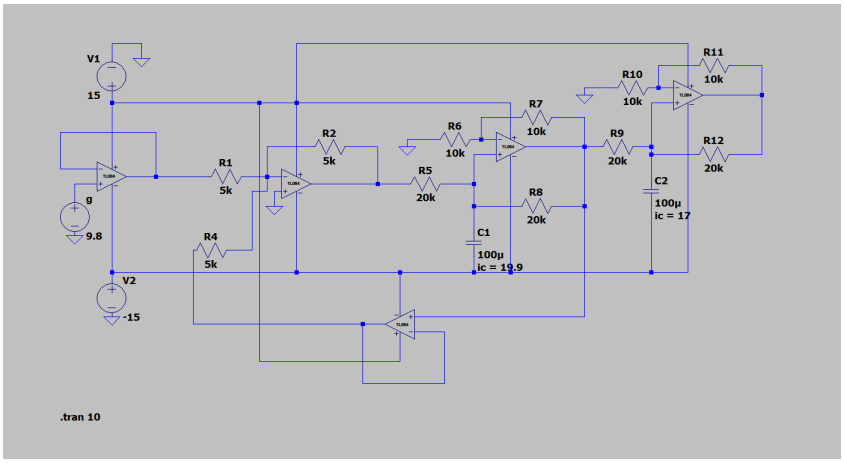

1.2.3 Case 3: Spring oscillation Simulation design

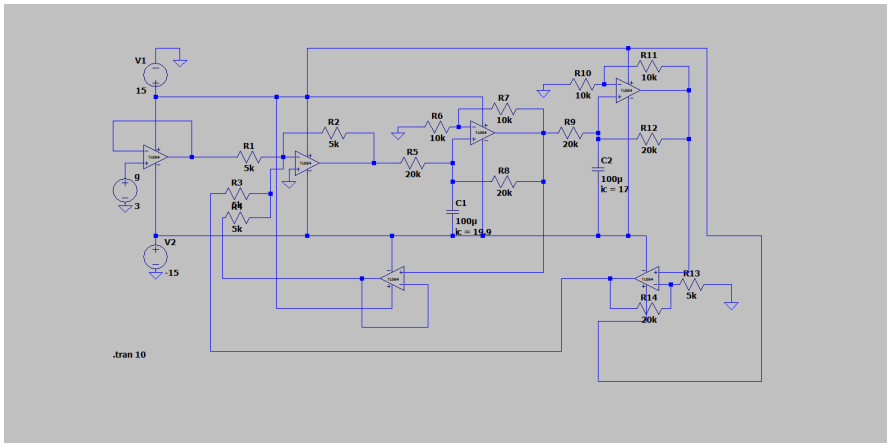

1.3 Simulation results

1.4 Case 1: Freefall Simulation Result

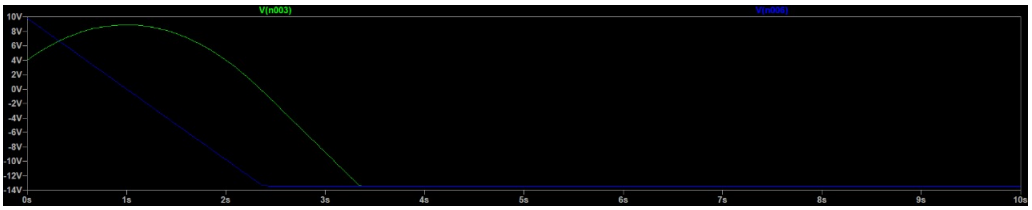

Figure 1: Plot of Velocity(blue) and Displacement(Green)

1.5 Case 2: Damped motion Simulation Result

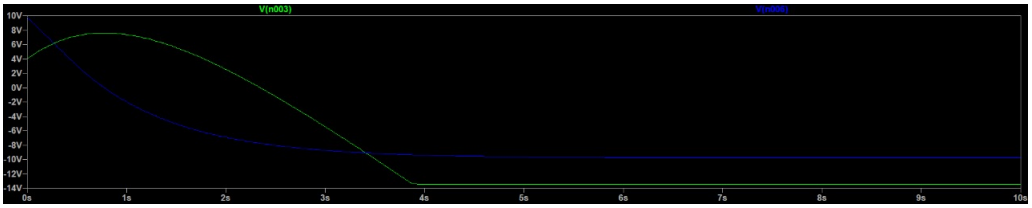

Figure 2: Plot of Velocity(blue) and Displacement(Green)

1.6 Case 3: Spring Oscillation Simulation Result

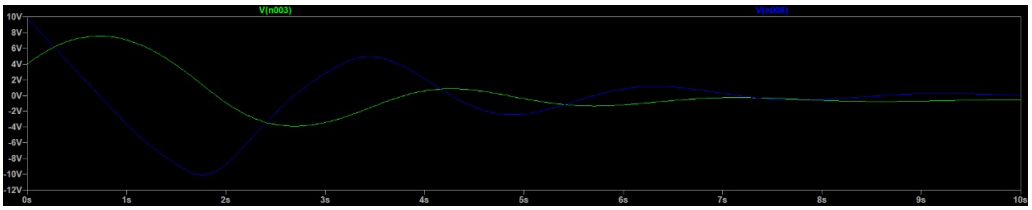

Figure 3: Plot of Velocity(blue) and Displacement(Green)

1.7 Hardwere Implementation

Case 1:Free fall Simulation design

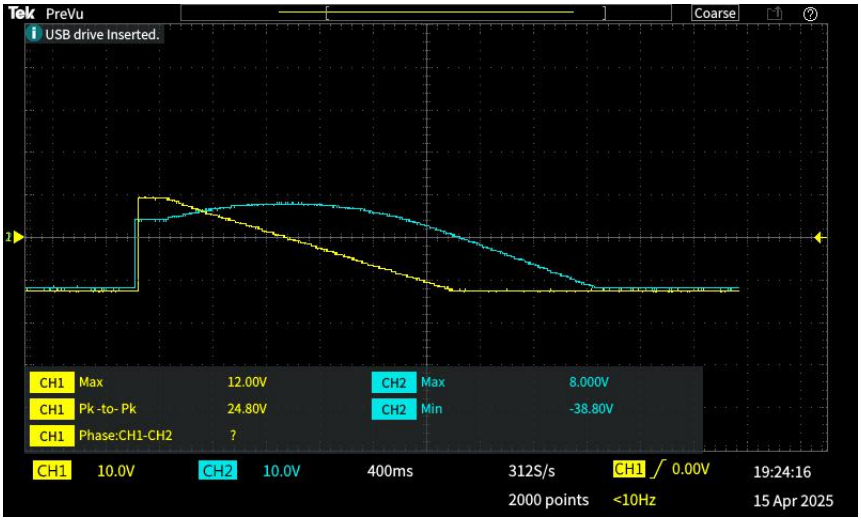

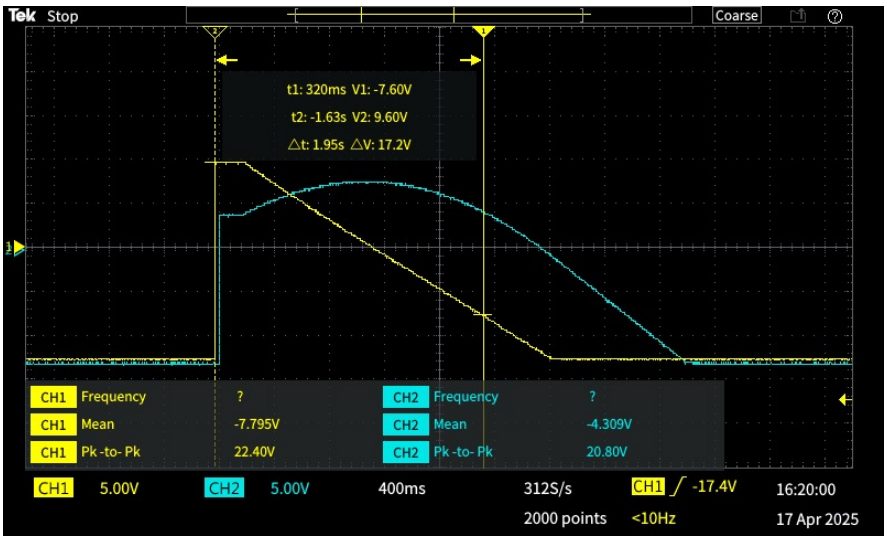

Calculated Time: 2s
Measured Time (cursor): 1.95s

Case 2:Damped motion Simulation design

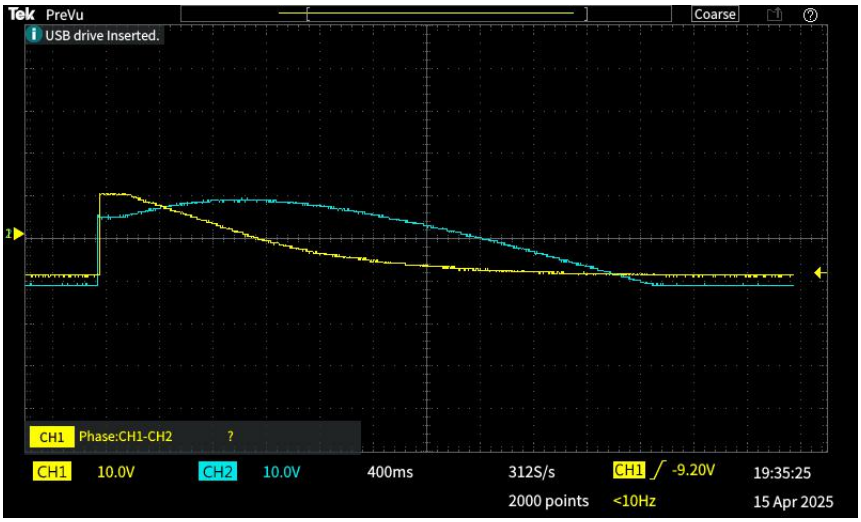

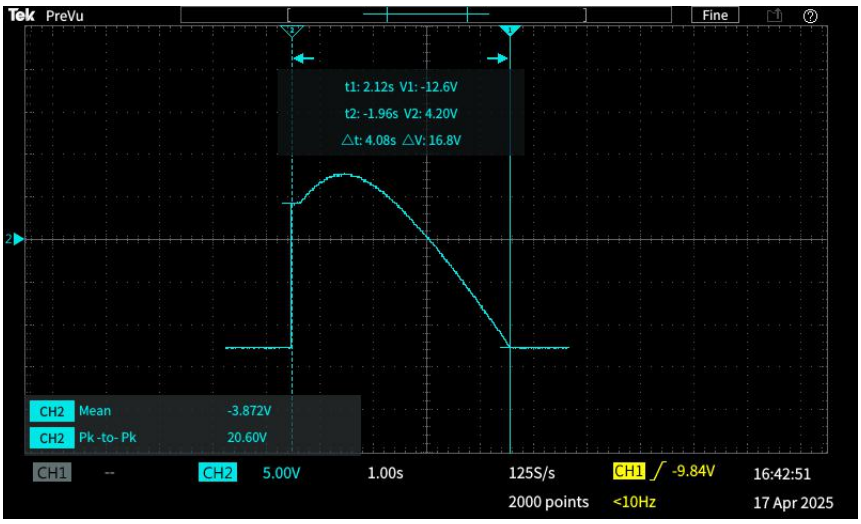

Calculated Time: 3.99s
Measured Time (cursor): 4.08s

Case 3:Spring oscillation Simulation design

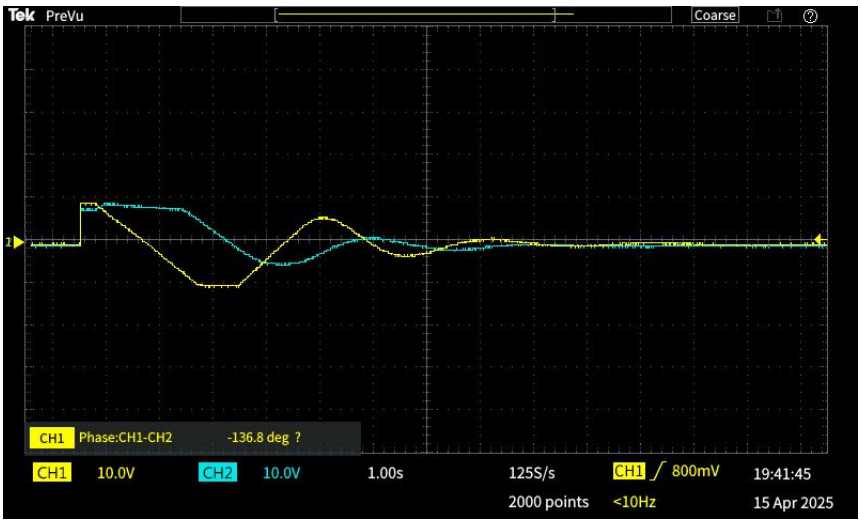

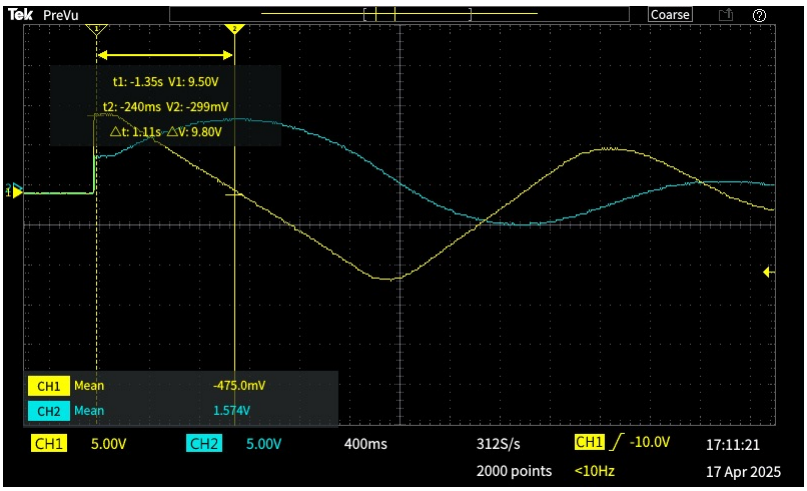

Calculated Time:1.2s
Measured Time (cursor): 1.11s

1.8 Conclusion and Inference

- **Free Fall ($g = 9.8\,\mathrm{m/s^2}$, $\frac{b}{m} = 0$, $\frac{k}{m} = 0$):** The voltage corresponding to velocity decreases linearly over time, while the displacement increases quadratically. This aligns with the theoretical model of motion under constant acceleration, indicating that the analog computer correctly simulates free fall using two-stage integration.

- **Damped Motion ($g = 9.8\,\mathrm{m/s^2}$, $\frac{b}{m} = 1$, $\frac{k}{m} = 0$):** The velocity waveform shows exponential decay and eventually stabilizes, indicating the system approaches terminal velocity. The damping force counteracts gravity as velocity increases, and the system behavior confirms correct modeling of a first-order damping term within the analog setup.

- **Spring Oscillation ($g = 3.0\,\mathrm{m/s^2}$, $\frac{b}{m} = 1$, $\frac{k}{m} = 5$):** The output exhibits underdamped oscillations, with amplitude gradually reducing over time. This behavior is characteristic of a mass-spring-damper system where both restoring and damping forces act on the body. The response demonstrates accurate implementation of second-order dynamics and validates the analog computer's ability to simulate oscillatory systems.

1.9 Questions for Students

- **Why are two integrators required in this system?**

  The second-order differential equation describing vertical motion involves acceleration ($\frac{d^2y}{dt^2}$), velocity ($\frac{dy}{dt}$), and displacement (y). To obtain the displacement from the acceleration, we need two levels of integration:

  - The first integrator converts acceleration to velocity.
  - The second integrator converts velocity to displacement.

  This cascaded integration structure allows the analog computer to simulate the full dynamics of the system as defined by Newton's second law.

- **What was the need of Howland's current source based integrator instead of Simple RC Integrator?**

  The Howland current source based integrator (also known as the Deboo integrator) offers several advantages over a conventional RC integrator:

  - *Improved Initialization*: The grounded capacitor allows easy setting of initial conditions.
  - *Better Linearity and Stability*: The current source ensures a regulated and linear charging of the capacitor, reducing integration drift.

- *Electrolytic Capacitor Compatibility*: With a slight modification, it can safely use polarized capacitors by ensuring unidirectional voltage across them.

These features make the Howland integrator more suitable for accurate and stable analog computation of dynamic systems.

- **How does changing the damping coefficient affect the motion?**

  The damping coefficient $\frac{b}{m}$ influences how quickly energy is dissipated from the system:

  - *Lower damping* leads to sustained or underdamped oscillations.
  - *Higher damping* causes quicker decay of motion and may result in overdamped or critically damped behavior.
  - In free fall with damping, increasing $\frac{b}{m}$ lowers the terminal velocity and slows the system's response.

  Thus, varying the damping coefficient directly affects the amplitude, frequency, and decay rate of the system's response.

1.10 Work Distribution

- For the Pen paper Calculation , Design and Hardwere implementation we worked and discussed together equally.
- Aboli Ganesh Malshikare design the Case 1,Case2 and Case 3 simulation in ltspice.
- I(Rahul) worked in Report making and compile all the result together.