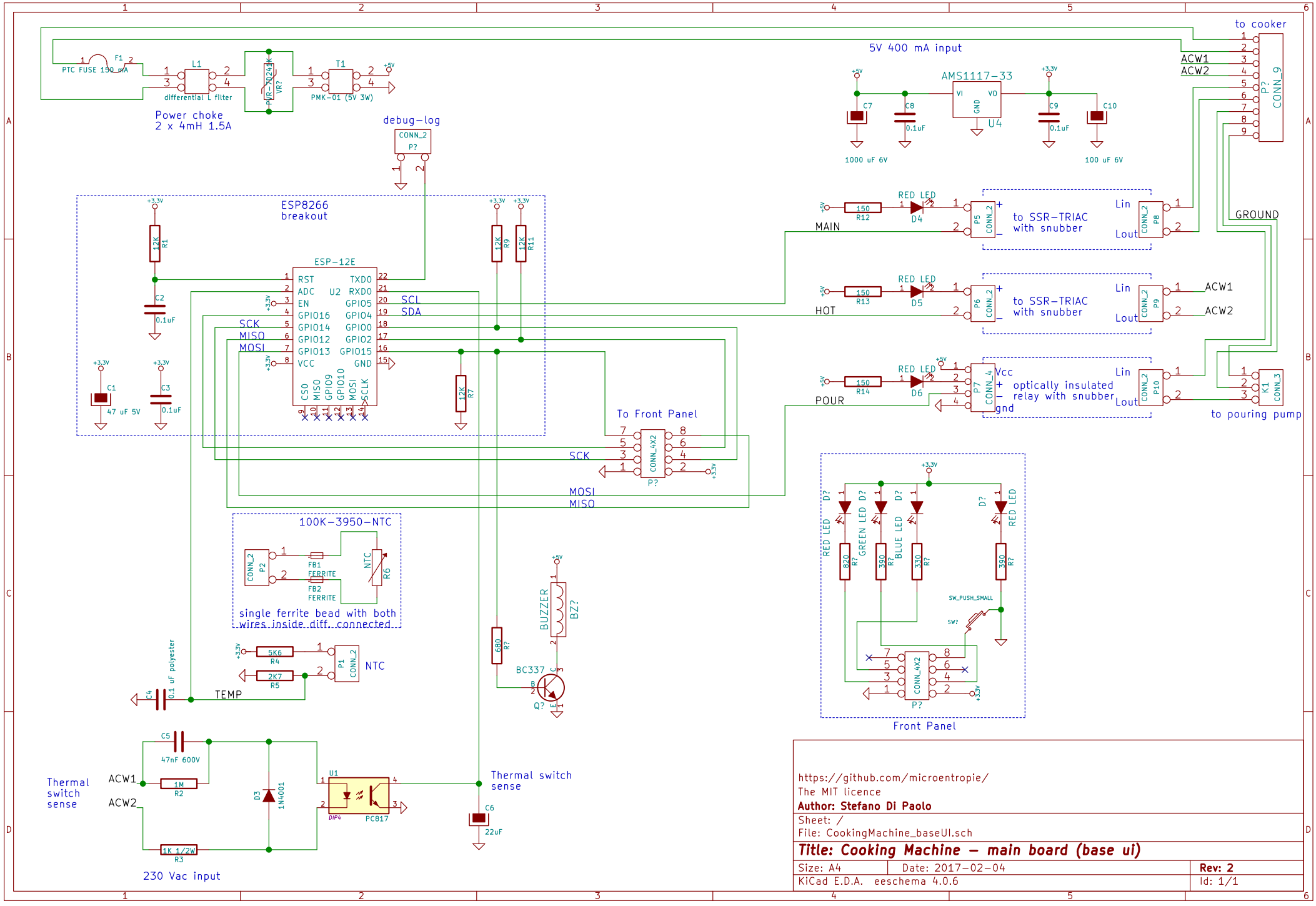

https://github.com/microentropie/
The MIT licence
Author: Stefano Di Paolo

Sheet: /
File: CookingMachine_baseUI.sch

Title: Cooking Machine – main board (base ui)

Size: A4	Date: 2017-02-04	**Rev: 2**
KiCad E.D.A. eeschema 4.0.6		Id: 1/1