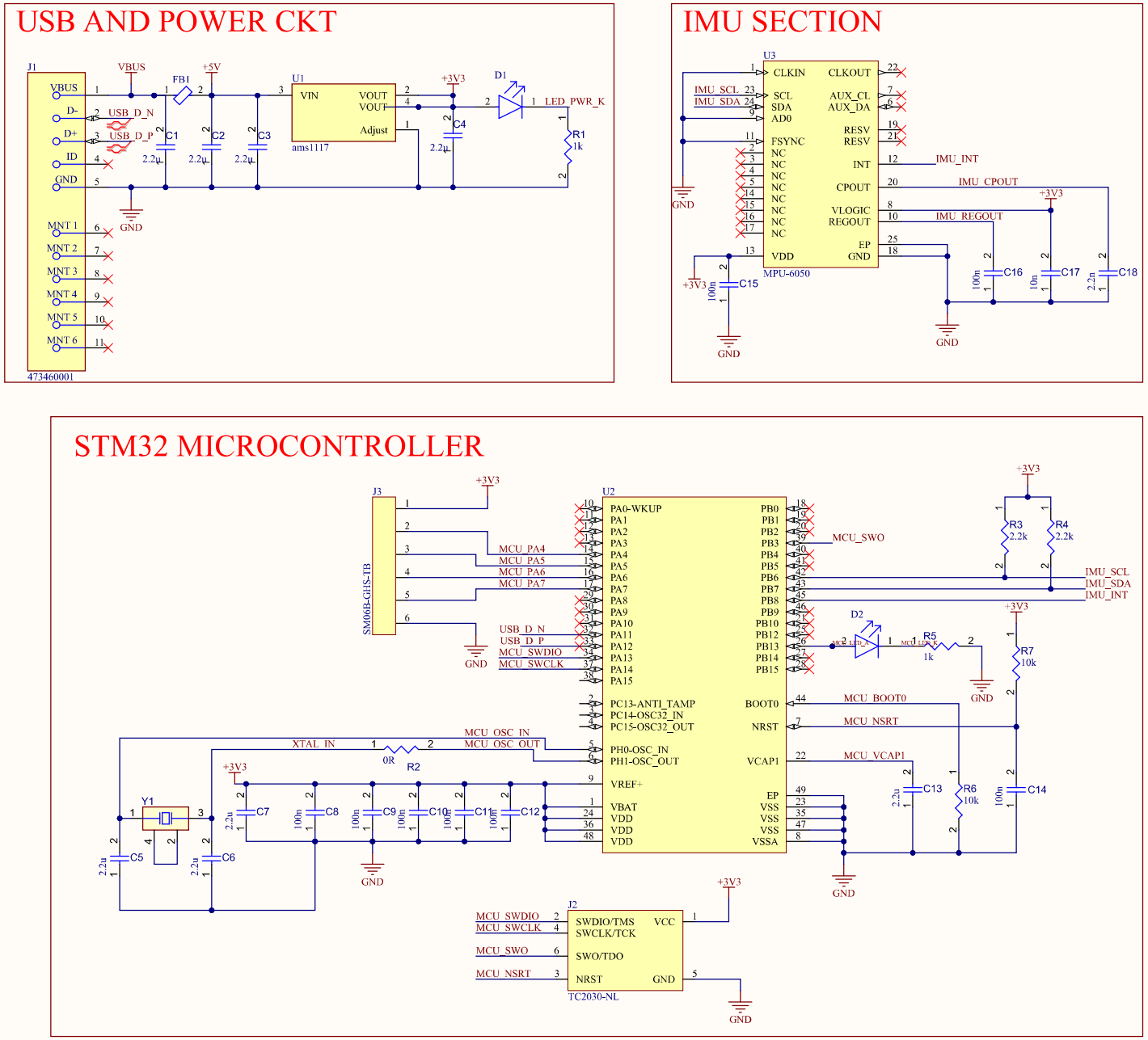

Title		
STM32 Microcontroller		
Size A3	Number First	Revision
Date: 10-27-2025	Sheet of	Altium Professional
File: E:\DRIVE-Kali\..\Main_Schematic.SchDoc	Drawn By: Mohit Jagtap	