ADAPTIVE CONTROL OF MECHANICAL MANIPULATORS

John J. Craig*, Ping Hsu**, and S. Shankar Sastry**

* Design Division, Dept. of Mechanical Engineering,
Stanford University, Stanford, Ca. 94305
** Dept. of Electrical Engineering and Electronics Research Laboratory,
University of California, Berkeley, Ca. 94720

Abstract

We present an adaptive version of the computed torque method for the control of manipulators with rigid links. The algorithm estimates parameters on-line which appear in the non-linear dynamic model of the manipulator, such as load and link mass parameters and friction parameters, and uses the latest estimates in the computed torque servo. We present what we believe is the first golbally convergent, rigorous proof of the stability of such a scheme in its non-linear setting, as well as its asymptotic properties and conditions for parameter convergence. We illustrate the theory with some simulation results.

1. Introduction

The "computed torque" servo has been suggested as a method of using the dynamic model of a manipulator in a control law formulation [1], [2]. Such a control formulation yields a controller which suppresses disturbances and tracks desired trajectories uniformly in all configurations of the manipulator. However, this desirable performance is contingent on two assumptions which have made implementations of the computed torque servo less than ideal. First, the dynamic model of the manipulator must be computed quickly enough so that discretization effects do not degrade performance relative to the continuous-time, zero-delay ideal. Second, the values of parameters appearing in the dynamic model in the control law must match the parameters of the actual system if the beneficial decoupling and linearizing effects of the computed torque servo are to be realized.

Some recent work in formulating efficient computational algorithms for manipulator dynamics, along with the increase in the performance/price ratio of computing hardware, have caused the first difficulty of employing the computed torque servo to diminish [3], [4], [5]. The work reported here is intended to address the second difficulty, that of imprecise knowledge of manipulator parameters.

We present an adaptive scheme of manipulator control which takes full advantage of any known parameters while estimating the remaining unknown parameters. The overall adaptive control system maintains the structure of the computed torque servo, but in addition has an adaptive element. After sufficient on-line learning, the control algorithm decouples and linearizes the manipulator so that each joint behaves as an independent second order system with fixed dynamics.

2. Comparison with Previous Work

We review briefly some of the literature. While not completely exhaustive, the following papers are representative of the "state of the art". Elliott et al [6] discretize the equations of the robot manipulators using a simple difference approximation for derivative. The adaptive control scheme is a variant of a method given in Goodwin and Sin [7], with a least square type update law. Unfortunately the proof of stability is incomplete (even for the two link case) and sample time issues are neglected. Dubowsky and DesForges [8] use linear decoupled models for the links in their approach. Consequently, the underlying theory is valid only if the non-linear terms are negligible and unknown parameters vary slowly. Horowitz and Tomizuka [9] use a modified version of Landau's scheme for model reference adaptive control. The approach is based on treating position dependent quantities in the dynamic equations as unknown constants which then must be assumed "slowly varying". Nicosia and Tomei [10] explicitly demonstrate the non-linear, time-varying aspects of the dynamics, however the algorithm and assumption needed to make the scheme convergent (the positive definiteness of certain unknown matrices) are non-intuitive and difficult to verify. Koivo and Guo [11] totally ignore non-linear and time-varying aspects of the dynamics, which are assumed to be linear. The proof of stability of the scheme holds only if the unknown parameters are constant. We believe our method is the first globally convergent, non-linear adaptive control law which uses essentially well known adaptive control theory as summarized in [12].

3. The Dynamic Model of a Manipulator

The manipulator is modelled as a set of n rigid bodies connected in a serial chain with friction acting at the joints. The vector equation of motion of such a device can be written in the compact form

$$\tau = M(\Theta)\ddot{\Theta} + Q(\Theta, \dot{\Theta}), \tag{1}$$

where τ is the $n \times 1$ vector of joint torques supplied by the actuators, and Θ is the $n \times 1$ vector of joint positions. Note that these joints may be revolute or prismatic. The matrix, $M(\Theta)$, is an $n \times n$, symmetric, positive definite matrix sometimes called the manipulator mass matrix. The vector $Q(\Theta, \dot{\Theta})$ represents torques arising from centrifugal, Coriolis, gravity, and friction forces.

The j-th element of (1) can be written in the sum of products form

CH2282-2/86/0000/0190$01.00 © 1986 IEEE

Authorized licensed use limited to: National Taiwan Univ of Science and Technology. Downloaded on February 16,2026 at 11:32:44 UTC from IEEE Xplore. Restrictions apply.

$$\tau_j = \sum_{i=1}^{u_j} m_{ji} f_{ji}(\Theta, \ddot{\Theta}) + \sum_{i=1}^{v_j} q_{ji} g_{ji}(\Theta, \dot{\Theta}), \tag{2}$$

where the m_{ji} and q_{ji} are parameters which are formed by products of such quantities as link masses, link inertia tensor elements, lengths (e.g. locating a center of mass), friction coefficients, and the gravitational acceleration constant. The $f_{ji}(\Theta, \ddot{\Theta})$ and the $g_{ji}(\Theta, \dot{\Theta})$ are functions which embody the dynamic structure of the manipulator. In this paper we assume that the *structure* of these paramters and dynamic functions are known, but the numerical values of some or all of the parameters m_{ji} and q_{ji} are unknown. We will, however, assume that bounds on the parameter values are known, although these bounds can be extremely loose.† This is equivalent to the situation of knowing the kinematic stucture of a manipulator and having parametric models of joint friction effects, but knowing only some, or perhaps none, of the dynamic parameters such as mass distribution of the links and friction coefficients.

4. Non-Linear Model-Based Control

To control the manipulator, we propose the control law

$$\tau = \hat{M}(\Theta)\ddot{\Theta}^* + \hat{Q}(\Theta, \dot{\Theta}), \tag{3}$$

where $\hat{M}(\Theta)$ and $\hat{Q}(\Theta, \dot{\Theta})$ are estimates of $M(\Theta)$ and $Q(\Theta, \dot{\Theta})$, and

$$\ddot{\Theta}^* = \ddot{\Theta}_d + K_v \dot{E} + K_p E. \tag{4}$$

In (4), the servo error, $E = [e_1 e_2 \ldots e_n]^T$ is defined as

$$E = \Theta_d - \Theta, \tag{5}$$

and K_v and K_p are $n \times n$ constant, diagonal gain matrices with k_{vj} and k_{pj} on the diagonals. Equation (3) is sometimes referred to as the *computed torque method* of manipulator control [1]. The desired trajectory of the manipulator is assumed known as time functions of joint positions, velocities, and accelerations, $\Theta_d(t), \dot{\Theta}_d(t)$ and $\ddot{\Theta}_d(t)$. Such a trajectory may be preplanned by several well known schemes.

The j-th element of (3) can be written in the sum of products form

$$\tau_j = \sum_{i=1}^{u_j} \hat{m}_{ji} f_{ji}(\Theta, \ddot{\Theta}^*) + \sum_{i=1}^{v_j} \hat{q}_{ji} g_{ji}(\Theta, \dot{\Theta}), \tag{6}$$

where the $\hat{m}_{ji}$ and $\hat{q}_{ji}$ are estimates of the parameters appearing in (2).

The control law, (3), is chosen because in the favorable situation of perfect knowledge of parameter values, and no disturbances, the j-th joint has closed loop dynamics given by the error equation

$$\ddot{e}_j + k_{vj}\dot{e}_j + k_{pj} e_j = 0. \tag{7}$$

Hence in this ideal situation, the k_{vj} and k_{pj} may be chosen to place closed loop poles of each joint, and disturbance rejection will be uniform over the entire workspace of the manipulator.

Figure 1 is a block diagram indicating the structure of the controller which makes use of a dynamic model of the manipulator.

† In fact, the only information we need to know in terms of bounds are that certain parameters represent moments of inertia, and hence must be positive. However, we'll assume bounds on all parameters are known.

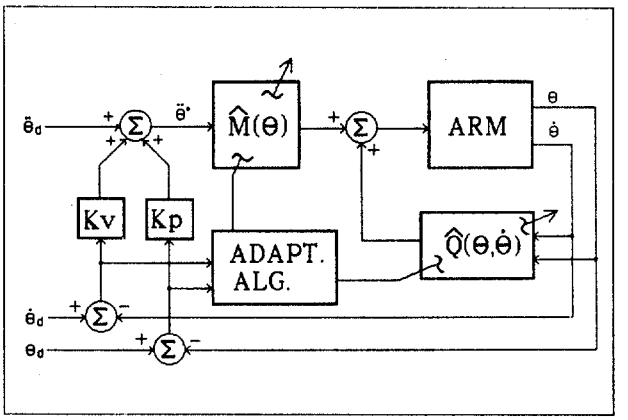

Figure 1 *The Controller with an Adaptive Element.*

An adaptive element is also indicated. This adaptive element observes servo errors and adjusts the parameters which appear in the control law (3). The remainder of this paper is concerned with the design of this adaptive element, proof of global stability of the design, and other related issues.

5. The Error Equation

When estimates of parameters do not match the true parameter values, the closed loop system will not perform as indicated by (7). By equating (1) and (3) we obtain

$$\ddot{E} + K_v \dot{E} + K_p E = \hat{M}^{-1}(\Theta)\left[\tilde{M}(\Theta)\ddot{\Theta} + \tilde{Q}(\Theta, \dot{\Theta})\right], \tag{8}$$

where $\tilde{M}(\Theta) = M(\Theta) - \hat{M}(\Theta)$ and $\tilde{Q}(\Theta, \dot{\Theta}) = Q(\Theta, \dot{\Theta}) - \hat{Q}(\Theta, \dot{\Theta})$, representing errors in the dynamic model used in the controller arising from errors in the parameters of the model.

In a given application, we may know some of the parameters m_{ji} and q_{ji}. Of the u_j and v_j parameters appearing in the dynamic equation of the j-th joint, let r_j and s_j of them be *unknown*, with $r_j \le u_j$ and $s_j \le v_j$ for all j. Re-index the unknown parameters (if necessary) and note that the j-th component of the expression in the square brackets in (8) can be written

$$\tilde{\tau}_j = \sum_{i=1}^{r_j} \tilde{m}_{ji} f_{ji}(\Theta, \ddot{\Theta}) + \sum_{i=1}^{s_j} \tilde{q}_{ji} g_{ji}(\Theta, \dot{\Theta}), \tag{9}$$

where

$$\begin{aligned} \tilde{m}_{ji} &= m_{ji} - \hat{m}_{ji} \\ \tilde{q}_{ji} &= q_{ji} - \hat{q}_{ji} \end{aligned} \tag{10}$$

are parameter errors.

The error equation given in (8) relates errors in the parameter estimates to servo errors. The discussion preceeding (9) tells how to arbitrarily partition the dynamics into known and unknown portions. This partitioning will allow us to construct an adaptive scheme which makes full use of known parameters, and only adjusts the estimates of the unknown parameters. For example, we may know the inertial properties of the manipulator, but not the friction coefficients, or we may know the parameters of some links but not others, etc.

We will write the error equation (8) in the form

$$\ddot{E} + K_v \dot{E} + K_p E = \hat{M}^{-1}(\Theta)\, W(\Theta, \dot{\Theta}, \ddot{\Theta})\, \Phi, \tag{11}$$

Authorized licensed use limited to: National Taiwan Univ of Science and Technology. Downloaded on February 16,2026 at 11:32:44 UTC from IEEE Xplore. Restrictions apply.

where Φ is an $r \times 1$ vector containing the parameter errors for all the unique parameters in the system, and $W(\Theta, \dot{\Theta}, \ddot{\Theta})$ is an $n \times r$ matrix of functions. For brevity, the arguments of $\hat{M}^{-1}$ and W will be dropped in the sequel. The number of system parameters is

$$r \leq \sum_{j=1}^{n} (r_j + s_j). \tag{12}$$

These r system parameters, which are the m_{ji} and the q_{ji} either alone or in combination, will now be called $P = [p_1\ p_2\ \ldots\ p_r]^T$ and their estimates are $\hat{P} = [\hat{p}_1\ \hat{p}_2\ \ldots\ \hat{p}_r]^T$, so that

$$\Phi = P - \hat{P}. \tag{13}$$

For uniformity, W and P can be defined so that each element of P is positive.

For the j-th joint an error equation may be written as

$$\ddot{e}_j + k_{vj}\dot{e}_j + k_{pj}e_j = (\hat{M}^{-1}W\Phi)_j, \tag{14}$$

where $(\cdot)_j$ means the j-th element of the $n \times 1$ vector, $\hat{M}^{-1}W\Phi$. Thus, in general, a parameter error for *any* parameter in the system will give rise to errors on the j-th joint.

In the following analysis it will be important that the product $\hat{M}^{-1}W$ remain bounded at all times. Since W is composed of bounded functions of manipulator trajectory, W will remain bounded if the trajectory of the manipulator remains bounded. The matrix $\hat{M}(\Theta)$ will remain positive definite and invertible if we insure that all parameters m_{ji} remain positive. With this as motivation, we will restrict our estimates of the parameters to lie within bounds, such that

$$l_i - \delta < p_i < h_i + \delta \tag{15}$$

where we know that the actual value, p_i, lies between l_i and h_i, and where δ is positive and chosen such that $\hat{M}^{-1}$ remains bounded as long as (15) holds. For example, if p_i is a mass parameter, $l_i - \delta$ is chosen positive so that the estimate of this mass never becomes negative. In this way, we can insure that $\hat{M}(\Theta)$ is always positive definite.

6. The Adaptation Algorithm

The adaptive law will compute how to change parameter estimates as a function of a filtered servo error signal. The filtered servo error for the j-th joint is

$$e_{1j}(s) = (s + \alpha_j)e_j(s), \tag{16}$$

where the α_j are positive constants. Hence,

$$E_1 = \dot{E} + \alpha E, \tag{17}$$

where $\alpha = diag(\alpha_1\ \alpha_2\ \ldots\ \alpha_n)$. Note that for manipulators which are instrumented with position and velocity sensors, the value E_1 can be computed simply from sensor readings and the filter need not be implemented as such.

The α_j are chosen such that transfer function

$$\frac{s + \alpha_j}{s^2 + k_{vj}s + k_{pj}} \tag{18}$$

is strictly positive real (SPR).† Then, by the positive real lemma [13] we are assured of the existence of the positive definite matrices $\mathcal{P}_j$ and $\mathcal{Q}_j$ such that

$$\begin{aligned} A_j^T\mathcal{P}_j + \mathcal{P}_jA_j &= -\mathcal{Q}_j \\ \mathcal{P}_jB_j &= C_j^T, \end{aligned} \tag{19}$$

where the matrices A_j, B_j, and C_j are the matrices of a minimal state space realization of the filtered error equation of the j-th joint

$$\begin{aligned} \dot{x}_j &= A_jx_j + B_j(\hat{M}^{-1}W\Phi)_j \\ e_{1j} &= C_jx_j, \end{aligned} \tag{20}$$

where the state vector is $x_j = [e_j\ \dot{e}_j]^T$.

The filtered error equation of the entire system in state space form is given by

$$\begin{aligned} \dot{X} &= AX + B\hat{M}^{-1}W\Phi \\ E_1 &= CX, \end{aligned} \tag{21}$$

where A, B, and C are all block diagonal (with A_j, B_j, and C_j on the diagonals, respectively) and $X = [x_1\ x_2\ \ldots\ x_n]^T$. Forming the $2n \times 2n$ matrices $\mathcal{P} = diag(\mathcal{P}_1\ \mathcal{P}_2\ \ldots\ \mathcal{P}_n)$ and $\mathcal{Q} = diag(\mathcal{Q}_1\ \mathcal{Q}_2\ \ldots\ \mathcal{Q}_n)$ we have that $\mathcal{P} > 0$, $\mathcal{Q} > 0$, and

$$\begin{aligned} A^T\mathcal{P} + \mathcal{P}A &= -\mathcal{Q} \\ \mathcal{P}B &= C^T, \end{aligned} \tag{22}$$

We now use Lyapunov theory to derive an adaptation law [14]. The function

$$v(X, \Phi) = X^T\mathcal{P}X + \Phi^T\Gamma^{-1}\Phi \tag{23}$$

with $\Gamma = diag(\gamma_1\ \gamma_2\ \ldots\ \gamma_r)$ and $\gamma_i > 0$ is non-negative in both servo and parameter errors. Differentiation with respect to time leads to

$$\dot{v}(X, \Phi) = -X^T\mathcal{Q}X + 2\Phi^T\left(W^T\hat{M}^{-1}E_1 + \Gamma^{-1}\dot{\Phi}\right) \tag{24}$$

If we choose

$$\dot{\Phi} = -\Gamma W^T\hat{M}^{-1}E_1, \tag{25}$$

we have

$$\dot{v}(X, \Phi) = -X^T\mathcal{Q}X \tag{26}$$

which is non-positive because $\mathcal{Q}$ is positive definite. Since $\Phi = P - \hat{P}$, we have $\dot{\Phi} = -\dot{\hat{P}}$, and from (25) we have the adaptation law

$$\dot{\hat{P}} = \Gamma W^T\hat{M}^{-1}E_1. \tag{27}$$

Equations (23) and (26) imply that X and Φ are bounded. The basic update law is given by (27), however, in order to restrict the parameter estimates to lie within the bounds given in (15), we augment the update law for parameter p_i with the reset conditions

$$\begin{cases} \hat{p}_i(t^+) = l_i, & \text{if } \hat{p}_i(t) \leq l_i - \delta; \\ \hat{p}_i(t^+) = h_i, & \text{if } \hat{p}_i(t) \geq h_i + \delta; \end{cases} \tag{28}$$

† A rational SPR function, $T(s)$, is one which is analytic in the closed right half plane and has $Re(T(j\omega)) > 0\ \forall\omega$.

Authorized licensed use limited to: National Taiwan Univ of Science and Technology. Downloaded on February 16,2026 at 11:32:44 UTC from IEEE Xplore. Restrictions apply.

Thus if an estimate moves outside its known bound by an amount δ, it is reset to its bound. This parameter *resetting* causes a step change in Φ in (21). This cannot cause an instantaneous change in X and so we can write the value of the Lyapunov function before and after the reset of p_i to its lower bound at time t_j as

$$\begin{aligned} v(t_j) &= X^T \mathcal{P} X + \sum_{\substack{k=1 \\ k \neq i}}^{r} \frac{1}{\gamma_k}\phi_k^2 + \frac{1}{\gamma_i}(p_i - l_i + \delta)^2 \\ v(t_j^+) &= X^T \mathcal{P} X + \sum_{\substack{k=1 \\ k \neq i}}^{r} \frac{1}{\gamma_k}\phi_k^2 + \frac{1}{\gamma_i}(p_i - l_i)^2 \end{aligned} \tag{29}$$

Therefore the change in v due to the resetting of $\hat{p}_i$ at time t_j is

$$\epsilon_j = v(t_j^+) - v(t_j) = -(2(p_i - l_i) - \delta)(\frac{\delta}{\gamma_i}) \tag{30}$$

where ϵ_j is negative with magnitude lower bounded by $\frac{\delta^2}{\gamma_i}$. Similarly, if resetting p_i to its upper bound at time t_j we have

$$\epsilon_j = v(t_j^+) - v(t_j) = (2(p_i - h_i) - \delta)(\frac{\delta}{\gamma_i}) \tag{31}$$

where ϵ_j is negative with magnitude lower bounded by $\frac{\delta^2}{\gamma_i}$. Hence the addition of parameter resetting maintains the non-positiveness of $\dot{v}(X, \Phi)$ and hence the system is stable in the sense of Lyapunov with X and Φ bounded.

Since X, Φ, $\hat{M}^{-1}$, and W are bounded, we see from (21) that $\dot{X}$ is bounded as well. Thus, X is uniformly continuous, and so is $\dot{v}(X, \Phi)$. From (23) and (26) we have

$$\lim_{t \to \infty} v(X, \Phi) = v^* \tag{32}$$

exists, with

$$v^* - v(X_0, \Phi_0) = \int_0^\infty \dot{v}(X, \Phi) dt + \sum_{j=1}^{q} \epsilon_j \tag{33}$$

where q parameter resettings take place. Since the left hand side is known to be finite, and both terms on the right hand side have the same sign, we know that each term on the right hand side must be finite. Hence at most a finite number, q, of parameter resets take place.

We know [15] that since $\dot{v}(X, \Phi)$ is non-positive, uniformly continuous, and has a finite integral that

$$\lim_{t \to \infty} \dot{v}(X, \Phi) = 0, \tag{34}$$

and thus

$$\begin{aligned} \lim_{t \to \infty} E &= 0 \\ \lim_{t \to \infty} \dot{E} &= 0. \end{aligned} \tag{35}$$

Hence the adaptive scheme is stable (in the sense that all signals remain bounded) and trajectory tracking errors, E and $\dot{E}$ converge to zero. As concerns convergence of the parameter errors, note that if the trajectory is not persistently exciting we can say only

$$\lim_{t \to \infty} \left| \Gamma^{\frac{1}{2}} \Phi \right| = \sqrt{v^*}. \tag{36}$$

Note that $\ddot{\Theta}$, the actual acceleration of the manipulator, appears in the adaptation law of any parameter representing an inertia. Manipulators do not usually have acceleration sensors. However, the integrating action of the parameter update law reduces the necessity for good acceleration information.

7. Parameter Error Convergence

In the absence of parameter resetting, we may write the equations describing the complete system (i.e. (21) and (25)) as

$$\begin{bmatrix} \dot{X} \\ \dot{\Phi} \end{bmatrix} = \begin{bmatrix} A & B\hat{M}^{-1}W \\ -\Gamma W^T \hat{M}^{-1} C & 0 \end{bmatrix} \begin{bmatrix} X \\ \Phi \end{bmatrix}. \tag{37}$$

Several researchers have studied the asymptotic stability of (37). In [16] and [17] it is shown that (37) is uniformly asymptotically stable (u.a.s.) if the earlier SPR condition is met and if $\hat{M}^{-1}W$ satisfies the persistent excitation condition

$$\alpha I \leq \int_s^{s+\rho} (\hat{M}^{-1}W)^T (\hat{M}^{-1}W) dt \leq \beta I \tag{38}$$

for all s, where α, β, and ρ are all positive. Further, since $\hat{M}^{-1}$ is uniformly positive definite and bounded, it can be shown that (38) will be satisfied if

$$\alpha I \leq \int_s^{s+\rho} W^T W dt \leq \beta I \tag{39}$$

is satisfied. In the preceeding section we determined that there will be at most a finite number of parameter *resets* when a parameter estimate moves outside its bounds. Hence, after a finite amount of time, the system will be described by (37) and hence, condition (39) is the condition to meet in order to insure that parameter estimate errors converge to zero.

Finally, since we have shown (independent of persisitent excitation) that the servo error converges to zero under this control scheme, the persistent excitation condition of (39) will be met if the *desired trajectory* satisfies

$$\alpha I \leq \int_s^{s+\rho} W_d^T W_d dt \leq \beta I. \tag{40}$$

Where W_d is the W function evaluated along the desired rather than the actual trajectory of the manipulator. Hence we have derived a condition on the desired trajectory such that all parameters will be identified after a sufficient learning interval.

8. Simulation Results

A simple two degree of freedom manipulator (as shown in figure 2) was simulated to test the adaptive algorithm. The manipulator was modelled as two rigid links (of lengths l_1, l_2) with point masses at the distal ends of the links (m_1, m_2). It moves is a vertical plane with gravity acting. Both viscous (v_i coefficients) and Coulomb friction (k_i coefficients) are simulated at the joints. Such a manipulator, although quite simple, is subject to joint torques due to inertial, centrifugal, Coriolis, gravity, and frictional effects.

Authorized licensed use limited to: National Taiwan Univ of Science and Technology. Downloaded on February 16,2026 at 11:32:44 UTC from IEEE Xplore. Restrictions apply.

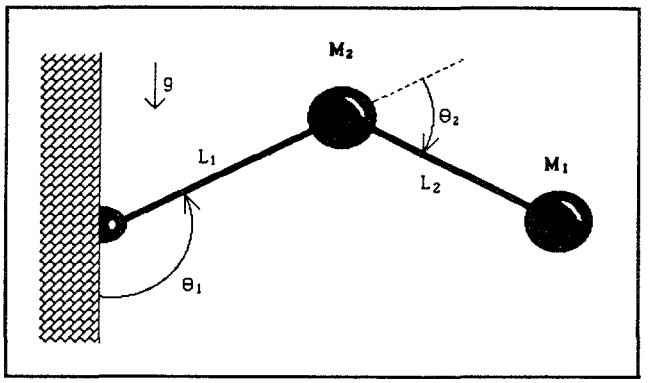

Figure 2 *Two link manipulator used in simulations.*

The equations of motion for this device are [2]:

$$\begin{aligned}\tau_1 &= m_2 l_2^2(\ddot{\theta}_1 + \ddot{\theta}_2) + m_2 l_1 l_2 c_2(2\ddot{\theta}_1 + \ddot{\theta}_2) + (m_1 + m_2) l_1^2 \ddot{\theta}_1 \\ &\quad - m_2 l_1 l_2 s_2 \dot{\theta}_2^2 - 2 m_2 l_1 l_2 s_2 \dot{\theta}_1 \dot{\theta}_2 + m_2 l_2 g s_{12} \\ &\quad + (m_1 + m_2) l_1 g s_1 + v_1 \dot{\theta}_1 + k_1 sgn(\dot{\theta}_1) \\ \tau_2 &= m_2 l_1 l_2 c_2 \ddot{\theta}_1 + m_2 l_1 l_2 s_2 \dot{\theta}_1^2 + m_2 l_2 g s_{12} + m_2 l_2^2 (\ddot{\theta}_1 + \ddot{\theta}_2) \\ &\quad + v_2 \dot{\theta}_2 + k_2 sgn(\dot{\theta}_2)\end{aligned} \tag{41}$$

Where $c_1 = cos(\theta_1)$, $s_{12} = sin(\theta_1 + \theta_2)$, etc. These equations are in the sum of products form of (2), with $u_1 = 3$, $v_1 = 6$, $u_2 = 2$, and $v_2 = 4$. We assumed that the values of the link lengths, l_1 and l_2, and the value of the gravitational constant, g, are known. Even these parameters could be unknown, but in most realistic situations they are known quite well. Since the l_i and g do not appear as independent parameters, we have $r_j = u_j$ and $s_j = v_j$ in (9). Writing the system's error equation in the form given in (11) results in a total of 6 system parameters ($r = 6$ in (12)). The parameters are:

$$\begin{aligned} p_1 &= m_1 \\ p_2 &= m_2 \\ p_3 &= k_1 \\ p_4 &= v_1 \\ p_5 &= k_2 \\ p_6 &= v_2 \end{aligned} \tag{42}$$

and the W matrix is:

$$W = \begin{bmatrix} w_{11} & w_{12} & w_{13} & w_{14} & 0 & 0 \\ 0 & w_{22} & 0 & 0 & w_{25} & w_{26} \end{bmatrix} \tag{43}$$

where:

$$\begin{aligned} w_{11} &= l_1^2 \ddot{\theta}_1 + l_1 g s_1 \\ w_{12} &= (l_1^2 + l_2^2 + 2 l_1 l_2 c_2)\ddot{\theta}_1 + (l_2^2 + l_1 l_2 c_2)\ddot{\theta}_2 \\ &\quad + l_1 g s_1 + l_2 g s_{12} - l_1 l_2 s_2 \dot{\theta}_2^2 - 2 * l_1 l_2 s_2 \dot{\theta}_1 \dot{\theta}_2 \\ w_{13} &= sgn(\dot{\theta}_1) \\ w_{14} &= \dot{\theta}_1 \\ w_{22} &= (l_2^2 + l_1 l_2 c_2)\ddot{\theta}_1 + l_2^2 \ddot{\theta}_2 + l_1 l_2 s_2 \dot{\theta}_1^2 + l_2 g s_{12} \\ w_{25} &= sgn(\dot{\theta}_2) \\ w_{26} &= \dot{\theta}_2. \end{aligned} \tag{44}$$

The parameter update law is then as given in (27) and (28).

Parameters used in the simulation were chosen to be realistic, and process noise was added in the form of random perturbations at the torque output of the actuators. The desired trajectory had the form:

$$\begin{aligned} \theta_{1d} &= a_1 + b_1(sin(t) + sin(2t)) \\ \theta_{2d} &= a_2 + b_2(cos(4t) + cos(6t)) \end{aligned} \tag{45}$$

Figures 3 through 6 show some results from a typical simulation. In this case, all parameters initially had substantial errors which were corrected by the adpative controller over the first several seconds of operation.

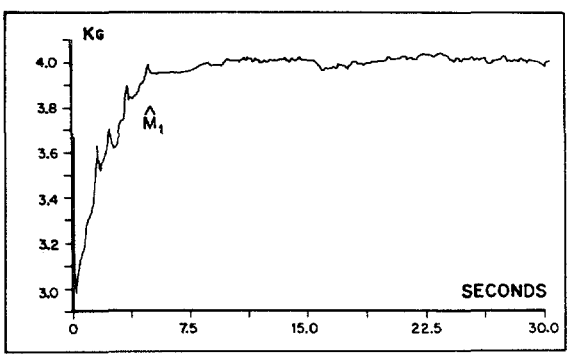

Figure 3 *Estimate of the mass of link 1 (Kg).*

Figure 3 shows $\hat{m}_1$ starting from an initial value of 3 Kg and adapting to the true value of 4 Kg. Figure 4 shows $\hat{m}_2$ changing from an initial guess of 2 Kg to a true value of 4 Kg. Figure 5 shows the estimate of the Coulomb friction coefficient of joint 2, $\hat{k}_2$. For this parameter, the initial guess was 0.0 and the true value was 1 NtM.

Similar results were obtained for $\hat{k}_1$, and for the viscous friction coefficients. Figure 6 shows the servo error on joint 2 diminishing as the system tunes itself. The response of joint 1 was similar. In tuned steady state, the remaining errors are due to the noise added to the simulation to test robustness. The magnitude of these servo error perturbations is consistent with the value of the noise amplitude divided by the closed loop position gain. The velocity error, $\dot{E}$, was equally well behaved.

The time scale on simulations such as these may be misleading. It would have been possible to adjust the γ_i so that the adaptation was much more rapid, but an attempt was made to use numbers that were felt to be reasonable. Issues such as speed of adaptation need to be experimentally verified with an actual mechanical system which contains all the realities ignored in simulations.

Authorized licensed use limited to: National Taiwan Univ of Science and Technology. Downloaded on February 16,2026 at 11:32:44 UTC from IEEE Xplore. Restrictions apply.

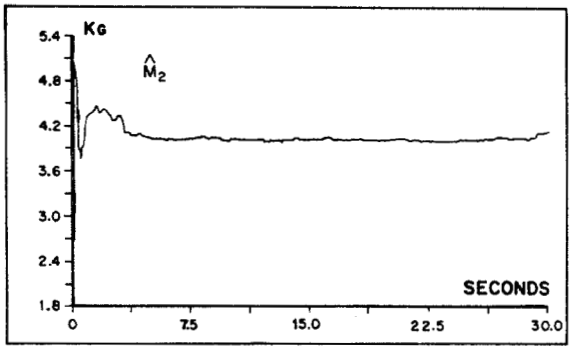

Figure 4 *Estimate of the mass of link 2 (Kg).*

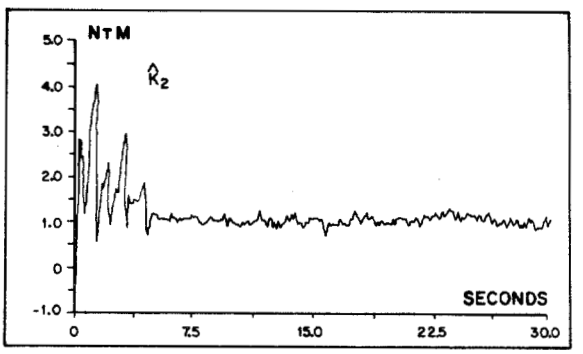

Figure 5 *Estimate of k_2 (NtM).*

9. Conclusions

A globally stable adaptive control scheme for a complex nonlinear system has been designed. The adaptation process can be added to the model-based control formulation for robot manipulators (sometimes called the computed torque method) without otherwise altering the controller structure.

Using the results in section 7, trajectories especially well suited to identification of parameters could be pre-planned, however, most real world trajectories carried out by industrial robots are sufficiently exciting, and so the scheme could be used as an online controller.

This method could be directly applied to a Cartesian based control scheme such as the one reported in [18]. The method might also be extended to include an active force control servo, where some identified parameters are associated with properties of the task surfaces rather than strictly with the manipulator itself.

10. Acknowledgments

J. Craig was supported by a grant from the Systems Development Foundation. P. Hsu and S. Sastry were supported by the Army Research Office under grant No. DAAG 29-85-K-0072 and IBM under a faculty development grant 1983.

11. References

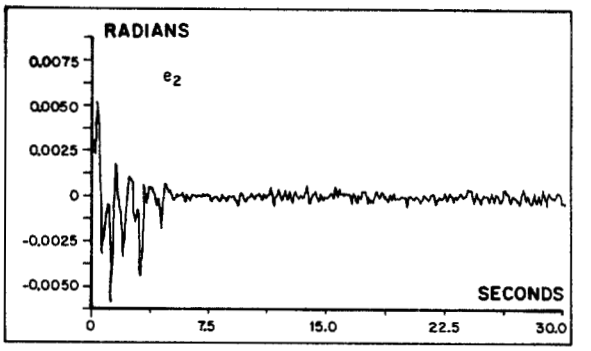

Figure 6 *Servo error for joint 2 (Radians).*

[1] Markewicz, B., "Analysis of the Computed Torque Drive Method and Comparison with Conventional Position Servo for a Computer-controlled Manipulator", Tech. Memo 33-601, Jet Lab, Pasadena, Ca., March 15, 1973.

[2] J.J. Craig, "Introlduction to Robotics: Mechanics and Control", Addison- Wesley, Reading, Mass., 1986

[3] M. Renaud, "An Efficient Iterative Analytical Procedure for Obtaining a Robot Manipulator Dynamic Model", First Int. Symp. of Robotics Research, New Hampshire, Aug. 1983.

[4] J.W. Burdick, "An Algorithm for Generation of Efficient Manipulator Dynamic Equations," submitted to the IEEE Conference on Robotics and Automation, San Francisco, 1986

[5] R.H. Lathrop, "Parallelism in Manipulator Dynamics", The Int. J. of Robotics Research, Vol. 4, No. 2, Summer 1984

[6] H. Elliot et al., "Nonlinear Adaptive Control of Mechanical Linkage Systems with Application to Robotics", Proceeding of the ACC, San Diego, Ca, June, 1984

[7] G. Goodwin and K.S. Sin, "Adaptive filtering, Prediction and Control", Prentice Hall, 1984

[8] S. Dubowsky and D.T. DesForges, "The Application of Model-Referenced Adaptive Control to Robotic Manipulators", The J. of Dynamic Systems, Measurement, and Control, Vol.101 Sept. 1979.

[9] M. Tomizuka and R. Horowitz, "Model Reference Adaptive Control of Mechanical Manipulators", IFAC Adaptive Systems in Control and Signal Processing, San Francisco, Ca., 1983

[10] A.J. Koivo, and T. Guo, "Adaptive Linear Controller for Robotic Manipulators", IEEE Trans. on AC, Vol. AC-28, No. 2, Feb. 1983.

[11] S. Nicosia and P. Tomei, "Model Reference Adaptive Control Algorithms for Industrial Robots", Automatica, Vol. 20, No. 5,1984

[12] S. Shankar Sastry, "Moodel-reference adaptive control - Stability, Parameter convergence, and Robustness", IMA J. of Math. Control and Information, pp. 27-66,1984.

[13] B.D.O. Anderson and S. Vongpanitlerd, "Network Synthesis: A State Space Approach", Prentice Hall, 1973.

[14] Parks, "Liapunov Redesign of Model Reference Adaptive Control Systems", IEEE Trans. on AC, Vol. AC-11, No. 3, July, 1966.

[15] W. Rudin, "Principles of Mathematical Analysis", McGraw Hill Book Company, 1976.

[16] A.P. Morgan and K.S. Narendra, "On the Uniform Asymptotic Stability of Certain Linear Nonautonomous Differential Equations". SIAM J. of Control and Optimization, Vol. 15, 1977.

[17] B.D.O. Anderson, "Exponential Stability of Linear Equations Arising in Adaptive Identification", IEEE Trans. on AC, Vol. AC-22, pp.83-88, 1977.

[18] O. Khatib, "Dynamic Control of Manipulators in Operational Space", Sixth IFTOMM Congress on Theory of Machines and Mechanisms, New Delhi, Dec. 15-20 1983.

Authorized licensed use limited to: National Taiwan Univ of Science and Technology. Downloaded on February 16,2026 at 11:32:44 UTC from IEEE Xplore. Restrictions apply.