6/15 前言
7/15 文獻回顧，動機
8/15 單輪，動力學
9/15 全向動力學
10/15 MATLAB模擬
11/15 結果
12/15 結論，未來展望
1/15 paper 完成

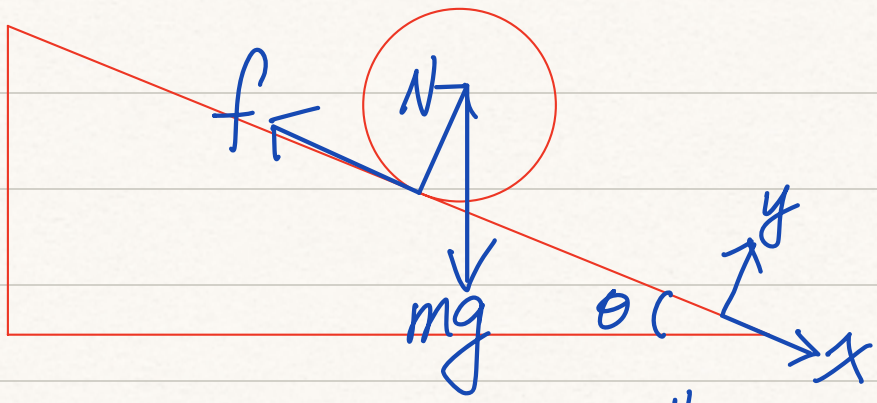

$$mg\sin\theta - \mu mg\cos\theta = m\ddot{x}$$

$$\ddot{x} = g(\sin\theta - \mu\cos\theta)$$

$$\dot{x} = g(\sin\theta - \mu\cos\theta)t$$

$$x(t) = \frac{1}{2}g(\sin\theta - \mu\cos\theta)t^2$$

19–21. The drum has a mass of 70 kg, a radius of 300 mm, and radius of gyration $k_O = 125$ mm. If the coefficients of static and kinetic friction at A are $\mu_s = 0.4$ and $\mu_k = 0.3$, respectively, determine the drum's angular velocity 2 s after it is released from rest. Take $\theta = 30°$.

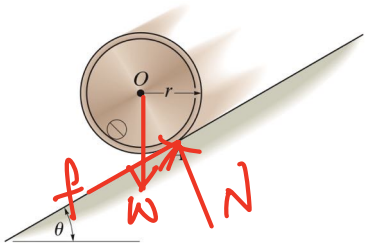

Prob. 19–21

$\Sigma M_{A\circlearrowright}$ $70(9.81)(\sin 30°)(0.3)\times 2$

$= (70\times 0.125^2 + 70\times 0.3^2)\omega$

$\omega = 27.9$

$F\downarrow +$ $70(9.81)(\sin 30°)\times 2 - f\times 2$

$= 70\times(27.9)(0.3)$

$f = 50.79N$

$N = 70\times 9.81\times\cos 30° = 594.7N$

$F_{max} = 0.4\times 594.7 = 237.87N > 50.79N$

17–109. The semicircular disk having a mass of 10 kg is rotating at $\omega = 4$ rad/s at the instant $\theta = 60°$. If the coefficient of static friction at A is $\mu_s = 0.5$, determine if the disk slips at this instant.

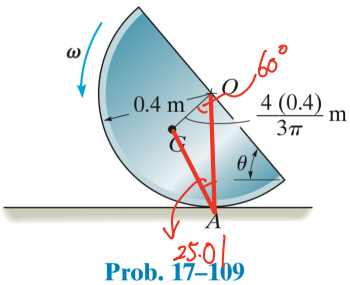

Prob. 17–109

•17–93. The semicircular disk having a mass of 10 kg is rotating at $\omega = 4$ rad/s at the instant $\theta = 60°$. If the coefficient of static friction at A is $\mu_s = 0.5$, determine if the disk slips at this instant.

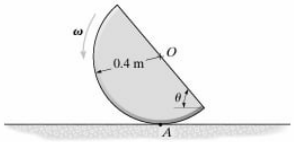

Equations of Motion: The mass moment of inertia of the semicircular disk about its center of mass is given by $I_G = \frac{1}{2}(10)(0.4^2) - 10(0.1698^2) = 0.5118$ kg·m². From the geometry, $r_{G/A} = \sqrt{0.1698^2 + 0.4^2 - 2(0.1698)(0.4)\cos 60°} = 0.3477$ m Also, using law of sines, $\frac{\sin\theta}{0.1698} = \frac{\sin 60°}{0.3477}$, $\theta = 25.01°$. Applying Eq. 17–16, we have

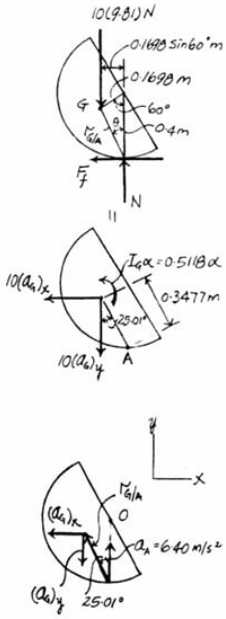

$\circlearrowleft + \Sigma M_A = \Sigma(M_k)_A;$ $\quad 10(9.81)(0.1698\sin 60°) = 0.5118\alpha$

$+ 10(a_G)_x\cos 25.01°(0.3477)$

$+ 10(a_G)_y\sin 25.01°(0.3477)$ **(1)**

$\overset{+}{\leftarrow}\Sigma F_x = m(a_G)_x;$ $\quad F_f = 10(a_G)_x$ **(2)**

$+\uparrow F_y = m(a_G)_y;$ $\quad N - 10(9.81) = -10(a_G)_y$ **(3)**

Kinematics: Assume that the semicircular disk does not slip at A, then $(a_A)_x = 0$. Here, $\mathbf{r}_{G/A} = \{-0.3477\sin 25.01°\mathbf{i} + 0.3477\cos 25.01°\mathbf{j}\}$ m $= \{-0.1470\mathbf{i} + 0.3151\mathbf{j}\}$ m. Applying Eq. 16–18, we have

$$\mathbf{a}_G = \mathbf{a}_A + \alpha\times\mathbf{r}_{G/A} - \omega^2\mathbf{r}_{G/A}$$

$$-(a_G)_x\mathbf{i} - (a_G)_y\mathbf{j} = 6.40\mathbf{j} + \alpha\mathbf{k}\times(-0.1470\mathbf{i} + 0.3151\mathbf{j}) - 4^2(-0.1470\mathbf{i} + 0.3151\mathbf{j})$$

$$-(a_G)_x\mathbf{i} - (a_G)_y\mathbf{j} = (2.3523 - 0.3151\alpha)\mathbf{i} + (1.3581 - 0.1470\alpha)\mathbf{j}$$

Equating **i** and **j** components, we have

$$(a_G)_x = 0.3151\alpha - 2.3523 \quad \textbf{(4)}$$

$$(a_G)_y = 0.1470\alpha - 1.3581 \quad \textbf{(5)}$$

Solving Eqs. (1), (2), (3), (4), and (5) yields:

$$\alpha = 13.85\ \text{rad/s}^2 \qquad (a_G)_x = 2.012\ \text{m/s}^2 \qquad (a_G)_y = 0.6779\ \text{m/s}^2$$

$$F_f = 20.12\ \text{N} \qquad N = 91.32\ \text{N}$$

Since $F_f < (F_f)_{max} = \mu_s N = 0.5(91.32) = 45.66$ N, then the semicircular **disk does not slip.** **Ans.**

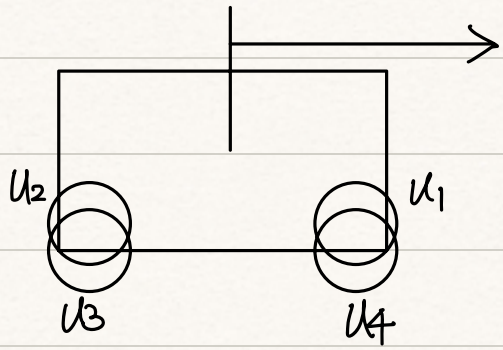

$$\boxed{\tau_m = R \cdot u_i}$$

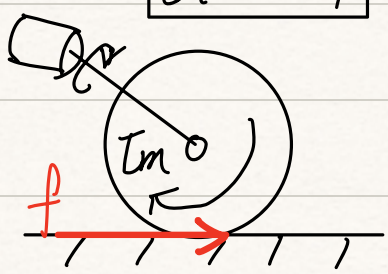

non-slip condition

$$\boxed{m\ddot{x} + b\dot{x} = \sum u_i = \sum \frac{1}{R}\tau_{mi}}$$

$$m\ddot{\eta} + b\eta = \frac{1}{R}\sum \tau_{mi}$$

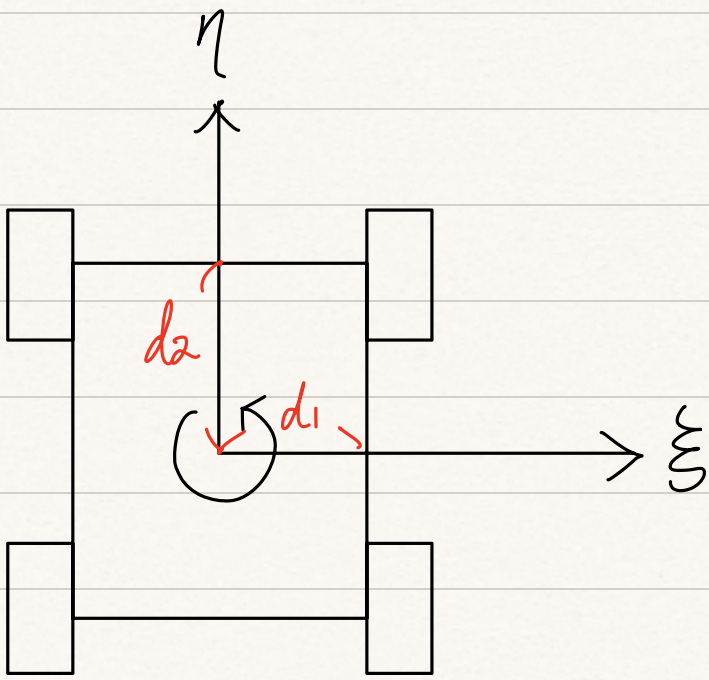

$$\begin{bmatrix} \dot{x} \\ \dot{y} \\ \dot{\phi}_z \end{bmatrix} = \begin{bmatrix} -1 & 1 & -1 & 1 \\ 1 & 1 & 1 & 1 \\ \frac{1}{d_1+d_2} & \frac{-1}{d_1+d_2} & \frac{-1}{d_1+d_2} & \frac{1}{d_1+d_2} \end{bmatrix} \begin{bmatrix} \dot{\theta}_1 \\ \dot{\theta}_2 \\ \dot{\theta}_3 \\ \dot{\theta}_4 \end{bmatrix}$$

$$\tau = M_1\ddot{\theta} + D_\theta\dot{\theta} \tag{2.48}$$

其中，$\dot{\theta} = \begin{bmatrix} \dot{\theta}_{1x} & \dot{\theta}_{2x} & \dot{\theta}_{3x} & \dot{\theta}_{4x} \end{bmatrix}^T$ 為各輪轉速,$\tau = \begin{bmatrix} \tau_1 & \tau_2 & \tau_3 & \tau_4 \end{bmatrix}^T$ 為作用於各輪上的扭矩，M_1 為 4×4 矩陣。

$$M_1 = \begin{bmatrix} a+b+J_w & -b & a-b & b \\ -b & a+b+J_w & b & a-b \\ a-b & b & a+b+J_w & -b \\ b & a-b & -b & a+b+J_w \end{bmatrix} \in R^{4x4} \tag{2.49}$$

$$a = \frac{m_1R^2}{8}, \quad b = \frac{J_zR^2}{16(d_1+d_2)^2}, \quad J_w = \frac{m_2R^2}{2} \tag{2.50}$$

其中，m_2 為車輪 (包含大輪與小輪) 質量。

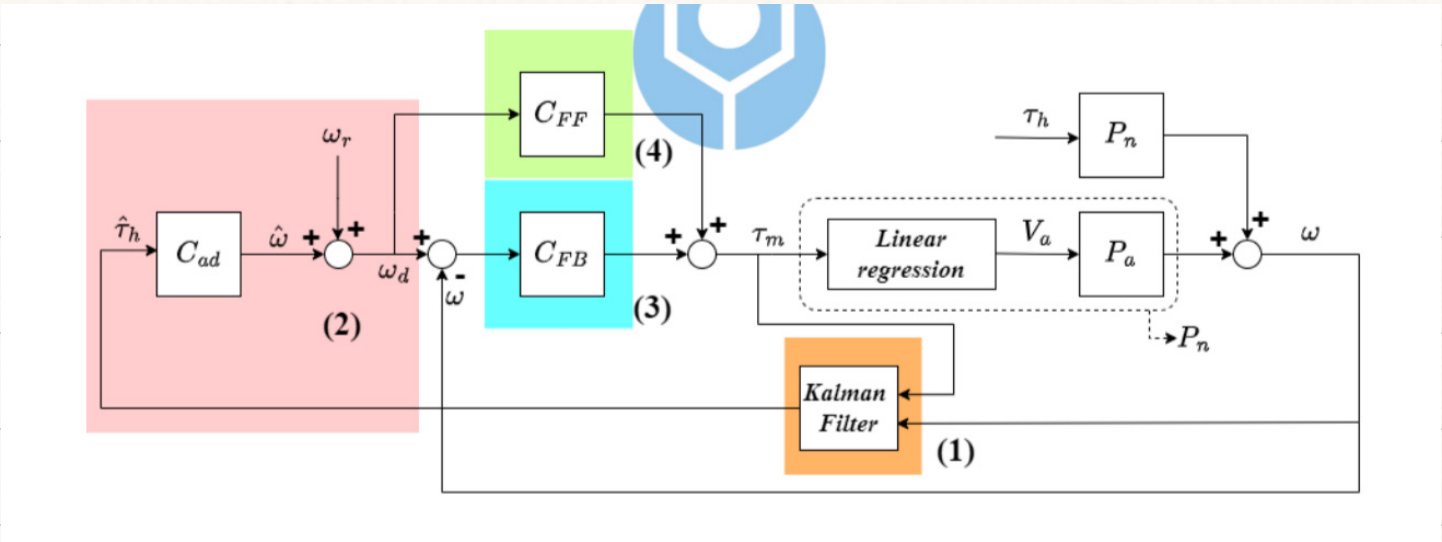

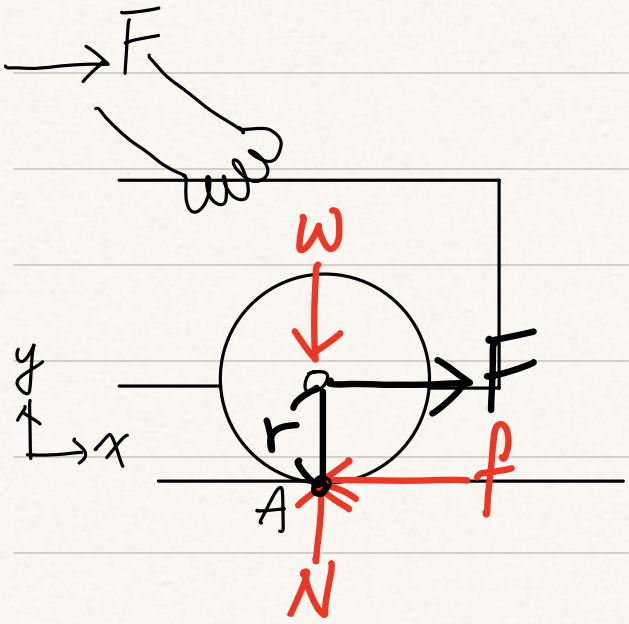

μ_s = 靜摩擦

$N = W$

$f_{max} = \mu_s \cdot N$

if $f < f_{max}$ 不滑動，只滾動

$\Sigma M_A \circlearrowright$, $\cancel{I\omega_0} + \int \Sigma M_A dt = I\omega_f$

$r \cdot F \cdot t = I \cdot \omega_f$

$\Sigma F_x \rightarrow$, $\cancel{mv_0} + \int \Sigma F dt = mv_f$

$(F - f) \cdot t = m \cdot r \cdot \omega_f$

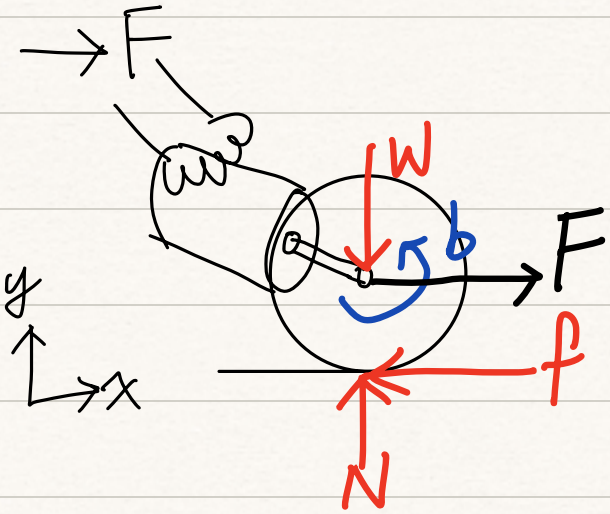

b 為馬達扭矩

$r \cdot F \cdot t - b \cdot t = I \cdot \omega_f$

$(F - f)\, t = m \cdot r \cdot \omega_f$

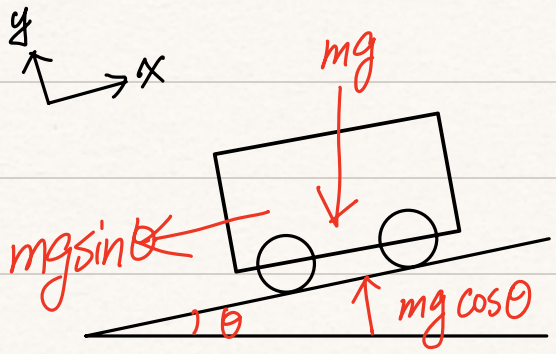
y
x
mg
mgsinθ
θ
mg cosθ

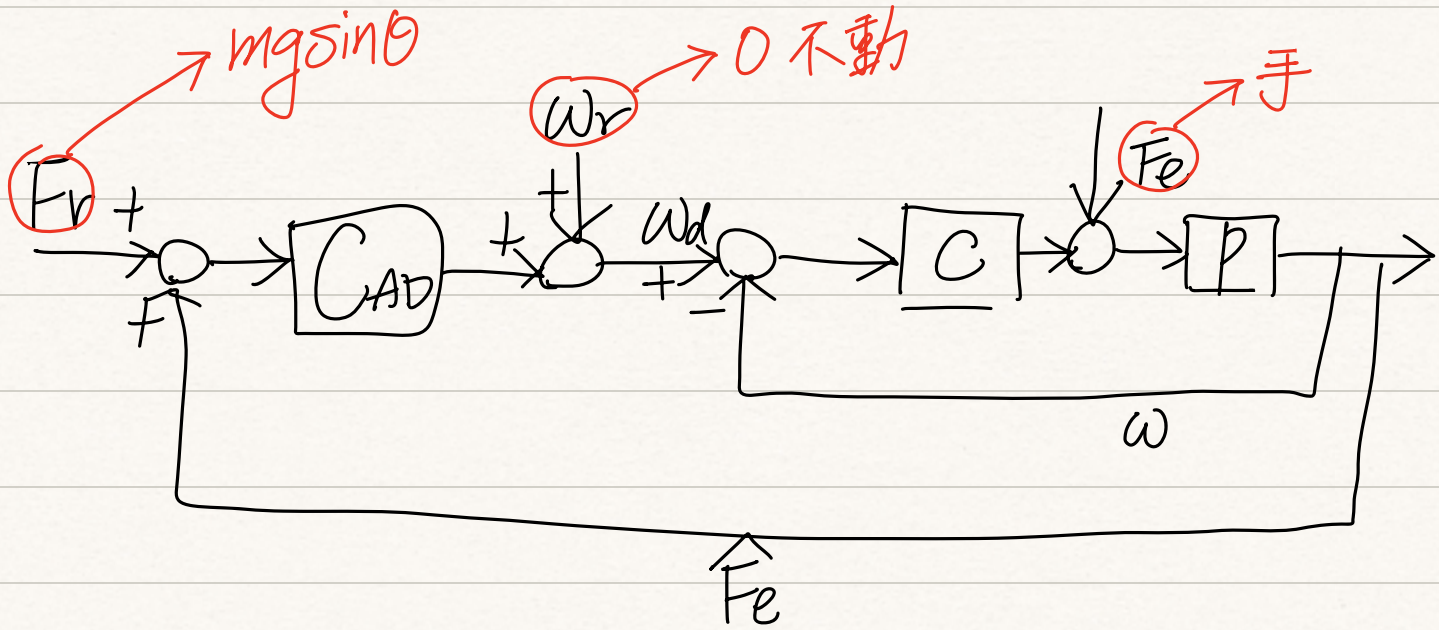
mgsinθ
Fr
+
+
CAD
+
ωr
0 不動
+
ωd
+
−
C
Fe
手
P
ω
Fe

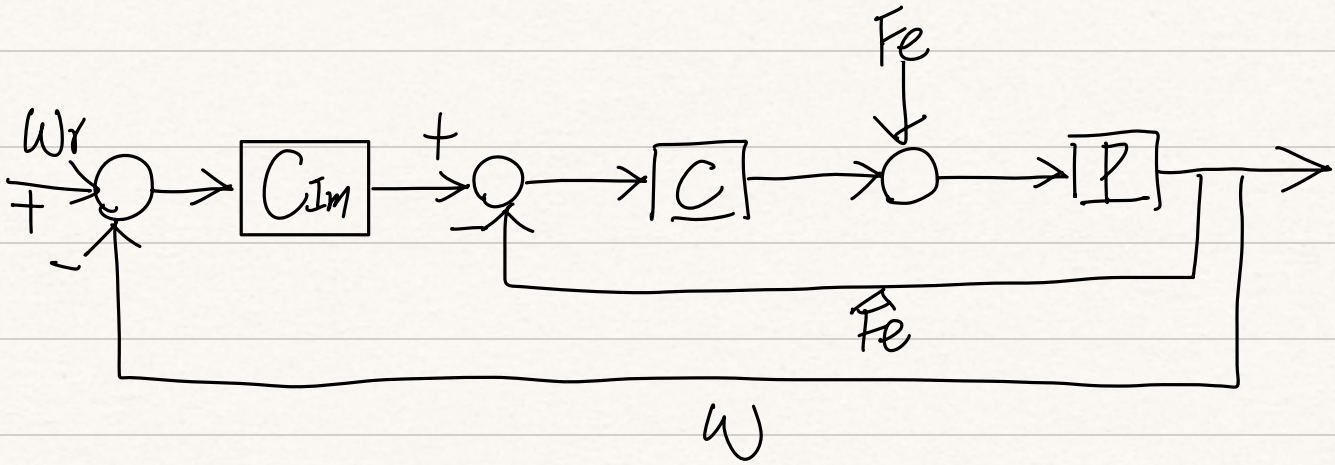
ωr
+
−
CIm
+
−
C
Fe
P
Fe
ω