ASSOCIATED DRAWINGS

ABR25-001784	PCB OUTLINE
ABR25-001785	ASSEMBLY DRAWING

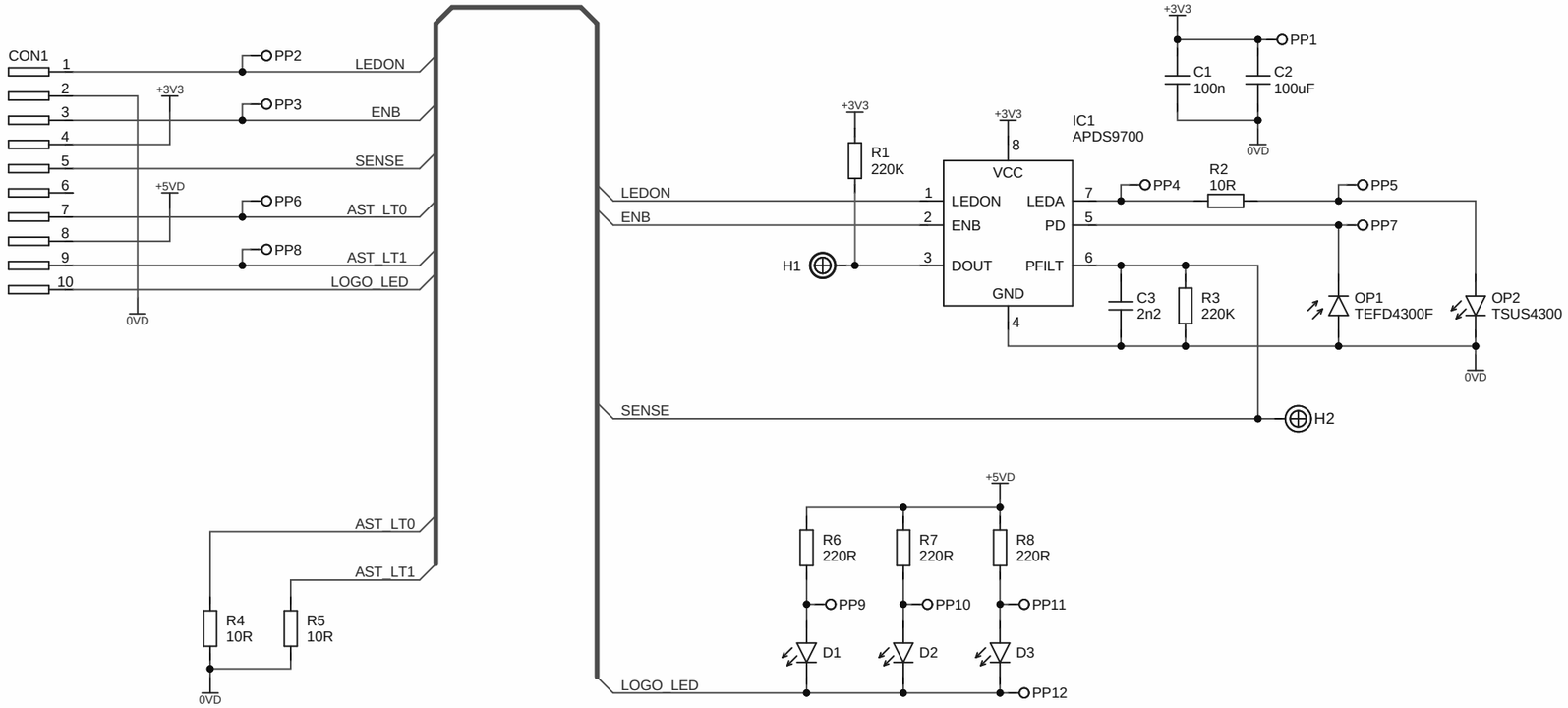

MECH1
PCB OUTLINE
ABR25-001784

MECH2
SOLDER 0.7MM LEAD FREE
AWT25-000254

MECH3
SOLDER PASTE LEAD FREE
AWT25-000250

MECH4
ADHESIVE LABEL
ABR25-001017

MECH5
SCREW NO2 X 6MM
ABR20-003275

MECH6
LED CARRIER
ABR20-003647

FD1 FD2 FD3

H3 H4 H5

0VD

ECO No.	ALTERATION		DATE

PRODUCT: XT SERIES

TITLE: EYEBROW BOARD

ENG: T.R. LOWE	DATE: 03/11/22	1 OF 1
DRG NO: ABR25-001786		ISSUE:AA

Copyright © 2022 Avery Berkel. All rights reserved worldwide. No part of this document may be reproduced, transmitted, transcribed, stored in any retrieval system or translated into any language or computer language, in any form, or by any means electronic, mechanical, optical, chemical, manual or otherwise, without the prior written permission of Avery Berkel, Foundry Lane, Smethwick, West Midlands, B66 2LP.