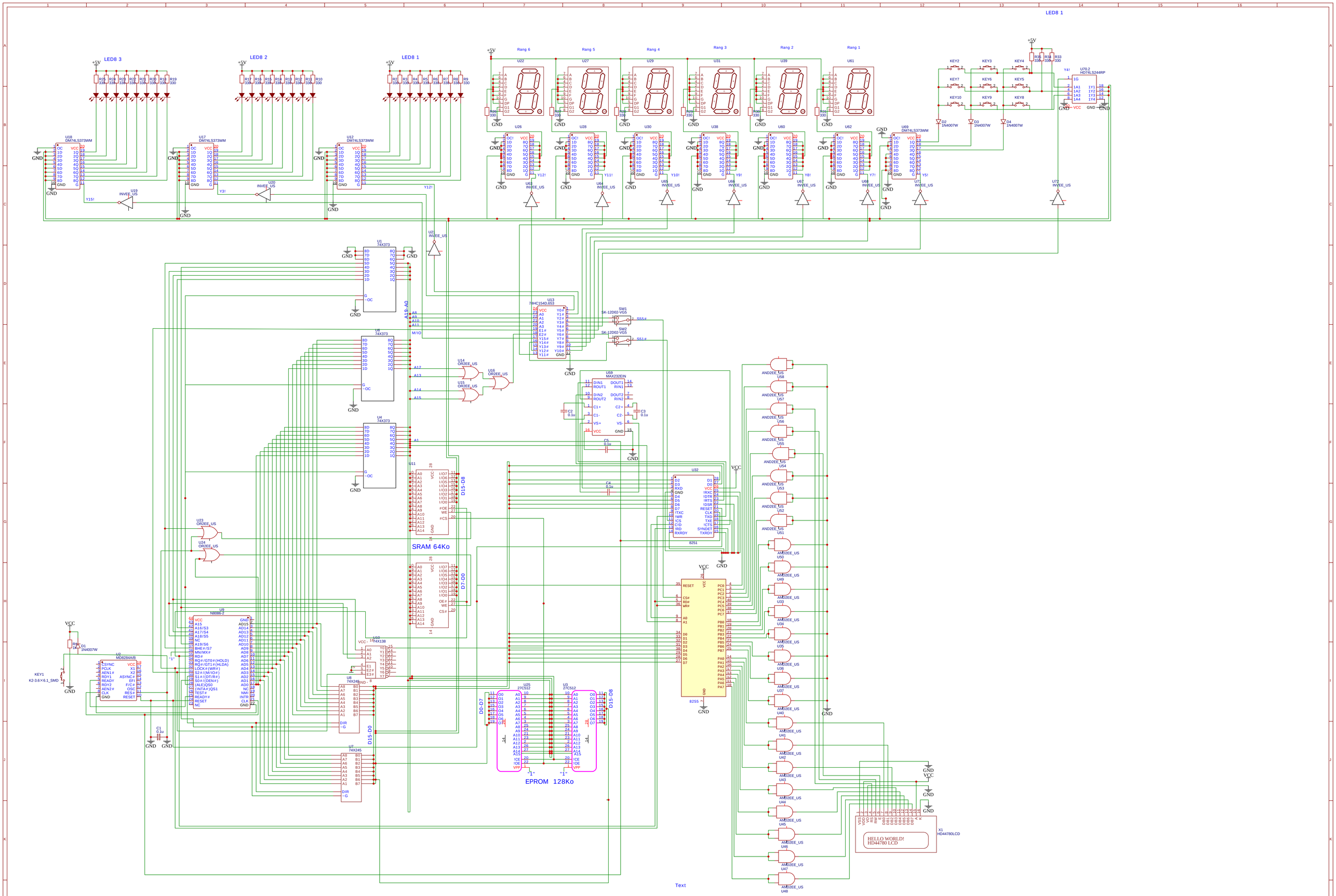


| TITLE: | PROIECT PMD | REV: 1.0 |
|---|---|---|
| EasyEDA | Company: UPT | Sheet: 1/1 |
| | Date: 2023-10-15 Drawn By: Sodinca Iulia Cristiana | |