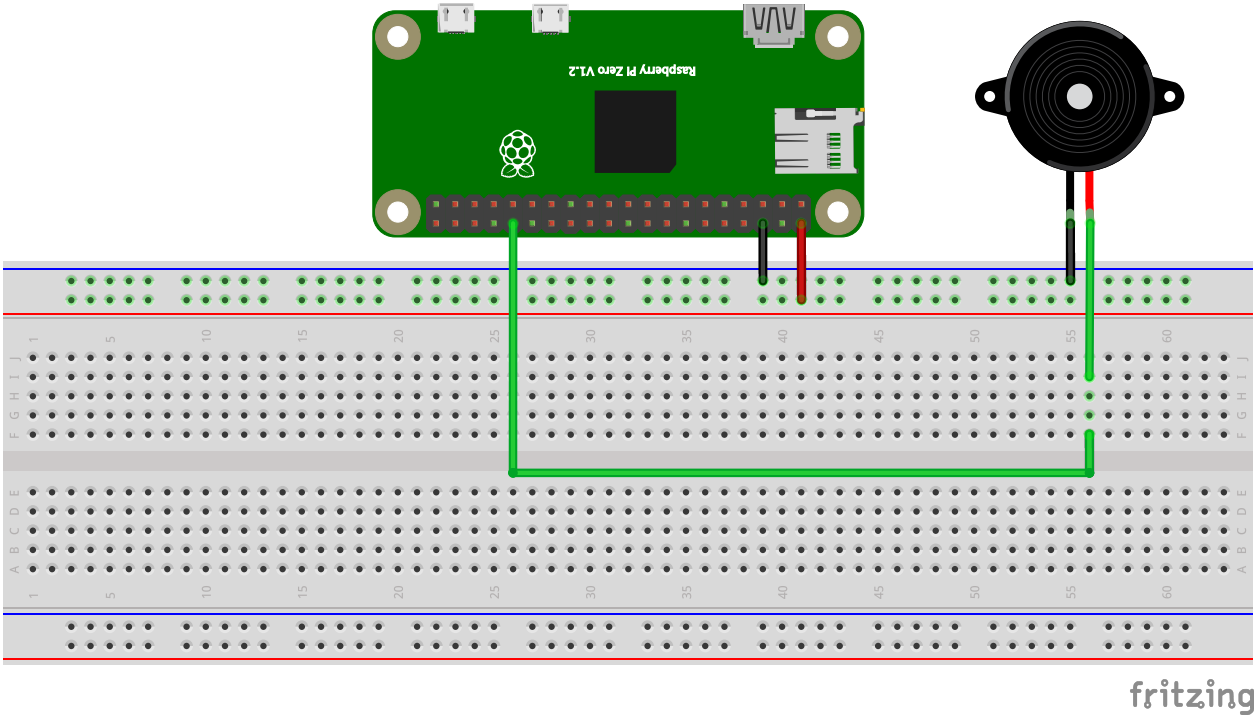
Raspberry Pi Zero V1.2
fritzing