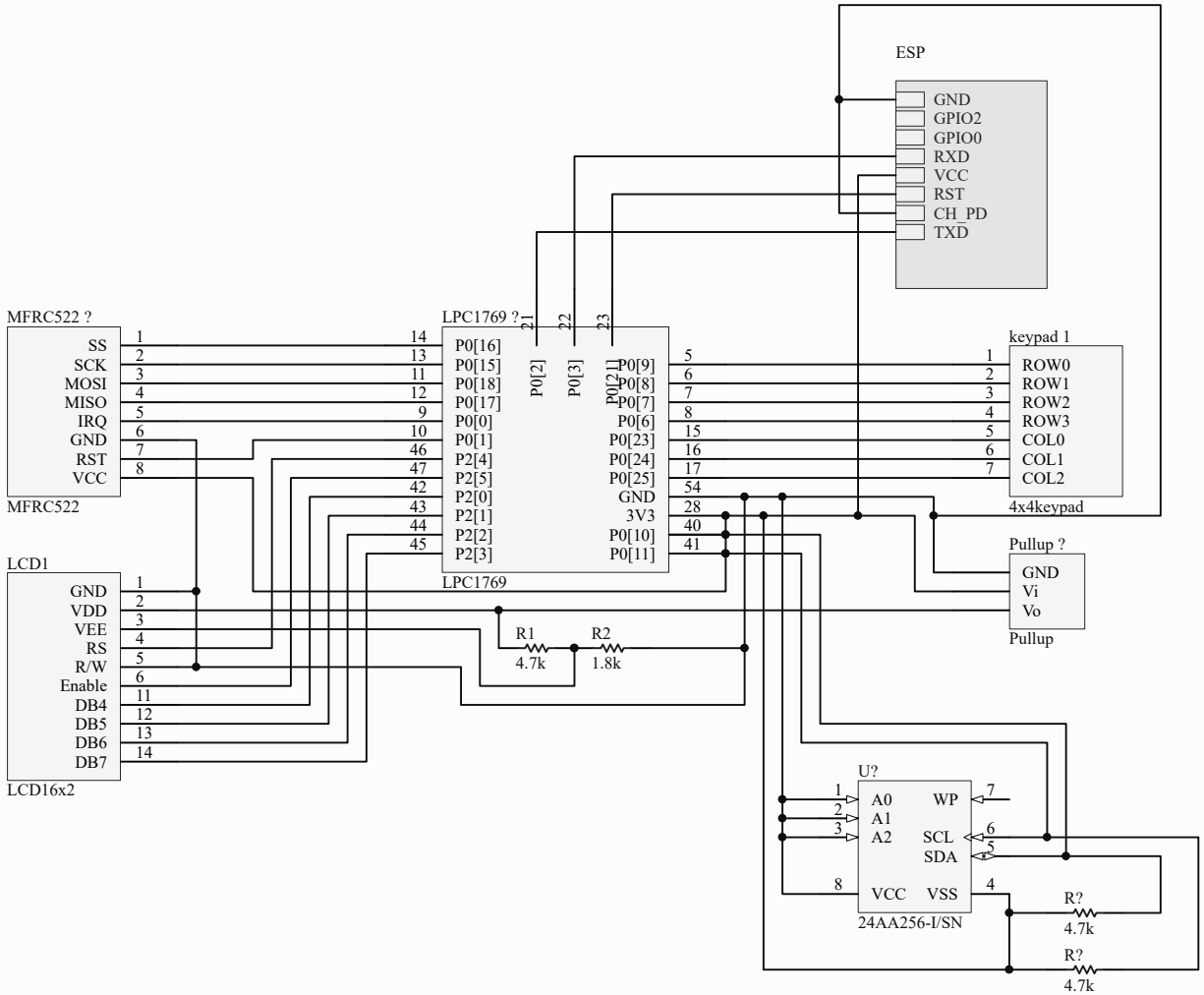

Title		
Size A4	Number	Revision
Date: 22/07/2019		Sheet of
File: C:\Users\..\esquema eletrico.SchDoc		Drawn By: