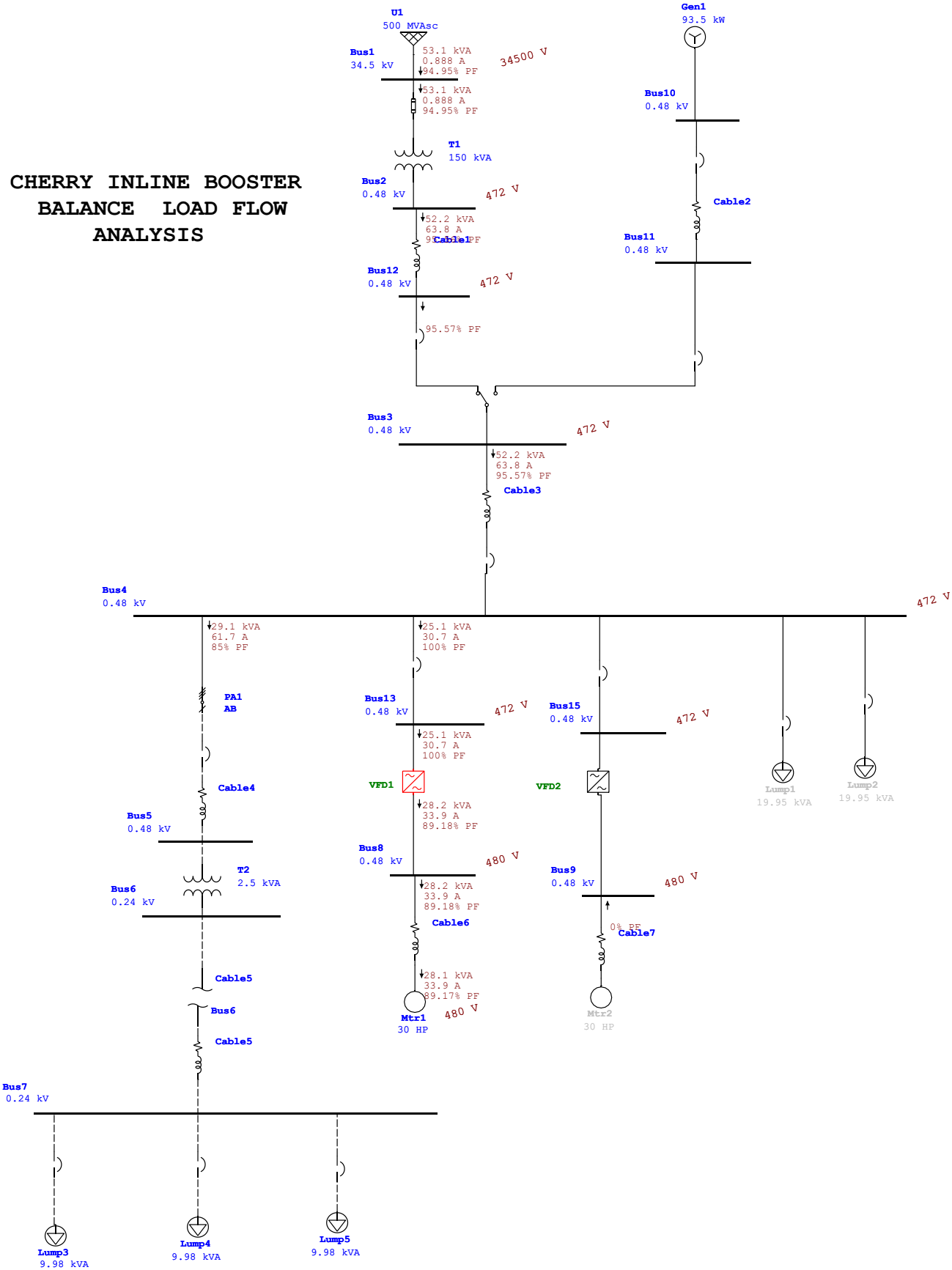CHERRY INLINE BOOSTER BALANCE LOAD FLOW ANALYSIS