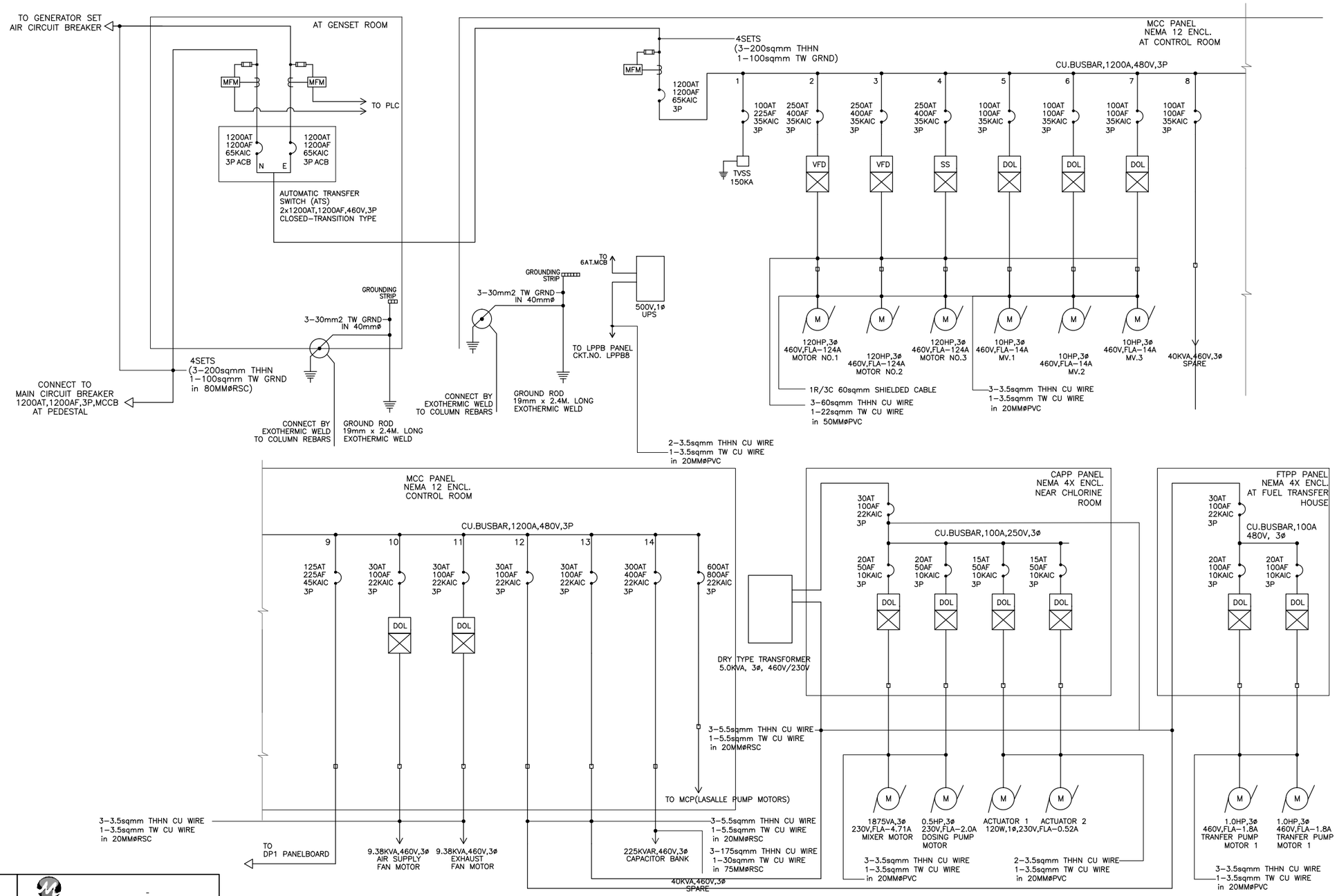

1 EE-02

SINGLE LINE DIAGRAM

Maynilad	Maynilad
CONFORME:	CONFORME:
HEAD, Division (End User)	HEAD, Department (End User)

DRAWN	SURVEYED	DESIGNED	CHECKED

REVISION

REV	DATE	BY	APPROVED BY	

Checked & Certified :

ENGR. MARITES R. PANGILINAN
Professional Electrical Engineer

PROFESSION :
PTR :
REGISTRATION NO. :
DATE ISSUED :
TIN :
PLACE ISSUED :

GHD
11/F Alphaland Southgate Tower 2258 Chino Roces Ave corner EDSA Makati City 1232 Philippines
T 63 2 479 5600 F 63 2 479 5601
E mnlmail@ghd.com W www.ghd.com

Approved :

Project Manager

ALTERNATIVE POWER SOLUTIONS, INC.
1424 LIBRADA AVELINO STREET PANDACAN MANILA
TEL: (02)-4242251 TELEFAX: 82-42-0281

DESIGN UNIT

DESIGN SECTION

ENGR. MARITES R. PANGILINAN
VP-OPERATIONS

AS-BUILT DRAWING

PROJECT TITLE: CONSULTANCY SERVICES FOR THE ENGINEERING, PROCUREMENT AND CONSTRUCTION MANAGEMENT FOR THE LA MESA TREATMENT PLANT 2 PROCESS IMPROVEMENT WORKS

LOCATION: MAYNILAD, AYALA ALABANG R1

SHEET CONTENT: RESERVOIR 1 PUMPING STATION POWER SYSTEM LINE DIAGRAM

SCALE:	CONTRACT NO.	SHEET NO.	REV.
	OP18REFCS03-RIP-EE02-SD	01 OF 01	00