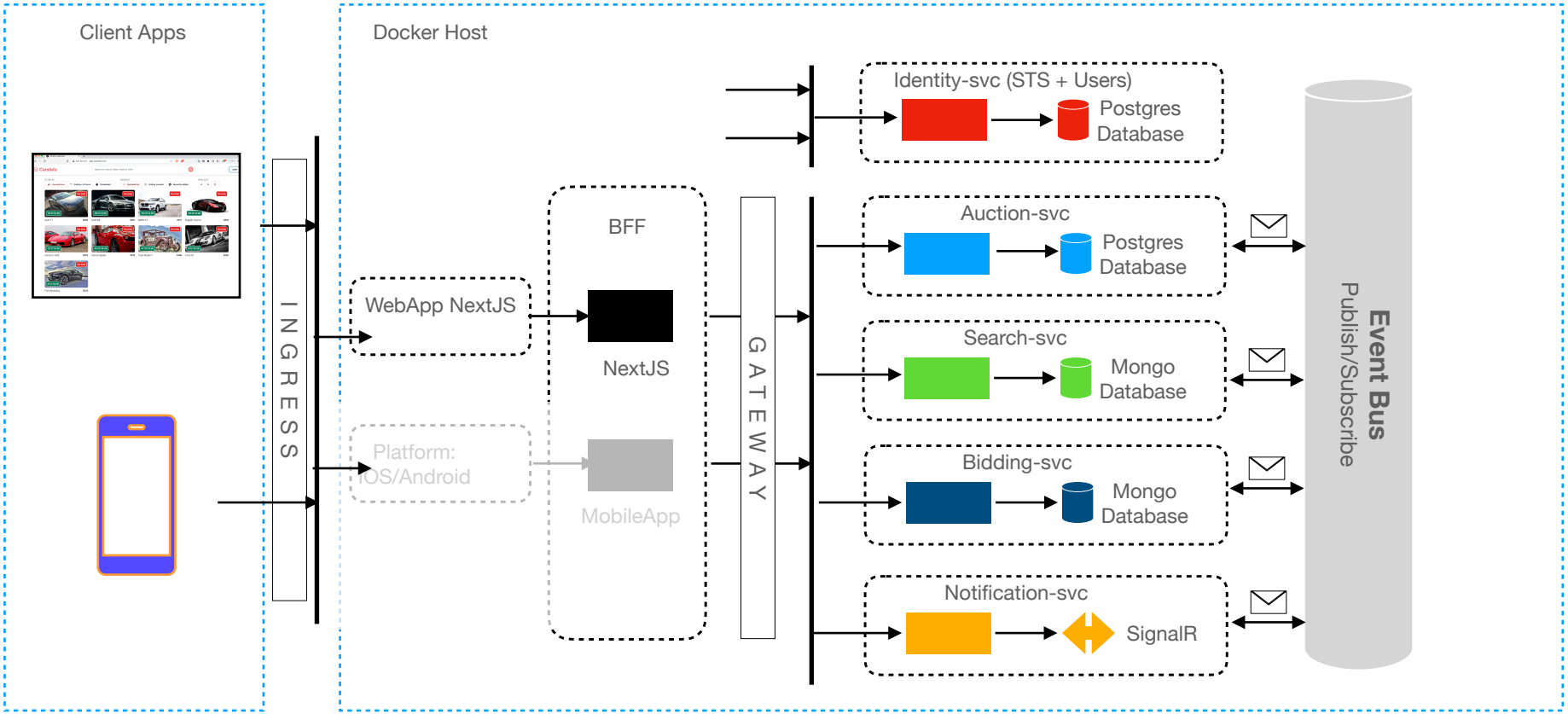AuctionApp architecture